4RF

Aprisa SR+

# Product Description

January 2014

Version 1.1.6

## Copyright

Copyright © 2014 4RF Limited. All rights reserved.

This document is protected by copyright belonging to 4RF Limited and may not be reproduced or republished in whole or part in any form without the prior written permission of 4RF Limited.

## Trademarks

Aprisa and the 4RF logo are trademarks of 4RF Limited.

Windows is a registered trademark of Microsoft Corporation in the United States and other countries. Java and all Java-related trademarks are trademarks or registered trademarks of Sun Microsystems, Inc. in the United States and other countries. All other marks are the property of their respective owners.

## Disclaimer

Although every precaution has been taken preparing this information, 4RF Limited assumes no liability for errors and omissions, or any damages resulting from use of this information. This document or the equipment may change, without notice, in the interests of improving the product.

## RoHS and WEEE compliance

The Aprisa SR+ is fully compliant with the European Commission's RoHS (Restriction of Certain Hazardous Substances in Electrical and Electronic Equipment) and WEEE (Waste Electrical and Electronic Equipment) environmental directives.

### Restriction of hazardous substances (RoHS)

The RoHS Directive prohibits the sale in the European Union of electronic equipment containing these hazardous substances: lead, cadmium, mercury, hexavalent chromium, polybrominated biphenyls (PBBs), and polybrominated diphenyl ethers (PBDEs).

4RF has worked with its component suppliers to ensure compliance with the RoHS Directive which came into effect on the 1st July 2006.

### End-of-life recycling programme (WEEE)

The WEEE Directive concerns the recovery, reuse, and recycling of electronic and electrical equipment. Under the Directive, used equipment must be marked, collected separately, and disposed of properly.

4RF has instigated a programme to manage the reuse, recycling, and recovery of waste in an environmentally safe manner using processes that comply with the WEEE Directive (EU Waste Electrical and Electronic Equipment 2002/96/EC).

4RF invites questions from customers and partners on its environmental programmes and compliance with the European Commission's Directives (sales@4RF.com).

## Compliance General

The Aprisa SR+ radio predominantly operates within frequency bands that require a site license be issued by the radio regulatory authority with jurisdiction over the territory in which the equipment is being operated.

It is the responsibility of the user, before operating the equipment, to ensure that where required the appropriate license has been granted and all conditions attendant to that license have been met.

Changes or modifications not approved by the party responsible for compliance could void the user's authority to operate the equipment.

Equipment authorizations sought by 4RF are based on the Aprisa SR+ radio equipment being installed at a fixed restricted access location and operated in point-to-multipoint or point-to-point mode within the environmental profile defined by EN 300 019, Class 3.4. Operation outside these criteria may invalidate the authorizations and / or license conditions.

The term 'Radio' with reference to the Aprisa SR+ User Manual, is a generic term for one end station of a point-to-multipoint Aprisa SR+ network and does not confer any rights to connect to any public network or to operate the equipment within any territory.

## Compliance European Telecommunications Standards Institute

The Aprisa SR+ radio is designed to comply with the European Telecommunications Standards Institute (ETSI) specifications as follows:

| | 12.5 kHz and 25 kHz Channel |
|---|---|
| Radio performance | EN 300 113-2 |
| EMC | EN 301 489 Parts 1 & 5 |
| Environmental | EN 300 019, Class 3.4<br>Ingress Protection code IP51 |
| Safety | EN 60950-1:2006<br>Class 1 div 2 for hazardous locations |

| **Frequency band** | **Channel size** | **Power input** | **Notified body** |
|---|---|---|---|
| 135-175 MHz | 12.5 kHz, 25 kHz | 12 VDC | |
| 320-400 MHz | 12.5 kHz, 25 kHz | 12 VDC | |
| 400-470 MHz | 12.5 kHz, 25 kHz | 12 VDC | |
| 450-520 MHz | 12.5 kHz, 25 kHz | 12 VDC | |

## Compliance Federal Communications Commission

The Aprisa SR+ radio is designed to comply with the Federal Communications Commission (FCC) specifications as follows:

| | |
|---|---|
| Radio | 47CFR part 24, part 90 and part 101 Private Land Mobile Radio Services |
| EMC | 47CFR part 15 Radio Frequency Devices, EN 301 489 Parts 1 & 4 |
| Environmental | EN 300 019, Class 3.4<br>Ingress Protection code IP51 |
| Safety | EN 60950-1:2006<br>Class 1 div 2 for hazardous locations |

| Frequency Band* | Channel size | Power input | Authorization | FCC ID |
|---|---|---|---|---|
| 135-175 MHz | 12.5 kHz, 25 kHz | 12 VDC | Part 90 | Pending |
| 216-220 MHz | 12.5 kHz, 25 kHz, 50 kHz | 12 VDC | Part 90 | Pending |
| 400-470 MHz | 12.5 kHz, 25 kHz | 12 VDC | Part 90 | UIPSQ400M131 |
| 450-520 MHz | 12.5 kHz, 25 kHz | 12 VDC | Part 90 | Pending |
| 896-902 MHz | 12.5 kHz, 25 kHz | 12 VDC | Part 90 | Pending |
| 896-902 MHz | 12.5 kHz, 25 kHz, 50 kHz | 12 VDC | Part 24 | Pending |
| 928-960 MHz | 12.5 kHz, 25 kHz, 50 kHz | 12 VDC | Part 24, 90 and Part 101 | Pending |

NOTE: This equipment has been tested and found to comply with the limits for a Class A digital device, pursuant to part 15 of the FCC Rules. These limits are designed to provide reasonable protection against harmful interference when the equipment is operated in a commercial environment. This equipment generates, uses, and can radiate radio frequency energy and, if not installed and used in accordance with the instruction manual, may cause harmful interference to radio communications. Operation of this equipment in a residential area is likely to cause harmful interference in which case the user will be required to correct the interference at his own expense.

* The frequency bands is a generic term, it is not an indication of the exact frequencies approved by FCC.

## Compliance Industry Canada

The Aprisa SR+ radio is designed to comply with Industry Canada (IC) specifications as follows:

| | |
|---|---|
| Radio | RSS-119 / RSS-134 |
| EMC | This Class A digital apparatus complies with Canadian standard ICES-003.<br>Cet appareil numérique de la classe A est conforme à la norme NMB-003 du Canada. |
| Environmental | EN 300 019, Class 3.4<br>Ingress Protection code IP51 |
| Safety | EN 60950-1:2006<br>Class 1 div 2 for hazardous locations |

| Frequency Band* | Channel size | Power input | Authorization | IC ID |
|---|---|---|---|---|
| 135-175 MHz | 12.5 kHz, 25 kHz | 12 VDC | RSS-119 | Pending |
| 215-240 MHz | 12.5 kHz, 25 kHz | 12 VDC | RSS-119 | Pending |
| 400-470 MHz | 12.5 kHz, 25 kHz | 12 VDC | RSS-119 | 6772A-SQ400M131 |
| 896-902 MHz | 12.5 kHz, 25 kHz | 12 VDC | RSS-119 | Pending |
| 896-902 MHz | 12.5 kHz, 25 kHz, 50 kHz | 12 VDC | RSS-134 | Pending |
| 928-960 MHz | 12.5 kHz, 25 kHz, 50 kHz | 12 VDC | RSS-119 and RSS-134 | Pending |

* The frequency bands is a generic term, it is not an indication of the exact frequencies approved by IC.

## Compliance Hazardous Locations Notice

This product is suitable for use in Class 1, Division 2, Groups A - D hazardous locations or non-hazardous locations.

The following text is printed on the Aprisa SR+ fascia:

WARNING: EXPLOSION HAZARD - Do not connect or disconnect while circuits are live unless area is known to be non-hazardous.

The following text is printed on the Aprisa SR+ for product where the end user is in Canada:

AVERTISSEMENT: RISQUE D'EXPLOSION - Ne pas brancher ou débrancher tant que le circuit est sous tension, à moins qu'il ne s'agisse d'un emplacement non dangereux.

# RF Exposure Warning

**WARNING:**

The installer and / or user of Aprisa SR+ radios shall ensure that a separation distance as given in the following table is maintained between the main axis of the terminal's antenna and the body of the user or nearby persons.

Minimum separation distances given are based on the maximum values of the following methodologies:

1. Maximum Permissible Exposure non-occupational limit (B or general public) of 47 CFR 1.1310 and the methodology of FCC's OST/OET Bulletin number 65.
2. Reference levels as given in Annex III, European Directive on the limitation of exposure of the general public to electromagnetic fields (0 Hz to 300 GHz) (1999/519/EC). These distances will ensure indirect compliance with the requirements of EN 50385:2002.

| Frequency (MHz) | Maximum Power (dBm) Note 1 | Maximum Antenna Gain (dBi) | Minimum Separation Distance (m) |
|---|---|---|---|
| 135 | + 37 | 15 | 2.5 |
| 175 | + 37 | 15 | 2.5 |
| 215 | + 37 | 15 | 2.5 |
| 216.5 | + 37 | 15 | 2.5 |
| 217.5 | + 33 | 15 | 2.5 |
| 240 | + 37 | 15 | 2.5 |
| 320 | + 37 | 15 | 2.5 |
| 400 | + 37 | 15 | 2.5 |
| 450 | + 37 | 15 | 2.5 |
| 470 | + 37 | 15 | 2.5 |
| 520 | + 37 | 15 | 2.5 |
| 896 | + 37 | 28 | 7.5 |
| 902 | + 37 | 28 | 7.5 |
| 928 | + 37 | 28 | 7.5 |
| 960 | + 37 | 28 | 7.5 |

Note 1: The Peak Envelope Power (PEP) at maximum set power level is +41 dBm.

# Contents


**1. Introduction ..... 11**

The 4RF Aprisa SR+ Radio ..... 11
Product Overview ..... 12
Network Coverage and Capacity ..... 12
Automatic Registration ..... 12
Remote Messaging ..... 12
Product Features ..... 13
Functions ..... 13
Performance ..... 14
Usability ..... 14
System Gain vs FEC Coding ..... 15
Architecture ..... 16
Security ..... 17
Interfaces ..... 18
Antenna Interface ..... 18
Ethernet Interface ..... 18
RS-232 Interface ..... 18
USB Interfaces ..... 18
Protect Interface ..... 18
Alarms Interface ..... 18
Mounting ..... 19
DIN Rail Mounting ..... 19
Rack Shelf Mounting ..... 21
Wall Mounting ..... 22

**2. Product Options ..... 23**

Interface Ports ..... 23
Protected Station ..... 24
Protected Ports ..... 24
Operation ..... 25
Switch Over ..... 25
Configuration Management ..... 25
Data Driven Protected Station ..... 26
Operation ..... 26
Duplexer Kits ..... 27
UHF Duplexer Kits ..... 27
VHF Duplexer Kits ..... 28
USB RS-232 Serial Port ..... 29
USB RS-232 operation ..... 29

**3. Specifications ..... 30**

RF Specifications ..... 30
- Frequency Bands ..... 30
- Channel Sizes ..... 31
- Receiver ..... 34
- Transmitter ..... 37
- Modem ..... 37
- Data Payload Security ..... 37

Interface Specifications ..... 38
- Ethernet Interface ..... 38
- RS-232 Asynchronous Interface ..... 39
- Hardware Alarms Interface ..... 40
- Protection Switch Specifications ..... 40

Power Specifications ..... 41
- Power Supply ..... 41
- Power Consumption ..... 42
- Power Dissipation ..... 42

General Specifications ..... 43
- Environmental ..... 43
- Mechanical ..... 43
- Compliance ..... 44

**4. Management ..... 45**

SuperVisor ..... 45
- Viewing the Aprisa SR+ Terminal Settings ..... 46
- Configuring the Aprisa SR+ Terminal Details ..... 47
- Configuring the Aprisa SR+ RF Network Details ..... 47
- Configuring the Aprisa SR+ Radio Settings ..... 48

Command Line Interface ..... 49

SNMP ..... 49

LED Display Panel ..... 50
- Normal Operation ..... 50
- Single Radio Software Upgrade ..... 51
- Network Software Upgrade ..... 51
- Test Mode ..... 51

**5. Applications ..... 52**

Basic point-to-multipoint application ..... 52

Advanced point-to-multipoint application with repeater ..... 53

Multi-interface point-to-multipoint application ..... 54

Multi-hop Daisy Chain Repeaters in LBS Mode Application ..... 55

Pseudo Peer to Peer using Base-Repeater Application ..... 56

**6. Product Architecture ..... 57**

Product Operation ..... 57
Physical Layer ..... 57
Data Link Layer / MAC layer ..... 57
Channel Access ..... 57
Hop by Hop Transmission ..... 58
Adaptive Coding Modulation ..... 59
Network Layer ..... 60
Packet Routing ..... 60
Static IP Router ..... 61
Bridge Mode with VLAN Aware ..... 63
VLAN Bridge Mode Description ..... 64
Avoiding Narrow Band Radio Traffic Overloading ..... 66
Product Architecture ..... 68
Aprisa SR+ Radio Block Diagram ..... 69
Aprisa SR+ Protected Station Block Diagram ..... 69

**7. Contact Us ..... 70**

# 1. Introduction

## The 4RF Aprisa SR+ Radio

The 4RF Aprisa SR+ is a point-to-multipoint digital radio providing secure narrowband wireless data connectivity for SCADA, infrastructure and telemetry applications.

The radios carry a combination of serial packet data and Ethernet data between the base station, repeater stations and remote stations.

The Aprisa SR+ is configurable as a point-to-multipoint base station, a remote station or a repeater station.

# Product Overview

## Network Coverage and Capacity

The Aprisa SR+ has a typical link range of up to 120 km, however, geographic features, such as hills, mountains, trees and foliage, or other path obstructions, such as buildings, will limit radio coverage. Additionally, geography may reduce network capacity at the edge of the network where errors may occur and require retransmission. However, the Aprisa SR+ uses 10W output power and Forward Error Correction (FEC) which greatly improves the sensitivity and system gain performance of the radio resulting in less retries and minimal reduction in capacity.

Ultimately, the overall performance of any specific network will be defined by a range of factors including the RF output power, the modulation used and its related receiver sensitivity, the geographic location, the number of remote stations in the base station coverage area and the traffic profile across the network. Effective network design will distribute the total number of remote stations across the available base stations to ensure optimal geographic coverage and network capacity.

One base station can register and operate with up to 500 remote / repeater stations.

The practical limit of remote / repeater stations that can operate with one base station is determined by a range of factors including the number of services, the packet sizes, the protocols used, the message types and network timeouts.

## Automatic Registration

On start-up, the remote station transmits a registration message to the base stations which responds with a registration response. This allows the base station to record the details of all the remote stations active in the network.

If a remote station cannot register with the base station after multiple attempts (RF LED flashing red) within 10 minutes, it will automatically reboot. If a remote station has registered with the base station but then loses communication, it will automatically reboot within 2 minutes.

## Remote Messaging

There are two message types in the Aprisa SR+ network, broadcast messages and unicast messages. Broadcast messages are transmitted by the base station to the remote stations and unicast messages are transmitted by the remote station to the base station. These messages are commonly referred to as uplink (unicast remote to base) and downlink (broadcast base to remote).

All remotes within the coverage area will receive broadcast messages and pass them on to either the Ethernet or serial interface. The RTU determines if the message is intended for it and will accept it or discard it.

# Product Features

## Functions

- Point-to-point (PTP) or Point-to-multipoint (PMP) operation
- Licensed frequency bands:

| | |
|---|---|
| VHF 135 | 135-175 MHz |
| VHF 220 | 216-220 MHz |
| UHF 320 | 320-400 MHz |
| UHF 400 | 400-470 MHz |
| UHF 450 | 450-520 MHz |
| UHF 896 | 896-902 MHz |
| UHF 928 | 928-960 MHz |

- Channel sizes – software selectable:

  12.5 kHz
  25 kHz
  50 kHz

- Adaptive Coding Modulation (ACM): QPSK to 64 QAM
- Half duplex or full duplex RF operation (full duplex channel access for point-to-multipoint available in a future software release)
- Ethernet data interface and RS-232 asynchronous multiple port options
- Software selectable dual / single antenna port options (dual antenna port for external duplexers or filters)
- Data encryption and authentication using 128,192 and 256 bit AES and CCM security standards
- Terminal server operation for transporting RS-232 traffic over IP or Ethernet
- IEEE 802.1Q VLAN support with single and double VLAN tagged and add/remove VLAN manipulation to adapt to the appropriate RTU / PLCs
- QoS supports using IEEE 802.1p VLAN priority bits to prioritize and handle the VLAN / traffic types
- L2/3/4 filtering for security and avoiding narrow band radio network overload
- L3 Router mode with standard static IP route for simple routing network integration
- L2 Bridge mode with VLAN aware for standard Industrial LAN integration
- Ethernet header and IP/TCP/UDP ROCH header compression to increase the narrow band radio capacity
- Ethernet and serial payload compression to increase the narrow band radio capacity
- Pseudo peer to peer communication between remote stations through base-repeater or repeater stations
- SuperVisor web management support for element and sub-network (base-repeater-remotes) management
- SNMPv1/2/3 & encryption MIB supports for 4RF SNMP manager or third party SNMP agent network management
- SNTP for accurate wide radio network time and date
- Build-configuration / flexibility of serial and Ethernet interface ports (3+1, 2+2, 4+0)
- Radio and user interface redundancy (provided with Aprisa SR+ Protected Station)
- Protected Station fully hot swappable and monitored hot standby
- Transparent to all common SCADA protocols; e.g. Modbus, IEC 60870-5-101/104, DNP3 or similar
- Complies with international standards, including ETSI, FCC, IC, EMC, safety and environmental standards

## Performance

- Typical deployment of 30 remote stations from one base station with a practical limit of a few hundred remote stations
- Long distance operation
- High transmit power
- Low noise receiver
- Forward Error Correction
- Electronic tuning over the frequency band
- Thermal management for high power over a wide temperature range

## Usability

- Configuration / diagnostics via front panel Management Port USB interface, Ethernet interface
- Built-in webserver SuperVisor with full configuration, diagnostics and monitoring functionality, including remote station configuration / diagnostics over the radio link
- LED display for on-site diagnostics
- Dedicated alarm port
- Software upgrade and diagnostic reporting via the host port USB flash drive
- Over-the-air software distribution and upgrades
- Simple installation with integrated mounting holes for wall, DIN rail and rack shelf mounting

## System Gain vs FEC Coding

This table shows the relationship between modulation, FEC coding, system gain, capacity and coverage.

- Maximum FEC coding results in the highest system gain, the best coverage but the least capacity
- Minimum FEC coding results in lower system gain, lower coverage but higher capacity
- No FEC coding results in the lowest system gain, the lowest coverage but the highest capacity

This table defines the modulation order based on gross capacity:

| Modulation | FEC Coding | Capacity |
|---|---|---|
| QPSK (High Gain) | Max Coded FEC | Minimum |
| QPSK (Low Gain) | Min Coded FEC | |
| 16QAM (High Gain) | Max Coded FEC | |
| QPSK | No FEC | |
| 16QAM (Low Gain) | Min Coded FEC | |
| 16QAM | No FEC | |
| 64QAM (High Gain) | Max Coded FEC | |
| 64QAM (Low Gain) | Min Coded FEC | Maximum |

This table defines the modulation order based on receiver sensitivity:

| Modulation | FEC Coding | Coverage |
|---|---|---|
| QPSK (High Gain) | Max Coded FEC | Maximum |
| QPSK (Low Gain) | Min Coded FEC | |
| 16QAM (High Gain) | Max Coded FEC | |
| QPSK | No FEC | |
| 16QAM (Low Gain) | Min Coded FEC | |
| 64QAM (High Gain) | Max Coded FEC | |
| 16QAM | No FEC | |
| 64QAM (Low Gain) | Min Coded FEC | Minimum |

# Architecture

The Aprisa SR+ Architecture is based around a layered TCP/IP protocol stack:

- Physical
  Proprietary wireless
  RS-232 and Ethernet interfaces
- Link
  Proprietary wireless (channel access, ARQ, segmentation)
  VLAN aware Ethernet bridge
- Network
  Standard IP
  Proprietary automatic radio routing table population algorithm
- Transport
  TCP, UDP
- Application
  HTTPS web management access through base station with proprietary management application software including management of remote stations over the radio link
  SNMPv1/2/3 for network management application software

# Security

The Aprisa SR+ provides security features to implement the key recommendations for industrial control systems. The security provided builds upon the best in class from multiple standards bodies, including:

- IEC/TR 62443 (TC65) 'Industrial Communications Networks – Network and System Security'
- IEC/TS 62351 (TC57) 'Power System Control and Associated Communications – Data and Communication Security'
- FIPS PUB 197, NIST SP 800-38C, IETF RFC3394, RFC3610 and IEEE P1711/P1689/P1685

The security features implemented are:

- Data encryption

  Counter Mode Encryption (CTR) using Advanced Encryption Standard (AES) 128, 192, 258 bit, based on FIPS PUB 197 AES encryption (using Rijndael version 3.0)

- Data authentication

  NIST SP 800-38C Cipher Block Chaining Message Authentication Code (CBC-MAC) based on RFC 3610 using Advanced Encryption Standard (AES)

- Data payload security

  CCM Counter with CBC-MAC integrity (NIST special publication 800-38C)

- Secured management interface protects configuration
- L2 / L3 / L4 Address filtering enables traffic source authorization
- Proprietary physical layer protocol and modified MAC layer protocol based on standardized IEEE 802.15.4
- Licensed radio spectrum provides recourse against interference
- SNMPv3 with Encryption for NMS secure access
- Secure USB software upgrade
- Key Encryption Key (KEK) based on RFC 3394, for secure Over The Air Re-keying (OTAR) of encryption keys
- User privilege allows the accessibility control of the different radio network users and the user permissions

# Interfaces

## Antenna Interface

- 2 x TNC, 50 ohm, female connectors

  Single or dual antenna ports (with or without the use of external duplexer/filter)

## Ethernet Interface

- 2, 3 or 4 ports 10/100 base-T Ethernet layer 2 switch using RJ45

  Used for Ethernet user traffic and radio sub-network management.

## RS-232 Interface

- 2, 1 or 0 RS-232 asynchronous ports using RJ45 connector
- Optional 1x RS-232 asynchronous port using USB host port with USB to RS-232 converter

  Used for RS-232 asynchronous user traffic only.

## USB Interfaces

- 1 x Management port using USB micro type B connector

  Used for product configuration with the Command Line Interface (CLI).
- 1 x Host port using USB standard type A connector

  Used for software upgrade and diagnostic reporting.

## Protect Interface

- 1x Protect interface port

  Used for the Protected Station operation.

## Alarms Interface

- 1x Alarm port using RJ45 connector

  Used to provide 2 x hardware alarm inputs and 2 x hardware alarm outputs

# Mounting

The Aprisa SR+ has four threaded holes (M4) in the enclosure base and two holes (5.2 mm) through the enclosure for mounting.

Mounting options include:

- DIN rail mounting with the Aprisa SR+ DIN Rail Mounting Bracket
- Rack shelf mounting
- Wall mounting
- Outdoor enclosure mounting

## DIN Rail Mounting

The Aprisa SR+ has an optional accessory to enable the radio to mount on a standard DIN rail:

| Part Number | Part Description |
|---|---|
| APSB-MBRK-DIN | 4RF SR+ Acc, Mounting, Bracket, DIN Rail |

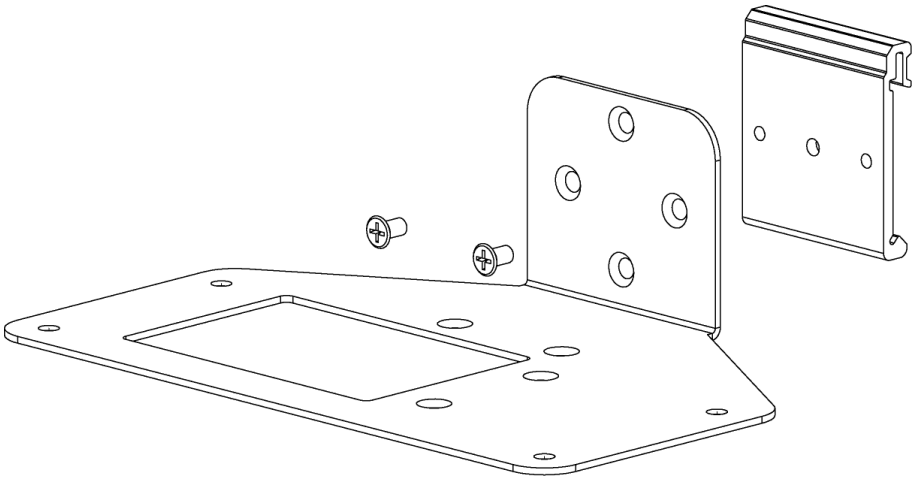

The Aprisa SR+ DIN rail mounting bracket can be mounted in four positions on a horizontal DIN rail:

- Vertical Mount (vertical enclosure perpendicular to the mount)
- Horizontal Mount (horizontal enclosure perpendicular to the mount)
- Flat Vertical Mount (vertical enclosure parallel to the mount)
- Flat Horizontal Mount (horizontal enclosure parallel to the mount)

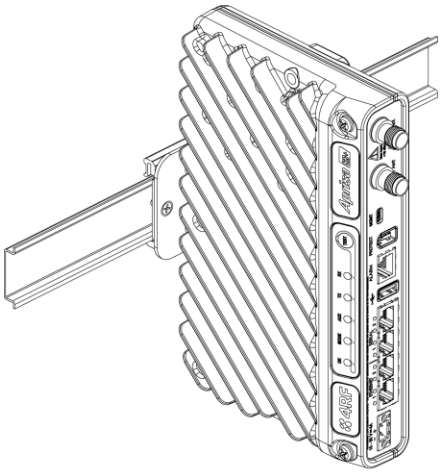

Vertical Mount

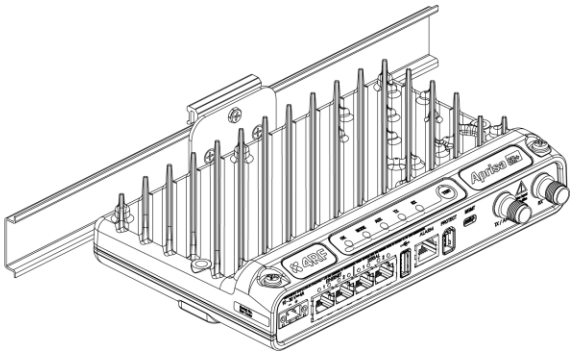

Horizontal Mount

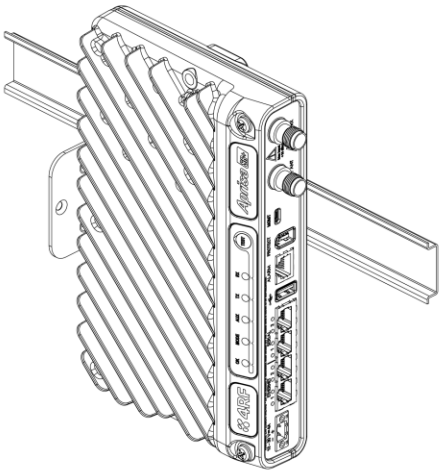

Flat Vertical Mount

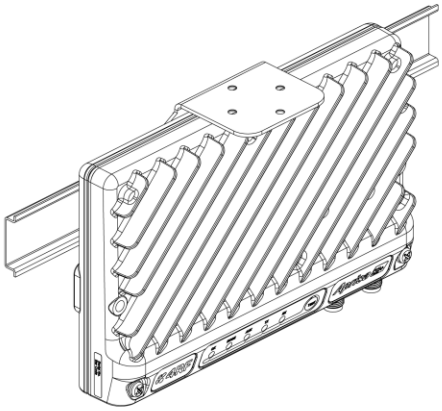

Flat Horizontal Mount

# Rack Shelf Mounting

The Aprisa SR+ can be mounted on a rack mount shelf using the four M4 threaded holes in the Aprisa SR+ enclosure base. The following picture shows two Aprisa SR+ radios mounted on 1 RU rack mount shelf.

| Part Number | Part Description |
|---|---|
| APSB-MR19-X1U | 4RF SR+ Acc, Mounting, 19" Rack Mount Shelf, 1U |

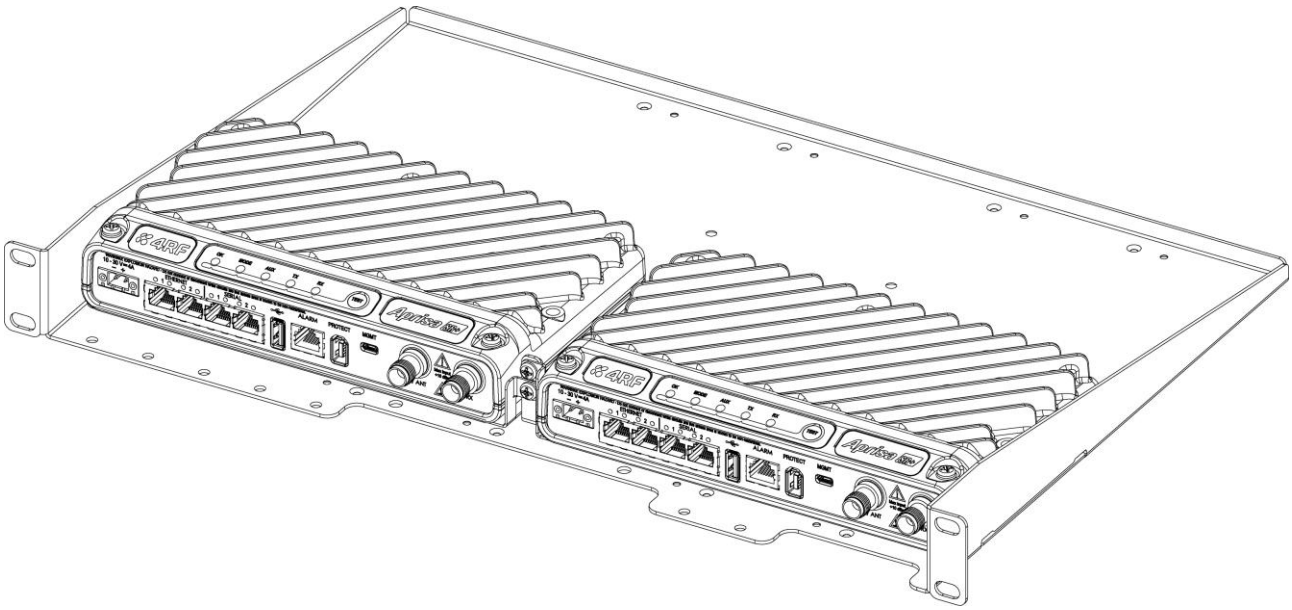

**WARNING:**

If the Aprisa SR+ is operated in an environment where the ambient temperature exceeds 50°C, the Aprisa SR+ convection air flow over the heat sinks must be considered.

# Wall Mounting

The Aprisa SR+ can be mounted on a wall using the two holes through the enclosure (5.2 mm diameter). Typically, M5 screws longer than 35 mm would be used.

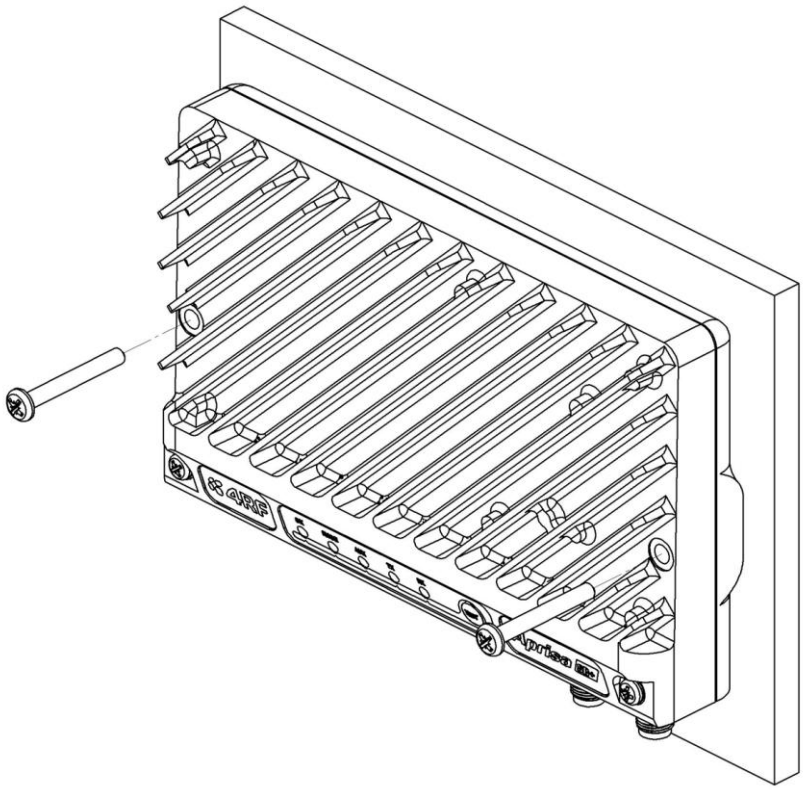

# 2. Product Options

## Interface Ports

The standard Aprisa SR+ provides multiple interface port options for combinations of Ethernet and RS-232 serial. The product shown below is the two Ethernet ports plus two RS-232 serial ports.

| Interface Port Option | Part Number |
|---|---|
| 4 Ethernet ports and no RS-232 serial ports | APSQ-N400-SSC-HD-40-ENAA |
| 3 Ethernet ports and 1 RS-232 serial port | APSQ-N400-SSC-HD-31-ENAA |
| 2 Ethernet ports and 2 RS-232 serial ports | APSQ-N400-SSC-HD-22-ENAA |

# Protected Station

The Aprisa SR+ Protected Station is full monitored hot-standby and fully hot-swappable.

The Aprisa SR+ Protected Station provides radio and user interface protection for Aprisa SR+ radios when configured as a base station. The RF ports and interface ports from the active Aprisa SR+ radio are switched to the standby radio if there is a failure in the active radio.

Option Example

| Part Number | Part Description |
|---|---|
| APSQ-R400-SSC-HD-22-ENAA | 4RF SR+, PS, 400-470 MHz, SSC, Half Duplex, 2E2S, EN, AA |

The Aprisa SR+ Protected Station is comprised of an Aprisa SR+ Protection Switch and two standard Aprisa SR+ radios mounted in a 2U rack mounting chassis.

The Aprisa SR+ Protected Station is full monitored hot-standby and fully hot-swappable. All interfaces (RF, data, etc.) are continually monitored on both the active and standby radio to ensure correct operation. The standby radio can be replaced without impacting traffic flow on the active radio.

The Aprisa SR+ radios can be any of the currently available Aprisa SR+ radio frequency bands, channel sizes or interface port options.

The Aprisa SR+ Protected Station can operate as a base station, repeater station or remote station. The protection behaviour and switching criteria between the active and standby radios is identical for the three configurations.

By default, the Aprisa SR+ Protected Station is configured with the left hand radio (A) designated as the primary radio and the right hand radio (B) designated as the secondary radio.

Each radio is configured with its own unique IP and MAC address and the address of the partner radio.

On power-up, the primary radio will assume the active role and the secondary radio will assume the standby role. If, for some reason, only one radio is powered on it will automatically assume the active role.

## Protected Ports

The protected ports are located on the protected station front panel. Switching occurs between the active radio ports and the standby radio ports based on the switching criteria described below.

The protected ports include:

- Antenna ports ANT/TX and RX (if dual antenna ports used)
- Ethernet ports 1 and 2
- Serial port

## Operation

In hot-standby normal operation, the active radio carries all RS-232 serial and Ethernet traffic over the radio link and the standby radio transmit is on with its transmitter connected to an internal load. Both radios are continually monitored for correct operation including the transmitter and receiver and alarms are raised if an event occurs.

The active radio sends regular 'keep alive' messages to the standby radio to indicate it is operating correctly. In the event of a failure on the active radio, the RF link and user interface traffic is automatically switched to the standby radio.

The failed radio can then be replaced in the field without interrupting user traffic (see Aprisa SR+ User Manual).

## Switch Over

The switch over to the standby radio can be initiated automatically, on fault detection, or manually via the Hardware Manual Lock switch on the Protection Switch or the Software Manual Lock from SuperVisor.

Additionally, it is possible to switch over the radios remotely without visiting the station site, via the remote control connector on the front of the Protection Switch.

## Configuration Management

The Primary and Secondary radios are managed with the embedded web-based management tool, SuperVisor, by using either the Primary or Secondary IP address. Configuration changes in one of the radios will automatically be reflected in the partner radio.

To ensure all remote stations are registered to the correct (active) base station, changes to the Network Table are automatically synchronized from the active radio to the standby radio. The Network Table is only visible on the active radio. This synchronization does not occur if the Hardware Manual Lock is active.

# Data Driven Protected Station

The Aprisa SR+ Data Driven Protected Station provides radio and RS-232 serial port user interface protection for Aprisa SR+ radios.

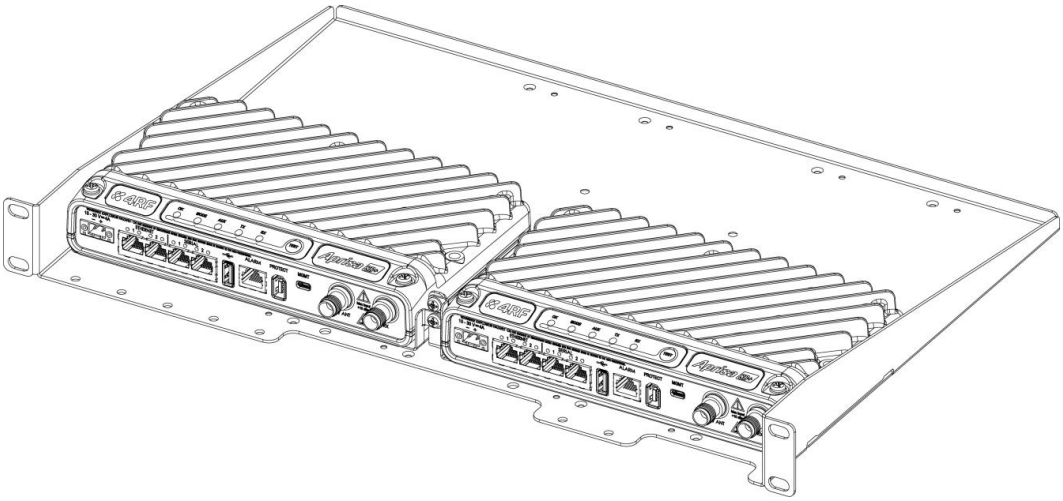

Option Example

| Part Number | Part Description |
|---|---|
| APSQ-D400-SSC-HD-22-ENAA | 4RF SR+, PD, 400-470 MHz, SSC, Half Duplex, 2E2S, EN, AA |

The Aprisa SR+ Data Driven Protected Station shown is comprised of two standard Aprisa SR+ dual antenna port option radios and two external duplexers mounted on 19" rack mounting shelves (as shown above).

The Aprisa SR+ radios can be any of the currently available Aprisa SR+ radio frequency bands, channel sizes or single / dual antenna port options.

By default, the Aprisa SR+ Data Driven Protected Station is configured with the left hand radio (A) designated as the primary radio and the right hand radio (B) designated as the secondary radio.

Each radio is configured with its own unique IP and MAC address and the address of the partner radio.

On power-up, the primary radio will assume the active role and the secondary radio will assume the standby role. If, for some reason, only one radio is powered on it will automatically assume the active role.

## Operation

In normal operation, the active radio carries all RS-232 serial and Ethernet traffic over the radio link and the standby radio is unused with its transmitter turned off. Both radios are continually monitored for correct operation and alarms are raised if an event occurs.

Both the active and standby radios send regular ‘keep alive’ messages to each other to indicate if they are operating correctly. In the event of a failure on the active radio, the RF link and user interface traffic is automatically switched to the standby radio.

The failed radio can then be replaced in the field without interrupting user traffic.

# Duplexer Kits

The Aprisa SR+ product range contains Duplexer Kit accessories for use with the Dual Antenna port Aprisa SR+ radios.

## UHF Duplexer Kits

The Aprisa SR+ UHF Duplexer Kit contains:

- 1x 1U 19" rack mount shelf with duplexer mounting brackets and screws
- 1x Duplexer
- 2x TNC to SMA right angle 590mm cables

| Part Number | Part Number |
|---|---|
| APSB-KDUP-300-A1 | 4RF SR+ Acc, Kit, Duplexer, 320-400 MHz, s 5 MHz, p 0.5 MHz, ext |
| APSB-KDUP-400-B1 | 4RF SR+ Acc, Kit, Duplexer, 400-470 MHz, s 5 MHz, p 0.5 MHz, ext |
| APSB-KDUP-450-M0 | 4RF SR+ Acc, Kit, Duplexer, 450-520 MHz, s 5 MHz, p 0.5 MHz, ext |
| APSB-KDUP-900-G2 | 4RF SR+ Acc, Kit, Duplexer, 928-960 MHz, s 9 MHz, p 1 MHz, ext |
| APSB-KDUP-900-G4 | 4RF SR+ Acc, Kit, Duplexer, 928-960 MHz, s 3.6 MHz, p 0.5 MHz, ext |

# VHF Duplexer Kits

The Aprisa SR+ VHF Duplexer Kit contains:

- 1x 1U 19" rack mount shelf with duplexer mounting brackets and screws
- 1xVHF Procom Duplexer
- 1x VHF Filter, Procom BPF 2/3 HX-150, 145 to 174 MHz
- 1x N type male to N type male 325mm
- 2x TNC to N type male right angle 590mm cable

| Part Number | Part Number |
|---|---|
| APSB-KDUP-VHF-R2 | 4RF SR+ Acc, Kit, Duplexer, 152-175 MHz, s4-6 MHz, p100 kHz, High |
| APSB-KDUP-VHF-R3 | 4RF SR+ Acc, Kit, Duplexer, 152-175 MHz, s6-8 MHz, p100 kHz, High |
| APSB-KDUP-VHF-R4 | 4RF SR+ Acc, Kit, Duplexer, 152-175 MHz, s8-10 MHz, p100 kHz, High |
| APSB-KDUP-VHF-R5 | 4RF SR+ Acc, Kit, Duplexer, 138-156 MHz, s4-6 MHz, p100 kHz, Low |
| APSB-KDUP-VHF-R6 | 4RF SR+ Acc, Kit, Duplexer, 138-156 MHz, s6-8 MHz, p100 kHz, Low |
| APSB-KDUP-VHF-R7 | 4RF SR+ Acc, Kit, Duplexer, 138-156 MHz, s8-10 MHz, p100 kHz, Low |

# USB RS-232 Serial Port

The Aprisa SR+ USB host port is predominantly used for software upgrade and diagnostic reporting. However, it can also be used to provide an additional RS-232 DCE serial port for customer traffic.

This is accomplished with a USB to RS-232 serial converter cable. This plugs into the USB host port connector and can be terminated with the required customer connector.

This additional RS-232 serial port is enabled with the SuperVisor mode setting in Serial Port Settings.

The Aprisa SR+ USB port has driver support for these USB serial converters. Other USB serial converters may not operate correctly.

## USB RS-232 operation

The USB serial converter buffers the received data frames into 64 byte blocks separated by a small inter-frame gap.

For the majority of applications, this fragmentation of egress frames is not an issue. However, there are some applications that may be sensitive to the inter-frame gap, therefore, these applications need consideration.

A 5 ms inter-frame is recommended for the applications that are sensitive to inter-frame gap timings.

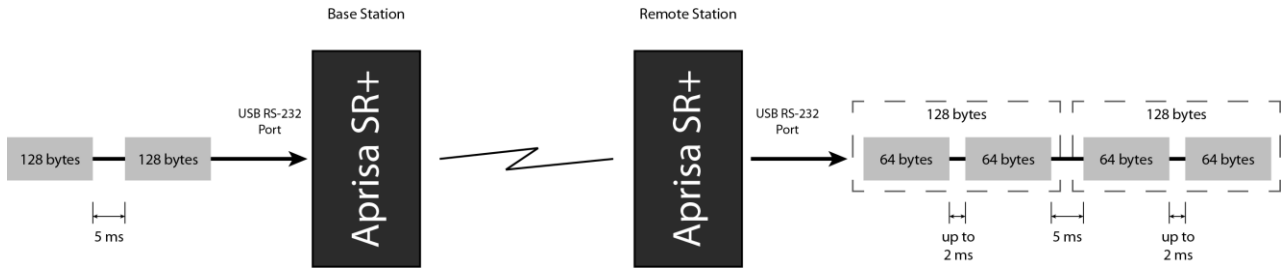


On a USB RS-232 port, Modbus RTU can operate up to 9600 bit/s with all packet sizes and up to 115200 bit/s if the packet size is less than 64 bytes. The standard RS-232 port is fully compatible with Modbus RTU at all baud rates.

# 3. Specifications

## RF Specifications

Blocking (desensitization), intermodulation, spurious response rejection, and adjacent channel selectivity values determined according to the methods introduced in V1.7.1 of ETSI standards EN 300 113-1.

## Frequency Bands

### ETSI Compliant

| Broadcast Band | Frequency Band | Frequency Tuning Range | Synthesizer Step Size |
|---|---|---|---|
| UHF | 320 MHz | 320-400 MHz | 6.250 kHz |

### ETSI / FCC / IC Compliant

| Broadcast Band | Frequency Band | Frequency Tuning Range | Synthesizer Step Size |
|---|---|---|---|
| VHF | 135 MHz (1) | 135-175 MHz | 2.5 kHz |
| UHF | 400 MHz | 400-470 MHz | 6.250 kHz |

### ETSI / FCC Compliant

| Broadcast Band | Frequency Band | Frequency Tuning Range | Synthesizer Step Size |
|---|---|---|---|
| UHF | 450 MHz (1) | 450-520 MHz | 6.250 kHz |

### FCC / IC Compliant

| Broadcast Band | Frequency Band | Frequency Tuning Range | Synthesizer Step Size |
|---|---|---|---|
| UHF | 220 MHz (1) | 220-222 MHz | 2.5 kHz |
| UHF | 220 MHz (1) | 216-220 MHz | 3.125 kHz |
| UHF | 896 MHz (1) | 896-902 MHz | 6.250 kHz |
| UHF | 928 MHz (1) | 928-960 MHz | 6.250 kHz |

Note 1: Please consult 4RF for availability.

* The frequency ranges are not an indication of the exact frequencies approved by FCC / IC.

# Channel Sizes

## ETSI Compliant

### 135 / 320 / 400 / 450 MHz Bands

No Forward Error Correction

| Channel Size | Gross Radio Capacity | | | |
|---|---|---|---|---|
| | 64 QAM | 16 QAM | QPSK | 4-CPFSK |
| 12.5 kHz | 60.0 kbit/s | 40.0 kbit/s | 20.0 kbit/s | 9.6 kbit/s |
| 25 kHz | 120.0 kbit/s | 80.0 kbit/s | 40.0 kbit/s | 19.2 kbit/s |

Minimum Coded Forward Error Correction

| Channel Size | Gross Radio Capacity less FEC | | | |
|---|---|---|---|---|
| | 64 QAM | 16 QAM | QPSK | 4-CPFSK |
| 12.5 kHz | 52.0 kbit/s | 23.1 kbit/s | 11.6 kbit/s | 8.4 kbit/s |
| 25 kHz | 103.9 kbit/s | 46.2 kbit/s | 23.1 kbit/s | 16.7 kbit/s |

Maximum Coded Forward Error Correction

| Channel Size | Gross Radio Capacity less FEC | | | |
|---|---|---|---|---|
| | 64 QAM | 16 QAM | QPSK | 4-CPFSK |
| 12.5 kHz | 45.6 kbit/s | 17.3 kbit/s | 8.7 kbit/s | 4.1 kbit/s |
| 25 kHz | 91.2 kbit/s | 34.6 kbit/s | 17.3 kbit/s | 8.3 kbit/s |

## FCC / IC Compliant

### 135 / 400 / 450 MHz Bands

No Forward Error Correction

| Channel Size | Gross Radio Capacity | | | |
|---|---|---|---|---|
| | 64 QAM | 16 QAM | QPSK | 4-CPFSK |
| 12.5 kHz | 54.0 kbit/s | 36.0 kbit/s | 18.0 kbit/s | 9.6 kbit/s |
| 25 kHz | 96.0 kbit/s | 64.0 kbit/s | 32.0 kbit/s | 19.2 kbit/s |

Minimum Coded Forward Error Correction

| Channel Size | Gross Radio Capacity less FEC | | | |
|---|---|---|---|---|
| | 64 QAM | 16 QAM | QPSK | 4-CPFSK |
| 12.5 kHz | 46.8 kbit/s | 20.8 kbit/s | 10.4 kbit/s | 8.4 kbit/s |
| 25 kHz | 83.1 kbit/s | 37.0 kbit/s | 18.5 kbit/s | 16.7 kbit/s |

Maximum Coded Forward Error Correction

| Channel Size | Gross Radio Capacity less FEC | | | |
|---|---|---|---|---|
| | 64 QAM | 16 QAM | QPSK | 4-CPFSK |
| 12.5 kHz | 41.0 kbit/s | 15.6 kbit/s | 7.8 kbit/s | 4.1 kbit/s |
| 25 kHz | 73.0 kbit/s | 27.7 kbit/s | 13.9 kbit/s | 8.3 kbit/s |

## 220 / 896 / 928 MHz Bands

No Forward Error Correction

| Channel Size | Gross Radio Capacity | | | |
|---|---|---|---|---|
| | 64 QAM | 16 QAM | QPSK | 4-CPFSK |
| 12.5 kHz | 60.0 kbit/s | 40.0 kbit/s | 20.0 kbit/s | 9.6 kbit/s |
| 25 kHz | 96.0 kbit/s | 64.0 kbit/s | 32.0 kbit/s | 19.2 kbit/s |
| 50 kHz | 216.0 kbit/s | 144.0 kbit/s | 72.0 kbit/s | 38.4 kbit/s |

Minimum Coded Forward Error Correction

| Channel Size | Gross Radio Capacity less FEC | | | |
|---|---|---|---|---|
| | 64 QAM | 16 QAM | QPSK | 4-CPFSK |
| 12.5 kHz | 52.0 kbit/s | 23.1 kbit/s | 11.6 kbit/s | 8.4 kbit/s |
| 25 kHz | 83.1 kbit/s | 37.0 kbit/s | 18.5 kbit/s | 16.7 kbit/s |
| 50 kHz | 187.1 kbit/s | 83.2 kbit/s | 41.6 kbit/s | 33.4 kbit/s |

Maximum Coded Forward Error Correction

| Channel Size | Gross Radio Capacity less FEC | | | |
|---|---|---|---|---|
| | 64 QAM | 16 QAM | QPSK | 4-CPFSK |
| 12.5 kHz | 45.6 kbit/s | 17.3 kbit/s | 8.7 kbit/s | 4.1 kbit/s |
| 25 kHz | 73.0 kbit/s | 27.7 kbit/s | 13.9 kbit/s | 8.3 kbit/s |
| 50 kHz | 164.2 kbit/s | 62.4 kbit/s | 31.2 kbit/s | 16.5 kbit/s |

# Receiver

## ETSI / FCC / IC Compliant Receiver Sensitivity

| | | | 12.5 kHz | 25 kHz | 50 kHz<br>FCC / IC only |
|---|---|---|---|---|---|
| BER < $10^{-2}$ | 64 QAM | Max coded FEC | -106 dBm | -102 dBm | -99 dBm |
| BER < $10^{-2}$ | 64 QAM | Min coded FEC | -105 dBm | -101 dBm | -98 dBm |
| BER < $10^{-2}$ | 64 QAM | No FEC | -103 dBm | -99 dBm | -96 dBm |
| BER < $10^{-2}$ | 16 QAM | Max coded FEC | -113 dBm | -110 dBm | -107 dBm |
| BER < $10^{-2}$ | 16 QAM | Min coded FEC | -112 dBm | -109 dBm | -106 dBm |
| BER < $10^{-2}$ | 16 QAM | No FEC | -109 dBm | -106 dBm | -103 dBm |
| BER < $10^{-2}$ | QPSK | Max coded FEC | -118 dBm | -115 dBm | -112 dBm |
| BER < $10^{-2}$ | QPSK | Min coded FEC | -117 dBm | -114 dBm | -111 dBm |
| BER < $10^{-2}$ | QPSK | No FEC | -115 dBm | -112 dBm | -109 dBm |
| BER < $10^{-2}$ | 4-CPFSK | Max coded FEC | NA | NA | NA |
| BER < $10^{-2}$ | 4-CPFSK | Min coded FEC | -117 dBm | -114 dBm | -111 dBm |
| BER < $10^{-2}$ | 4-CPFSK | No FEC | -115 dBm | -112 dBm | -109 dBm |
| BER < $10^{-6}$ | 64 QAM | Max coded FEC | -103 dBm | -99 dBm | -96 dBm |
| BER < $10^{-6}$ | 64 QAM | Min coded FEC | -101 dBm | -97 dBm | -94 dBm |
| BER < $10^{-6}$ | 64 QAM | No FEC | -96 dBm | -92 dBm | -89 dBm |
| BER < $10^{-6}$ | 16 QAM | Max coded FEC | -110 dBm | -107 dBm | -104 dBm |
| BER < $10^{-6}$ | 16 QAM | Min coded FEC | -108 dBm | -105 dBm | -102 dBm |
| BER < $10^{-6}$ | 16 QAM | No FEC | -102 dBm | -99 dBm | -96 dBm |
| BER < $10^{-6}$ | QPSK | Max coded FEC | -115 dBm | -112 dBm | -109 dBm |
| BER < $10^{-6}$ | QPSK | Min coded FEC | -113 dBm | -110 dBm | -107 dBm |
| BER < $10^{-6}$ | QPSK | No FEC | -108 dBm | -105 dBm | -102 dBm |
| BER < $10^{-6}$ | 4-CPFSK | Max coded FEC | NA | NA | NA |
| BER < $10^{-6}$ | 4-CPFSK | Min coded FEC | -113 dBm | -110 dBm | -107 dBm |
| BER < $10^{-6}$ | 4-CPFSK | No FEC | -108 dBm | -105 dBm | -102 dBm |

## ETSI / FCC / IC Compliant Adjacent Channel Selectivity

| | | 12.5 kHz | 25 kHz | 50 kHz<br>FCC / IC only |
|---|---|---|---|---|
| Adjacent channel selectivity | | > -47 dBm | > -37 dBm | > -37 dBm |
| BER < $10^{-2}$ | 64 QAM | > 43 dB | > 53 dB | > 53 dB |
| BER < $10^{-2}$ | 16 QAM | > 43 dB | > 53 dB | > 53 dB |
| BER < $10^{-2}$ | QPFK | > 48 dB | > 58 dB | > 58 dB |
| BER < $10^{-2}$ | 4-CPFSK | > 55 dB | > 65 dB | > 65 dB |

## ETSI / FCC / IC Compliant Co-Channel Rejection

| | | 12.5 kHz | 25 kHz | 50 kHz<br>FCC / IC only |
|---|---|---|---|---|
| BER < $10^{-2}$ | 64 QAM | > -23 dB | > -23 dB | > -23 dB |
| BER < $10^{-2}$ | 16 QAM | > -19 dB | > -19 dB | > -19 dB |
| BER < $10^{-2}$ | QPFK | > -12 dB | > -12 dB | > -12 dB |
| BER < $10^{-2}$ | 4-CPFSK | > -17 dB | > -17 dB | > -17 dB |

## ETSI / FCC / IC Compliant Intermodulation Response Rejection

| | | 12.5 kHz | 25 kHz | 50 kHz<br>FCC / IC only |
|---|---|---|---|---|
| Intermodulation response rejection | | > -35 dBm | > -35 dBm | > -35 dBm |
| BER < $10^{-2}$ | 64 QAM | > 55 dB | > 55 dB | > 55 dB |
| BER < $10^{-2}$ | 16 QAM | > 55 dB | > 55 dB | > 55 dB |
| BER < $10^{-2}$ | QPFK | > 60 dB | > 60 dB | > 60 dB |
| BER < $10^{-2}$ | 4-CPFSK | > 65 dB | > 65 dB | > 65 dB |

## ETSI / FCC / IC Compliant Blocking or Desensitization

| | | 12.5 kHz | 25 kHz | 50 kHz<br>FCC / IC only |
|---|---|---|---|---|
| Blocking or desensitization | | > -17 dBm | > -17 dBm | > -17 dBm |
| BER < $10^{-2}$ | 64 QAM | > 73 dB | > 73 dB | > 73 dB |
| BER < $10^{-2}$ | 16 QAM | > 73 dB | > 73 dB | > 73 dB |
| BER < $10^{-2}$ | QPFK | > 78 dB | > 78 dB | > 78 dB |
| BER < $10^{-2}$ | 4-CPFSK | > 85 dB | > 85 dB | > 85 dB |

## ETSI / FCC / IC Compliant Spurious Response Rejection

| | | **12.5 kHz** | **25 kHz** | **50 kHz**<br>FCC / IC only |
|---|---|---|---|---|
| Spurious response rejection | | > -32 dBm | > -32 dBm | > -32 dBm |
| BER < $10^{-2}$ | 64 QAM | > 58 dB | > 58 dB | > 58 dB |
| BER < $10^{-2}$ | 16 QAM | > 58 dB | > 58 dB | > 58 dB |
| BER < $10^{-2}$ | QPFK | > 63 dB | > 63 dB | > 63 dB |
| BER < $10^{-2}$ | 4-CPFSK | > 70 dB | > 70 dB | > 70 dB |

## ETSI / FCC / IC Compliant Receiver Spurious Radiation

| | **12.5 kHz** | **25 kHz** | **50 kHz**<br>FCC / IC only |
|---|---|---|---|
| Receiver spurious radiation | > -57 dBm | > -57 dBm | > -57 dBm |

## Transmitter

| | | |
|---|---|---|
| Average Power output<br>Note: The Peak Envelope Power (PEP) at maximum set power level is +41 dBm. | 64 QAM | 0.01 to 2.5 W (+10 to +34 dBm, in 1 dB steps) |
| | 16 QAM | 0.01 to 3.2 W (+10 to +35 dBm, in 1 dB steps) |
| | QPSK | 0.01 to 5.0 W (+10 to +37 dBm, in 1 dB steps) |
| | 4-CPFSK (Note 1) | 0.01 to 10.0 W (+10 to +40 dBm, in 1 dB steps) |

Note 1: Please consult 4RF for availability

Note: The Aprisa SR+ transmitter contains power amplifier protection which allows the antenna to be disconnected from the antenna port without product damage.

| | |
|---|---|
| Adjacent channel power | < - 60 dBc |
| Transient adjacent channel power | < - 60 dBc |
| Spurious emissions | < - 37 dBm |
| Attack time | < 1.5 ms |
| Release time | < 0.5 ms |
| Data turnaround time | < 2 ms |
| Frequency stability | ± 1.0 ppm |
| | ± 0.1 ppm<br>The 220 / 896 / 928 MHz products have a frequency stability option of ± 0.1 ppm. |
| Frequency aging | < 1 ppm / annum |

## Modem

| | |
|---|---|
| Forward Error Correction | Variable length concatenated Reed Solomon plus convolutional code |
| Adaptive Burst Support | Adaptive FEC<br>Adaptive Coding Modulation |

## Data Payload Security

| | |
|---|---|
| Data payload security | CCM* Counter with CBC-MAC |
| Data encryption | Counter Mode Encryption (CTR) using Advanced Encryption Standard (AES) 128, 192 or 256 |
| Data authentication | Cipher Block Chaining Message Authentication Code (CBC-MAC) using Advanced Encryption Standard (AES) 128, 192 or 256 |

# Interface Specifications

## Ethernet Interface

The Aprisa SR+ radio features an integrated 10Base-T/100Base-TX layer-2 Ethernet switch.

To simplify network setup, each port supports auto-negotiation and auto-sensing MDI/MDIX. Operators can select from the following preset modes:

- Auto negotiate
- 10Base-T half or full duplex
- 100Base-TX half or full duplex

The Ethernet ports are IEEE 802.3-compatible. The L2 Bridge (Switch) is IEEE 802.1d/q/p compatible, and supports VLANs and VLAN manipulation of add/remove VLANs.

| | | |
|---|---|---|
| **General** | Interface | RJ45 x 2 (Integrated 2-port switch) |
| | Cabling | CAT-5/6 UTP, supports auto MDIX (Standard Ethernet) |
| | Maximum line length | 100 metres on cat-5 or better |
| | Bandwidth allocation | The Ethernet capacity maximum is determined by the available radio link capacity. |
| | Maximum transmission unit | Option setting of 1522 or 1536 octets |
| | Address table size | 1024 MAC addresses |
| | Ethernet mode | 10Base-T or 100Base-TX<br>Full duplex or half duplex<br>(Auto-negotiating and auto-sensing) |
| **Diagnostics** | Left Green LED | Off: no Ethernet signal received<br>On: Ethernet signal received |
| | Right Orange LED | Off: no data present on the interface<br>Flashing: data present on the interface |

**Note:** Do not connect Power over Ethernet (PoE) connections to the Aprisa SR+ Ethernet ports as this will damage the port.

# RS-232 Asynchronous Interface

The Aprisa SR+ radio's ITU-T V.24 compliant RS-232 interface is configured as a Cisco® pinout DCE. The interface terminates to a DTE using a straight-through cable or to a DCE with a crossover cable (null modem).

The interface uses two handshaking control lines between the DTE and the DCE.

| | | |
|---|---|---|
| **General** | Interface | ITU-T V.24 / EIA/TIA RS-232E |
| | Interface direction | DCE only |
| | Maximum line length | 10 metres (dependent on baud rate) |
| **Async parameters** | Standard mode data bits | 7 or 8 bits |
| | Standard mode parity | Configurable for None, Even or Odd |
| | Standard mode stop bits | 1 or 2 bits |
| | Interface baud rates | 300, 1200, 2400, 4800, 9600, 19200, 38400, 57600 and 115200 bit/s |
| **Control signals** | DCE to DTE | CTS, RTS, DSR, DTR |
| **Diagnostics** | Left Green LED | Off: no RS-232 device connected<br>On: RS-232 device connected |
| | Right Orange LED | Off: no data present on the interface<br>Flashing: data present on the interface |

# Hardware Alarms Interface

The hardware alarms interface supports two alarm inputs and two alarms outputs.

## Alarm Inputs

The alarm connector provides two hardware alarm inputs for alarm transmission to the other radios in the network.

| | |
|---|---|
| Interface | RJ45 connector |
| Detector type | Non-isolated ground referenced voltage detector |
| Detection voltage - on | > +10 VDC |
| Detection voltage - off | < +4 VDC |
| Maximum applied input voltage | 30 VDC |
| Maximum input current limit | 10 mA |

## Alarm Outputs

The alarm connector provides two hardware alarm outputs for alarm reception from other radios in the network.

| | |
|---|---|
| Interface | RJ45 connector |
| Output type | Non-isolated ground referenced open collector output |
| Maximum applied voltage | 30 VDC |
| Maximum drive current | 100 mA |
| Overload protection | Thermally resettable fuse |

## Protect Interface

The Protect interface is used to connect the radios to the protection switch within a Protected Station. It is not a customer interface.

| | |
|---|---|
| Interface | Female protect connector |

# Protection Switch Specifications

| | |
|---|---|
| RF Insertion Loss | < 0.5 dB |
| Remote Control inputs | Logic 4700 ohms pullup to +3.3 VDC |

# Power Specifications

## Power Supply

Aprisa SR+ Radio

| | |
|---|---|
| Nominal voltage | +13.8 VDC (negative earth) |
| Absolute input voltage range | +10 to +30 VDC |
| Maximum power input | 35 W |
| Connector | Molex 2 pin male screw fitting<br>39526-4002 |

Aprisa SR+ Protected Station

| | |
|---|---|
| Nominal voltage | +13.8 VDC (negative earth) |
| Absolute input voltage range | +10 to +30 VDC |
| Maximum power input | 35 W |
| Connector | 2x Molex 2 pin male screw fitting<br>39526-4002 |

Aprisa SR+ Data Driven Protected Station

| | |
|---|---|
| Nominal voltage | +13.8 VDC (negative earth) |
| Absolute input voltage range | +10 to +30 VDC |
| Maximum power input | 35 W |
| Connector | 2x Molex 2 pin male screw fitting<br>39526-4002 |

# Power Consumption

Note: The radio power consumption is very dependent on transmitter power, the type of traffic and network activity.

Aprisa SR+ Radio

| Mode | Power Consumption (10 W radio with 4-CPFSK modulation) |
|---|---|
| Transmit / Receive | < 35 W for 10 W transmit power |
| | < 25.0 W for 1 W transmit power |
| Receive only | < 7 W |

Aprisa SR+ Protected Station and Aprisa SR+ Data Driven Protected Station

| Mode | Power Consumption (10 W radios with 4-CPFSK modulation) |
|---|---|
| Transmit / Receive | < 42 W for 10 W transmit power |
| | < 32.0 W for 1 W transmit power |
| Receive only | < 15 W |

# Power Dissipation

Aprisa SR+ Radio

| Transmit Power | Power Dissipation (10 W radio with 4-CPFSK modulation) |
|---|---|
| 10 W transmit power | < 25 W |
| 1 W transmit power | < 24 W |

Aprisa SR+ Protected Station and Aprisa SR+ Data Driven Protected Station

| Transmit Power | Power Dissipation (10 W radios with 4-CPFSK modulation) |
|---|---|
| 10 W transmit power | < 32 W |
| 1 W transmit power | < 31 W |

# General Specifications

## Environmental

| | |
|---|---|
| Operating temperature range | -40 to +70˚ C (-40 to +158˚ F) |
| Storage temperature range | -40 to +80˚ C (-40 to +176˚ F) |
| Operating humidity | Maximum 95% non-condensing |
| Acoustic noise emission | No audible noise emission |

## Mechanical

### Aprisa SR+ Radio

| | |
|---|---|
| Dimensions | Width 210 mm (8.27”)<br>Depth 130 mm (5.12”) and 146 mm (5.748”) with TNC connectors<br>Height 41.5 mm (1.63”) |
| Weight | 1.25 kg (2.81 lbs) |
| Colour | Matt black |
| Mounting | Wall (2 x M5 screws)<br>Rack shelf (2 x M4 screws)<br>DIN rail bracket |

### Aprisa SR+ Protected Station

| | |
|---|---|
| Dimensions | Width 432.6 mm (17”)<br>Depth 372 mm (14.6”) and 388 mm (15.276”) with TNC connectors<br>Height 2U plus external duplexer (if used) |
| Weight | 12 kg (27 lbs) (includes the 2 radios) |
| Colour | Matt black |
| Mounting | Rack mount (2 x M6 screws) |

# Compliance

## ETSI

| | |
|---|---|
| Radio | EN 300 113-2 |
| EMI / EMC | EN 301 489 Parts 1 & 5 |
| Safety | EN 60950-1:2006<br>Class 1 div 2 for hazardous locations |
| Environmental | ETS 300 019 Class 3.4<br>Ingress Protection code IP51 |

## FCC

| | |
|---|---|
| Radio | 47CFR part 24, part 90 and part 101 Private Land Mobile Radio Services |
| EMC | 47CFR part 15 Radio Frequency Devices, EN 301 489 Parts 1 & 4 |
| Safety | EN 60950-1:2006<br>Class 1 div 2 for hazardous locations |
| Environmental | ETS 300 019 Class 3.4<br>Ingress Protection code IP51 |

## IC

| | |
|---|---|
| Radio | RSS-119 / RSS-134 |
| EMC | This Class A digital apparatus complies with Canadian standard ICES-003.<br>Cet appareil numérique de la classe A est conforme à la norme NMB-003 du Canada. |
| Safety | EN 60950-1:2006<br>Class 1 div 2 for hazardous locations |
| Environmental | ETS 300 019 Class 3.4<br>Ingress Protection code IP51 |

# 4. Management

## SuperVisor

The Aprisa SR+ contains an embedded web server application (SuperVisor) to enable element management with any major web browser (such as Mozilla Firefox or Microsoft® Internet Explorer).

SuperVisor enables operators to configure and manage the Aprisa SR+ base station radio and repeater / remote station radios over the radio link.

The key features of SuperVisor are:

- Full element management, configuration and diagnostics
- Manage the entire network from the Base Station (remote management of elements)
- Managed network software distribution and upgrades
- Performance and alarm monitoring of the entire network, including RSSI, alarm states, time-stamped events.
- View and set standard radio configuration parameters including frequencies, transmit power, channel access, serial, Ethernet port settings
- Set and view security parameters
- User management
- Operates over a secure HTTPS session on the access connection to the base station

The following are three examples of SuperVisor screens:

# Viewing the Aprisa SR+ Terminal Settings

The SuperVisor software enables operators to view the terminal settings:

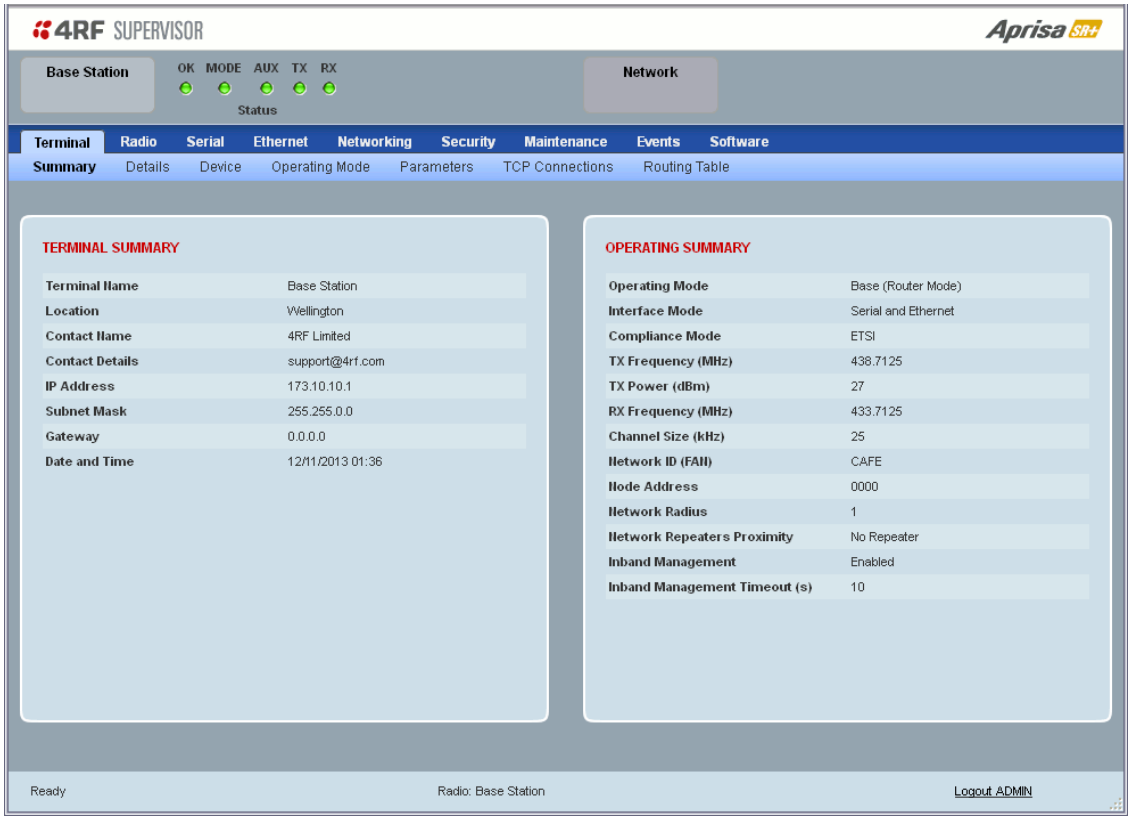

# Configuring the Aprisa SR+ Terminal Details

The SuperVisor software enables operators to set the terminal details including Terminal Name, Location, Contact Name and Contact Details with a maximum of 40 characters.

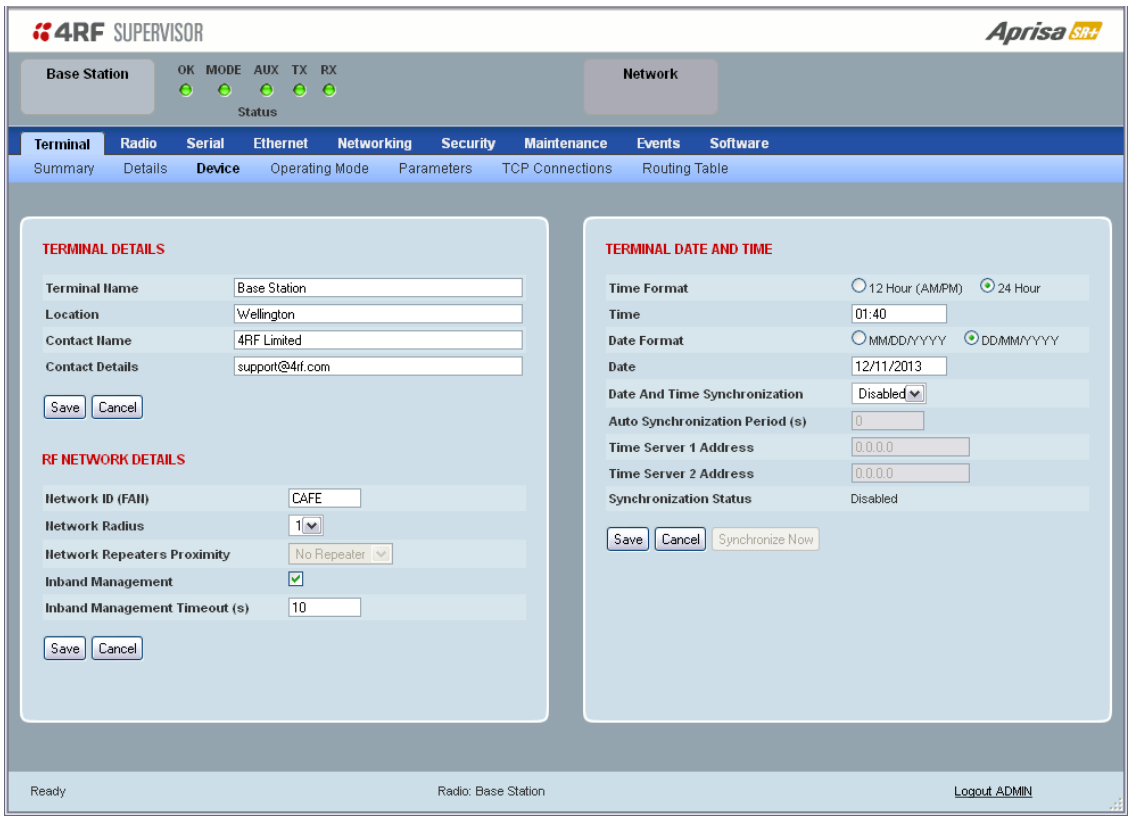


# Configuring the Aprisa SR+ RF Network Details

The SuperVisor software enables operators to set the RF Network Details including:

| | |
|---|---|
| Network ID | Sets the network ID of this base station node and its remote nodes.<br>Four hex chars |
| Network Radius | Sets the maximum number of hops in this network |
| Network Repeaters Proximity | Sets the proximity of repeaters in this network |
| Inband Management | Enables inband management of remotes / repeaters |
| Inband Management Timeout (sec) | Sets the inband management timeout period |

# Configuring the Aprisa SR+ Radio Settings

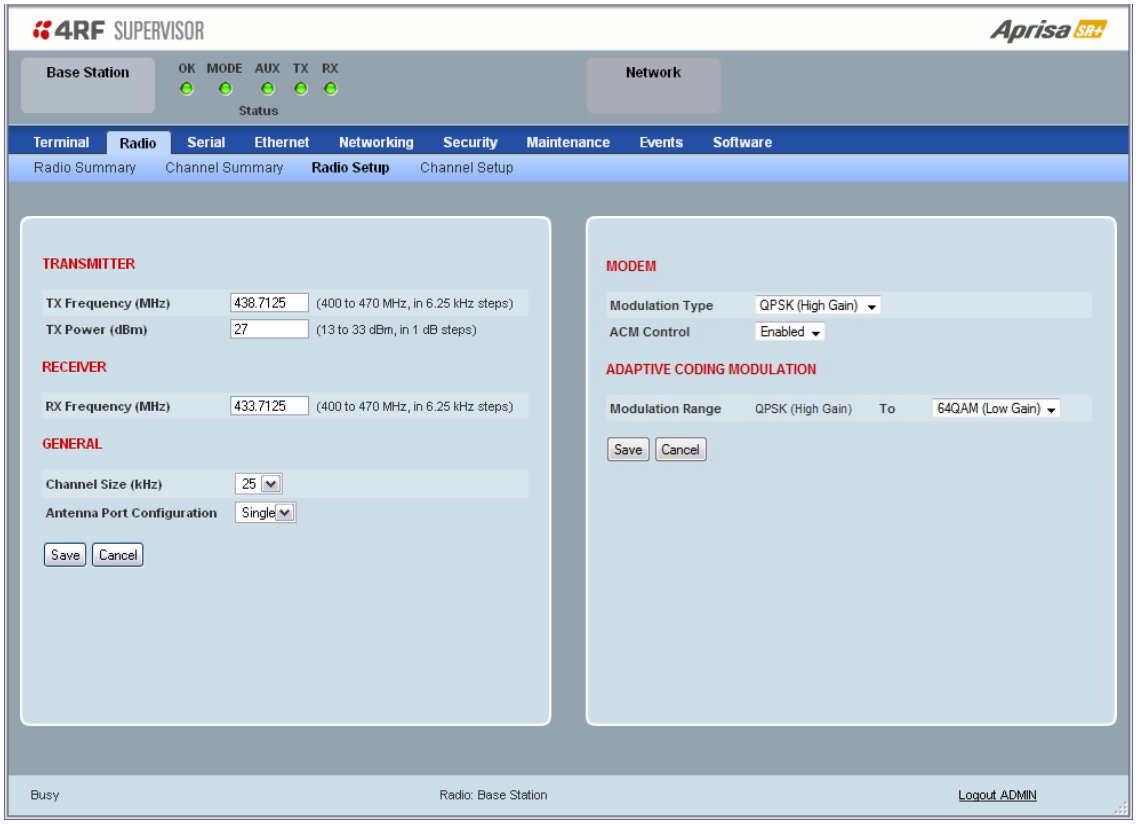


The SuperVisor software enables operators to set the radio settings including:

| | |
|---|---|
| TX Frequency | Sets the transmit frequency in MHz |
| TX Power | Sets the transmit Power in dBm |
| RX Frequency | Sets the receive frequency in MHz |
| Channel Size | Sets the channel size 12.5 kHz, 25 kHz or 50 kHz (depending on variant) |
| Antenna Port Configuration | Sets the antenna port configuration to single port or dual port |
| Modulation Type | Sets the fixed TX Modulation Type for the base station radio |
| ACM Control | Enables / disables Adaptive Code Modulation for the remote to base direction of transmission (upstream) |
| Modulation Range | Sets the upper limit of the range that the base station willl recommmend to the remote radios |

# Command Line Interface

The Aprisa SR+ has a Command Line Interface (CLI) which provides basic product setup and configuration.

This interface can be accessed via an Ethernet Port (RJ45) or the Management Port (USB micro type B).

The Terminal menu is shown in the following picture:

```
>>cd APRISASR-MIB-4RF
MPA APRISASR-MIB-4RF >>ls Terminal
+-------------------------------------------------------+
|S.NO|ATTRIBUTE NAME                |ATTRIBUTE VALUE     |
+-------------------------------------------------------+
|1   |termName                      |Base Station        |
|2   |termLocation                  |Wellington          |
|3   |termContactName               |4RF Limited         |
|4   |termContactDetails            |support@4rf.com     |
|5   |termTimeFormat                |time24h (1)         |
|6   |termDateFormat                |ddmmyyyy (1)        |
|7   |termDateTime                  |2013-9-12,19:22:43.0|
|8   |termEthController1IpAddress   |173.10.10.1         |
|9   |termEthController1SubnetMask  |255.255.0.0         |
|10  |termEthController1Gateway     |0.0.0.0             |
|11  |termRfNwkPanId                |CAFE                |
|12  |termRfNwkRadius               |1                   |
|13  |termInbandManagementEnabled   |true (1)            |
|14  |termInbandManagementTimeoutSec|10                  |
|15  |termRfNwkRepeaterProximity    |noRepeater (0)      |
+-------------------------------------------------------+
```

# SNMP

In addition to web-based management (SuperVisor) and the Command Line Interface, the Aprisa SR network can also be managed using the Simple Network Management Protocol (SNMP agent). MIB files are supplied which can be used by a dedicated SNMP Manager, such as Castle Rock's network management system, to support effective and flexible network monitoring and diagnostics.

Alternatively, the user can use its own 3rd party NMS SNMP agent to manage the SR+ radio network.

For communication between the SNMP manager and the radio, Access Controls and Community strings must be set up as described in the Aprisa SR+ User Manual.

# LED Display Panel

The Aprisa SR+ has an LED Display panel which provides on-site alarms / diagnostics without the need for PC.

## Normal Operation

In normal radio operation, the LEDs indicate the following conditions:

| | OK | MODE | AUX | TX | RX |
|---|---|---|---|---|---|
| **Solid Red** | *Alarm present with severity Critical, Major and Minor* | | | *TX path fail* | *RX path fail* |
| **Flashing Red** | | | | *Radio not connected to a base station* | *Radio not connected to a base station* |
| **Solid Orange** | *Alarm present with Warning Severity* | *Stand-by radio in protected station* | *Device detect on the USB host port (single flash)* | | |
| **Flashing Orange** | | *Diagnostics Function Active*<br>*OTA Firmware Distribution* | *Tx Data or Rx Data on the USB management or host port* | | |
| **Flashing Green** | | | | *RF path TX is active* | *RF path RX is active* |
| **Solid Green** | *Power on and functions OK and no alarms* | *Processor Block is OK*<br>*or active radio in protected station* | *USB interface OK* | *Tx path OK* | *Rx path OK* |

| LED Colour | Severity |
|---|---|
| Green | No alarm – information only |
| Orange | Warning alarm |
| Red | Critical, major or minor alarm |

## Single Radio Software Upgrade

During a radio software upgrade, the LEDs indicate the following conditions:

- Software upgrade started - the OK LED flashes orange
- Software upgrade progress indicated by running RX to OK LEDs
- Software upgrade completed successfully - the OK LED solid orange
- Software upgrade failed - any LED flashing red during the upgrade

## Network Software Upgrade

During a network software upgrade, the MODE LED flashes orange on the base station and all remote stations.

## Test Mode

In Test Mode, the LED Display panel presents a real time visual display of the RSSI. This can be used to adjust the antenna for optimum signal strength.

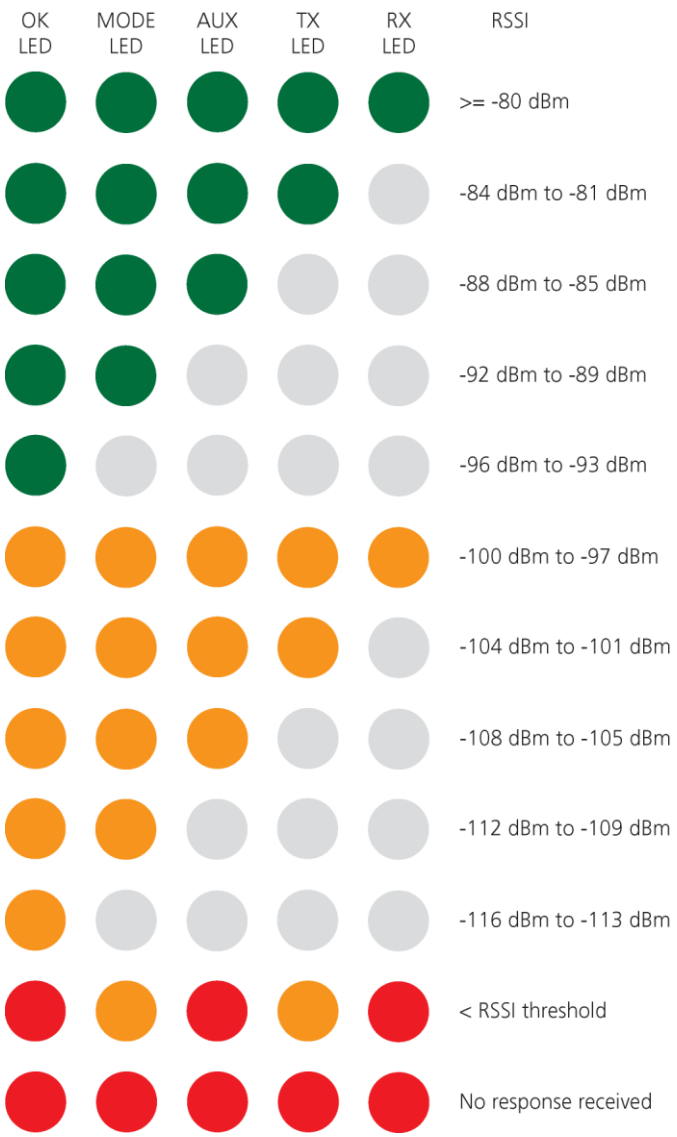

# 5. Applications

This section describes sample Aprisa SR+ radio applications.

The following applications are described:

- Basic point-to-multipoint application
- Advanced point-to-multipoint application with repeaters
- Multi-interface point-to-multipoint application
- Multi-hop Daisy chain repeaters in LBS mode application
- Pseudo Peer to Peer using base-repeater application

## Basic point-to-multipoint application

Single base station with Ethernet SCADA data inputs to multiple geographically remote sites with Ethernet RTUs requiring control and data acquisition.

The base station receives Ethernet frames from the SCADA server LAN and broadcasts all Ethernet frames to all remote stations

Each remote site receives Ethernet frames from the RTU and unicasts over the air to the base station.

The base station uses an omni directional antenna to provide wide coverage and the remote stations are fitted with directional Yagi antennas to provide higher gain.

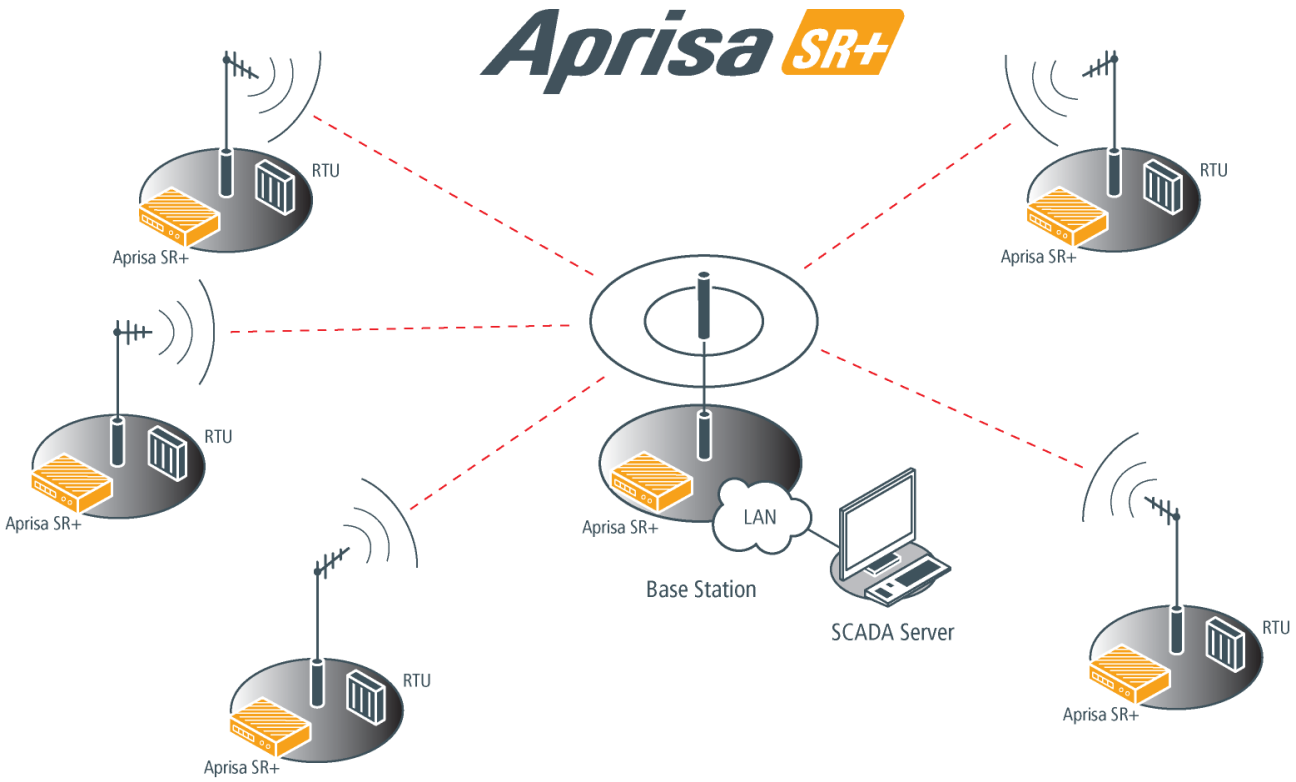

# Advanced point-to-multipoint application with repeater

Single base station with Ethernet SCADA data inputs to multiple geographically remote sites with Ethernet RTUs requiring control and data acquisition. A repeater is deployed to service remote sites beyond the reach of the base station.

The base station receives Ethernet frames from the SCADA server LAN and broadcasts all Ethernet frames to the repeater and its remote stations.

Three remote sites have direct radio communication with the base station but the other two remote sites operate via the repeater site.

Each remote site receives Ethernet frames from the RTU and unicasts over the air to the repeater / base station.

The base station and the repeater station use an omni directional antenna to provide wide coverage and the remote stations are fitted with directional Yagi antennas to provide higher gain.

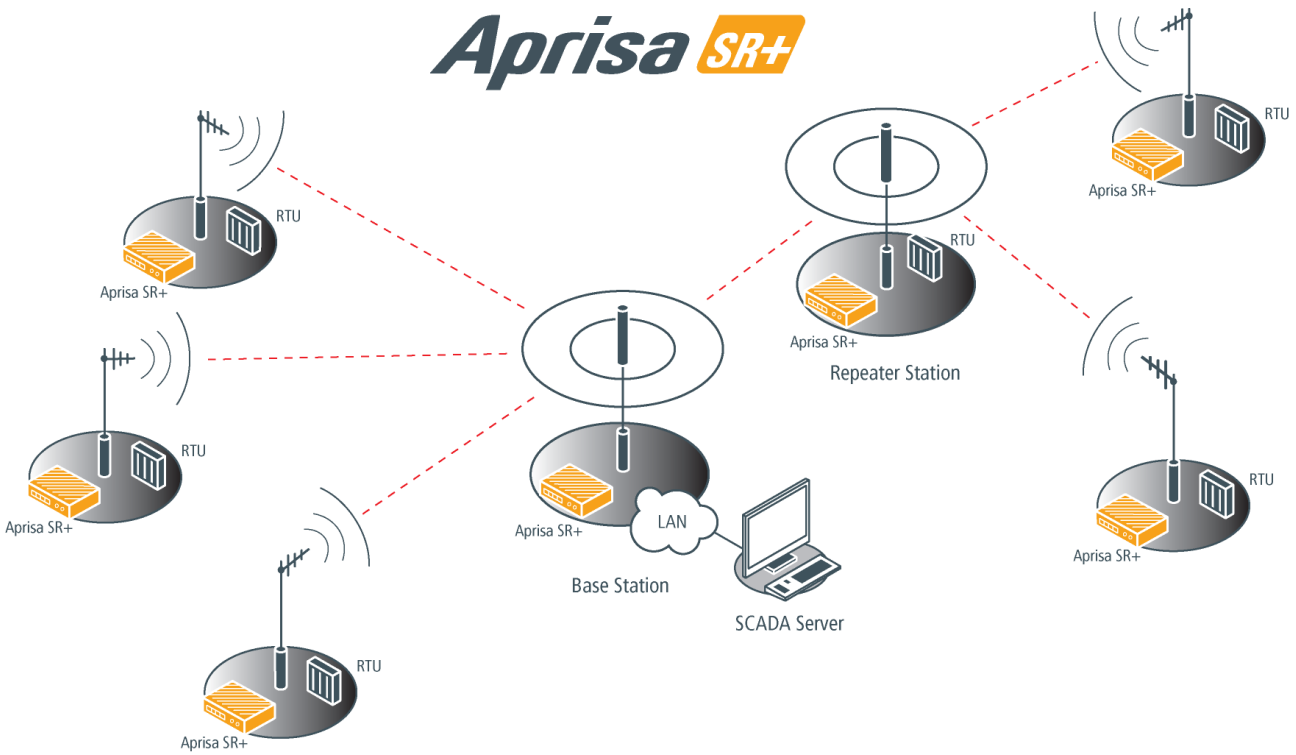

# Multi-interface point-to-multipoint application

Single base station with Ethernet and RS-232 SCADA data inputs to multiple geographically remote sites with Ethernet and RS-232 RTUs requiring control and data acquisition.

The base station receives Ethernet / RS-232 frames from the SCADA servers and broadcasts all frames to all remote stations

Each remote site receives Ethernet / RS-232 frames from the RTU and unicasts over the air to the base station.

The base station uses an omni directional antenna to provide wide coverage and the remote stations are fitted with directional Yagi antennas to provide higher gain.

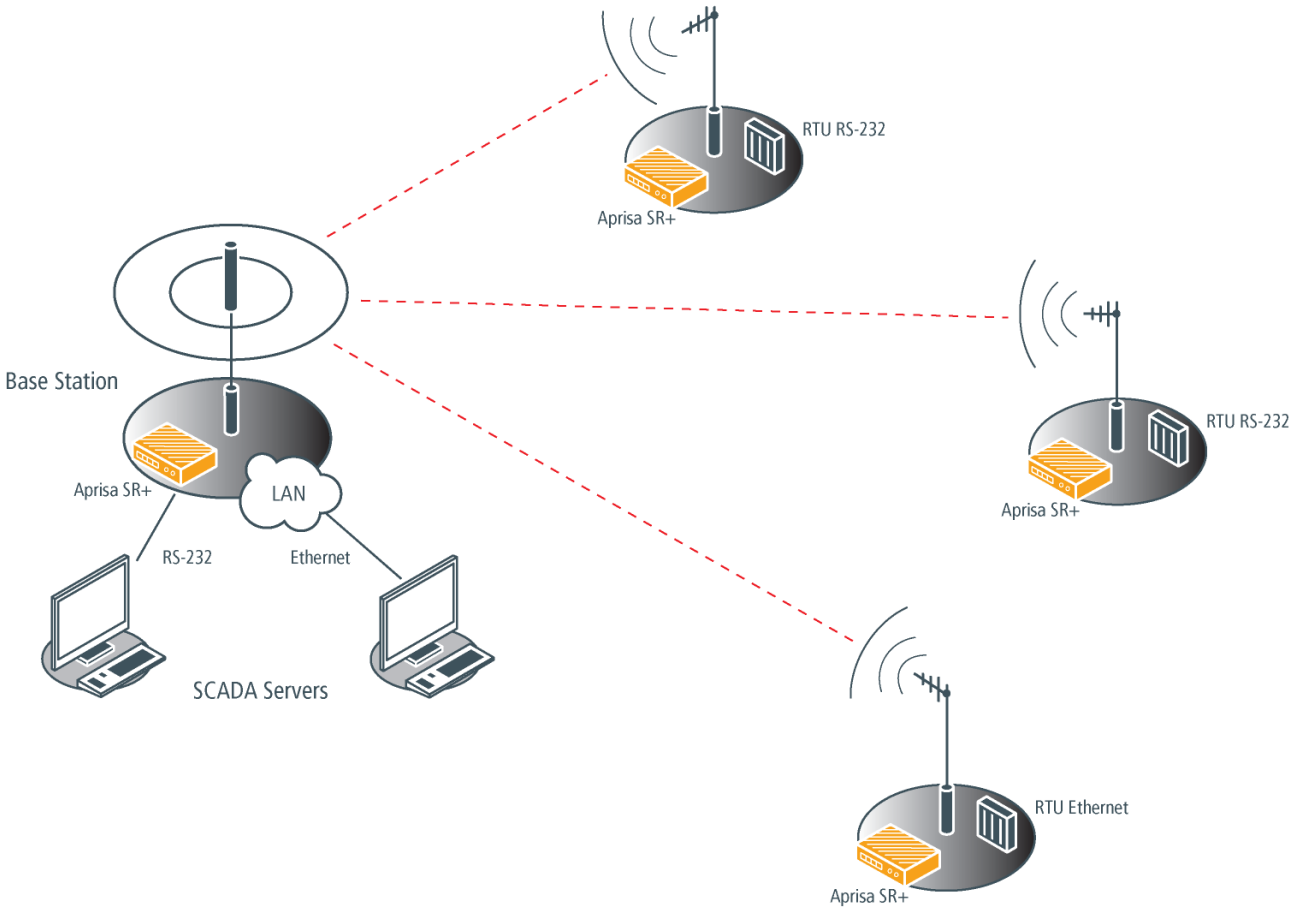

# Multi-hop Daisy Chain Repeaters in LBS Mode Application

This application is used for daisy chain repeaters when remote stations are very far from base station coverage. Daisy chain repeaters can only be used in LBS channel access mode (and future release in AR mode).

In the figure example below, the Base Station can communicate with any of the far remotes via the daisy chain repeaters. The SCADA master will communicate with RTU 2 using a source and destination IP address and the underlining SCADA protocol.

On the downstream, the SCADA master would like to communicate with RTU-2 and sends a packet destined to RTU-2 (using RTU 2 destination address). This packet received by the Base Station will then broadcast OTA to Repeater 1.

Repeater 1 will store-and-forward the received packet and re-transmit the packet to Repeater 2 and back to the Base Station, which will drop the duplicate packet as this packet is its own forward.

Repeater 2 will store-and-forward the packet to the local Ethernet port to RTU 3 (which will drop the packet due to destination address mismatch) and it will also re-transmit the packet OTA to Repeater 3, Remote 1 and back to Repeater 1, which will drop the duplicate packet as this packet is its own forward. Remote-1 will forward the packet to its local Ethernet port and RTU-1 will drop the packet due to destination address mismatch.

Repeater 3 will store-and-forward and re-transmit the packet OTA to Remote-2 and back to Repeater 2, which will drop the packet as duplicate packet as this packet is its own forward.

Remote 2 will then forward the packet to its local Ethernet port and RTU 2 as the destined address which will process the packet accordingly.

On the upstream, RTU 2 will send a packet to the SCADA master, and the radio network from Remote 2 sending a unicast packet destined to Base Station which will act with the same process mechanism as described above for downstream path.

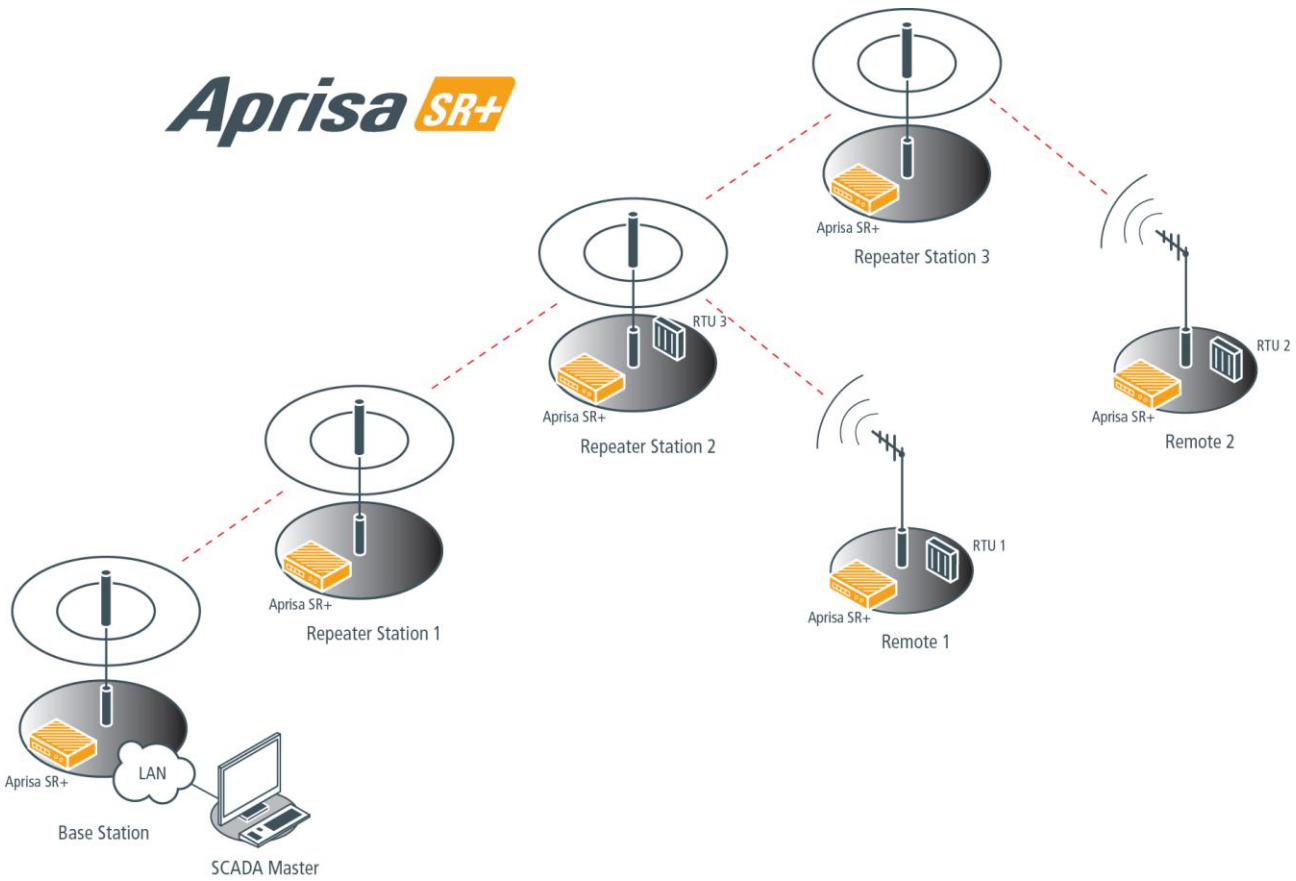

# Pseudo Peer to Peer using Base-Repeater Application

This application is used for remote peer to peer communication via a base-repeater or repeater configuration. In peer to peer, the source RTU will create a message with destination address of the destined RTU in the SCADA layer protocol (and/or IP layer, if applicable). Note, this address is only known by the RTUs as the SR+ radio is transparent to SCADA protocol messages. Although all messages sent from remotes are always destined to the base station, packets can be sent from one remote to the other using the 'packet filtering' peer to peer feature (see the Aprisa SR+ User Manual Radio > Channel Setup) and base-repeater or repeater configuration.

In the figure example below, RTU 1 would like to communicate with RTU 3, and thus, Remote 1 and Remote 3 will be configured with 'packet filtering' set to 'disabled' and the Base station configured as a Base-repeater.

RTU 1 will create a message destined to RTU 3 and forward it to Remote 1, which in turn will forward it as a unicast message OTA to the Repeater Station, destined to the Base Station (all packets from a remote are destined to the base station).

The Repeater Station will store-and-forward the message received from Remote 1 and re-transmit the message to Base Station, but it will also be received by Remote 2. Since, Remote 2 is not the destination and packet filtering is set to automatic (enabled), the packet will be dropped by Remote 2. Note, Remote 3 and Remote 4 can't hear the Repeater Station.

The Base-Repeater will forward the packet to the local ports (Ethernet and/or serial), and will also re-transmit the packet OTA to Remote 3 and Remote 4 and back to the Repeater (this is specific and default to Base-Repeater functionality, as packet filtering is not used in Base-Repeater operation and it can be left in default (automatic)). The Repeater will drop the duplicate packet as this packet is its own forward.

Remote 3 will receive the packet and forward it to it local ports (Ethernet or Serial) and to its local RTU 3, as packet filtering is disabled which will then process the packet accordingly. Remote 4 will also receive the packet, but it will drop the packet as packet filtering is enabled. If Remote 4 had packet filtering disabled, the packet would be forwarded to the local port and dropped by RTU 4, due to SCADA protocol destination address mismatch (and/or IP destination address mismatch, if applicable).

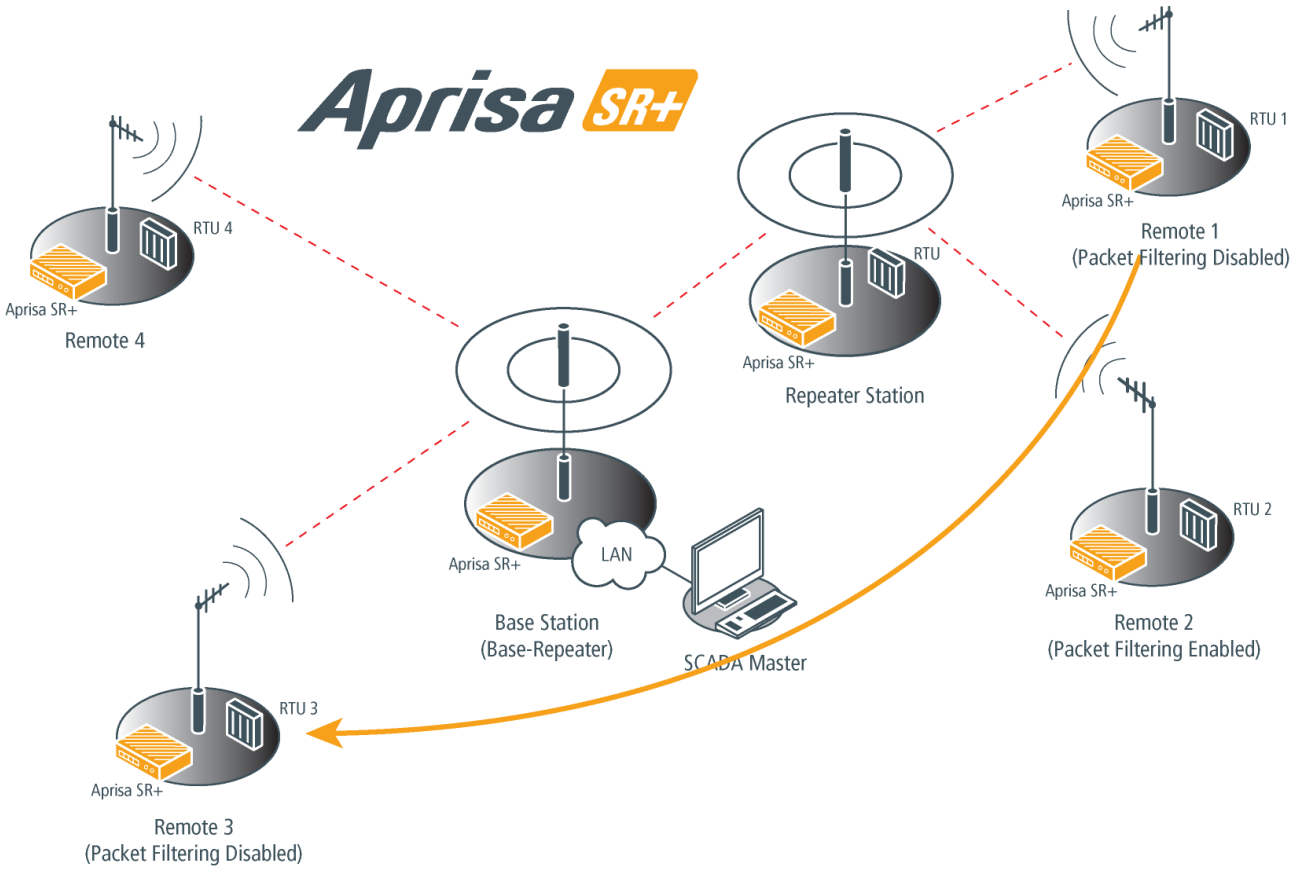

# 6. Product Architecture

## Product Operation

There are three components to the wireless interface: the Physical Layer (PHY), the Data Link Layer (DLL) and the Network Layer. These three layers are required to transport data across the wireless channel in the Point-to-multipoint (PMP) configuration. The Aprisa SR+ DLL is largely based on the 802.15.4 MAC layer using a proprietary implementation.

### Physical Layer

The Aprisa SR+ PHY uses a one or two frequency half duplex transmission mode which eliminates the need for a duplexer. However, a Dual Antenna port option is available for separate transmit and receive antenna connection to support external duplexers or filters (half duplex operation).

Remote nodes are predominantly in receive mode with only sporadic bursts of transmit data. This reduces power consumption.

The Aprisa SR+ is a packet based radio. Data is sent over the wireless channel in discrete packets / frames, separated in time. The PHY demodulates data within these packets with coherent detection.

The Aprisa SR+ PHY provides carrier, symbol and frame synchronization predominantly through the use of preambles. This preamble prefixes all packets sent over the wireless channel which enables fast Synchronization.

### Data Link Layer / MAC layer

The Aprisa SR+ PHY enables multiple users to be able to share a single wireless channel; however a DLL is required to manage data transport. The two key components to the DLL are channel access and hop by hop transmission.

### Channel Access

The Aprisa SR+ radio has two modes of channel access, Access Request and Listen Before Send.

| Option | Function |
|---|---|
| Access Request | Channel access scheme where the base stations controls the communication on the channel. Remotes ask for access to the channel, and the base station grants access if the channel is not occupied. |
| Listen Before Send | Channel access scheme where network elements listen to ensure the channel is clear, before trying to access the channel. |

### Access Request

This scheme is particularly suited to digital SCADA systems where all data flows through the base station. In this case it is important that the base station has contention-free access as it is involved in every transaction. The channel access scheme assigns the base station as the channel access arbitrator and therefore inherently it has contention-free access to the channel. This means that there is no possibility of contention on data originating from the base station. As all data flows to or from the base station, this significantly improves the robustness of the system.

All data messages are controlled via the AG (access grant) control message and therefore there is no possibility of contention on the actual end user data. If a remote station accesses the channel, the only contention risk is on the AR (access request) control message. These control messages are designed to be as short as possible and therefore the risk of collision of these control messages is significantly reduced. Should collisions occur these are resolved using a random back off and retry mechanism.

As the base station controls all data transactions multiple applications can be effectively handled, including a mixture of polling and report by exception.

### Listen Before Send

The Listen Before Send channel access scheme is realized using Carrier Sense Multiple Access (CSMA). In this mode, a pending transmission requires the channel to be clear. This is determined by monitoring the channel for other signals for a set time prior to transmission. This results in reduced collisions and improved channel capacity.

There are still possibilities for collisions with this technique e.g. if two radios simultaneously determine the channel is clear and transmit at the same time. In this case an acknowledged transaction may be used. The transmitter requests an ACK to ensure that the transmission has been successful. If the transmitter does not receive an ACK, then random backoffs are used to reschedule the next transmission.

## Hop by Hop Transmission

Hop by Hop Transmission is realized in the Aprisa SR+ by adding a MAC address header to the packet. For 802.15.4, there are 2 addresses, the source and destination addresses.

## Adaptive Coding Modulation

The Aprisa SR+ provides Adaptive Coding Modulation (ACM) which maximizes the use of the RF path to provide the highest radio capacity available.

ACM automatically adjusts the modulation coding and FEC code rate in the remote to base direction of transmission over the defined modulation range based on the signal quality for each individual remote radio.

When the RF path is healthy (no fading), modulation coding is increased and the FEC code rate is decreased to maximize the data capacity.

If the RF path quality degrades, modulation coding is decreased and the FEC code rate is increased for maximum robustness to maintain path connectivity.

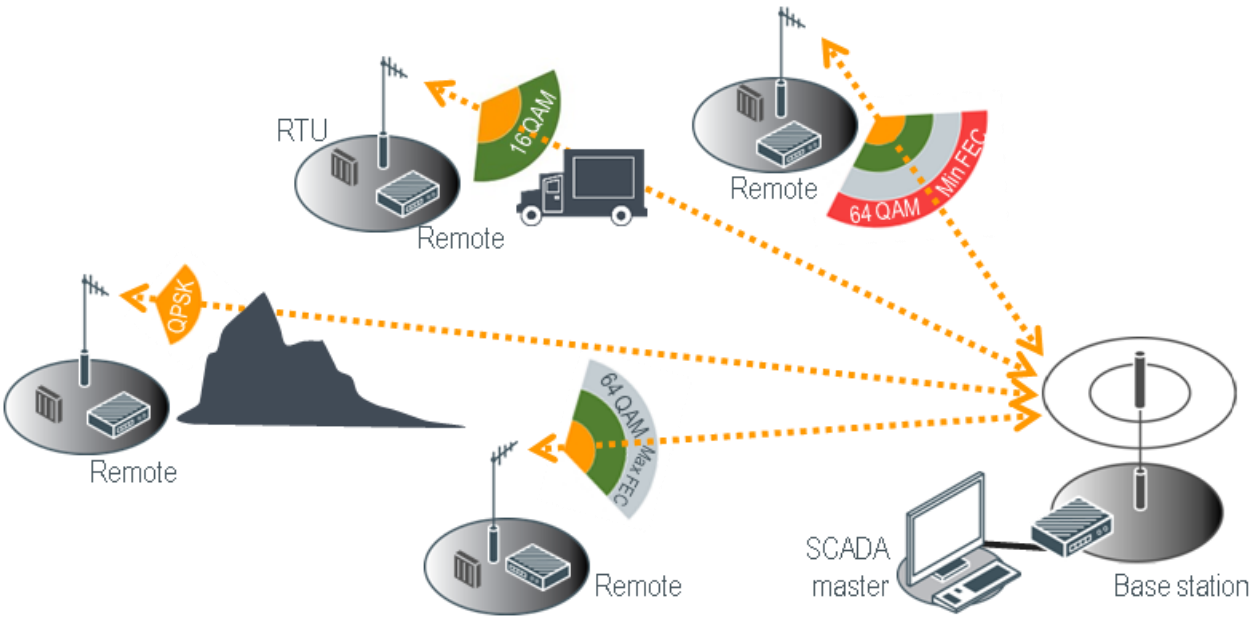

# Network Layer

## Packet Routing

Aprisa SR+ is a standard static IP router which routes and forwards IP packet based on standard IP address and routing table decisions.

Aprisa SR+ router mode (see figure below), enables the routing of IP packets within the Aprisa SR+ wireless network and in and out to the external router / IP RTUs devices connected to the Aprisa SR+ wired Ethernet ports.

Within the Aprisa SR+ Router mode, each incoming Ethernet packet on the Ethernet port is stripped from its Ethernet header to reveal the IP packet and to route the IP packet based on its routing table. If the destination IP address is one of the RTUs, the packet is then forwarded to the wireless ports and broadcasted as a PMP wireless packet to all the repeater / remotes stations. The appropriate remote then routes the IP packet and forwards it based on its routing table to the appropriate Ethernet port, encapsulating the appropriate next hop MAC header and forwarding it to the RTU. The RTU can then interpret and process the IP data and communication is established between the RTU and the initiating communication device.

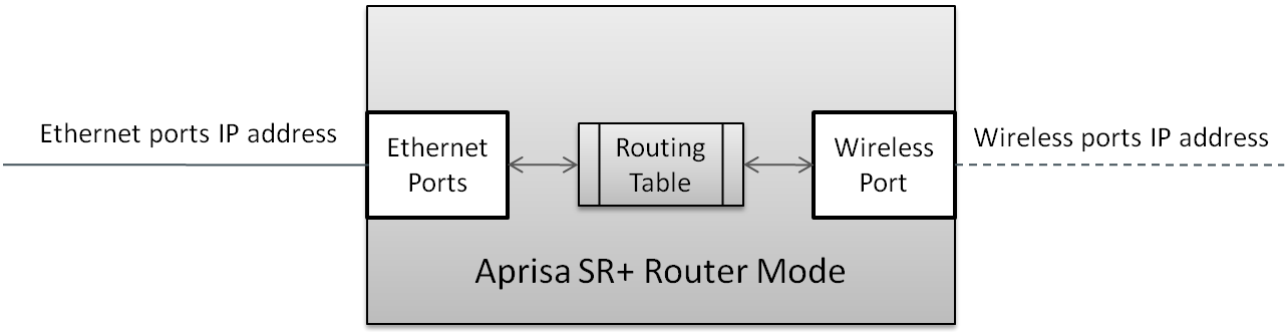

## Static IP Router

The Aprisa SR+ works in the point-to-multipoint (PMP) network as a standard static IP router with the Ethernet and wireless / radio as interfaces and serial ports using terminal server as a virtual interface.

The Aprisa SR+ static router is semi-automated operation, where the routing table is automatically created in the base station and populated with routes to all remotes and repeater stations in the network during the registration process and vice versa, where the routing table is automatically created in remote and repeater stations and populated with routes to base station during the registration process. Updates occur when remote is disconnected from network for any reason, with the routing table updated in a controlled fashion.

Also, in decommission operation, the base station routing tables are completely flushed allowing an automatic rebuild. This avoids the user manually inserting / removing of multiple static routes to build / change the routes in the network which might be tedious and introduce significant human error. The Aprisa SR+ works as a static IP router without using any routing protocol and therefore does not have the overhead of a routing protocol for better utilization of the narrow bandwidth network.

In addition to the semi-automated routes, the user can manually add / remove routes in the routing table for the radio interface, Ethernet Interface and for routers which are connected to the radio network.

The Aprisa SR+ base station is used as a gateway to other networks. Thus, a configurable IP address default gateway can be set using a static route in the routing table with a destination IP address of 0.0.0.0. It is used by the router when an IP address does not match any other routes in the routing table.

The Aprisa SR+ sub-netting rules distinguish between the wireless interface and the remote Ethernet interface where RTUs are connected. The entire wireless network is set on a single IP subnet, while each Aprisa SR+ remote's Ethernet interface is set to a different subnet network. In this way, the user can easily distinguish between the remotes subnet IP addresses.

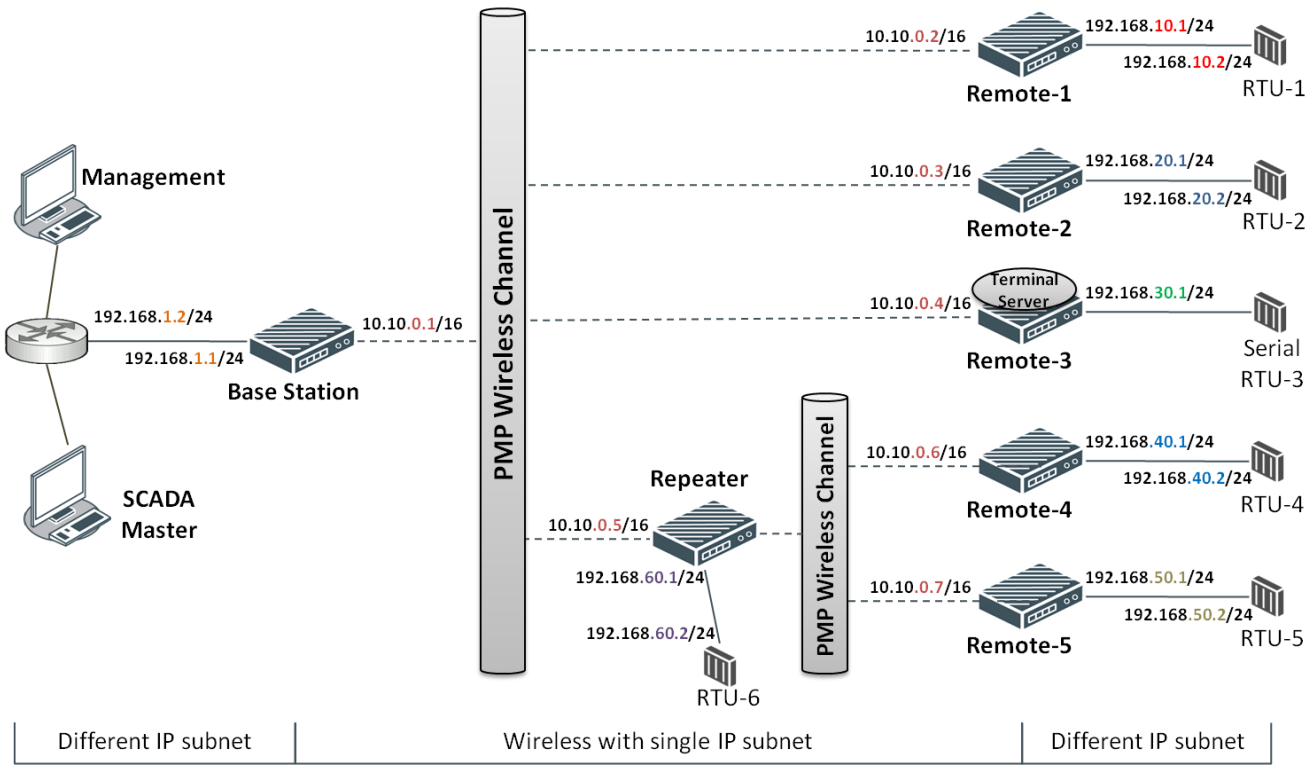

## Static IP Router – Human Error Free

To ensure correct operation, the Aprisa SR+ router base station alerts when one (or more) of the devices is not configured for router mode or a duplicated IP is detected when manually added.

When the user changes the base station IP address / subnet, the base station sends an ARP unsolicited announcement message and the remotes / repeaters auto-update their routing table accordingly. This also allows the router that is connected to the base station to update its next hop IP address and its routing table.

When the user changes the remote / repeater station IP address / subnet, a re-registration process in the base station then auto-updates its routing table accordingly.

## Terminal Server - Transition to Converged Ethernet / IP Network

Customers that are transitioning their SCADA network to an Ethernet / IP SCADA network, can simultaneously operate their legacy serial RTUs, not as a separate serial network to the new Ethernet / IP network, but as part of the Ethernet / IP network, by using the terminal server feature.

The Aprisa SR+ terminal server is an application running in the radio that encapsulates serial traffic into Ethernet / IP traffic. For SCADA networks, this enables the use of both serial and Ethernet / IP RTUs within an Ethernet / IP based SCADA network.

# Bridge Mode with VLAN Aware

## Ethernet VLAN Bridge / Switch Overview

The Aprisa SR+ in Bridge mode of operation is a standard Ethernet Bridge based on IEEE 802.1d or VLAN Bridge based on IEEE 802.1q/p which forward / switch Ethernet packet based on standard MAC addresses and VLANs using FDB (forwarding database) table decisions. VLAN is short for Virtual LAN and is a virtual separate network, within its own broadcast domain, but across the same physical network.

VLANs offer several important benefits such as improved network performance, increased security and simplified network management.

The Aprisa SR+ Bridge mode (see figure below), is the default mode of operation and it enables the switching / bridging of Ethernet VLAN tagged or untagged packets within the Aprisa SR+ wireless network and in and out to the external Industrial LAN network and RTUs devices connected to the Aprisa SR+ wired Ethernet ports or serial ports through the terminal server function.

Within the Aprisa SR+ Bridge mode, each incoming Ethernet packet is inspected for the destination MAC address (and VLAN) and looks up its FDB table for information on where to send the specific Ethernet frame. If the FDB table doesn't contain the specific MAC address, it will flood the Ethernet frame out to all ports in the broadcast domain and when using VLAN, the broadcast domain is narrowed to the specific VLAN used in the packet (i.e. broadcast will be done only to the ports which configured with that specific VLAN).

The FDB table is used to store the MAC addresses that have been learnt and the ports associated with that MAC address. If the destination MAC address is one of the RTUs, the packet is then forwarded to the wireless ports and broadcast as a PMP wireless packet to all the repeater / remote stations. The appropriate remote then switches the Ethernet packet and forwards it based on its FDB table (based on the MAC or VLAN & MAC) to the appropriate Ethernet port to the RTU. The RTU can then interpret and process the Ethernet / IP data and communication is established between the RTU and the initiating communication device.

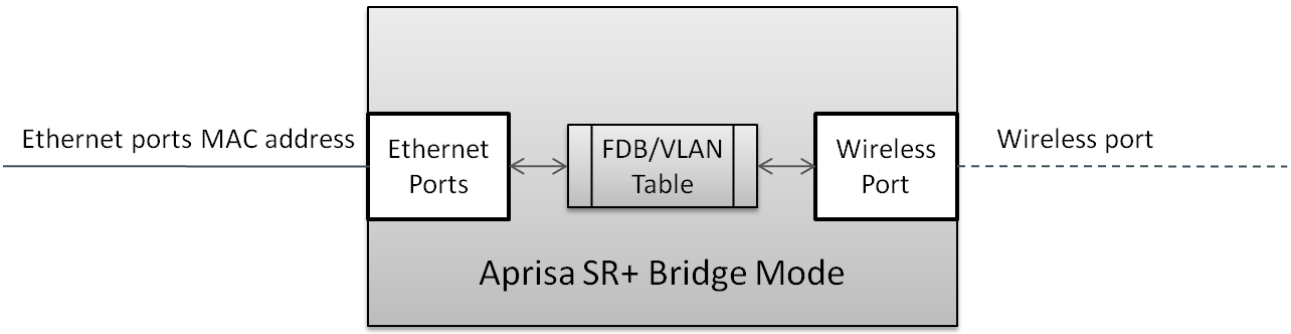

# VLAN Bridge Mode Description

## General – Aprisa SR+ VLAN Bridge

Aprisa SR+ works in the point-to-multipoint (PMP) network as a standard VLAN bridge with the Ethernet and wireless / radio as interfaces and serial ports using terminal server as a virtual interface.

The Aprisa SR+ is a standard IEEE 802.1q VLAN bridge, where the FDB table is created by the bridge learning / aging process. New MACs are learnt and the FDB table updated. Unused MACs are aged out and flushed automatically after aging period.

VLANs are statically configured by the user on the ports where a Virtual LAN is required across the radio network. An example of VLAN isolation of traffic type is shown in the figure below, where RTUs #1, 4 and 6 together with SCADA meter master form a Virtual LAN which is isolated from the other devices, even though they are on the same physical network. VLAN management can be used to manage with external NMS all the Aprisa SR+ devices on the radio network, and is automatically created with a VLAN ID = 1 default value. The VLAN ID can be changed by the user later on.

Each device in the Aprisa SR+ bridge is identified by its own IP address, as shown in the figure.

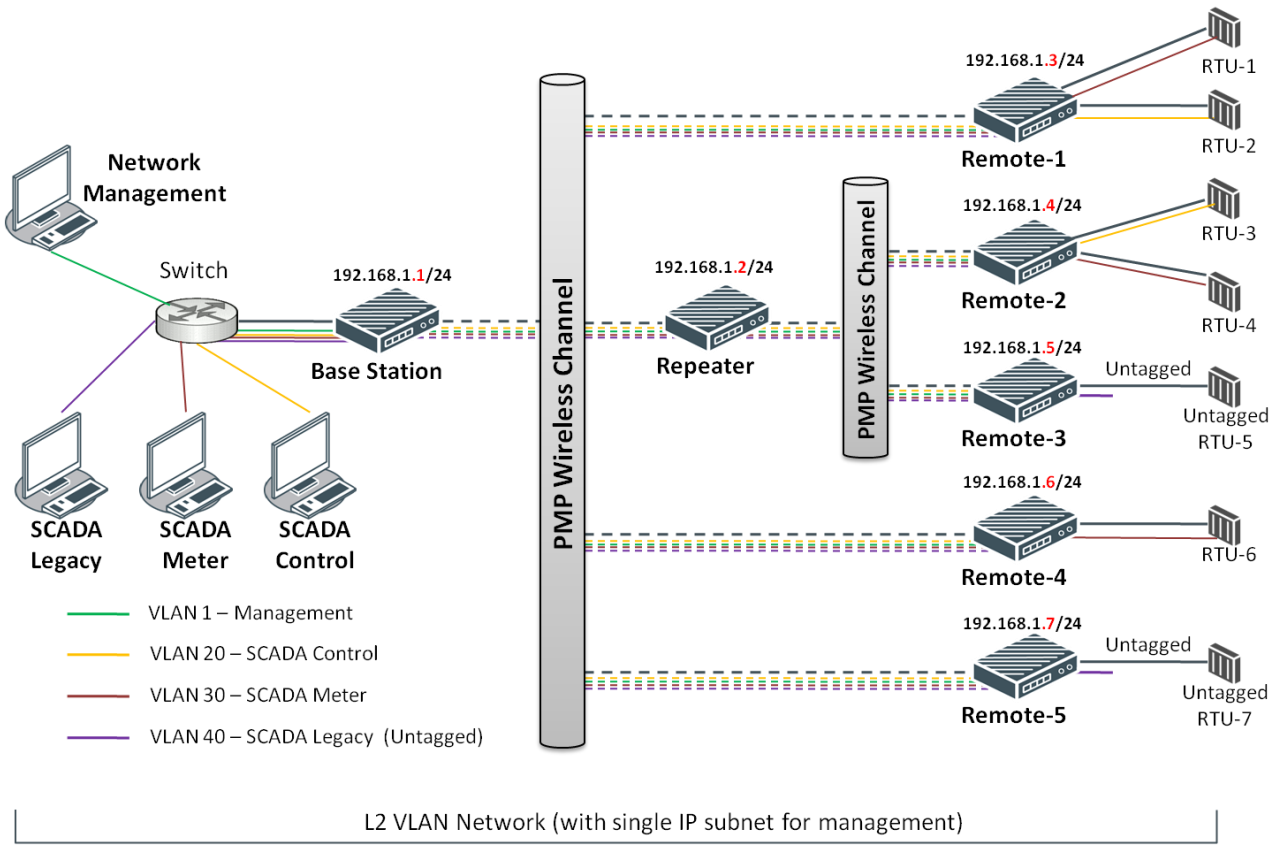

## VLANs – Single, Double and Trunk VLAN ports

The Aprisa SR+ supports single VLAN (CVLAN), double VLAN (SVLAN) and trunk VLAN.

A single VLAN can be used to segregate traffic type.

A double VLAN can be used to distinguish between Aprisa SR+ sub-networks (base-repeater-remote), where the outer SVLAN is used to identify the sub-network and the CVLAN is used to identify the traffic type. In this case, a double tagged VLAN will be forwarded across the Industrial LAN network and switched based on the SVLAN to the appropriate Aprisa SR+ sub-network. When packet enters the Aprisa SR+ network, the SVLAN will be stripped off (removed) and the forwarding will be done based on the CVLAN, so only a single VLAN will pass through over the radio network and double VLAN will be valid on the borders of the radio network.

Trunk VLAN is also supported by the Aprisa SR+ where the user can configure multiple VLANs on a specific Ethernet port, creating a trunk VLAN port. For example, in the above figure, a single trunk VLAN port is created between the switch and the Aprisa SR+ base station, carrying VLAN ID #1, 20, 30 and 40.

## VLAN Manipulation – Add / Remove VLAN Tags

In order to support double VLAN and different device types connected to the Aprisa SR+ e.g. switches, RTUs, etc, which can be VLAN tagged or untagged / plain Ethernet devices, add / remove VLAN manipulation is required.

In an Aprisa SR+ VLAN tagged network, a remote Aprisa SR+ connected to a plain RTU without VLAN support, will remove (strip-off) the VLAN tag from the packet before sending it to the RTU. On the other direction, when the RTU is sending an untagged packet, the Aprisa SR+ will add (append) an appropriate user pre-configure VLAN tag before sending it over the air to the base station. This is shown in the above figure on untagged RTU #5 and 7.

## QoS using VLAN

VLANs carry 3 priority bits (PCP field) in the VLAN tag allowing prioritization of VLAN tagged traffic types with 8 levels of priority (where 7 is the highest priority and 0 is the lowest priority). The Aprisa SR+ supports QoS (Quality of Service) where the priority bits in the VLAN tagged frame are evaluated and mapped to four priority levels and four queues supported by the Aprisa SR+ radio. Packets in the queues are then scheduled out in a strict priority fashion for transmission over-the-air as per the priority level from high to low.

# Avoiding Narrow Band Radio Traffic Overloading

The Aprisa SR+ supports mechanisms to prevent narrowband radio network overload:

1. L3/L4 Filtering

The L3 filtering can be used to block undesired traffic from being transferred on the narrow band channel, occupying the channel and risking the SCADA critical traffic. L3/4 filtering has the ability to block a known IP address and applications using TCP/IP or UDP/IP protocols with multiple filtering rules. The L3 (/L4) filter can block/forward (discard/process) a specific IP address and a range of IP addresses. Each IP addressing filtering rule set can also be set to filter a L4 TCP or UDP port/s which in most cases relates to specific applications as per IANA official and unofficial well-known ports. For example, filter and block E-mail SMTP or TFTP protocol as undesired traffic over the SCADA network. The user can block a specific or range of IP port addresses, examples SMTP (Simple Mail Transfer Protocol) TCP port 25 or TFTP (Simple Trivial File Transfer Protocol) UDP port 69.

2. L2 Address Filtering

L2 Filtering (Bridge Mode) provides the ability to filter radio link traffic based on specified Layer 2 MAC addresses. Destination MAC (DA) addresses and a Source MAC (SA) addresses and protocol type (ARP, VLAN, IPv4, IPv6 or Any type) that meet the filtering criteria will be transmitted over the radio link. Traffic that does not meet the filtering criteria will not be transmitted over the radio link.

3. L2 Port VLANs Ingress Filtering and QoS

Double VLAN (Bridge Mode)

Double VLAN is used to distinguish/segregate between different radio sub-networks (Base-repeaters-remotes). Traffic with double VLANs which are not destined to a specific sub-network will be discarded on the ingress of the radio sub-network, avoiding the overload of the radio sub-network.

Single VLAN (Bridge Mode)

Single VLAN is used to distinguish/segregate between different traffic types assigned by the user in its industrial corporate LAN. In order to avoid the overload of the radio network, traffic with single VLANs which are not destined to a specific radio network will be discarded on the Ethernet ingress port of the radio network. All single VLANs which set and are eligible will be transmitted over the radio link.

QoS using 802.1p priority bits (Bridge Mode)

The priority bits can be used in the VLAN tagged frames to prioritized critical mission SCADA traffic and assure SCADA operation related to any other unimportant traffic. In this case, traffic base on VLAN priority (priority 0 to 7) entered to one of the four priority queues of the Aprisa SR/SR+ (Very High, High, Medium and Low). Traffic leaves the queues (to the radio network) from highest priority to lowest in a strict priority fashion.

4. Ethernet port QoS

The Aprisa SR+ supports ‘Ethernet Per Port Prioritization’. Each Ethernet port can be assigned a priority and traffic shall be prioritized accordingly. This is quite useful in networks where customers do not use VLANs or cannot use 802.1p prioritization.

5. Ethernet Data and Management Priority and Background Bulk Data Transfer Rate

Alternatively to VLAN priority, users can control the Ethernet traffic priority (vs serial), management priority and rate in order to control the traffic load of the radio network, where important and high priority data (SCADA) will pass-through first assuring SCADA network operation. The user can set the use of the Ethernet Data Priority, which controls the priority of the Ethernet customer traffic relative to the serial customer traffic and can be set to one of the four queues. The Ethernet Management Priority controls the priority of the Ethernet management traffic relative to Ethernet customer traffic and can be set to one of the four queues. The Background Bulk Data Transfer Rate sets the data transfer rate (high, medium, low) for large amounts of management data.

6. Ethernet Packet Time to Live

Another aspect of avoiding overload radio network is the Ethernet packet TTL, which is used to prevent old, redundant packets being transmitted through the radio network. This sets the time an Ethernet packet is allowed to live in the system before being dropped if it cannot be transmitted over the air.

7. Robust Header Compression (ROHC) and Payload Compression

Aprisa SR+ supports ROHC (Robust Header Compression RFC3095). ROHC is a standard way to compress IP, UDP and TCP headers and this significantly increases IP traffic throughput especially in narrow band network.

Aprisa SR+ supports payload compression. A Lempel–Ziv (LZ) algorithm is used to efficiently compress up to 50% traffic with high percentage of repetitive strings. Both serial and Ethernet / IP payload traffic are compressed.

# Product Architecture

The following are the key components of the Aprisa SR+ design:

Dual high performance ΣΔ fractional-N synthesizers to allow for full duplex operation

- Wideband design electronically tunes over entire band
- Proven low noise and spurious technology with over 50dB of SNR easily achieved

Power amplifier linearity

- Unique temperature compensated pre-distortion system improves the efficiency and linearity of the entire transmitter chain for non-constant envelope modulation systems
- Simple IQ modulation line up reduces part count and improves MTBF
- No mixing stages so no spurious responses present at the transmitter output

Digital control loops used for controlling power amplifier current and transmit output power, allows for faster ramping and settling times with less error

- Tx turn-on time limited primarily by PA ramping
- Robust, closed-loop power control – fast, accurate power ramp up and down

Highly rugged N-Channel RF Power LDMOS transistors for the power amplifier

- High efficiency (>50% PAE at 10W)
- Very low thermal resistance (1.0°C/W)

Direct IQ down-conversion

- Excellent Intermodulation distortion characteristics as channel filter can be placed directly after the mixer without impacting noise figure
- Digital channel filtering allows for multiple bandwidths with the same hardware
- Low parts count and no crystal filters help to keep receiver performance extremely stable over temperature

Integrated heat sink

- Limits number of mechanical interfaces
- Fin design optimized for natural convection

Monitoring and software control

- Temperature control loop shuts down the transmitter when the temperature exceeds continuous operation at 70°C
- Monitoring of RSSI and PA current to ensure the RF hardware is functioning to specification

## Aprisa SR+ Radio Block Diagram

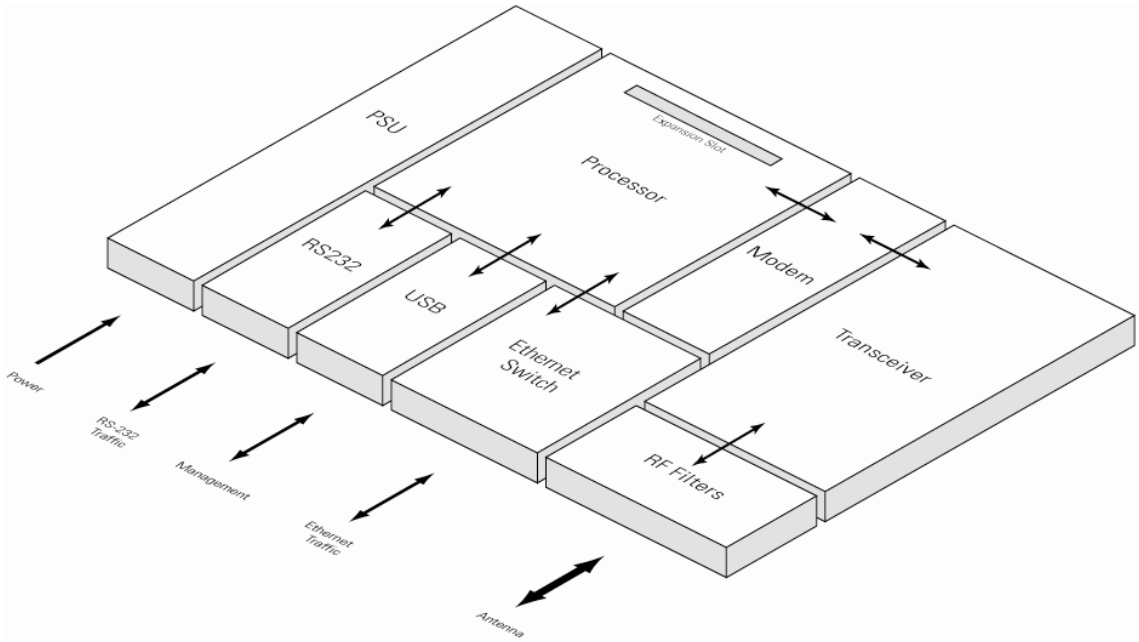


## Aprisa SR+ Protected Station Block Diagram

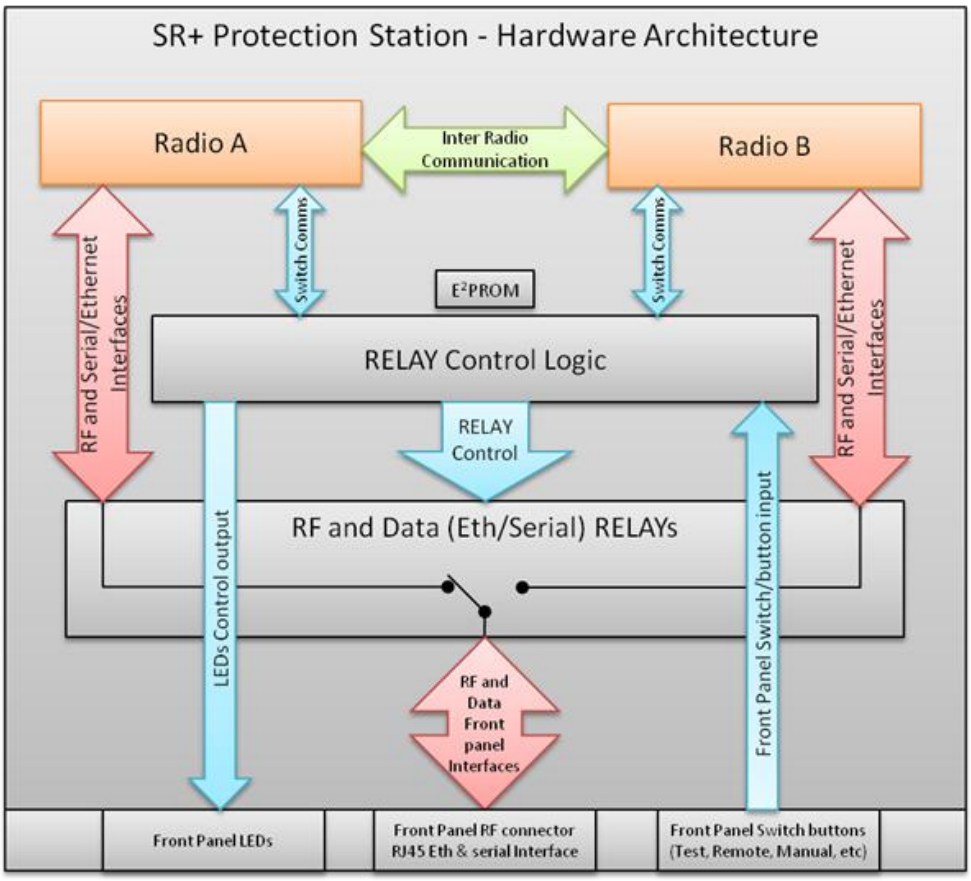

# 7. Contact Us

For further information or assistance, please contact Customer Support or your local 4RF representative. Our area representative contact details are available from our website:

4RF Limited
26 Glover Street, Ngauranga
PO Box 13-506
Wellington 6032
New Zealand

| | |
|---|---|
| Email address | support@4rf.com |
| Website | www.4rf.com |
| Phone number | +64 4 499 6000 |
| Fax number | +64 4 473 4447 |
| Attention | Customer Services |