Appendix I: Manual

The following user's manual is for typical host products for the RF module. There is no user's manual for the RF module itself.

Itowa

USER MANUAL

SYNTHESIZED SETS

Changes or modifications not expressly approved by ITOWA, SAU will void the user's authority to operate the equipment.

This equipment has been tested and found to comply with the limits for a Class B digital device, pursuant to Part 15 of the FCC rules. These limits are designed to provide reasonable protection against harmful interference in a residential installation. This equipment generates, uses and can radiate radio frequency energy and, if not installed and used in accordance with the instructions, may cause harmful interference to radio communications. However, there is no guarantee that interference will not occur in a particular installation.

This device complies with Part 15 of the FCC Rules. Operation is subject to the following two conditions:
1. this device may not cause harmful interference, and
2. this device must accept any interference received, including interference that may cause undesired operation.

If this equipment does cause harmful interference to radio or television reception, which can be determined by turning the equipment off and on, the user is encouraged to try to correct the interference by one or more of the following means:

1. Rotate or relocate the receiving antenna;
2. Increase the separation between the equipment and receiver;
3. Connect the equipment into an outlet on a circuit different from that to which the receiver is connected;
4. Consult the manufacturer customer service department for help.

MULTI-FREQUENCY SYNTHESIZED SETS

BOGGY, COMPACT, COMBI AND BETON

Versions:

- Conventional
- GCFI

ITOWA S.A.U.

IT IS FORBIDDEN TO FULLY OR PARTIALLY REPRODUCE THIS MANUAL, WITHOUT THE PRIOR WRITTEN AUTHORISATION FROM ITOWA.

IN THE EVENT OF INFRINGEMENT, ITOWA RESERVES THE RIGHT TO TAKE THE ACTION IT DEEMS NECESSARY, IN ACCORDANCE WITH CURRENT LAW.

ITOWA RESERVES THE RIGHT TO MODIFY THIS MANUAL WITHOUT PRIOR NOTIFICATION

MAUNIFIUSA

REV 6

XX-XX-XX

Approved by Engineering Manager: J. Varela

CONTENTS:

1. INTRODUCTION 1-1
2. GENERAL RULES FOR THE CORRECT AND SAFE USE OF THE RADIO CONTROL 2-1
3. DESCRIPTION OF THE SET 3-1
3.1. TRANSMITTER 3-1
3.1.1. COMPACT TRANSMITTERS 3-2
• TOWER CRANE 3-2
• OVERHEAD CRANE 3-3
3.1.2. BOGGY TRANSMITTERS 3-5
• TOWER CRANE 3-5
• OVERHEAD CRANE 3-6
3.1.3. COMBI TRANSMITTERS 3-8
• TOWER CRANE 3-8
• OVERHEAD CRANE 3-9
3.1.4. BETON TRANSMITTERS FOR CONCRETE PUMPS 3-10
• 3-JOYSTICK TRANSMITTER 3-10
• 2-JOYSTICK TRANSMITTER 3-11
3.2. RECEIVER 3-12
3.2.1. 16-RELAY RECEIVER 3-13
3.2.2. 24 AND 32-RELAY RECEIVER 3-13
3.3. BATTERY CHARGER 3-14
4. TECHNICAL SPECIFICATIONS 4-1
4.1. GENERAL SPECIFICATIONS 4-1
4.2. TRANSMITTER 4-2
4.3. RECEIVER 4-3
4.4. ACCESSORIES 4-4
4.4.1. COMPACT, COMBI, BETON AND BOGGY 4-4
5. INSTALLATION AND START-UP 5-1
5.1. INSTALLATION OF THE RECEIVER 5-1
5.2. POWER SUPPLY OF THE RECEIVER 5-1
5.3. START-UP 5-26. MAINTENANCE OF RADIO CONTROL SETS 6-1
6.1. MAINTENANCE OF THE TRANSMITTER 6-1
6.2. RECEIVER MAINTENANCE 6-1
6.3. MAINTENANCE OF THE CHARGER 6-2
6.4. CHARGING THE BATTERIES 6-2

7. TROUBLESHOOTING 7-1
8. QUICK GUIDE 8-1
8.1. POSSIBLE INCIDENTS AND SOLUTIONS 8-1
APPENDIXES A-1
A. DISPLAY MESSAGES A-1
B. USEFUL ADDRESSES B-1

1. INTRODUCTION

This manual is a guide to the correct use of the range of ITOWA multi-frequency remote control sets.

These sets have been specially designed for the wireless remote control of all types of electro-mechanical machinery.

FM frequency and FFSK codification are used for the radio transmission of control signals. The most advanced technology and the latest generation microprocessors have been incorporated in the electronic design. This means total safety when using the radio control.

To avoid unwanted manoeuvres, the system is provided with several safety mechanisms that are described further on. Manoeuvres are immediately blocked if any anomalies are automatically detected,

The system operates in the UHF frequency band, between the 902 and 928 MHz frequencies as stipulated in the telecommunications legislation FCC title 47, subpart 15,. At the moment, and for other ranges of frequencies, the system is certified in the following countries.

COUNTRIES	COMBI / BETON	BOGGY	COMPACT
GERMANY	D800517K		
BELGIUM	RTT / TI / X84		
CZECH REP.	CTU 2000 3 R1120		
SPAIN	08 98 00 75	08 99 00 77	08 99 00 76
FINLAND	FI98080090		
FRANCE	98 0170 PPL 0	98 0171 PPL 0	98 0169 PPL 0
GB	13397 13988		
NETHERLANDS	-	CEPT LPD NL	-
IRELAND	TRA 24/5/124		
ICELAND	IS-3025-00	IS-3024-00	IS-3025-00
ITALY	DGPGF/4/341244		
PORTUGAL	ICP-009TC-99	ICP-010TC-99	ICP-011TC-99
SOUTH AFRICA	SATRA		
SWEDEN	Ue970144		
SWITZERLAND	U4 33	-	-

CE 0341 TYPE CERTIFICATE

Please ask ITOWA for other certifications

GCFI VERSION

The GCFI (Intelligent Changing Frequency Management) version is provided with a smart system that follows the Frequency Hopping method specified in the subpart 15.247 of the FCC tittle 47. and that allows the equipment to use only the free frequerncies of the 902-928 MHz band.

2. GENERAL RULES FOR THE CORRECT AND SAFE USE OF THE RADIO CONTROL

For maximum safety when handling the radio control, the user must follow the rules described in this manual.

Whenever the crane has to be manoeuvred, the radio control operator must be in a place where he can view the whole manoeuvre being performed. If this is not possible, he should place himself where he can see as much of the manoeuvre as he can, and coordinate with another person when he cannot see. Never perform a manoeuvre which may be partially uncontrolled.

Do not leave the radio control transmitter on the ground or on metal blocks. If you must do so, activate the emergency stop (STOP BUTTON) of the radio control and turn the key or selector switch to the OFF position.

At the end of the working day, or if the radio control operator has to leave the radio control, he should activate the emergency stop (STOP BUTTON) of the radio control, turn the key or selector switch to the OFF position, place the battery in the charger for recharging and turn off the crane.

3. DESCRIPTION OF THE SET

The remote controls of the SYNTHESIZED range are made up of the following elements:

- TRANSMITTER
- RECEIVER
- BATTERIES
- CHARGER

3.1. TRANSMITTER

It is a sealed push button box (IP 65 protection) in highly resistant plastic material. The manoeuvre pushbuttons and display leds are in the front part. A housing for interchangeable batteries is provided at the back.

As indicated the block diagram (Fig. 3.1), the transmitter consists of three parts: push buttons, control circuit and UHF transceiver.

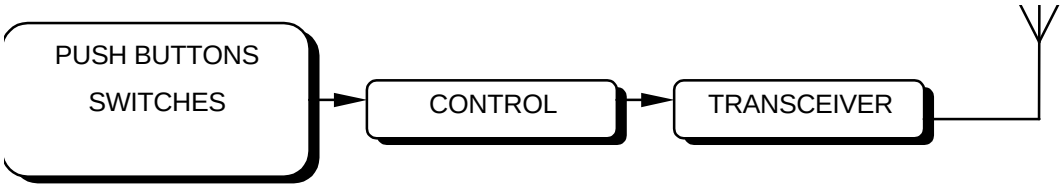

Fig. 3.1 Block diagram of the transmitter.

Orders from the push buttons are picked up by the microprocessor, which draws up the FFSK signal adding direction and control codes, and injects it to the UHF transmitter. The transmitter incorporates the signal of this order to the carrier frequency, which after filtering, will be transmitted by the antenna.

3.1.1. COMPACT TRANSMITTERS

• TOWER CRANE

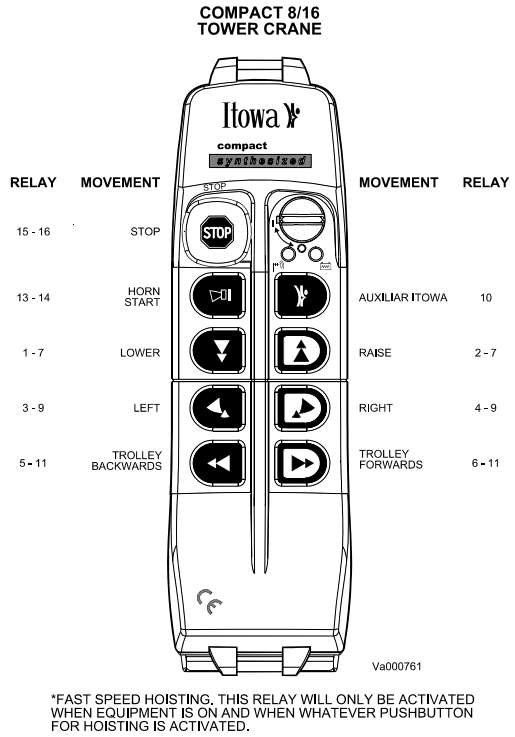

*FAST SPEED HOISTING. THIS RELAY WILL ONLY BE ACTIVATED WHEN EQUIPMENT IS ON AND WHEN WHATEVER PUSHBUTTON FOR HOISTING IS ACTIVATED.

Fig. 3.2 COMPACT 8/16, TOWER CRANE

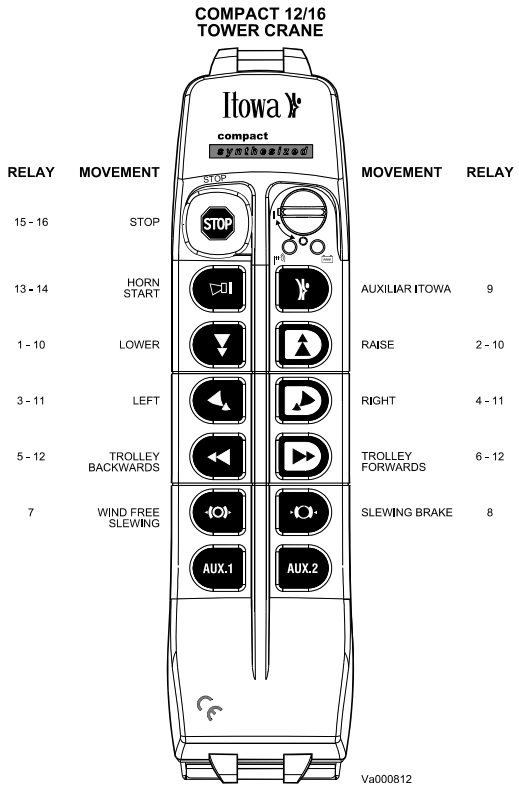

Fig. 3.3 COMPACT 12/16, TOWER CRANE

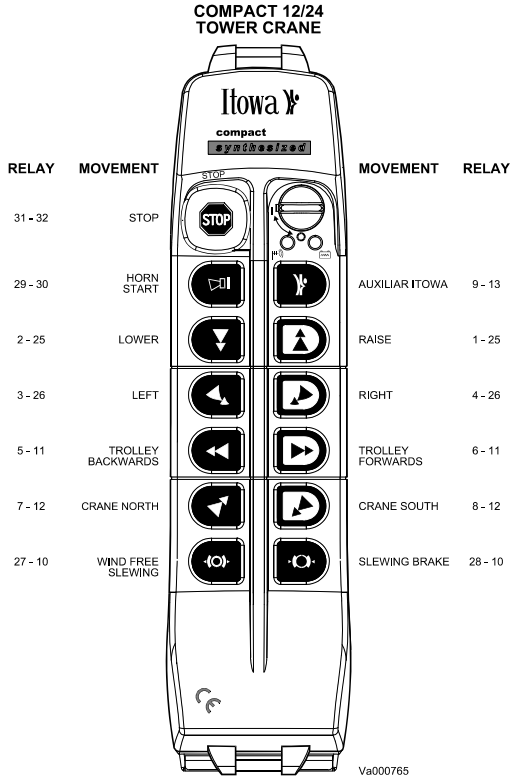

Fig. 3.4 COMPACT 12/24, TOWER CRANE

- **OVERHEAD CRANE**

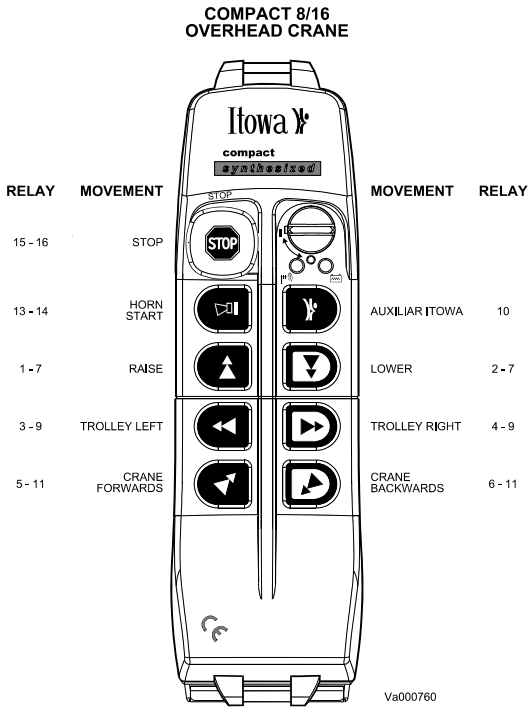

*FAST SPEED HOISTING. THIS RELAY WILL ONLY BE ACTIVATED WHEN EQUIPMENT IS ON AND WHEN WHATEVER PUSHBUTTON FOR HOISTING IS ACTIVATED.

Fig. 3.5 COMPACT 8/16, OVERHEAD CRANE

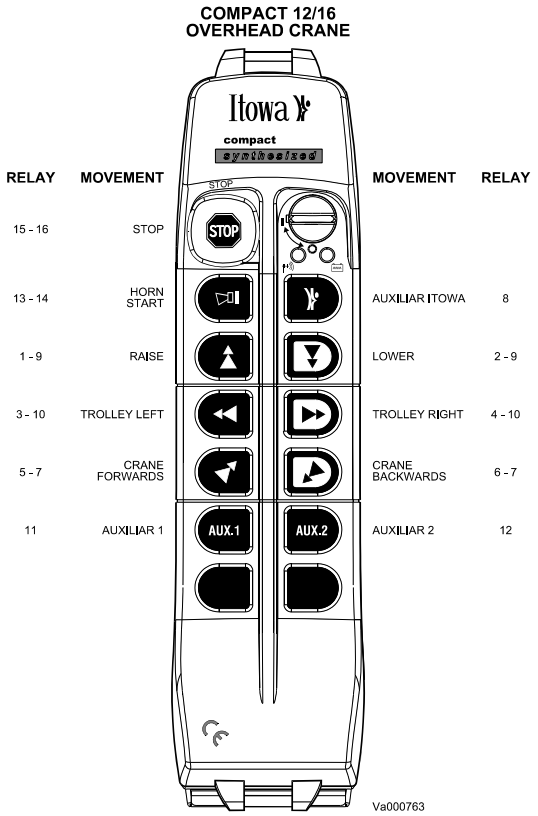

Fig. 3.6 COMPACT 12/16, OVERHEAD CRANE

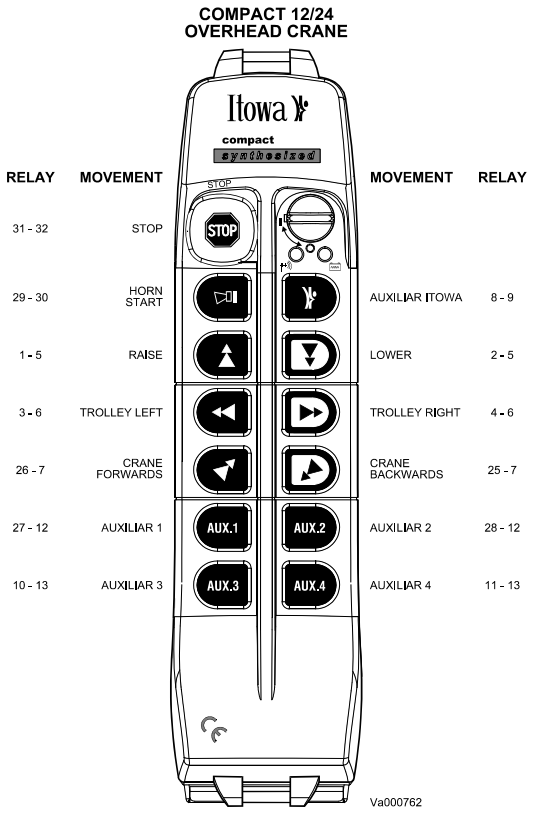

Fig. 3.7 COMPACT 12/24, OVERHEAD CRANE

3.1.2. BOGGY TRANSMITTERS

• TOWER CRANE

BOGGY 8/162
TOWER CRANE

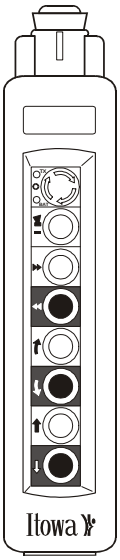

MOVEMENT	RELAY
STOP	15 - 16
START- HORN	14 - 13 - 12*
RAISE	1 - 9
LOWER	2 - 9
RIGHT	3
LEFT	4
TROLLEY BACKWARDS	5
TROLLEY FORWARDS	6

Va000874

*FAST SPEED HOISTING. THIS RELAY WILL ONLY BE ACTIVATED WHEN EQUIPMENT IS ON AND WHEN WHATEVER PUSHBUTTON FOR HOISTING IS ACTIVATED.

Fig. 3.8 BOGGY 8/162, TOWER CRANE

BOGGY 12/16
TOWER CRANE

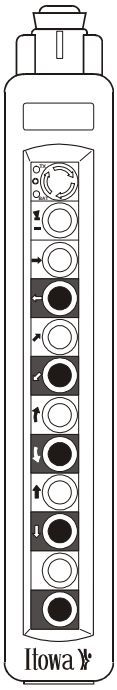

MOVEMENT	RELAY
STOP	15 - 16
START - HORN	14 - 13
LOWER	1
RAISE	2
CRANE NORTH	3
CRANE SOUTH	4
RIGHT	5
LEFT	6
TROLLEY BACKWARDS	7
TROLLEY FORWARDS	8
AUXILIAR 1	9
AUXILIAR 2	10

Va000767

Fig. 3.9 BOGGY 12/16 TOWER CRANE

BOGGY 12/164
TOWER CRANE

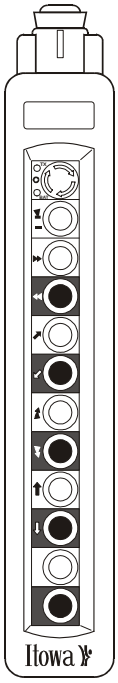

MOVEMENT	RELAY
STOP	15 - 16
START - HORN	14 - 13
LOWER	1 - 11
RAISE	2 - 11
CRANE NORTH	3
CRANE SOUTH	4
RIGHT	5 - 12
LEFT	6 - 12
TROLLEY BACKWARDS	7
TROLLEY FORWARDS	8
AUXILIAR 1	9
AUXILIAR 2	10

Fig. 3.10 BOGGY 12/164, TOWER CRANE

- **OVERHEAD CRANE**

BOGGY 8/16
OVERHEAD CRANE

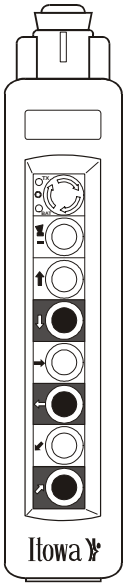

MOVEMENT	RELAY
STOP	15 - 16
START - HORN	14 - 13 - 12*
RAISE	1
LOWER	2
TROLLEY RIGHT	3
TROLLEY LEFT	4
CRANE NORTH	5
CRANE SOUTH	6

*FAST SPEED HOISTING. THIS RELAY WILL ONLY BE ACTIVATED WHEN EQUIPMENT IS ON AND WHEN WHATEVER PUSHBUTTON FOR HOISTING IS ACTIVATED.

Va000769

Fig. 3.11 BOGGY 8/16, OVERHEAD CRANE

BOGGY 8/166
OVERHEAD CRANE

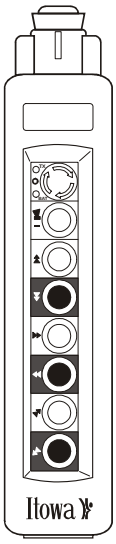

MOVEMENT	RELAY
STOP	15 - 16
START - HORN	14 - 13 - 12*
RAISE	1 - 9
LOWER	2 - 9
TROLLEY RIGHT	3 - 10
TROLLEY LEFT	4 - 10
CRANE NORTH	5 - 11
CRANE SOUTH	6 - 11

*FAST SPEED HOISTING. THIS RELAY WILL ONLY BE ACTIVATED WHEN EQUIPMENT IS ON AND WHEN WHATEVER PUSHBUTTON FOR HOISTING IS ACTIVATED

Va000876

Fig. 3.12 BOGGY 8/166, OVERHEAD CRANE

3.1.3.COMBI TRANSMITTERS

• TOWER CRANE

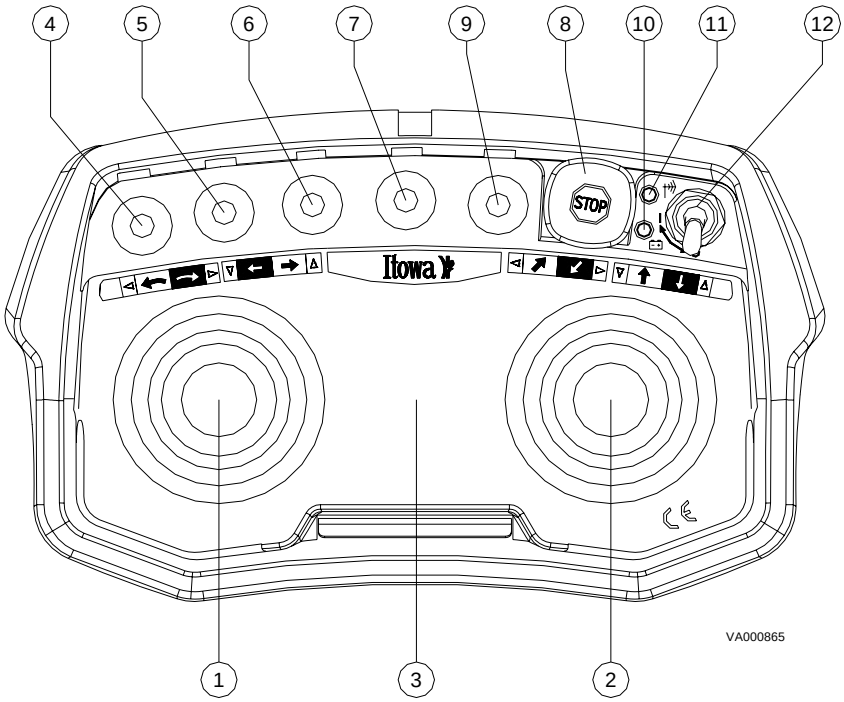

Fig. 3.13. COMBI TRANSMITTER FOR TOWER CRANE

(The manoeuvres indicated in the table are just a guideline. Manoeuvres can be changed from one supply to another in accordance with customers' requirements)

TOWER CRANE					
Nº	**MEANING**		**Nº**	**MEANING**	
1	Joystick	Right Left Trolley Backwards Trolley Forwards	2	Joystick	Crane North Crane South Raise Lower
3	Combi-Synthesized Box		4	Slewing brake push button	
5	Auxiliary push button		6	Horn push button	
7	Start button		8	Emergency stop button	
9	On/off travelling button*		10	Low battery led	
11	Transmitter led		12	On/off selector switch	

*As a safety measure, bearing in mind the danger of the manoeuvre, switch no. 9 for tower crane controls, must be in the ON position to enable the Travelling manoeuvre.

• **OVERHEAD CRANE**

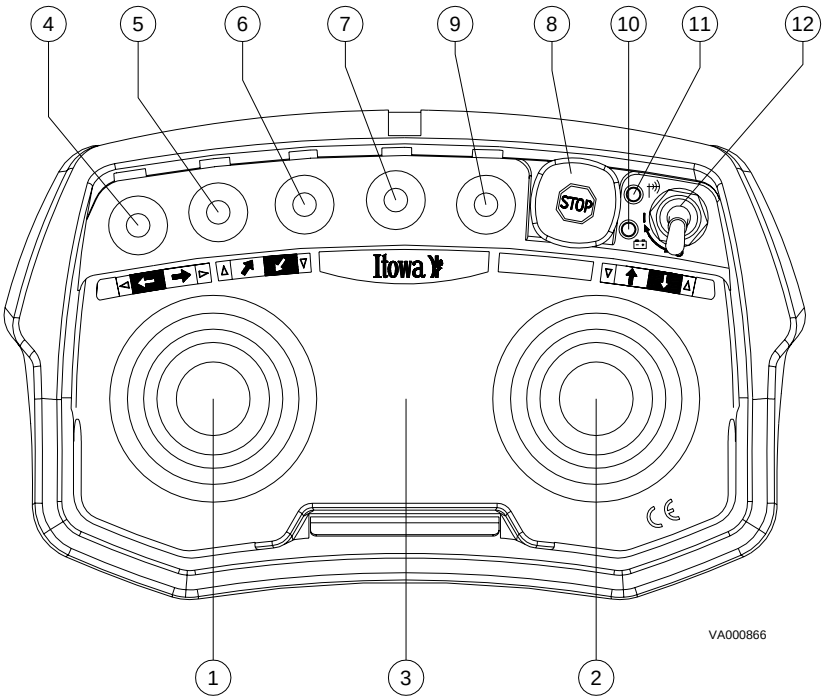

Fig. 3.14. COMBI TRANSMITTER FOR OVERHEAD CRANE

(The manoeuvres indicated in the table are just a guideline. Manoeuvres can be changed from one supply to another in accordance with customers' requirements)

OVERHEAD CRANE					
Nº	**MEANING**		**Nº**	**MEANING**	
1	Joystick	Trolley Right Trolley Left Crane Forwards Crane Backwards	2	Joystick	Lower Raise
3	Combi-Synthesized Box		4	Auxiliary push button	
5	Auxiliary push button		6	Horn push button	
7	Start button		8	Emergency stop button	
9	Null		10	Low battery led	
11	Transmission led		12	On/off selector switch	

3.1.4. BETON TRANSMITTERS FOR CONCRETE PUMPS

• 3-JOYSTICK TRANSMITTER

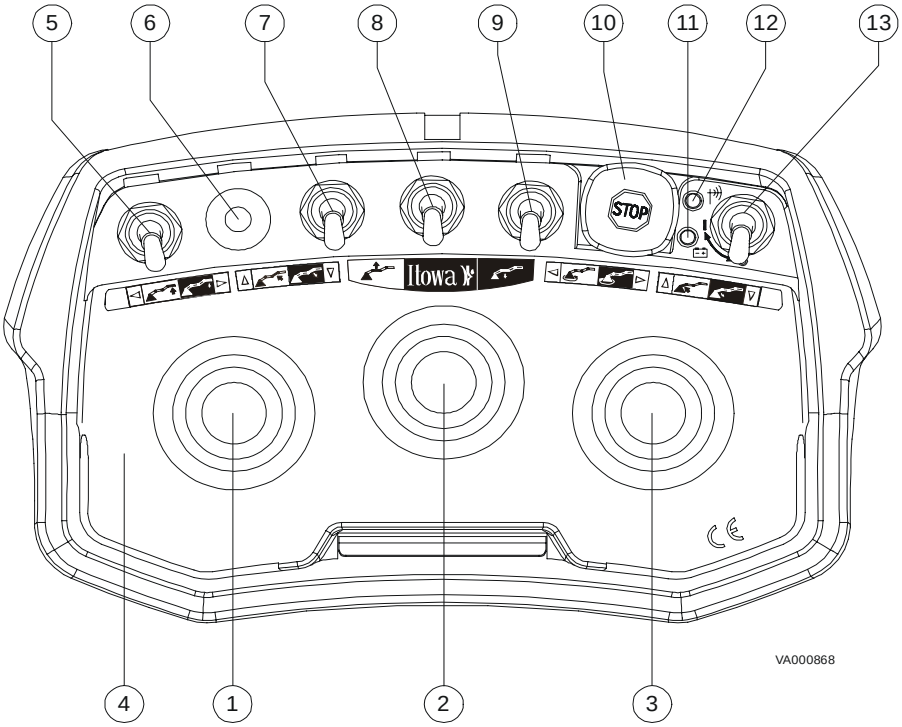

Fig. 3.15. 3-JOYSTICK BETON TRANSMITTER

(The manoeuvres indicated in the table are just a guideline. Manoeuvres can be changed from one supply to another in accordance with customers' requirements)

CONCRETE PUMP					
Nº	**MEANING**		**Nº**	**MEANING**	
1	Joystick	Raise arm 4 Lower arm 4 Raise arm 3 Lower arm 3	2	Joystick	Lower arm 2 Raise arm 2
3	Joystick	Right Left Raise arm 1 Lower arm 1	4	Beton-Synthesized box	
5	Returnable switch (increases and reduces r.p.m.)		6	Start push button	
7	Pumping/reverse returnable switch		8	Horn returnable switch	
9	Auxiliary switch		10	Emergency push button	
11	Low battery led		12	Transmission led	
13	ON/OFF selector switch				

• **2-JOYSTICK TRANSMITTER**

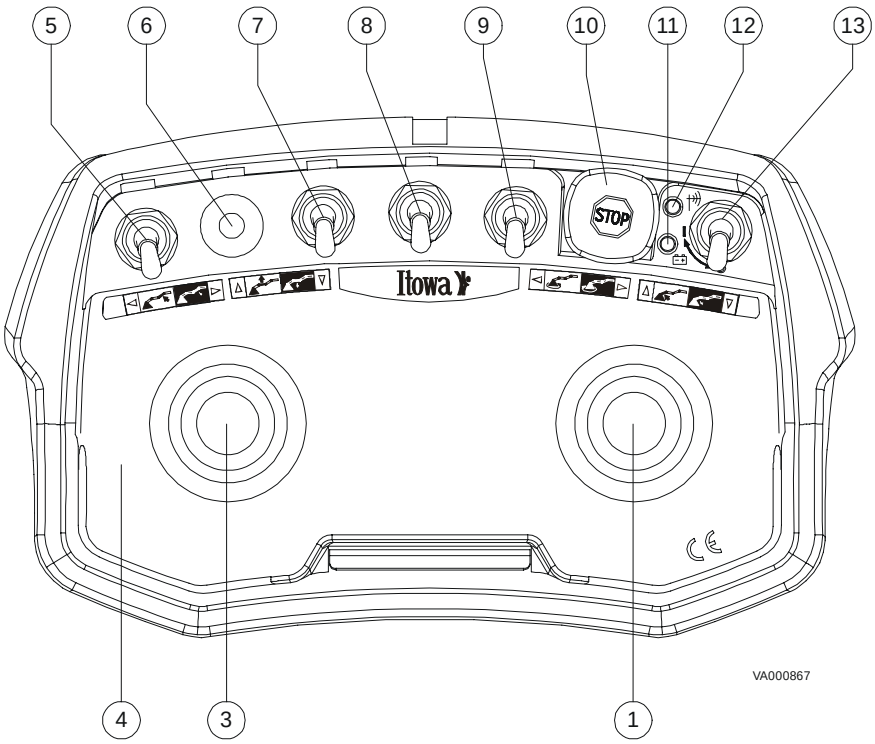

Fig. 3.16. 2-JOYSTICK BETON TRANSMITTER

(The manoeuvres indicated in the table are just a guideline. Manoeuvres can be changed from one supply to another in accordance with customers' requirements)

CONCRETE PUMP					
Nº	**MEANING**		**Nº**	**MEANING**	
1	Joystick	Right Left Lower arm 1 Raise arm 1	3	Joystick	Raise arm 2 Lower arm 2 Raise arm 3 Lower arm 3
4	Beton-Synthesized box		5	Returnable switch (increases and reduces r.p.m.)	
6	Start button		7	Pumping/reverse returnable switch	
8	Horn returnable switch		9	Auxiliary switch	
10	Emergency stop button		11	Low battery led	
12	Transmission led		13	ON/OFF selector switch	

3.2. RECEIVER

The receiver unit consists of a cabinet in which the various electronic systems are located to receive orders and activate / deactivate the corresponding relays for each manoeuvre of the crane.

The receiver unit can be divided into three blocks (Fig. 3.17), transceiver, control circuit and relay circuit.

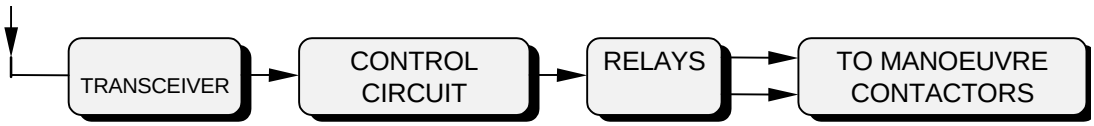

Fig. 3.17 Block Diagram of the receiver

The signal received by the antenna is injected to the receiver, which supplies a low frequency signal in FFSK code to the micro-processor. The control module checks that the information received is free of errors, and then draws up the corresponding orders to activate the relay.

In the event of anomalies in the working order of hardware or software, there are specific circuits in the control circuit, that deactivate the radio control work manoeuvres.

For greater safety, all surveillance circuits are doubled.

3.2.1. 16-RELAY RECEIVER

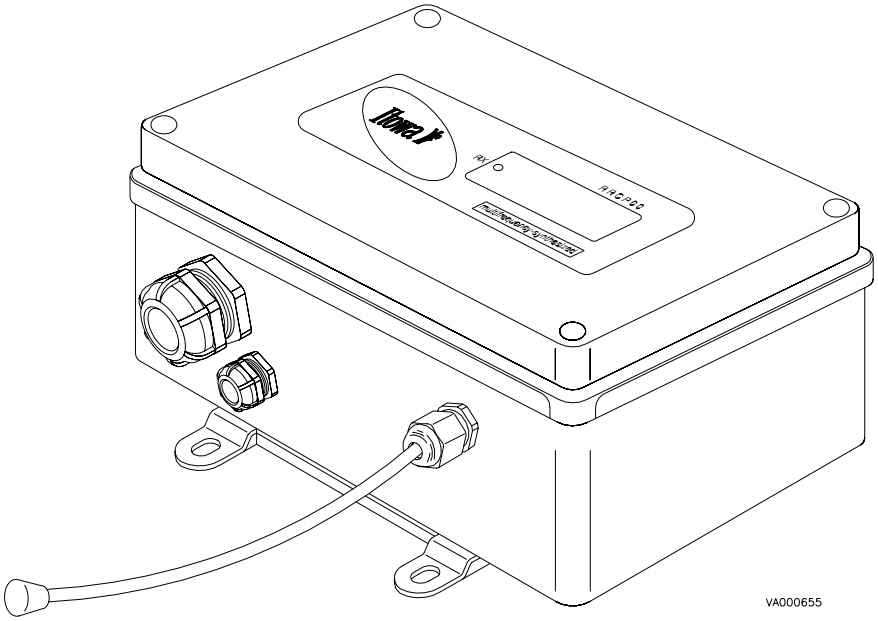

Fig. 3.18. 16-relay receiver

3.2.2. 24 AND 32-RELAY RECEIVER

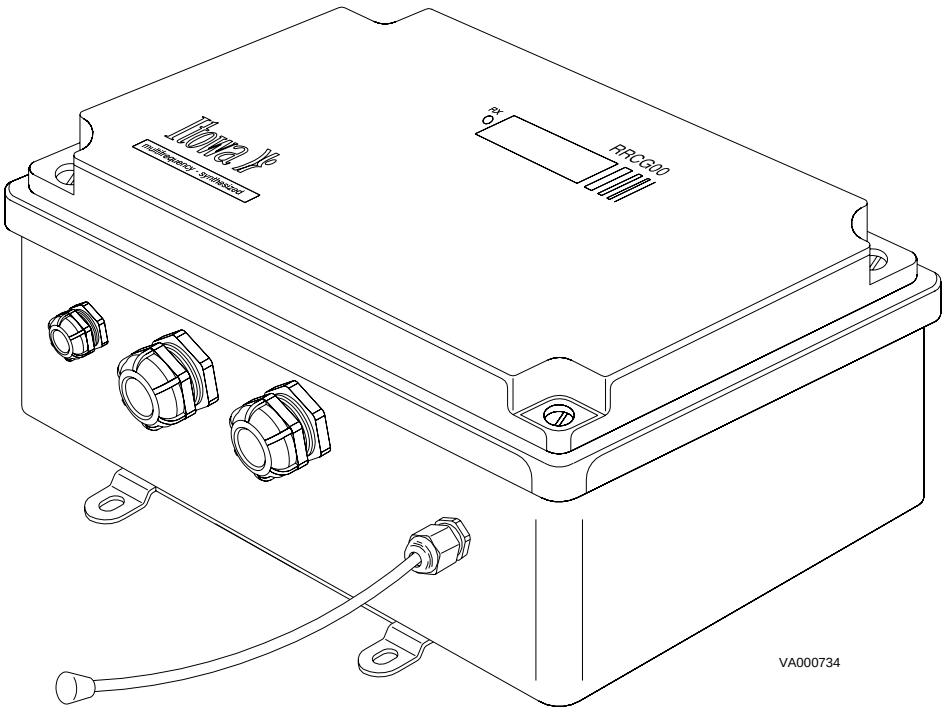

Fig. 3.19. 24 and 32-relay receiver

3.3. BATTERY CHARGER

The ITOWA battery charger can quickly and safely charge Ni-MH and Ni-Cd batteries. The batteries supplied are in Ni-MH, from which the charger extracts their maximum power. The charger is capable of detecting faulty batteries, short circuits or overheating, and can recuperate batteries that have been flat for a long time.

The battery charger has two display leds, one for power supply indicating that the unit is connected to the mains, and the other indicating that the batteries are being charged. When the battery is inserted, the charger starts charging without checking the battery for 20 minutes. After this time, the battery charger checks the battery status and charges accordingly for each battery. The end of the process is indicated when the charge display led turns off. Complete charging lasts less than 8 hours. For safety, the maximum charging time is limited to 12 hours.

The charging process should be done at a temperature between –10ºC and 50ºC. If , after the initial 20 minutes, the charge display led continues flashing, it means that charging is not being done correctly, either because the temperature is wrong, or because the battery is too flat. In this case, the charger will perform a slow safety pre-charging process in to order to recondition the battery if possible, during with time the charging led will flash. Once this is over , it will continue with the normal charging process.

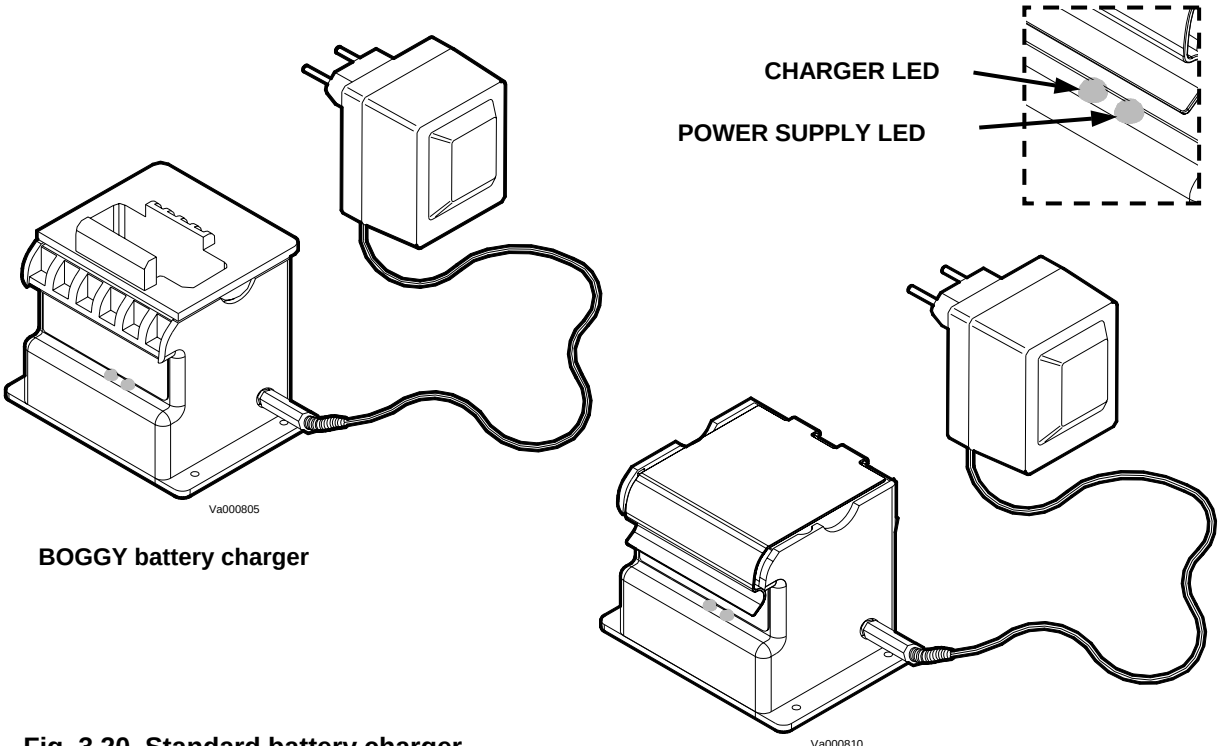

BOGGY battery charger

COMPACT, COMBI and BETON battery charger.

Fig. 3.20. Standard battery charger

4. TECHNICAL SPECIFICATIONS

4.1. GENERAL SPECIFICATIONS

MANUFACTURER	INVESTIGATION TOTAL WARE S.A.U.
TYPE	MULTI-FREQUENCY
FREQUENCY	ISM-BAND
NUMBER OF ORDERS	32
POSSIBILITY OF WRONG MANOEUVRE	10^{-18}
HAMMING DISTANCE	≥6
PROGRAMMABLE CODE	16777216
ORDER RESPONSE TIME	<50 ms
ACTIVE EMERGENCY TIME	<50 ms
PASSIVE EMERGENCY TIME	1900 ms
RADIUS OF ACTION	120 metres

4.2. TRANSMITTER

Frequency band:		FCC Tittle 47 902 to 928 MHz
Channelling:		25 kHz
Modulation:		FM
Maximum transmission power:		60 mW P.R.A
Coding:		FFSK
Stability in frequency:		± 2.5 ppm (-30ºC a +70ºC)
Attenuation of harmonics:		> 70 dB
Consumption in transmission:		80 mA
Consumption in stand-by:		< 800 µA
Power supply:		Removable battery Ni-MH, 7.2 V; 1.5 A/h
Endurance:		11 hours + 30 minutes reserve
Temperature range:		From -20ºC to +70ºC
Material:	BETON	Polyamide 6-6, 15 % fibre glass
	BOGGY	P.E.T.
	COMBI	Polyamide 6-6, 15 % fibre glass
	COMPACT	Polyamide 6-6, 30 % fibre glass
Approximate weight (without batteries)	BETON	1,8 kg
	BOGGY 8	1,1 kg
	BOGGY 12	1,5 kg
	COMBI	1,5 kg
	COMPACT 8	0,5 kg
	COMPACT 12	0,6 kg
Weight of battery		200 g
Measurements:	BETON	272 x 167 x 142 mm
	BOGGY 8	400 x 80 x 65 mm
	BOGGY 12	535 x 92 x 65 mm
	COMBI	272 x 167 x 142 mm
	COMPACT 8	265 x 80 x 68 mm
	COMPACT 12	315 x 80 x 68 mm

4.3. RECEIVER

Frequency band:		FCC Tittle 47 902 to 928 MHz	
Sensitivity:		0.3 μV	
Image frequency rejection:		>65 dB	
Protection against intermodulation:		>65 dB	
Adjacent channel rejection:		>65 dB	
Relays:		Resistive load:	5 A + 5 A at 250 Vac or 30 Vdc
		Inductive load (cosØ=0.4):	2 A at 250 Vac or 3 A at 30 Vdc
		Maximum operation voltage:	380 Vac , 125 Vdc
		Minimum admissible load:	10 mA at 5 Vdc
Number of switchings:		Resistive load:	10^6 manoeuvres 2 A at 250 Vac or 30 Vdc
		Inductive load (cosØ=0.4):	10^6 manoeuvres 1.2A at 250 Vac or 30 Vdc
Power supply:		48 Vac / 115 Vac / 230 Vac (-20% +15%) according to EN 60047-5-1	
Max. consumption:	16 Relays:	0,7 A / 0,29 A / 0,14 A	
	32 Relays:	0,9 A/ 0,35 A / 0,18 A	
Fuses:		Transformer primary:	1 A / 230V ; 2 A / 115V ; 4 A / 48V
		Transformer secondary:	4 A
		Safety output:	8 A
Dimensions:	16 Relays:	Inside:	240 x 190 x 90 mm
		Outside:	255 x 200 x 95 mm
	32 Relays:	Inside:	300 x 220 x 115 mm
		Outside:	315 x 235 x 120 mm
Weight:		16 Relays:	2,8 kg
		32 Relays:	4,2 kg
Protection:			IP 65

4.4. ACCESSORIES

4.4.1. COMPACT, COMBI, BETON AND BOGGY

BETON sets do not have a transformer and are only supplied at 24 Vdc.

• TRANSFORMER (EXCEPT MODEL BETON)

Power supply:	230 Vac / 14 Vdc
Consumption:	3,6 VA
Weight	0,35 kg

• BATTERY CHARGER

Power supply:	14 Vdc / 24 Vdc
Consumption:	0,4 A
Power:	6 W
Load intensity:	120 mA
Loading time:	8 hours
Box:	Polyamide 6-6, 15% fibre glass
Protection:	IP30
Dimensions:	73 x 69 x 72 mm
Approximate weight:	0,2 kg

5. INSTALLATION AND START-UP

5.1. INSTALLATION OF THE RECEIVER

The control receiver should be installed in a vertical position, fastened to the structure of the machine, with the antenna directed to the floor, and in a protected place so that when working, it does not get knocked.

ATTENTION IT IS IMPORTANT TO PROPERLY CLOSE THE COVER OF THE RECEIVER TO ENSURE SEALING, AS WATER LEAKING INSIDE MAY DAMAGE THE RECEIVER. THE GUARANTEE DOES NOT COVER ANY BREAKDOWNS CAUSED BY INCORRECTLY CLOSING THE COVER.

It is recommended to connect the set with a standard multi-cable flexible hose used to connect push button boxes by cable. This hose will be connected to the set at one end, and the other will be connected to a multi-pole connector identical to the one used by the machine to interconnect with a push button box by cable. This enables the remote control or the cable control to be interchanged simply by connecting or disconnecting the flexible hose.

ATTENTION: THE HORN RELAY SHOULD NOT BE CONNECTED TO CONTROL ANY OTHER MANOEUVRE UNLESS OTHERWISE INDICATED.

The common manoeuvre lead should have a suitable diameter, not over 2.5 mm. nor less than 1.5 mm., nor should two 0.75 cables be placed. The common manoeuvre lead should not, under any circumstances, be less than the diameter of the manoeuvre leads.

5.2. POWER SUPPLY OF THE RECEIVER

ATTENTION: CONNECTIONS SHOULD BE MADE SO THAT WHEN THE GENERAL SWITCH IS TURNED OFF, THE REMOTE CONTROL RECEIVER IS ALSO TURNED OFF.

The receiver can be connected to three different alternating voltages (230 Vac, 115 Vac, or 48 Vac) , except the BETON receiver that connects to a set voltage of 24 Vdc, through a three-position selector located inside the set. It is essential to ensure that the selector is in the correct position in accordance with the voltage to be supplied to the receiver, before connecting the set. All receivers leave the factory with the voltage pre-set at 115 Vac and 1A, but as a precautionary measure, it is advisable to check that the voltage is correctly selected.

.A three-wire 0.75 mm^2 section cable should be used to connect to the mains, connecting two cables to voltage and the third to earth (green-yellow).

5.3. START-UP

d and when the
of the receiver
which could be
(depending on the frequency band). The receiver is now ready to operate and receive manoeuvres from the transmitter.

```
ITOWA S.A
RRC16
```

```
ITOWA S.A
RRC32
```

Insert a charged battery and switch off the emergency stop button (STOP BUTTON). When the START push button is pressed, the remote control will start to operate by turning on the stop and start relays, and the general contactor will be interlocked. The TX ON led will turn on indicating that the remote control is working correctly. From now on, if any push button is pressed, the corresponding manoeuvre will be activated. The manoeuvre selected will continue to be activated while the push button remains pressed. The receiver display indicates the activated relays with a I and the deactivated relays with a 0 .

```
     0  0  0  0  0
0  0  0
```

```
0000000000000000
```

In order to keep the radio channel free and stop the operator from leaving the machine turned on when it is not being used, the remote control is supplied with an automatic stop system. This system starts operating after 180 seconds from when the last manoeuvre was performed, indicating the following message in the display:

```
ITOWA S.A
RRC16
```

```
ITOWA S.A
RRC32
```

To restart the transmitter, press the START button.

To turn off the transmitter, press the STOP BUTTON.

The emergency stop is activated by pressing the STOP BUTTON. This will turn off the stop relays and the remote control. In this situation, all relays that were on will be turned off and the initial message will be indicated on the LCD display.

```
ITOWA S.A
RRC16
```

```
ITOWA S.A
RRC32
```

ATTENTION: REMEMBER THAT ACTIVATING THE STOP BUTTON IS THE SAME AS STOPPING THE REMOTE CONTROL. THIS MEANS THAT ANY RELAY OF THE RECEIVER THAT WAS ACTIVATED IS IMMEDIATELY TURNED OFF.

The remote control is supplied with an indicator led of the state of the battery. When it detects that the battery is at a certain discharging level (in reserve), the BAT OK led starts to flash and the horn relay turns on intermittently. After approximately half an hour, the transmitter turns off and the battery led stays on permanently.

When the battery is in reserve, it is recommended to replace it with the second battery and insert the first one to charge. Under normal conditions, the batteries can work for 11 hours plus 30 minutes reserve time.

PLEASE FULLY CHARGE THE BATTERIES BEFORE USING THE EQUIPMENT FOR THE FIRST TIME

6. MAINTENANCE OF RADIO CONTROL SETS

The equipment you have purchased is manufactured using top quality materials ensuring perfect working order and operation of the remote control. Similarly to all machinery or equipment, the remote control requires minimum basic maintenance tasks that should be performed. In order to increase the life span of the apparatus, we advise you to carefully follow these preservation and maintenance recommendations.

As a general rule, it is advisable to periodically service the sealing devices that protect both the receiver and transmitter from weathering. Servicing should be carried out by an ITOWA authorised Technical Assistance Service, as incorrect sealing may cause irreparable damage to the equipment.

6.1. MAINTENANCE OF THE TRANSMITTER

ATTENTION: BEFORE HANDLING THE TRANSMITTER, TURN OFF THE GENERAL SWITCH OF THE MACHINE

The remote control requires minimum maintenance. The good condition of the transmitter should be checked paying special attention to joints and rubber protections of the push buttons. The silicone caps of the push buttons should be replaced if they have been cut or damaged as a result of incorrect use of the apparatus.

ATTENTION: DAMAGED RUBBER OF PUSH BUTTONS SHOULD BE REPLACED IMMEDIATELY, OTHERWISE WATER MAY DAMAGE THE TRANSMITTER.

6.2. RECEIVER MAINTENANCE

Maintenance of the receiver is identical to the transmitter. The following parts must be checked:

- The antenna connection (check that it is clean and free of rust).
- The connection between the receiver and electrical equipment of the machine.
- Contacts of the manoeuvre relays.
- The correct working order of the active and passive safety circuits.
- The correct working order of the LCD display messages.
- The receiver cover should be properly sealed.

To check the working order of the active safety circuit, simply press the STOP BUTTON. The general contactor should drop immediately.

To check the working order of the passive safety circuit, remove the battery from the transmitter and the general contactor should drop after 1.9 seconds.

6.3. MAINTENANCE OF THE CHARGER

Maintenance of the charger is carried out at a similar frequency to the set. The following parts should be checked:

- Contacts and battery holders (which should be clean and free of rust).
- Springs (ensure that they are sufficiently taut to guarantee contact).

ATTENTION: IF YOU DETECT ANY ANOMALY IN THE WORKING ORDER OF THE EQUIPMENT, IT SHOULD BE IMMEDIATELY SWITCHED OFF. REPAIRS SHOULD BE CARRIED OUT BY A TECHNICAL SERVICE AUTHORISED BY ITOWA.

ORIGINAL ITOWA SPARE PARTS SHOULD ALWAYS BE USED. IT IS NOT PERMITTED TO ALTER THE SPECIFICATIONS OF THE RADIO FREQUENCY SYSTEM OR THE CIRCUITS INVOLVED IN THE SAFETY SYSTEMS.

If you have any doubt or enquiry, contact our Technical Assistance Service or any of our authorised technicians.

6.4. CHARGING THE BATTERIES

The batteries supplied with ITOWA equipment do not have a memory effect, meaning that they can be charged without having to the totally flat. In order to lengthen their life span, it is recommended to use one battery in the morning and another in the afternoon. One battery can then be charged while the other is being used.

7. TROUBLESHOOTING

If an anomaly occurs in the equipment, check the following:

1) Location of the breakdown:

etermine whether the breakdown is in the remote control equipment or in the electrical circuit of the machine. To check this, simply connect the original pushbuttons to the machine (or from the cabin), and check that the crane is operating properly. If the machine is working correctly, it means that the breakdown is in the remote control, otherwise the breakdown is in the machine.**Checking the transmitter:**

Turn on the remote control by releasing the STOP BUTTON and pressing the START button. The "TX OK" led should activate. If this indicator lights up, the problem is in the receive. If this is not the case, check that the battery is charged. If the "BAT OK" led is flashing, it means that the battery is on stand-by and the equipment can still transmit signals but will stop transmitting shortly. If the "BAT OK" is on, it means that the battery is flat and must be replaced by a fully charged battery.

If the battery is charged correctly, check that the pushbuttons operate properly. If they do, the transmitter will have to be repaired by the Technical Assistance Service authorised by ITOWA.

3) Checking the receiver:

Check the power supply. The receiver display should be on; if it is not, check the power supply circuit connection.

If the power supply is correct, press the START button of the transmitter and check whether the stop and start relays are activated. If they are, check the manoeuvre fuse. If the stop and start relays are not activated, check that there is voltage. If there is, the receiver must be repaired by the Technical Assistance Service authorised by ITOWA.

Check that the antenna and connection to the receiver are in good condition.

ATTENTION: ORIGINAL SPARE PARTS SHOULD BE USED IN ALL REPAIRS. ALL SAFETY FEATURES INCLUDING THOSE OF THE TRANSMITTER AND UHF RECEIVER SHOULD NOT BE MODIFIED.

8. QUICK GUIDE

8.1. POSSIBLE INCIDENTS AND SOLUTIONS

INCIDENT	NO MANOEUVRE CAN BE PERFORMED
INDICATION	TX ON led is on.
CAUSE	The START button has not been pressed
SOLUTION	Press the START button
INDICATION	Low battery led is permanently on
CAUSE	Flat battery
SOLUTION	Replace it with a charged battery Charge the flat battery

INCIDENT	THE TRANSFER MANOEUVRE DOES NOT WORK
CAUSE	Transfer switch of the transmitter is in the OFF position
SOLUTION	Turn the switch ON

INCIDENT	THE TRANSMITTER HAS LIMITED RANGE
CAUSE	The antenna is disconnected, broken or in bad condition
SOLUTION	Replace the antenna, contact the Technical Service Assistance

INCIDENT	THE TX ON LED IS FLASHING
CAUSE	A manoeuvre master control or pushbutton is pressed
SOLUTION	Check their condition

* Not valid for GCFI versions.

APPENDIXES

A. DISPLAY MESSAGES

```
ITOWA S.A
RRC16
```

```
ITOWA S.A
RRC32
```

Initial and reception standby message, appearing after start-up or when on standby for a manoeuvre. It indicates the availability of the receiver to perform any manoeuvre in the working channel:xx.

```
     0  0  0  0  0
0  0  0
```

```
0000000000000000
```

Message appearing when the operator is working with the equipment. Symbol I indicates that a certain relay has been activated, and the symbol 0 indicates deactivation. The relays are numbered from left to right and from up to down.

```
EMERGENCY
RELAY
```

Message appearing on the display if a fault occurs in one of the two guided stop relays.

```
SERIAL DRIVERS
   FAILURE
```

Message appearing on the display if a fault occurs in any of the control drivers of the relays.

```
E2PROM FAILURE
```

Message appearing in the display if there is a fault in the E^2PROM memory of the receiver. In this case, contact the authorised technical service.

B. USEFUL ADDRESSES

ITOWA S.A.U.
C/ Faraday, 159
08224 TERRASSA (BARCELONA)
Telf +34-93.733.98.50 Fax +34-93.789.13.51
e-mail: info@itowa.com
http://www.itowa.com