About Your Audio System

The audio system features AM/FM radio. It can also play WMA/MP3/AAC files, USB flash drives, and iPod devices.

You can operate the audio system from the buttons and switches on the panel, or the remote controls* on the steering wheel.

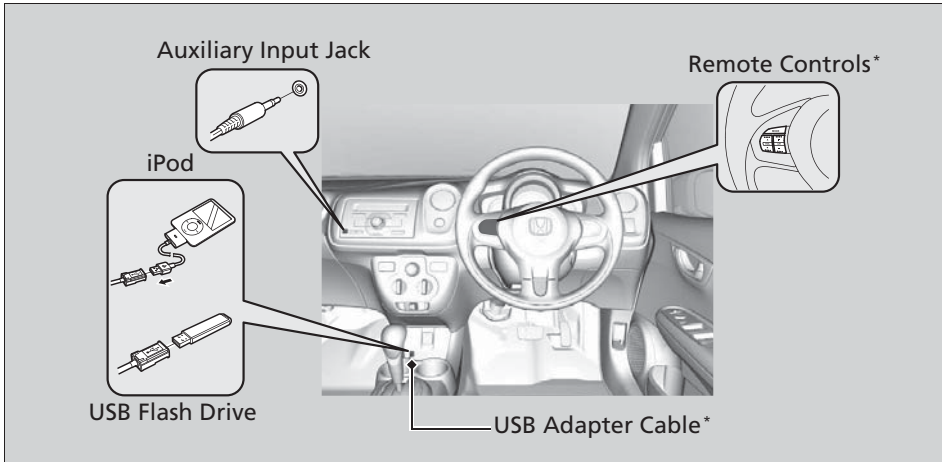

About Your Audio System

iPod is a trademark of Apple Inc.

 * Not available on all models

USB Adapter Cable*

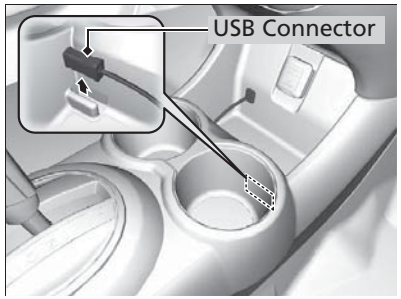

1. Unclip the USB connector and loosen the adapter cable.
2. Install the iPod dock connector or the USB flash drive to the USB connector.

USB Adapter Cable*

- Do not leave the iPod or USB flash drive in the vehicle. Direct sunlight and high temperatures may damage it.
- Do not use an extension cable with the USB adapter cable.
- Do not connect the iPod or USB flash drive using a hub.
- Do not use a device such as a card reader or hard disk drive, as the device or your files may be damaged.
- We recommend backing up your data before using the device in your vehicle.
- Displayed messages may vary depending on the device model and software version.

If the audio system does not recognize the iPod, try reconnecting it a few times or reboot the device. To reboot, follow the manufacturer's instructions provided with the iPod.

* Not available on all models

Auxiliary Input Jack*

Use the jack to connect standard audio devices.

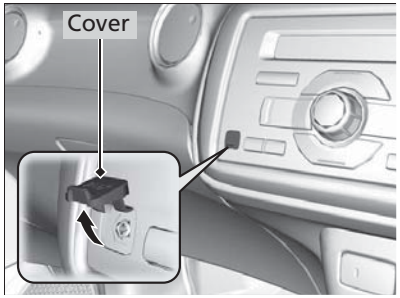

1. Open the **AUX** cover.
2. Connect a standard audio device to the input jack using a 3.5 mm stereo miniplug.
   ▶ The audio system automatically switches to the AUX mode.

Auxiliary Input Jack*

To switch the mode, press any of the audio mode buttons. You can return to the AUX mode by pressing the **USB/AUX** button.

Audio Antenna

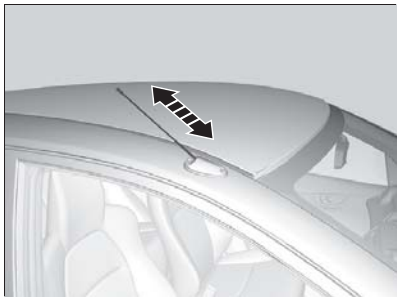

Your vehicle is equipped with a pillar antenna on the front right pillar.

Audio Antenna

NOTICE

Before using a "drive-through" car wash, stow away the antenna by pushing it by hand. This prevents the antenna from being damaged by the car wash brushes.

* Not available on all models

Audio System Basic Operation*

To use the audio system function, the ignition switch must be in ACCESSORY I or ON II.

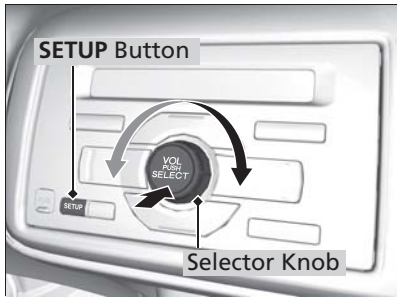

Use the selector knob and **SETUP** button to access and operate most of the audio features.

Selector knob: Press the knob first before using the selector knob. (Selector Icon) appears on the display. Rotate left or right to scroll through the available choices. Press to set your selection.

SETUP button: Press to change the display while using the audio system. Each time you press the button, you can see a menu option you can select.

Audio System Basic Operation*

These indications are used to show how to operate the selector knob.

Rotate to select.

Press to enter.

* Not available on all models

Continued

Each Time You Press the SETUP Button:

Display an available menu option for the audio system is in.

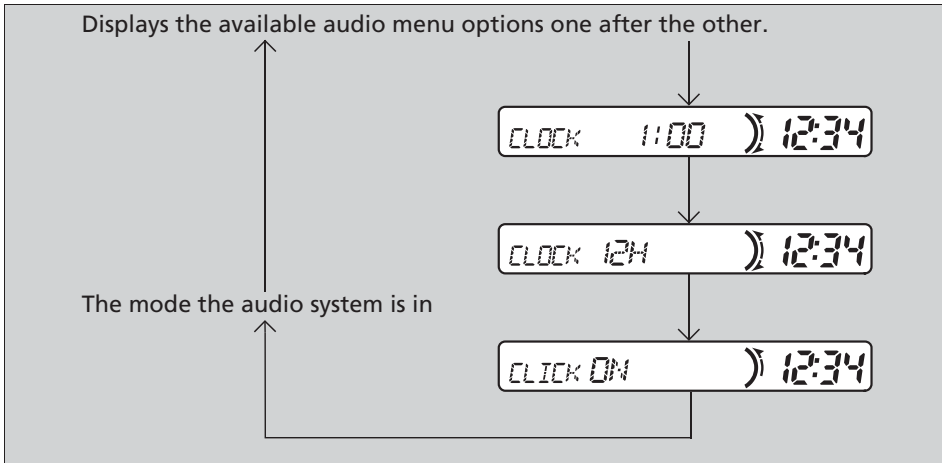

Menu options available for all the audio modes

CLOCK:

➡ **Clock*** P. 76

CLICK:

When you operate the audio system using the selector knob, you hear a clicking sound. You can mute this sound from the **CLICK** option.

Rotate to select **OFF**. Press to enter. To turn this feature on again, select **ON**.

Audio System Basic Operation*

Available menu options for each audio mode are:

AM/FM Radio

- **A-SEL**
  ➡ **Auto Select (A.SEL)** P. 122
- **SCAN START**
  ➡ **How to Start Scanning** P. 122
- **ERASE**
  ➡ **How to Delete Preset Memory** P. 122

iPod

- **DISP**
  ➡ **How to Select a Title Display** P. 125
- **PMODE**
  ➡ **How to Select a Play Mode** P. 125

USB Flash Drive

- **DISP**
  ➡ **How to Select a Title Display** P. 128
- **PMODE**
  ➡ **How to Select a Play Mode** P. 128

* Not available on all models

Audio Remote Controls*

Allows you to operate the audio system while driving.

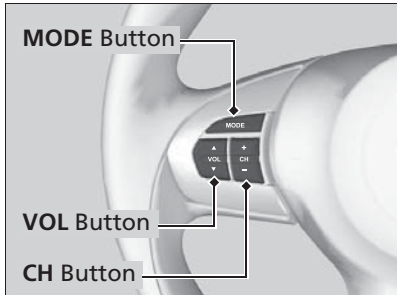

MODE Button
Cycles through the audio modes as follows:
FM→AM→AUX

VOL (Volume) Button
Press ▲: To increase the volume.
Press ▼: To decrease the volume.

CH (Channel) Button
- When listening to the radio
  Press +: To select the next preset radio station.
  Press −: To select the previous preset radio station.
  Press and hold +: To select the next strong station.
  Press and hold −: To select the previous strong station.
- When listening to an iPod, or USB flash drive
  Press +: To skip to the next song.
  Press −: To go back to the beginning of the current or previous song.
- When listening to a USB flash drive
  Press and hold +: To skip to the next folder.
  Press and hold −: To go back to the previous folder.

Audio Remote Controls*

Some mode appears only when an appropriate device or medium is used.

* Not available on all models

Adjusting the Sound

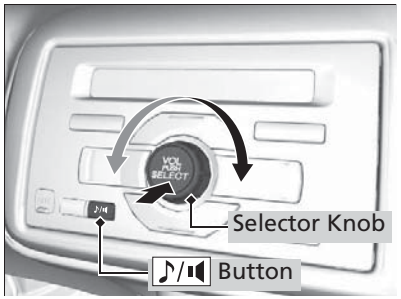

Press the ♪/◀ (Sound) button, and rotate to adjust the sound setting. Press .

Each time you press the ♪/◀ button, a sound mode switches as follows.

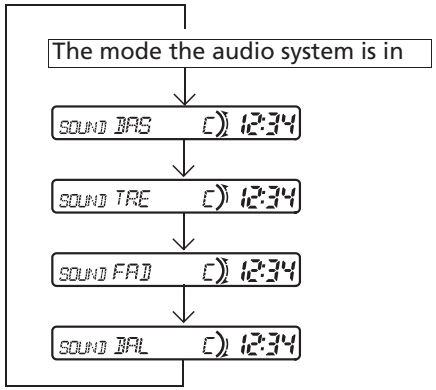

Adjusting the Sound

When the adjustment level reaches the centre, you will see **C** in the display.

Playing the AM/FM Radio

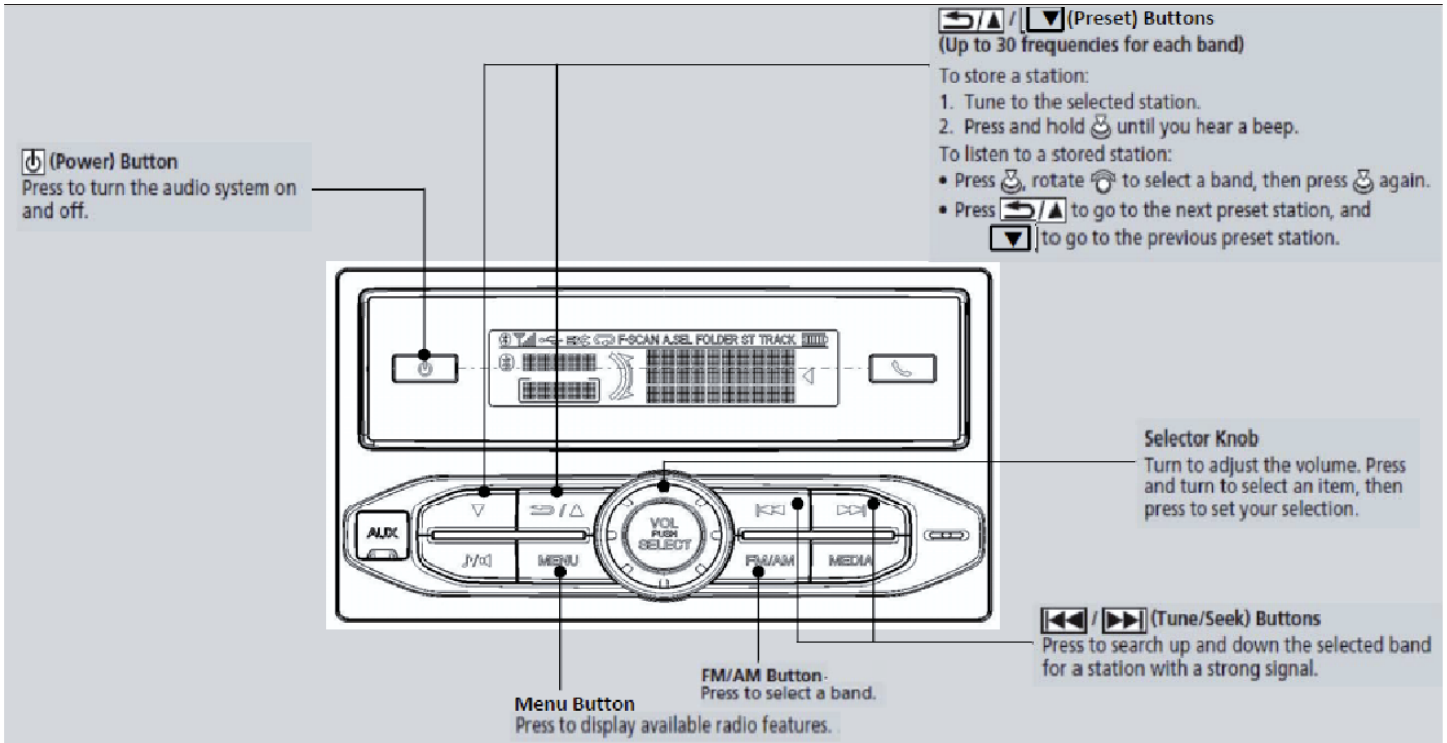

Features

Auto Select (A.SEL)

Use the auto select feature to scan both bands and store the strongest station in each preset.

1. Press the **SETUP** button until **A.SEL** displays.
2. Rotate to select to **ON**. Press .
▶ The system goes into scan mode for several seconds.

To turn off auto select, select **OFF** at step 2. This stores the presets you originally set.

How to Start Scanning

Use the scan feature to sample each of the strongest stations on the selected band for 10 seconds.

1. Press the **SETUP** button until **SCAN START** displays.
2. To start scanning, press .
3. When you find the station you want to continue listening, press again.
▶ The scan feature is turned off.

How to Delete Preset Memory

You can delete the stations at once or one station at a time in the preset memory.

1. Press the **SETUP** button until **ERASE** displays.
2. Rotate to select **ALL** or the preset station you want to delete.
3. Press .
▶ To delete all the stations at once, select **OK?**, then press again.

Playing the AM/FM Radio

The **ST** indicator appears on the display indicating stereo FM broadcasts.
Stereo reproduction in AM is not available.

You can store 30 AM stations and 30 FM stations into the preset button memory.
Auto Select function scans and stores up to 6 AM stations and 12 FM stations with a strong signal into the preset button memory.

If you do not like the stations auto select has stored, you can manually store your preferred frequencies.

The stations you store in the preset memory are automatically listed in a sequential order. The station you stored last always goes to the end of the list. This order cannot be changed.

If you add a station when there are always 30 stations stored in the memory, the station, which has been in the list for the longest time, is overwritten by the newly added station.

Playing an iPod

Connect the iPod using your dock connector to the USB adapter cable, then press the **USB/AUX** button.

➡ **USB Adapter Cable*** P. 115

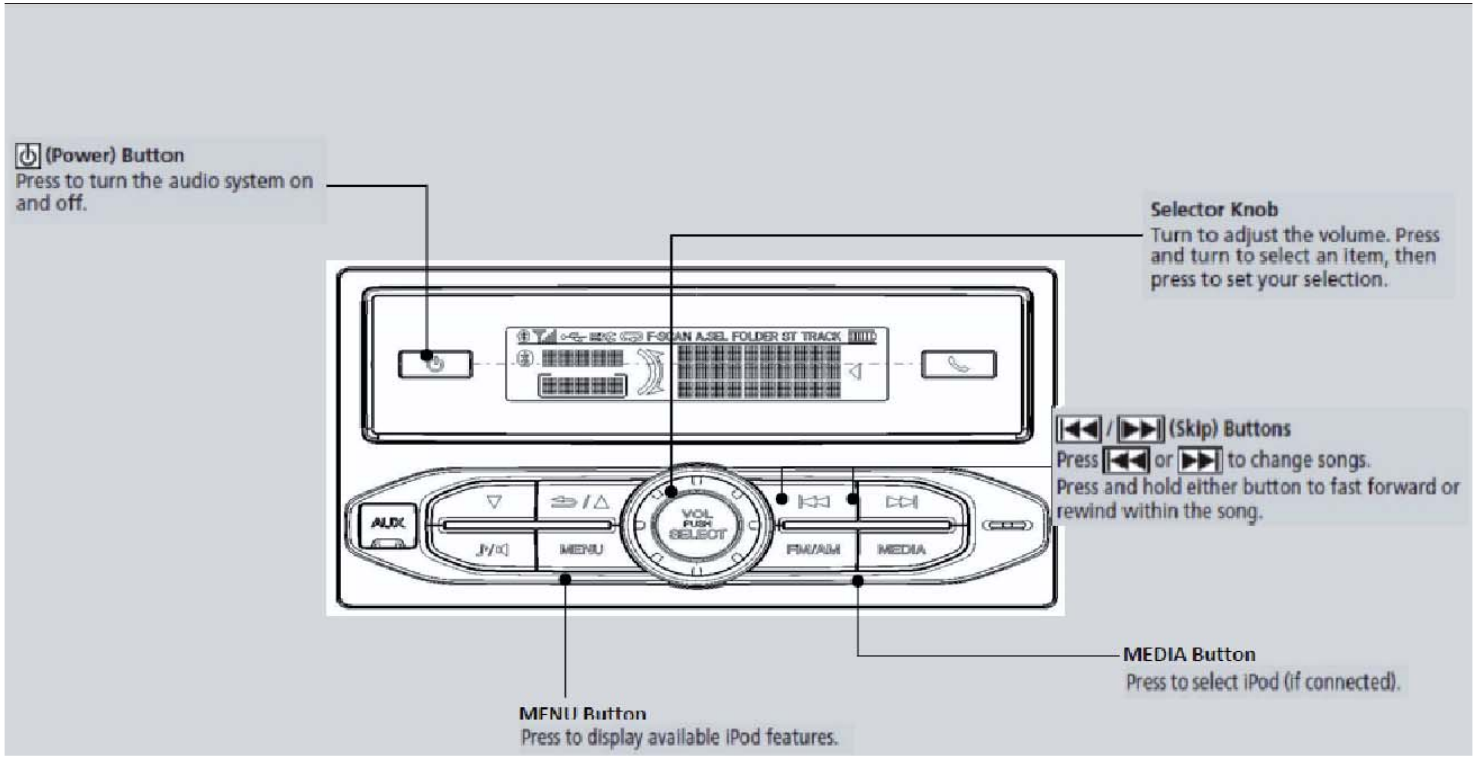

How to Select a File from the iPod Menu

■If you want to select a song from **PLAYLIST**

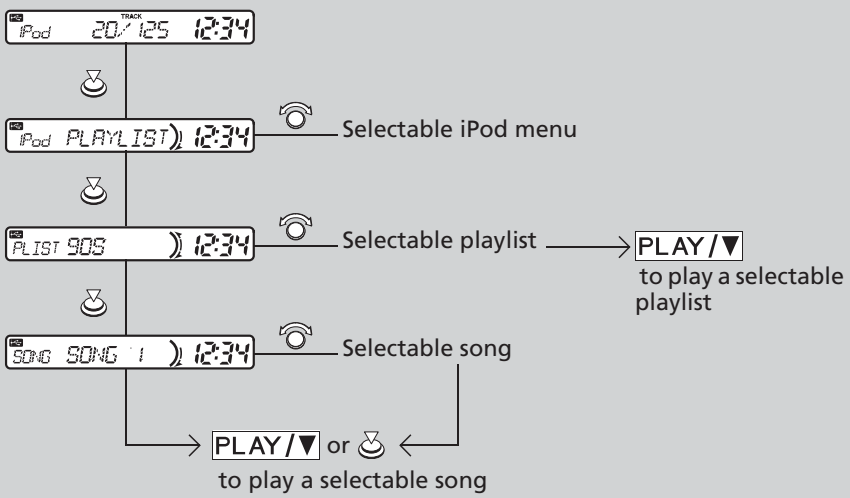

1. Press to display the iPod menu.
2. Rotate to select a menu.
3. Press to display the items on that menu.
4. Rotate to select an item. If you want to start play songs within that category, press the PLAY/▼ button. To select a specific song, press to display songs listed within that category.
5. Rotate to select a song. Press or the PLAY/▼ button.

How to Select a File from the iPod Menu

iPod Menu Items
Playlist
Artists
Albums
Songs
Shuffle

Features

How to Select a Title Display

If the iPod data you are playing is recorded with text data, it can be displayed.

1. Press the **SETUP** button until **DISP** displays.
2. Rotate to select the text data information you want to see. Press .

How to Select a Play Mode

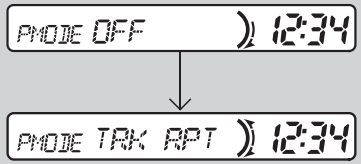

You can select repeat and random when playing a track.

1. Press the **SETUP** button until **PMODE** displays.
2. Rotate to select a mode, then press .

To turn off a play mode

1. Press the **SETUP** button until **PMODE** displays.
2. Rotate to select **OFF**, then press .

How to Select a Title Display

Title Display Mode Menu Items

NUMBER: Count number of available songs
ARTIST: Artist name
ALBUM: Album name
SONG: Song name

The display shows up to eight characters of text data.

How to Select a Play Mode

Play Mode Menu Items

TRK RPT: Repeat the current tracks.
TRK RDM: Plays tracks in random order. In which tracks this feature randomly play depends on the iPod menu you have selected.
ALB RDM: Plays all tracks in the current album in random order.

Playing a USB Flash Drive

Your audio system reads and plays sound files on a USB flash drive in either MP3, WMA or AAC format.
When suing the USB flash drive, connect it to the USB adapter cable, then press the **USB/AUX** button.

➡ **USB Adapter Cable*** P. 115

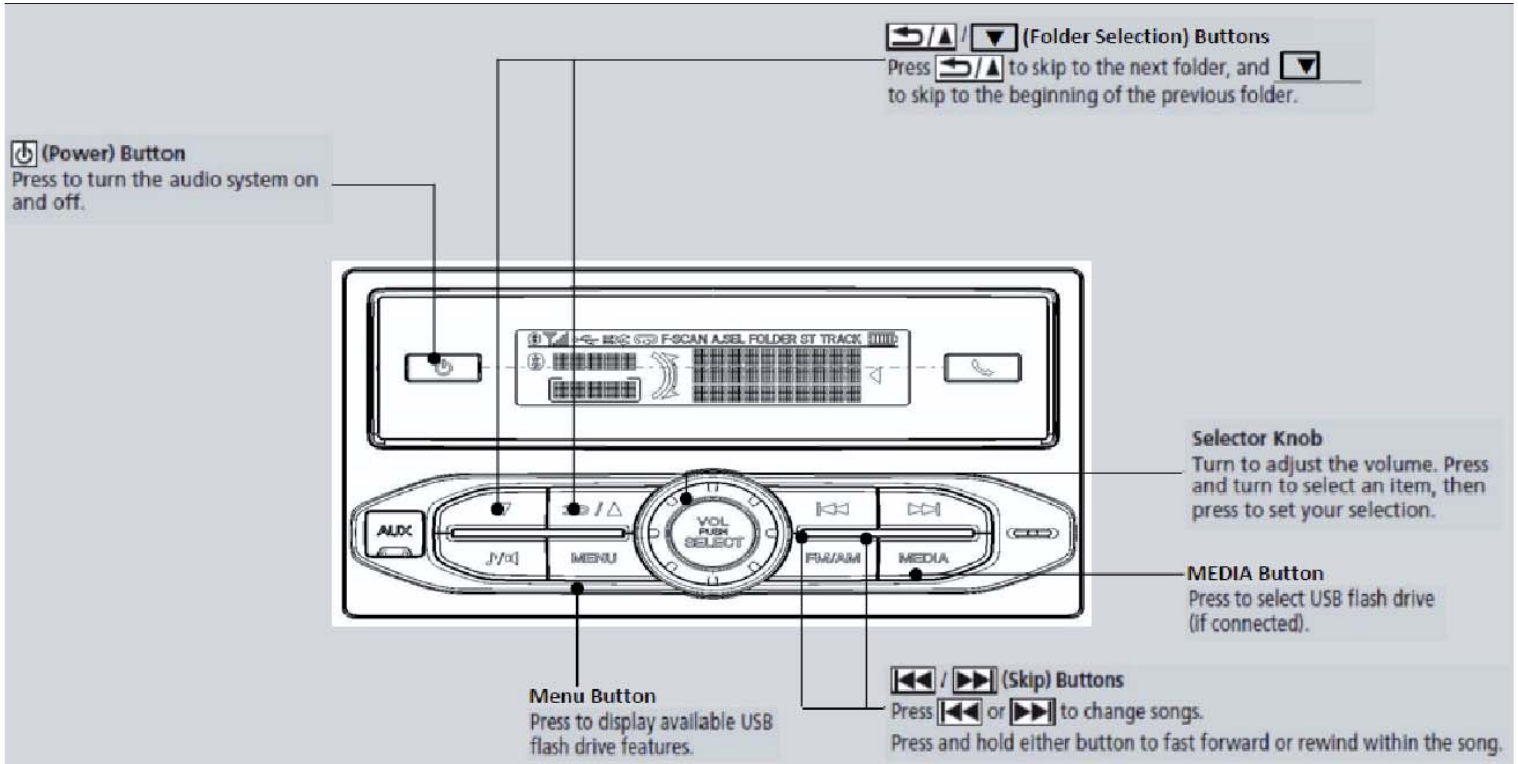

* Not available on all models

How to Select a File from a Folder with the Selector Knob (MP3/WMA/AAC)

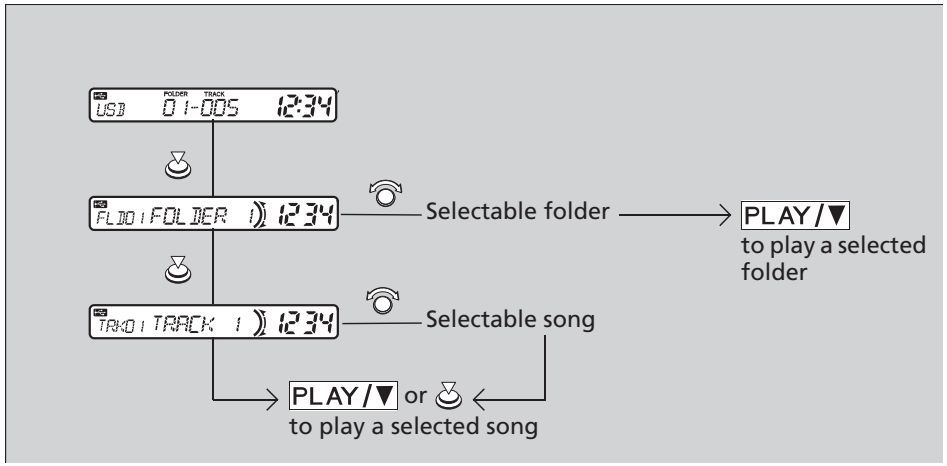

1. Press to display a folder list.
2. Rotate to select a folder.
3. Press to change the display to a list of files in that folder. If you want to start playing songs within that folder, press the PLAY/▼ button. To select a specific song, press to display the song, then rotate to select a song.
4. Press or the PLAY/▼ button.

Continued

How to Select a Title Display

Title Display Mode

DISP NUMBER 12:34

If the USB data you are playing is recorded with text data, it can be displayed.

1. Press the **SETUP** button until **DISP** displays.
2. Rotate to select the text data information you want to see. Press .

How to Select a Play Mode

PMODE OFF 12:34

↓

PMODE TRK RPT 12:34

You can select repeat and random when playing a track/file.

1. Press the **SETUP** button until **PMODE** displays.
2. Rotate to select a mode, then press .

To turn off a play mode

1. Press the **SETUP** button until **PMODE** displays.
2. Rotate to select **OFF**, then press .

How to Select a Title Display

Title Display Mode Menu Items

NUMBER: Track number
FILE: File name
FOLDER: Folder name
ARTIST: Artist name
ALBUM: Album name
TRACK: Song name

The display shows up to eight characters of text data.

How to Select a Play Mode

Play Mode Menu Items

TRK RPT: Repeats the current file
FLD RPT: Repeats all files in the current folder.
FLD RDM: Plays all files in the current folder in random order.
TRK RDM: Plays all files in random order.
TRK SCAN: Samples all files in the current folder.
FLD SCAN: Samples the first file of each folder.

iPod/USB Flash Drive

If an error occurs while playing an iPod or USB flash drive, you may see the following error messages. If you cannot clear the error message, contact a dealer.

Error Message	Solution
ERROR	Appears when there is a problem with the USB adapter unit. Check if the device is compatible with the USB adapter unit.
CHECK MANUAL	Appears when an incompatible device is connected. Disconnect the device. Then turn the audio system off, and turn it on again. Do not reconnect the device that caused the error.
NO SONG	Appears when the iPod or USB flash drive is empty. Check that compatible files are stored on the device.
CONNECT RETRY	Appears when the system does not acknowledge the iPod or USB flash drive. Reconnect the iPod or USB flash drive.
FORMAT **OLD VER**	Appears when the files in the USB flash drive are DRM or an unsupported format. This error message appears for about three seconds, then plays the next song. Appears when an unsupported iPod is connected. If it appears when a supported iPod is connected, update the iPod software to the newer version.
DEVICE	Appears when an unsupported device is connected. If it appears when a supported device is connected, reconnect the device.

Compatible iPod and USB Flash Drive

iPod Model Compatibility

Model
iPod (5th generation)
iPod classic 80/160 GB
iPod classic 120 GB
iPod classic 160 GB (launch in 2009)
iPod nano
iPod touch

USB Flash Drives

- Use a recommended USB flash drive of 256 MB or higher.
- Some digital audio players may not be compatible.
- Some USB flash drives (e.g., a device with security lockout) may not work.
- Some software files may not allow for audio play or text data display.
- Some versions of MP3, WMA, or AAC formats may be unsupported.

iPod Model Compatibility

This system may not work with all software versions of these devices.

USB Flash Drives

Files on the USB flash drive are played in their stored order. This order may be different from the order displayed on your PC or device.

This device complies with part 15 of FCC Rules and Industry Canada's licence-exempt RSSs. Operation is subject to the following two conditions: (1) this device may not cause harmful interference, and (2) this device must accept any interference received, including interference that may cause undesired operation.
Le présent appareil est conforme à la partie 15 des règles de la FCC et aux normes des CNR d'Industrie Canada applicables aux appareils radio exempts de licence. L'exploitation est autorisée aux deux conditions suivantes : (1) l'appareil ne doit pas produire de brouillage, et (2) l'appareil doit accepter tout brouillage subi, même si le brouillage est susceptible d'en compromettre le fonctionnement.

Changes or modifications not expressly approved by the party responsible for compliance could void the user's authority to operate the equipment.
This transmitter must not be co-located or operated in conjunction with any other antenna or transmitter.
This equipment complies with FCC/IC radiation exposure limits set forth for an uncontrolled environment and meets the FCC radio frequency (RF) Exposure Guidelines and RSS-102 of the IC radio frequency (RF) Exposure rules. This equipment should be installed and operated keeping the radiator at least 20cm or more away from person's body.
(仏) Cet équipement est conforme aux limites d'exposition aux rayonnements énoncées pour un environnement non contrôlé et respecte les règles les radioélectriques (RF) de la FCC lignes directrices d'exposition et d'exposition aux fréquences radioélectriques (RF) CNR-102 de l'IC. Cet équipement doit être installé et utilisé en gardant une distance de 20 cm ou plus entre le radiateur et le corps humain.