ROAMMKMOD1 User's Manual

REVISION HISTORY

Date	Version	Description	Author
2/20/2014	1.0	Initial Draft	Ryan Wagner
3/5/2014	1.1	Command set revisions	Ryan Wagner
3/18/2014	1.2	Added Theory of Operation section	Ryan Wagner
4/16/2014	1.4	Added close-up photo of RP-SMA connector and changed lower case k to upper case throughout	Ryan Wagner

Background

The ROAMMK3MOD1 radio module is intended for installation in wireless streetlight controls applications. The module is supplied regulated 3.3Vdc by a ROAM/SSG custom host board with +/-1% regulated supply in all applications. The module contains filtering capacitors onboard to smooth variations in supply voltage.

The module assembly is also known as ROAM part numbers; 701-00041-001 (2dBi PIFA permanently connected antenna) and 701-00041-002 (RP-SMA connected 5dBi whip antenna). Each variant is physically and electrically identical except for the antenna implementation.

Modem User's Manual (not accessible to end-users).

1. Overview of the Radio Modem Hardware

The ROAMMK3MOD1 modem is an 802.15.4 wireless module that allows wireless communication using a standard asynchronous serial data stream. The main features of the ROAMMK3MOD1 radio modem are presented in the figures below. FCC ID label will be applied to the shield at a later date.

701-00041-002 Variant

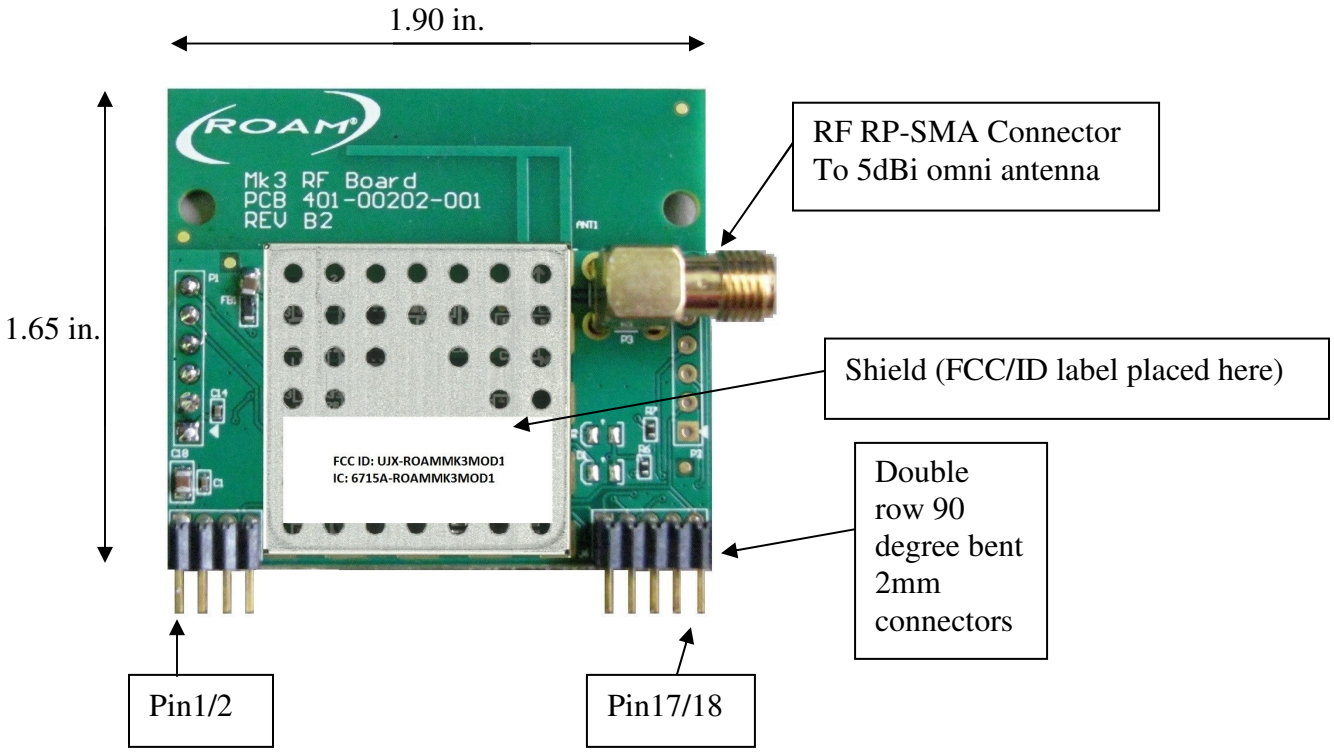

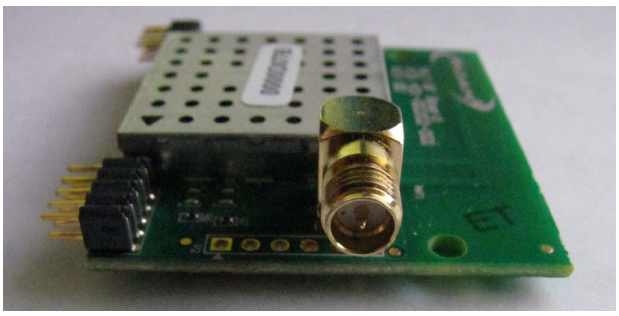

Close-up end view of RP-SMA connector.

701-00041-001 Variant

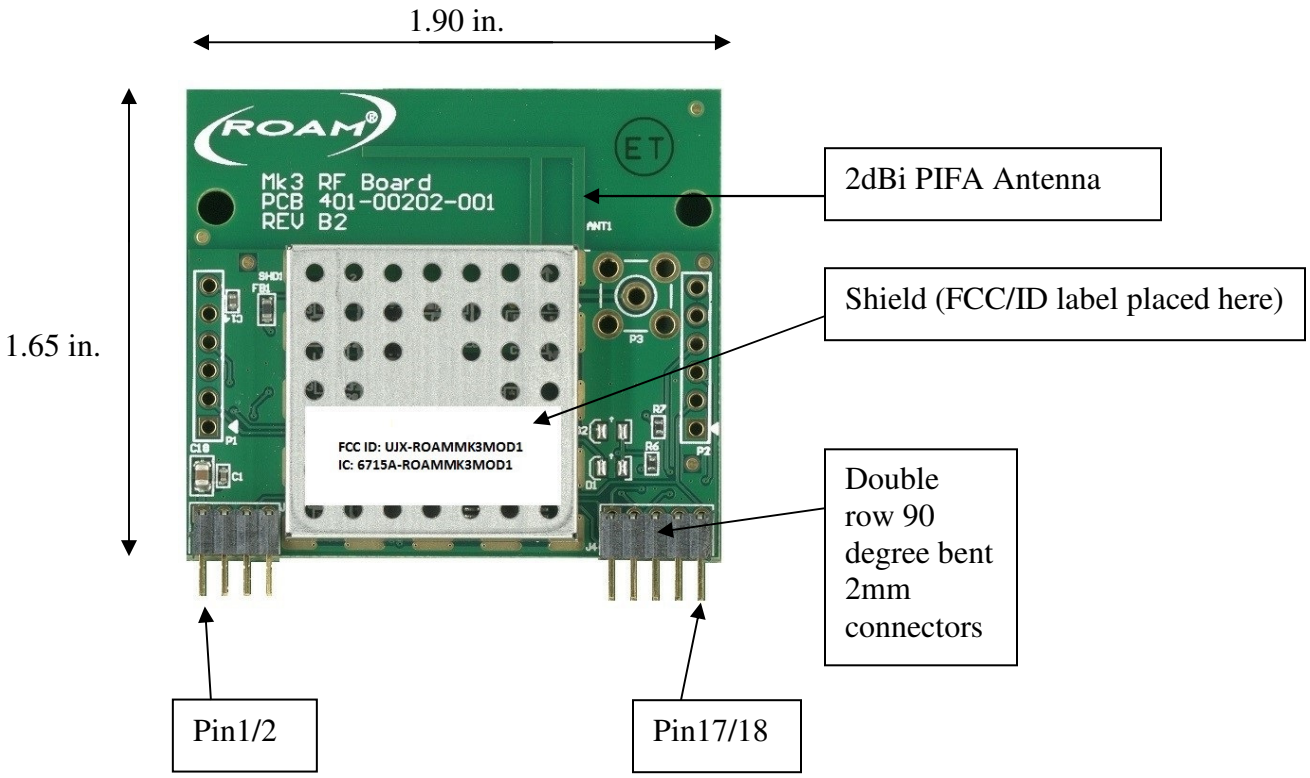

Theory of Operation

A functional block diagram of the Acuity RF module is shown on the following page. This module is a direct sequence spread spectrum transceiver operating in the 2400MHz to 2483.5MHz ISM band. The system is based on the IEEE 802.15.4 standard, with channels spaced at 5MHz intervals in the ISM band. The system operates at a chip rate of 2Mcps, a symbol rate of 62.5kpbs, and a bit rate of 250kbps. O-QPSK modulation is used with 16-ary orthogonal symbols. The module transmits with a maximum power of +16dBm into either the integral or an external antenna. The module does not transmit for more that 10ms over any 125ms time period.

The module is a low-IF receiver, amplifying the signal with a low noise amplifier and then down-converting to a 1st IF of 65MHz and then into I and Q (quadrature) to a 1MHz IF. Differential chip detection is then performed digitally and the correlator de-spreads the DSS O-QPSK signal, extracting symbols and packets.

Functional Block Diagram of the ROAMMK3MOD1 Module

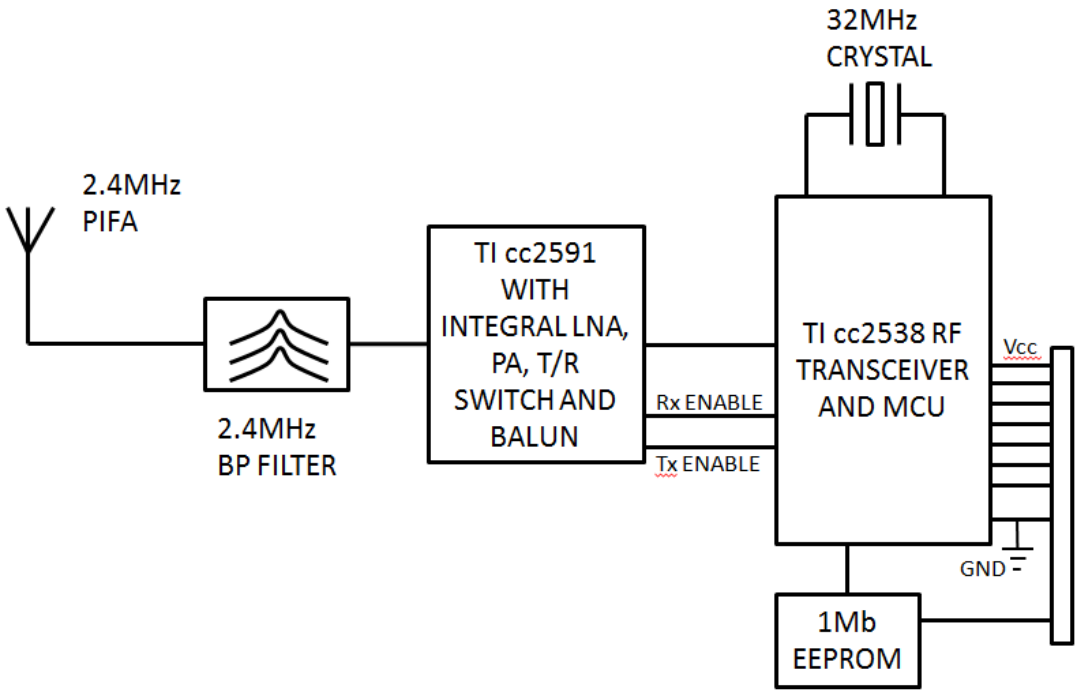

The ROAMMK3MOD1 radio module consists of three functional entities:

1. Transceiver section – processor, RF transceiver
2. RF section – BALUNs, RF PA, RF filters, RF switch
3. Non-volatile storage – EEPROM

A table of the radio modem pins is provided below, describing the purpose and functionality of the pins and the max voltage range on the pins. The pin-out is identical for each of the above two module variants.

Pin-Out Chart for the ROAMMK3MOD1 Module

Pin number	Pin name	Function of pin	Nominal voltage	Max voltage
1	VCC	Voltage supply	3.3 V	3.6 V
2	GND	Ground pin	0 V	0 V
3	RST	RESET, active low	3.3V	3.6V
4	BKGD	DEBUG line	3.3 V	3.6 V
5	KBD5	PTA5, GPIO1, Interrupt capable	3.3 V	3.6 V
6	VREFH	Voltage reference pin	2.5V	3.3 V
7	KBD7	PTA7, GPIO3, Interrupt capable	3.3 V	3.6 V
8	KBD6	PTA6, GPIO2, Interrupt capable	3.3 V	3.6 V
9	SCL	SCL line of I2C bus	3.3 V	3.6 V
10	SDA	SDA line of I2C bus	3.3 V	3.6 V
11	TXD2	TX line of UART 2	3.3 V	3.6 V
12	RXD2	RX line of UART 2	3.3 V	3.6 V
13	TXD1	TX line of UART 1	3.3 V	3.6 V
14	RXD1	RX line of UART 1	3.3 V	3.6 V
15	ADC2	PTB2, ADC input	3.3 V	3.6 V
16	ADC3	PTB3, ADC input	3.3 V	3.6 V
17	ADC1	PTB1, ADC input	3.3 V	3.6 V
18	ADC0	PTB0, ADC input	3.3 V	3.6 V

2. Operation of the ROAMMK3MOD1 Radio Modem

Communication with the ROAMMK3MOD1 radio modem happens through serial port 1 or 2. The baud rate is set to be 38400, 8N1.

2.1. Command Set

Open an instance of terminal software on a serial port with the above settings and connect to the RF modem. Any command is single line followed by enter command. Format of command is: command param1 param2 … <enter> At startup using serial port 1, the help command will be automatically executed and echoed to the terminal screen, which will be followed by a command prompt. When using serial port 2, the help command is not automatically echoed and pushing the enter key a few times may be necessary until the reception of the command prompt.

Serial Commands description:

1. help
a. **Description**: display commands list and a short description of each command
b. **Command name**: "help"
c. **Parameters: None**
d. **Ex:** help<enter>

2. startfreqcal
a. **Description**: commands MCU to output scaled clock on GPIO pin for calibration
b. **Command name**: "**startfreqcal**"
c. **Parameters: None**
d. **Ex:** startfreqcal<enter>

3. getosctrim
a. **Description**: commands MCU to return crystal trim register contents RFCORE_XREG_FREQTUNE (max of 0x0F)
b. **Command name**: "**getosctrim**"
c. **Parameters: None**
d. **Ex:** getosctrim<enter>

4. setosctrim
a. **Description**: commands MCU to write parameter to crystal trim register RFCORE_XREG_FREQTUNE (max of 0x0F)
b. **Command name**: "**setosctrim**"
c. **Parameters:** Value: **1 digit hex format** (between 0 and F)
d. **Ex:** setosctrim F<enter>

5. getadc
a. **Description**: command MCU to read all ADC channels and report their raw values in response
b. **Command name**: "**getadc**"
c. **Parameters: None**
d. **Ex: getadc**<enter>

6. outhi
a. **Description**: command MCU to set designated GPIO pin high
b. **Command name**: "**outhi**"
c. **Parameters: 2 char ASCII string: PORT(A…D)+PIN(0…7) (example A5)**
d. **Ex: outhi A5**<enter>

7. outlo
a. **Description**: command MCU to set designated GPIO pin low
b. **Command name**: "**outhi**"
c. **Parameters: 2 char ASCII string: PORT(A…D)+PIN(0…7) (example A5)**
d. **Ex: outlo A5**<enter>

8. e2_setsn
a. **Description**: command MCU to store the MAC ID parameter in EEPROM
b. **Command name**: "**e2_setsn**"
c. **Parameters: 8 digit hex format** (between 00000000 and FFFFFFFF)
d. **Ex: e2_setsn 1A2B3C4D**<enter>

9. txnomod
a. **Description**: put modem constant transmit state, continuous wave, for calibration only
b. **Command name**: "**txnomod**"
c. **Parameters: None**
d. **Ex: txnomod**<enter>

12. rx
a. **Description**: put modem in constant receive state
b. **Command name**: "**rx**"
c. **Parameters: None**
d. **Ex: rx**<enter>

13. setch
a. **Description**: change modem channel to selected parameter
b. **Command name**: "**setch**"
c. **Parameters: 2 digit decimal channel number (00…15)**
d. **Ex: setch 0**<enter>

14. setpa
a. **Description**: command MCU to write payload hex value into PA power RFCORE_XREG_TXPOWER register
b. **Command name**: "**setpa**"
c. **Parameters: 2 digit hex format (between 00 and FF)**
d. **Ex: setpa F5**<enter>

15. reset
a. **Description**: commands MCU to reset via watchdog timeout
b. **Command name**: "**reset**"
c. **Parameters: None**
d. **Ex: reset**<enter>

16. e2_erase
a. **Description**: commands MCU to bulk erase EEPROM
b. **Command name**: "**e2_erase**"
c. **Parameters: None**
d. **Ex: e2_erase**<enter>

17. e2_setpa
a. **Description**: commands MCU to write payload hex value to PA power structure element in EEPROM
b. **Command name**: "**e2_setpa**"
c. **Parameters: 2 digit hex format (between 00 and FF)**
d. **Ex: e2_setpa F5**<enter>

18. e2_setosctrim
a. **Description**: commands MCU to write payload hex value to oscillator trim structure element in EEPROM
b. **Command name**: "**e2_setosctrim**"
c. **Parameters: 1 digit hex format (between 0 and F)**
d. **Ex: e2_setosctrim B**<enter>

19. e2_read2
a. **Description**: commands MCU to read modem settings structure from EEPROM
b. **Command name**: "**e2_read2**"
c. **Parameters: None**
d. **Ex: e2_read2**<enter>

ROAMMK3MOD1 Frequency Selection

The ROAMMK3MOD1 module is not frequency agile during run-time, but it can select an unoccupied portion of the spectrum at startup. The series uses a set of 16 channels as defined by the IEEE 802.15.4 standards which span a range from 2405 to 2480 MHz with 5 MHz spacing between channels:

Center Frequency (MHz)	Channel Designator	Nominal Occupied BW
2405	0	2402.5-2407.5
2410	1	2407.5-2412.5
2415	2	2412.5-2417.5
2420	3	2417.5-2422.5
2425	4	2422.5-2427.5

2430	5	2427.5-2432.5
2435	6	2432.5-2437.5
2440	7	2437.5-2442.5
2445	8	2442.5-2447.5
2450	9	2447.5-2452.5
2455	10	2452.5-2457.5
2460	11	2457.5-2462.5
2465	12	2462.5-2467.5
2470	13	2467.5-2472.5
2475	14	2472.5-2477.5
2480	15	2477.5-2482.5

The channel mask is the name used to describe the list of frequency channels that a radio can use. The default channel mask for client radios allows them to operate on any frequency highlighted blue in the table above.

3. RF Exposure Limit Warning

To comply with FCC's RF exposure limits for general population / uncontrolled exposure, the antenna(s) used for this transmitter must be installed to provide a separation distance of at least 20cm from all persons and must not be co-located or operating in conjunction with any other antenna or transmitter.

The above statement must be placed in the end-user's operating manual of finished products.

4. FCC Certification Requirements

This Device complies with Part 15 of the FCC Rules. Operation is subject to the following two conditions:

1. This device may not cause harmful interference, and
2. This device must accept any interference received, including interference that may cause undesired operation.

The above statement must be placed in the end-user's operating manual of finished products.

5. Warning (Part 15.21)

Changes or modifications not expressly approved by the party responsible for compliance could void the user's authority to operate the equipment.

The above statement must be placed in the end-user's operating manual of finished products.

6. Compliance Statement (Industry Canada)

IC – CanadaThis device complies with Industry Canada licence-exempt RSS standard(s). Operation is subject to the following two conditions:
(1) this device may not cause interference, and (2) this device must accept any interference, including interference that may cause undesired operation of the device.
Le présent appareil est conforme aux CNR d'Industrie Canada applicablesaux appareils radio exempts de licence.L'exploitation est autorisée aux deux conditions suivantes :
(1) l'appareil nedoit pas produire de brouillage, et (2)l'utilisateur de l'appareil doit accepter tout brouillage radio électrique subi, même si le brouillage est susceptible d'encompromettre le fonctionnement.

The above statement must be placed in the end-user's operating manual of finished products.

7. Example Applications

Pictures of Typical Applications for the ROAMMK3MOD1 Module

ROAM REG127 gateway contains ROAMMK3MOD1 radio module 701-00041-002 variant with 5dBi external antenna connected via SMA connector/RG-174 cable/N-connector

8. Installation

- **This module is limited to OEM installation only**
- **OEM Integrators may not provide instructions for end user to remove/install module.**
- **This module is to be installed only in mobile or fixed applications -- reference part 2.1091(b) for a definition of mobile and fixed devices.**
- **Separate approval is required for all other operating configurations, including portable configurations with respect to 2.1093 and different antenna configurations.**

9. RF Exposure Limit Warning

To comply with FCC's RF exposure limits for general population / uncontrolled exposure, the antenna(s) used for this transmitter must be installed to provide a separation distance of at least 20cm from all persons and must not be co-located or operating in conjunction with any other antenna or transmitter (must not transmit simultaneously with any other antenna or transmitter, except in accordance with FCC multi transmitter product procedures).
The above statement must be placed in the end-user's operating manual of finished products.

10. Host Manufacturer Statements

To ensure compliance with all non-transmitter functions the host manufacturer (ROAM/Acuity Brands Technical Services) is responsible for ensuring compliance with the module(s) installed and fully operational. For example, if a host was previously authorized as an unintentional radiator under the Declaration of Conformity procedure without a transmitter certified module and a module is added, the host manufacturer is responsible for ensuring that the after the module is installed and operational the host continues to be compliant with the Part 15B unintentional radiator requirements. Since this may depend on the details of how the module is integrated with the host, the grantee (the party responsible for the module grant) shall provide guidance to the host manufacturer for compliance with the Part 15B requirements.

11. Import Statement

The FCC regulates marketing, sale and importation of radio frequency devices. When importing a radio frequency (RF) device the importer or ultimate consignee, or their designated broker, may be required to declare that the radio

frequency device meets the FCC importation conditions under Title 47 of the Code of Federal Regulation (CFR) Section 2.1204. ROAM/Acuity Brands Technical Services marks the master carton of all devices containing ROAMMK3MOD1 radios with the FCC ID and IC ID.

12. Module Labeling

A certified modular has the option to use a permanently affixed label, or an electronic label (see 9. Electronic Labelling below). For a permanently affixed label, the module must be labelled with an FCC ID - Section 2.926 (see 2.2 Certification (labelling requirements) above). See section 1 above for figures instructing installation of permanently affixed label.

13. Host Device Labeling

For a host using a certified modular with a standard fixed label, if (1) the module's FCC ID is not visible when installed in the host, or (2) if the host is marketed so that end users do not have straightforward commonly used methods for access to remove the module so that the FCC ID of the module is visible; then an additional permanent label referring to the enclosed module: "Contains Transmitter Module FCC ID: UJX-ROAMMK3MOD1" or "Contains FCC ID: UJX-ROAMMK3MOD1" must be used. The host OEM user manual must also contain clear instructions on how end users can find and/or access the module and the FCC ID. See section 1 above for figures depicting the FCC ID and IC ID that must be affixed to the exterior of the host device into which the ROAMMK3MOD1 module will be installed.