CAR-DOCTOR

Operating Manual

Wireless CARNICS
JASTEC CO.,LTD.

TABLE OF CONTENTS

IMPORTANT NOTICE.....

I. OUTLINE .....

1. COMPONENTS.....

1.1 Components Table.....

1.2 Connection System .....

2. FEATURES & FUNCIONS.....

2.1 Features .....

2.2 Functions .....

3. SPECIFICATION.....

3.1 Main Body.....

3.2 Wireless Diagnostic Module.....

3.3 Environmental Features.....

4. MAIN BODY.....

4.1 External Shape.....

4.2 Key Pad Components.....

4.3 Key Function.....

4.4 Status LED Display.....

5. WIRELESS DIAGNOSTIC MODULE.....

5.1 External Shape & Connection.....

5.2 Status LED Display.....

5.3 Vehicle Connection.....

5.4 Cigar Lighter Power Supply .....

6. COMPUTER CONNECTION .....

7. AC/DC POWER ADAPTOR.....

8. RECHARGEABLE BATTERY .....

8.1 Insertion and Removal.....

8.2 Charging.....

8.3 Li-ion Rechargeable Battery .....

9. PROGRAM CARD.....

9.1 Installation and Removal .....
9.2 Program Card.....

II. HOW TO USE.....
1. POWER ON/OFF.....
2. MENU.....
2.1 MAIN MENU .....
2.2 SYSTEM MENU.....
2.3 PRINT.....
2.4 DOWNLOAD.....
2.5 QUICK START.....
2.6 POWER.....
2.7 Tool Info.....
3. MAIN MENU(DIAGNOSIS).....
3.1 Car Selection.....
3.2 Self-Diagnosis.....
3.3 Service Data .....
3.4 How to use the Actuator Mode.....
3.5 ECU ID Check .....
4. SYSTEM MENU.....
4.1 LCD Brightness Control & Save Mode Time Setting.....
4.2 Clock Setting.....
4.3 Buzzer Setting.....
4.4 LCD TEST.....
4.5 Memory Information.....
4.6 KEY Test .....
4.7 Battery Voltage Information.....
4.8 RF-TEST .....
4.9 Update .....
4.10 Tool Info. .....

III. APPENDIX.....

FOREWORD

Today, we are entering a new paradigm with the advent of the ubiquitous society, which is rapidly changing our lifestyle with intelligent, networked, and wireless systems. Cars have also been developed into “intelligent” vehicles that feature better stability and driving efficiency by applying top-notch electric and electronic control system, no longer requiring physical control. In keeping pace with such trends, we developed the much upgraded and high-performing next-generation diagnostic system, the wireless Car-Doctor. The Car-Doctor uses a wireless communication system that enables easy and convenient diagnosis and repair of vehicle defects.

Please carefully read this manual before using the Car-Doctor to ensure getting the utmost efficiency with the diagnostic system and to shorten the maintenance hours. In addition, for your convenience, we recommend using this manual along with the maintenance guide.

JASTEC Co., Ltd.

Car-Doctor Development Team

IMPORTANT NOTICE

Please read and follow the following warnings and precautions for the safe and effective use of the Car-Doctor. Any defect or damage caused by misuse of the product cannot be covered by the warranty for free A/S.

WARNING!

1. Use the battery carefully; it may explode or cause fire.

- **Do not subject it to excessive shock or puncture it.**
- **Do not put it in high-temperature areas or subject it to heat.**
- **Do not let it get wet and be sunk under water.**
- **Keep the battery charging terminal away from metals.**

2. Do not subject to strong electrical currents.

Voltage beyond the specified level can damage the Car-Doctor.

3. Use only the AC/DC power adaptor provided with the product.

4. Do not disassemble or assemble the Car-Doctor.

If warranty indication is damaged, free A/S will not be available.

CAUTION!

Please be careful in using the Car-Doctor. It consists of high-precision parts including semiconductors.

1. Do not use the Car-Doctor in places with drastically shifting levels of moisture and temperature or where dust and liquid oil exist.

2. Avoid placing it under the direct rays of the sun, and do not leave it in the car for long.

3. Preheat it for about 30 minutes when using in a cold area.

The properties of electronic parts including the LCD may change in temperatures below 0℃.

4. Charge the battery before using the Car-Doctor.

5. Use the bag after arranging the cable to ensure the cover is well fitted.

6. Avoid subjecting the device to excessive shock when opening and closing the bag (shock may damage the device).

FCC NOTICE: This device complies with part 15 of the FCC rules. Operation is subject to the following two conditions: (1) This devices may not cause harmful interference, and (2) This device must accept any interference received, including interference that may cause undesired operation.

This equipment has been tested and found to comply with the limits for a Class B digital device, pursuant to part15 of the FCC Rules. These limits are designed to provide reasonable protection against harmful interference in a residential installation. This equipment generate, uses and can radiate radio frequency energy and, if not installed and used in accordance with the instructions, may cause harmful interference to radio communications. However, there is no guarantee that interference will not occur in a particular installation. If this equipment does cause harmful interference to radio or television reception, which can be determined by turning the equipment off and on, the user is encouraged to try to correct the interference by one or more of the following measures:

• Reorient or relocate the receiving antenna.
• Increase the separation between the equipment and receiver.
• Connect the equipment into an outlet on a circuit different from that to which the receiver is connected.
• Consult the dealer or an experienced radio/TV technician for help.

Caution: Any changes or modifications to the equipment not expressly approved by the party responsible for compliance could void user's authority to operate the equipment.

FCC Radiation Exposure Statement: This equipment complies with FCC radiation exposure limits set forth for an uncontrolled environment. This equipment should be installed and operated with minimum distance 20cm between the radiator & your body. End users must follow the specific operating instructions for satisfying RF exposure compliance. This transmitter must not be co-located or operating in conjunction with any other antenna or transmitter.

I. OUTLINE

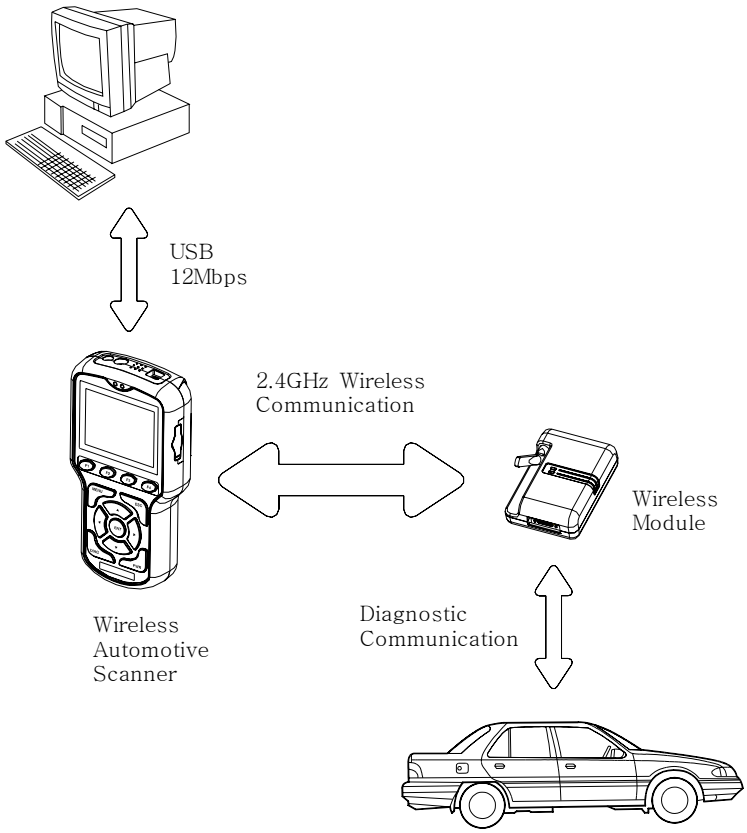

[Picture I-1. Outline]

1. COMPONENTS

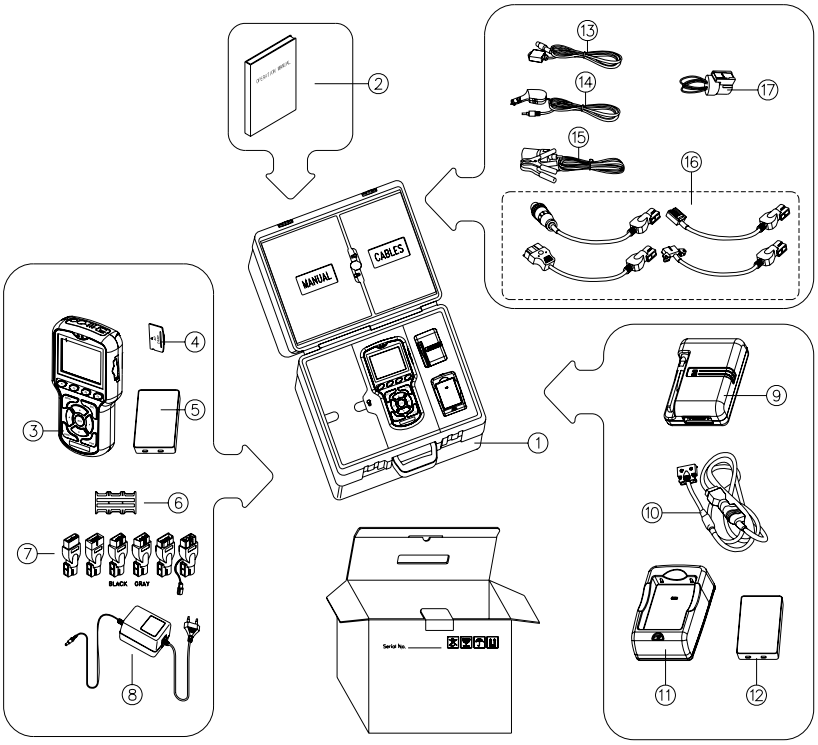

[Picture I-2. Components]

1.1 Components Table

NO	Component Name	Component No.
1	Bag	068-M3012
2	Operating Manual	MJJ-CR6-E0001
3	**Main Body**	**068-E0001**
4	Program Card (built into the main body)	JXD-128
5	Rechargeable Battery (main)	JBT-01
6	Program Card Case	-
7	OBD-II 16P Adaptor	CB-96-0063
	GM Daewoo 12P Adaptor	CB-96-0061
	Ssangyong OBD-II 16P Adaptor	CB-96-0063S
	Kia 20P Adaptor	CB-96-0064
	Kia 6P Adaptor	CB-96-0066
	Renault Samsung/Nissan 14P Adaptor	CB-97-0046
	Proton OBD-II 16P Adaptor	CB-96-0063P
	HONDA 3P Adaptor	068-M1002
	BMW 20P Adaptor	068-M1003
	Toyota Rectangle-17P Adaptor	068-M1004
8	AC/DC Power Adaptor	JAD-12V
9	**Wireless Diagnostic Module**	**068-E0002**
10	Main Cable	068-M1001
11	Battery Charger	**068-E0003**
12	(back-up)Rechargeable Battery(Optional)	JBT-01
13	USB Communication Cable	USB-AB-2M
14	Cigar Lighter Cable	CB-96-0069-02
15	Battery Cable	CB-96-0069-01
16	Ssangyong 14P Adaptor	015-M1002-C
	Ssangyong 20P Adaptor	015-M1001-C
	Hyundai 12P Adaptor	CB-96-0065
	Benz 3P Adaptor	068-M1005
17	Self Test Adaptor	068-M1006

18	Benz 38P Adaptor(Optional)	068-E0004

※ Diagnostic adaptors and cables of No. 7 and 16 may vary depending on product type.

1. 2 Connection System

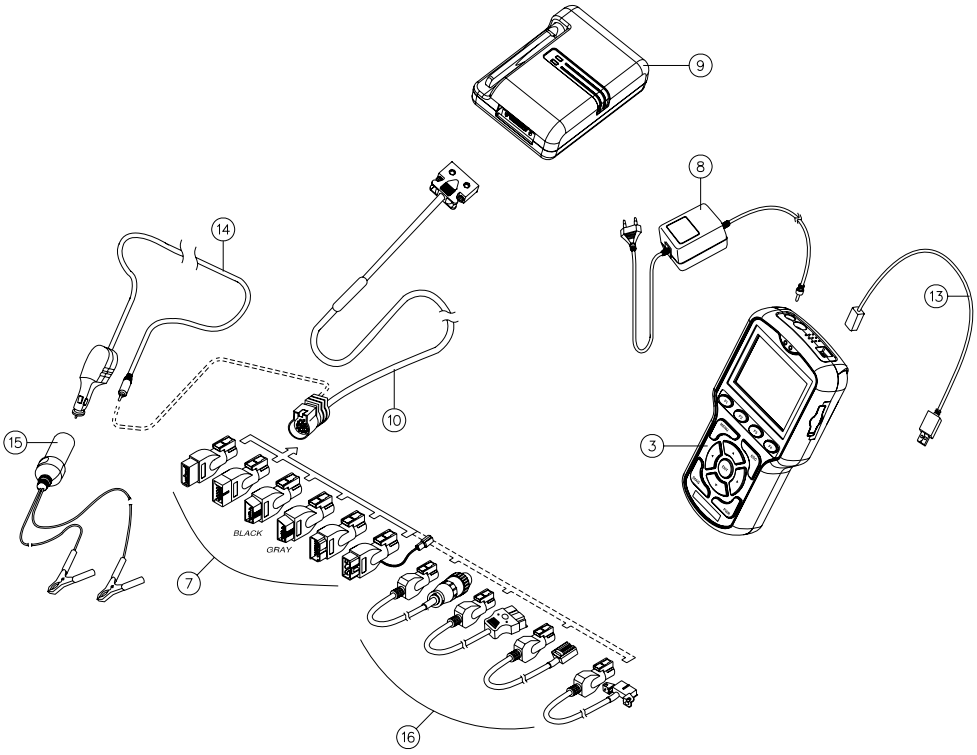

[Picture I-3. Car-Doctor System]

2. FEATURES AND FUNCTIONS

2.1 Features

1) Wireless Communication System

Through the high-speed data transmission function and the application of highly stable wireless system, the Car-Doctor can diagnose a car in close range while moving.

2) 32-BIT High-performance CPU

The 32-BIT high-speed CPU enables faster and more accurate processing of data, and to have various itemized data that are helpful in identifying source in defects diagnosis.

3) Top-notch and highly stable Linux OS

The embedded Linux system effectively and stably manages the system and hardware, software, database, and diagnostic data.

4) Database OS

Efficiency, stability, and security are guaranteed by building the DB on car type and diagnostic data, and the data on a new car can easily be upgraded.

5) Powerful Graphic Function

You can easily spot changes in diagnostic data through the line and bar graphs made by analyzing the diagnostic data.

6) USB Upgrade Function

Easy and high-speed upgrade on a new car is made possible by connecting to a computer through USB.

7) CAN Communication Support

The case is an all-in-one type that combines strong ABS material inside and urethane on its exterior to absorb and withstand shock and this strong and luxurious case was made by applying the latest dual-injection molding technology.

8) Noblesse Case

The case is an all-in-one type that combines strong ABS material inside and urethane on its exterior to absorb and withstand shock and this strong and luxurious case was made by applying the latest double-injection molding technology.

9) User-friendly Design

Handy-type design, high-resolution and easy-to-use LCD that is small and light, with soft-touch key pad and large buttons for easy usage.

2.2 Function

1) MAIN MENU: Car Diagnosis Checkup Function

- Defect Diagnosis and Data Check

  Engine, automatic transmission, ABS, airbag, suspension, traxion, air-conditioner

- Removal of Defects
- Data Analysis and Storage

  Graph Function (Line/Bar Graph)

2) SYSTEM MENU: Setup and Self-diagnosis Function

- Screen Adjustment
- Time Setting
- Sound (buzzer) setting
- LCD TEST
- Battery Capacity
- Memory Capacity
- RF TEST
- System Information

※ RF TEST: check the communication between the wireless diagnostic module and main cable.

3) SNAP-SHOT Analysis

Analyzes the stored data

4) Database Update Function

When diagnostic software for new car is added

5) Firmware Update Function

Adds or complements functions

3. SPECIFICATION

3.1 Main Body

Case	Dark gray and blue, Dual injection
	Interior: ABS material; Exterior : Urethane
Display	Monochrome graphic LCD (Resolution: 320 × 240)
	Power LED (Red/Green), Communication LED (Red/Green)
Key Pad	Material: Rubber Function Keys: 4; Operation Keys: 4; Direction Keys: 4; Power Key: 1
Main CPU	32-Bit High Performance CPU
	Main Clock: 200 MHz (Max. 266 MHz)
OS	Embedded Linux 2.4
Program Card	Type: Flash Memory Card
	Basic 128 MB (can be expanded up to 256/512 MB)
Wireless Communication	Frequency : sharing 2.4-GHz frequency band
	Speed : 125 K–1 Mbps
	Ultra-sensitive Built-in Antenna
PC Communication	USB 1.1 Full Speed (12 Mbps)
	RS-232 Communication (service functions including A/S)
Rechargeable Battery	Runtime : over three consecutive hours (when completely charged)
	Recharge Time: within two hours
	Final Charge Voltage: 8.0–8.4 [V] , 1700 [mAH]
External Power	DC 11 ~ 30 V Input
Power Consumption	Below 4 W (But, Max. 9.4 W in charging)
Size [mm]	Width: 120 Length: 225 Thickness: 47
	Weight: 645 [g] (with battery: 115 [g])

3.2 Wireless Diagnostic Module

Case	Dark gray and blue, Dual injection
	Interior: ABS material; Exterior : Urethane
Display	Power LED (Red/Green), Communication LED (Red/Green)
Wireless Communication	Frequency : sharing 2.4-GHz frequency band
	Speed: 125 K–1 Mbps
	Ultra-sensitive Built-in Antenna , 90˚ rotation
Vehicle Communication	26 PIN Input/Output Terminal (power input, communication input/output)
	Supporting all the vehicle interfaces including NRZ, UART, RS-232C, CAN, PWM, VPWM, CLOCK, and PULSE.
Operating Temperature	0℃ – 50℃
Input Power	Inputting DC 9 ~ 30V of vehicle battery power
Power Consumption	Below 3W
Size [mm]	Width: 82 Length: 117 Thickness: 36
	Weight : 222 [g]

3.3 Environmental Features

Condition	Feature
Temperature	Operating Temperature: 0 to 50℃ (32 to 104˚F)
	Storage Temperature: –40 to 70℃ (–40 to 158˚F)
Relative Humidity	Operating Humidity: 15% to 95% at 40℃
	Storage Humidity: 90% at 65℃

4. Main Body

4.1 External Shape

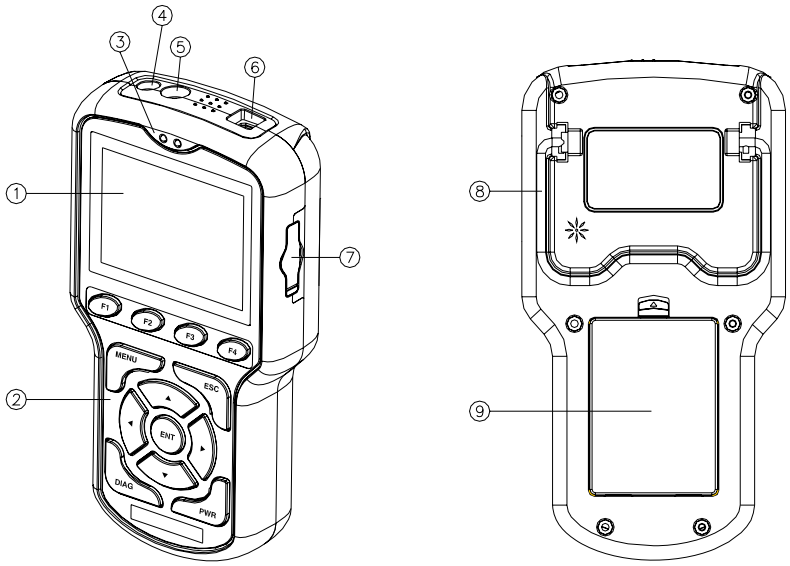

① LCD Screen

② Key Pad

③Status LED Display

④ Power Connector

⑤ RS-232 Port

⑥ USB Port

⑦ Program Card Slot

⑧Main Body Support

⑨Rechargeable Battery

[Picture I-4. External Shape]

4.2 Key Pad Components

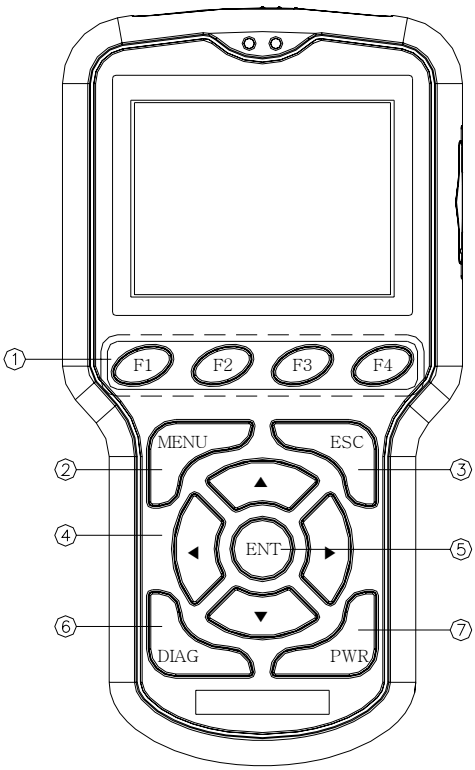

① Function Key F1,F2,F3, F4

② MENU Key

③ ESC Key

④ Direction Key ◀, ▶, ▲, ▼

⑤ ENTER Key **ENT**

⑥ Diagnosis Key **DIAG**

⑦ Power Key **PWR**

[Picture I-5. Key Pad]

4.3 Key Function

Component		Function
Function Key F1, F2, F3, F4		Four function keys are located on right below the LCD screen. Because the functions vary according to each mode, the mechanic can select the desired item and display it at each mode. Function Key Operation for Car Diagnosis and Checkup - F1 (Item Fixing): Fixing the item the cursor selected - F2 (Item Cancel): Canceling the fixed item - F3 (Line Graph): Display the item that the curser fixed with line graph - F4 (Bar Graph): Display the item that the curser fixed with bar graph.
MENU Key		Basic Menu MAIN - SYSTEM - PRINT - DOWNLOAD, etc Press MENU to display the Selection screen.
ESC Key		Close the current screen and exit. Back to previous menu screen.
Direction Key	Up/Down ▲ ▼	Move the cursor up or down on the selected screen.
	Left/Right ◀ ▶	Move the cursor to the left and right at the selected screen. Used in page transfer in the screen where several page exist. (◀: Page Up, ▶: Page Down)
ENTER Key **ENT**		Select the item when the cursor is located. Transfer into the selected menu screen
Diagnosis Key **DIAG**		Quick Diagnostic Function Move to the car type menu that was recently diagnosed.
Power Key **PWR**		Turn the power on and off. Press it for over 4 seconds, and the power will go off.

4.4 Status LED Display

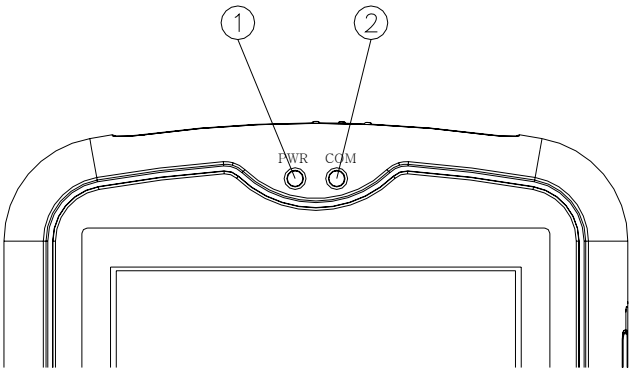

① PWR: Power LED ② COM: Communication LED

[Picture I-6. LED Display]

4.4.1 PWR LED: Upper Left

Displays the current status of power and battery

Power ON	**No Lighting**	Normal state
	Red Lighting	Charging state
	Green Lighting	Indicates proper charging state
	Yellow Lighting	Indicates the battery is fully charged (charging completed)
Power OFF	**Red Blinking**	Indicates the need for charging and battery replacement
	Red Lighting	In use
	Green Lighting	Indicates proper charging state
	Yellow Lighting	Indicates full charging state

Note: When the PWR LED blinks in red while in use, supply the power or replace the battery. If not, battery discharge may occur and the device will lose power.

4.4.2 COM LED: Upper Right

Display the current wireless communication status (Communication Status with Wireless Module).

- Red Lighting: Data Transmission
- Green Lighting: Data Receipt
- In case wireless communication is in normal state in diagnosing a car, the red and green lights at COM LED come out alternately, or yellow light comes out.

5. WIRELESS DIAGNOSTIC MODULE

5.1 External Shape & Connection

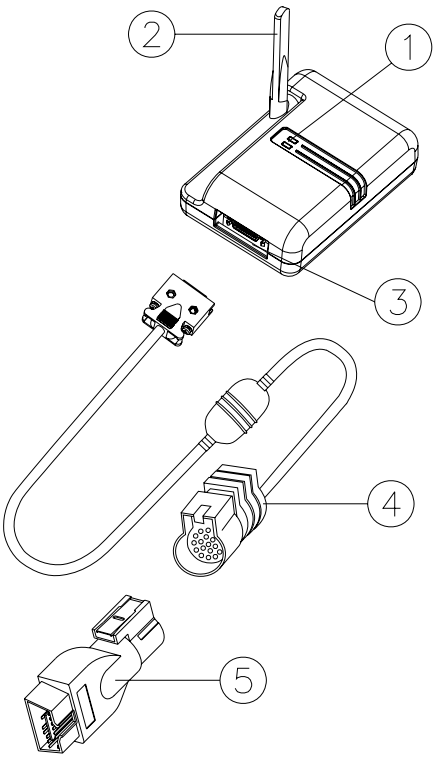

① Status LED Display ③ Main Connector (26 PIN) ⑤ Car Adaptor

② Antenna ④ Main Cable (26–19 PIN)

[Picture I-7. Wireless Module]

Connection Sequence

① Connect main cable 26-pin connector to the main connector (put it to full until it is clicked).

② Connect the car adaptor to the main cable 19-pin adaptor.

③ Set the antenna upright up to 90°

5.2 Status LED Display

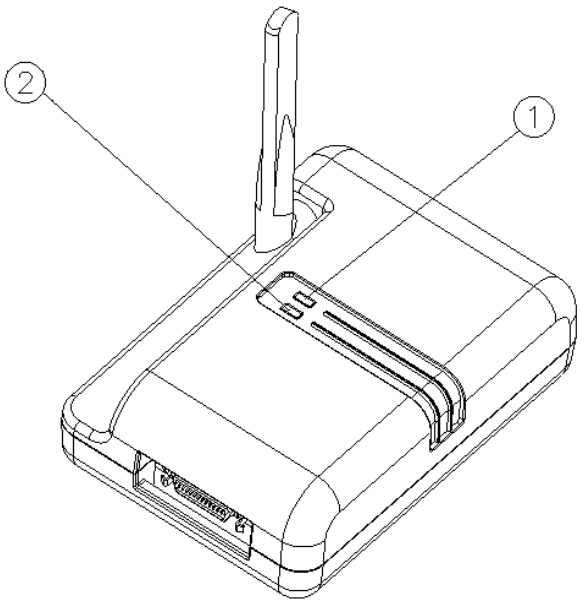

① PWR: Power LED ② COM: Communication LED

[Picture I-8. Status LED Display]

5.2.1 PWR LED: Red LED

Display the current power state.

If the power is turned on, the red light comes on.

5.2.2 COM LED: Upper Right

Display the current vehicle communication status.(Communication Status between Wireless Module and Vehicle)

- **Red Lighting: Data Transmission**
- **Green Lighting: Data Receipt**
- In case the communication with the vehicle is in normal state, the red and green lights at COM LED come out alternately, or yellow light comes out.)

5.3 Vehicle Connection

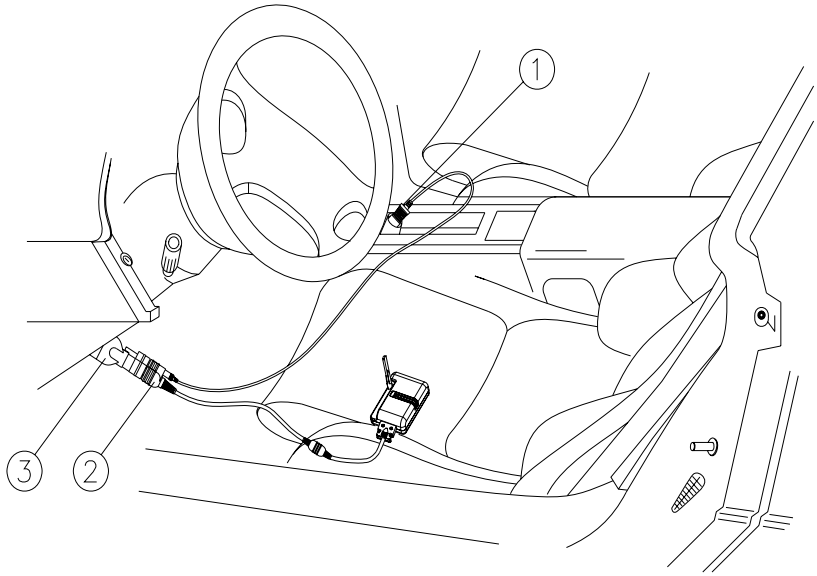

① Cigar Lighter Cable ② Main Cable ③ Car Adaptor

[Picture I-9. Vehicle Connection]

Picture 1-9 shows how to connect the Car-Doctor to the diagnostic connector of the vehicle.

☑ Connect cable to the diagnostic connector of vehicle

☑ KEY-ON vehicle or start the vehicle

☑ If normally connected, PWR LED lights red

Note :

It is not needed to connect the cigar lighter cable in diagnosing and checking the vehicle, because the vehicle battery power is supplied to the wireless module. (For with some *vehicles, however, cigar lighter cable is needed to supply power).*

5.4 Cigar Lighter Power Supply

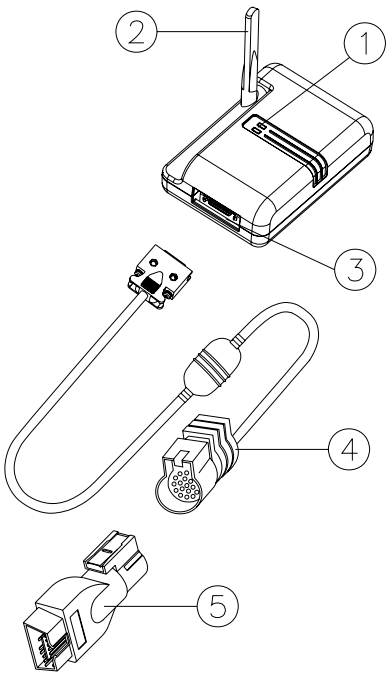

① Main Cable ② Cigar Lighter Cable DC Jack

[Picture I-10. Cigar Lighter Power Connection]

The wireless module receives the battery power of the vehicle through the main cable. However, power may not output through the diagnostic connector in some vehicles. In this case, its power can be supplied by connecting the cigar lighter cable.

6. COMPUTER CONNECTION

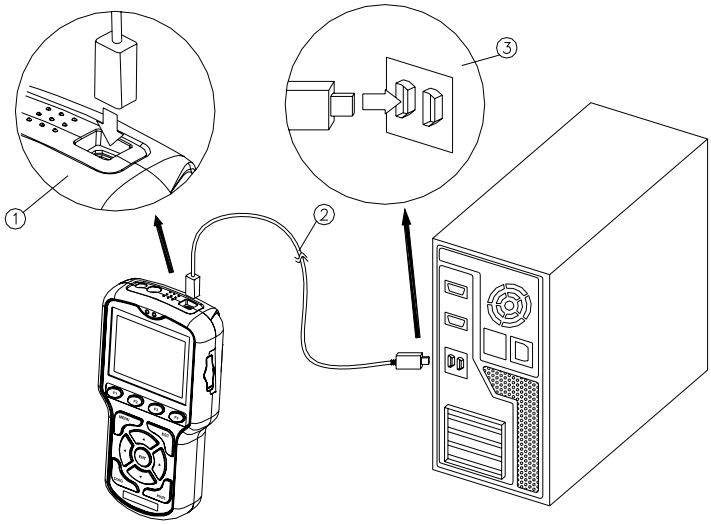

① USB-B Connector ② USB Cable ③ USB-A Connector

[Picture I-11. Computer Connection]

The Car-Doctor supports the communication with the computer with its expanded function.

Connection Method

☑ Insert the B connector of the cable into the USB connector on the upper side of the main body.

☑ Insert the A connector of the cable into the USB port of the computer

Connection Function

☑ Diagnosis data management and back-up (data upload & download)

☑ Diagnosis data output

☑ Vehicle DB update

☑ Diagnostic system firmware update

※ For further details, see the PC program manual.

7. AC/DC POWER ADAPTOR

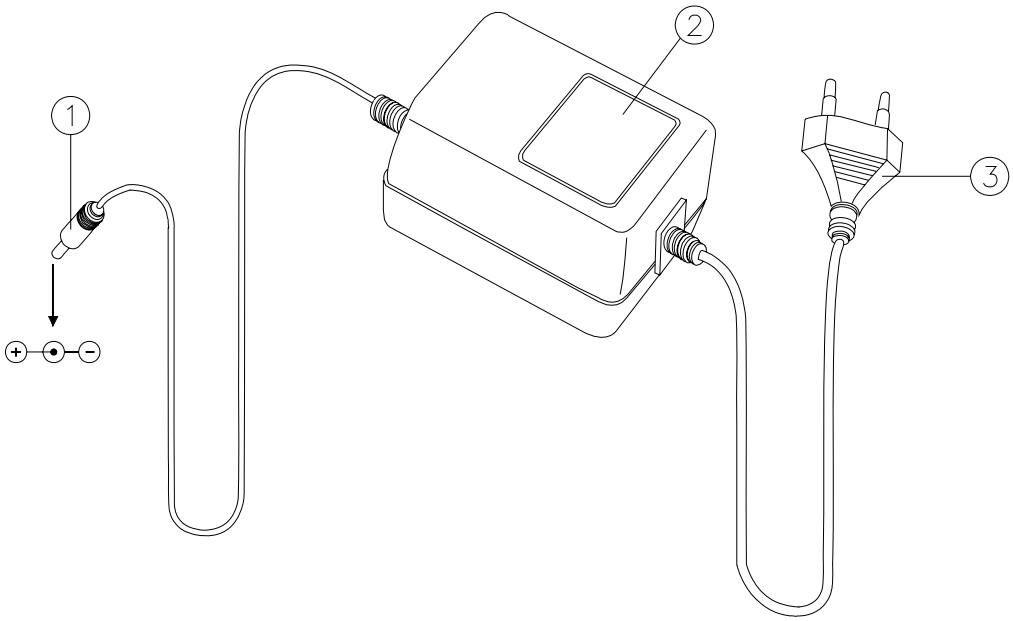

① Power Supply Jack ② AC/DC Power Adaptor ③ AC Power Plug

[Picture I-12. AC/DC Power Adaptor]

☑ AC/DC power adaptor is used for charging and external power supply.

☑ Input: AC 100–230V, 50/60Hz

☑ Output: DC 12V/1.2A

CAUTION!

Please use only the AC/DC power adaptor provided with the device. Unauthorized products may seriously damage the equipment. We are not responsible for any defect caused by using other products or power adaptors.

8. RECHARGEABLE BATTERY

8.1 Insertion and Removal

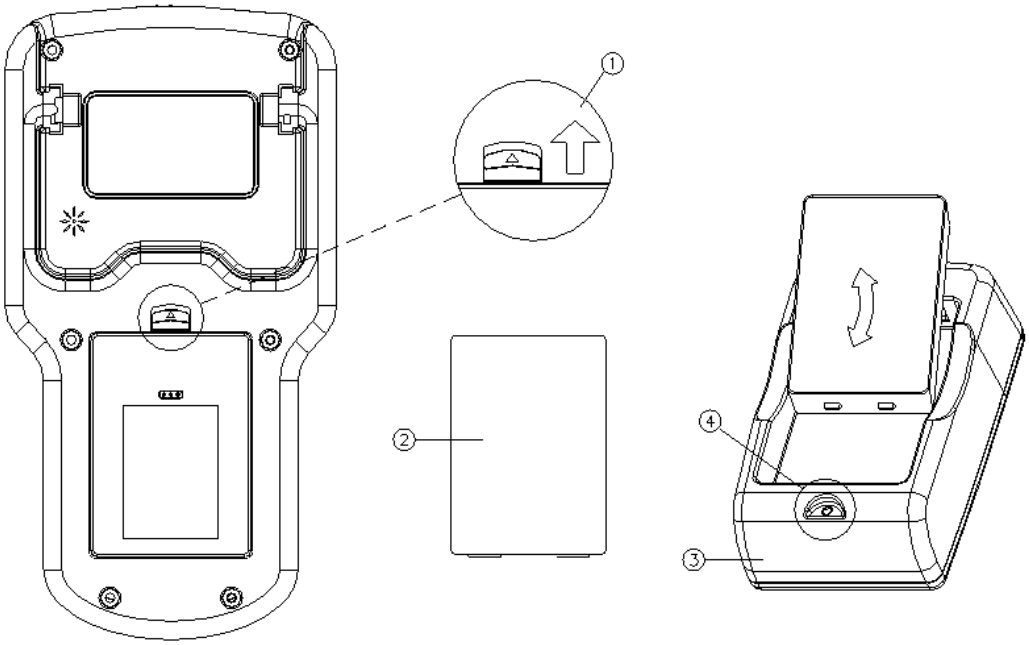

① Lock Lever

② Rechargeable Battery

③ Charger

④ PWR LED

[Picture I-13. Battery Insertion/Removal]

☑ **Removal**: Push up the lock lever on the back of the main body as seen in the above picture, then slightly pull the upper part of the battery.

☑ **Charging**: Insert the battery as seen in the above picture to begin charging. In case the insertion is properly done, the PWR LED turns on.

(Red, Green, or Yellow light comes on according to the charging conditions.)

☑ **Insertion**: Insert the battery so that the main body and contact pin terminal of the battery can be in contact with each other. Insert it by pressing inward after the projecting part of the lower part of battery and the two grooves on the lower battery insertion part of the main body have been in contact

with each other.

Press the battery firmly until the lock lever clicks. If the battery is not firmly in place and falls out, it may be damaged.

8.2 Charging

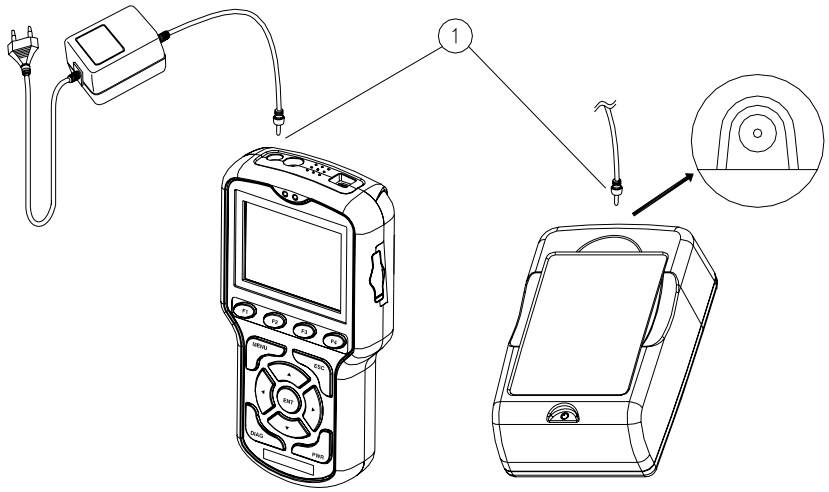

① AC/DC Power Adaptor DC Jack

[Picture I-14. Power Connection for Charging]

The Car-Doctor can be also charged in its main body. In addition, it can be charged with the provided charger and back-up battery.

Charging Method

☑ Supply power by connecting AC/DC power adaptor.

☑ Charging is available while using the main body.

(For fast charging, please turn off the device while charging the battery)

☑ Checking the charging status through PWR LED is available.

☑ If necessary, battery charging can be done by battery charger.

PWR LED Status

No Lighting	When AC/DC power adaptor is not connected
Red Lighting	**Currently charging**
Green Lighting	**Proper charging state**

Yellow Lighting	**Fully charged state (completed)**

☑ If charging is completed, use the battery after pulling out AC/DC power adaptor.

※ Both the main body and charger have a built-in protection circuit, which prevents the battery from overheating due to excessive charging (prevents from overheating and explosion).

8.3 Li-ion Rechargeable Battery

8.3.1 Specifications

Car-Doctor uses Li-ion rechargeable battery (The Li-ion battery is of good quality and its expected lifespan is much longer than existing Ni-Cd or Ni-Mh batteries).

☑ Final Charge Voltage: 8.0–8.4 [V], 1700 [mAH]

☑ Recharging Time: Within two hours

☑ Runtime: Over four consecutive hours (when completely charged)

8.3.2 Battery Charging

In case PWR LED blinks (repeats on and off), which indicates that battery capacity is insufficient, please replace or recharge the battery.

8.3.3 Expected Life Span & Replacement Cycle

The more the Li-ion battery is used or recharged, the shorter is its lifespan. It is recommended to check it periodically (once every six months) or to replace it (once a year).

9. PROGRAM CARD

9.1 Installation and Removal

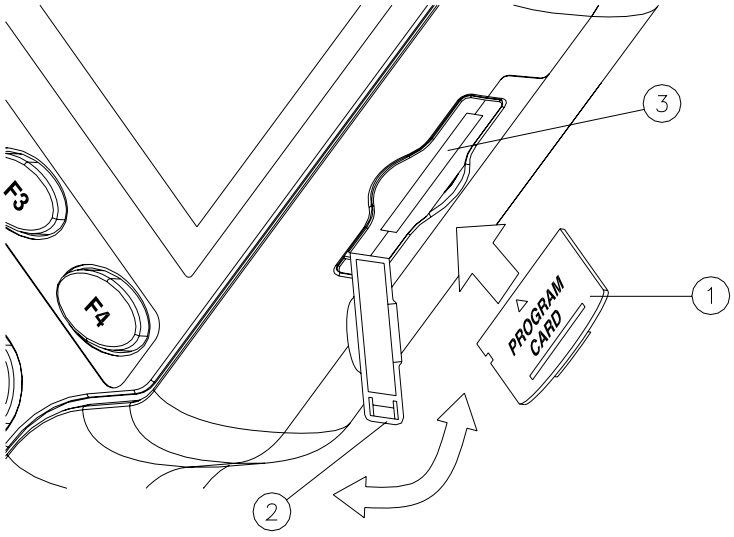

① Program Card ② Card Protection Cover ③ Card Connector

[Picture I-15. Program Card Installation]

Program Card Removal

☑ After turning off the power, open the card protection cover downwards and pull out the end of the program card inserted in connector.

Program Card Installation

☑ Insert the program card in the connector as seen in the above picture.

☑ Turn on the power.

(Power Reset! In case the replacement was done when the power is on, turn off the device and turn it on again. If the power is not reset, the existing card program, not the new program, is operated.)

Note: Data Back-up
If there's stored data, transmit and save the data to the computer (by uploading through USB), and replace the program card.

9.2 Program Card

The program card has built-in flash memory.

With the high capacity of basic 128 MB, one card is enough for the diagnosis and data storage.

Power: 3 V (3.3 V)

Size (P x L x H): 20 mm x 25 mm x 1.7 mm

Weight: 2 g

II. HOW TO USE

1. POWER ON / OFF

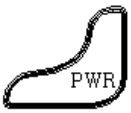

Press the power key on the lower left side to turn on the power and boot up the Car-Doctor.

1.1 Booting

Turning on the device boots up the Car-Doctor.

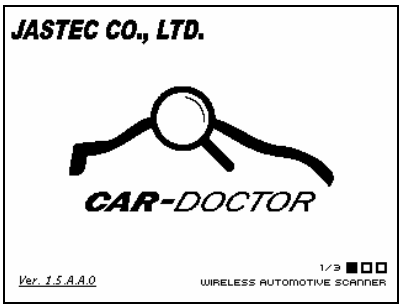

Boot Screen

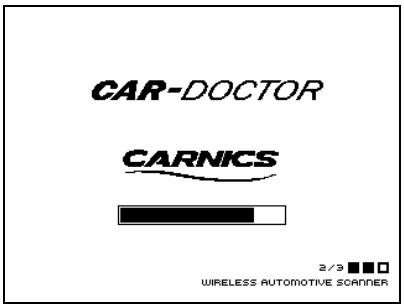

→ During boot up of the OS....

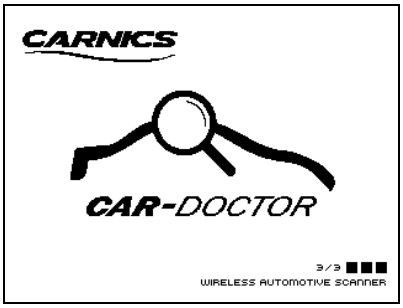

→ During boot up of application....

→ During boot up of database....

It takes approximately 50-60 seconds to complete the boot up.

Do not turn off or operate the Car-Doctor during boot up.

1.2 Power Off

Press the power key, and the screen as shown below will be displayed. Select "POWER OFF" in the middle by pressing Left/Right (◀ / ▶) key to turn off the power. Selecting “LCD OFF” turns off the LCD by the power-saving function. The power-saving function enables longer use of the Car-Doctor. If you want to use it again, just press any key to turn on the LCD.

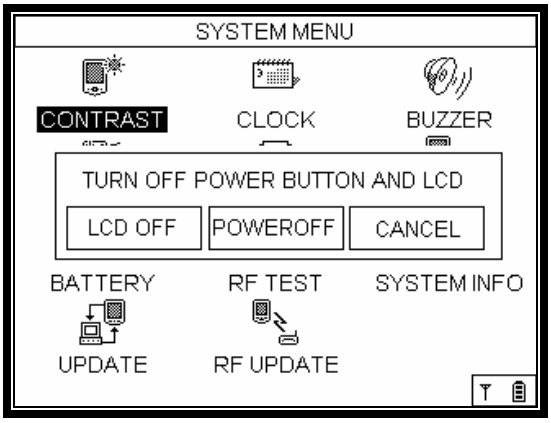

Picture 1 [Power Off Screen]

Note: Press the power key of the Car-Doctor for 4–5 seconds to force shutting off the power. Please do this when the operation is abruptly stopped due to unknown reasons or any defect caused by internal/external shocks, or noise.

1.3 Antenna & Remaining Battery Capacity

In the lower right side of the screen, the communication status and the remaining battery capacity are displayed as shown below.

The left icon indicates the status of wireless communication. While the vehicle diagnosis is being done, the antenna icon appears with full bars; otherwise, when reception is poor, the antenna icon shows few or no bars at all.

The right icon indicates the remaining battery capacity. If the icon shows only one block or none, the battery should be recharged.

2. MENU

How to Select: Press the Menu key, and the menu item will pop up in a box on the lower left.

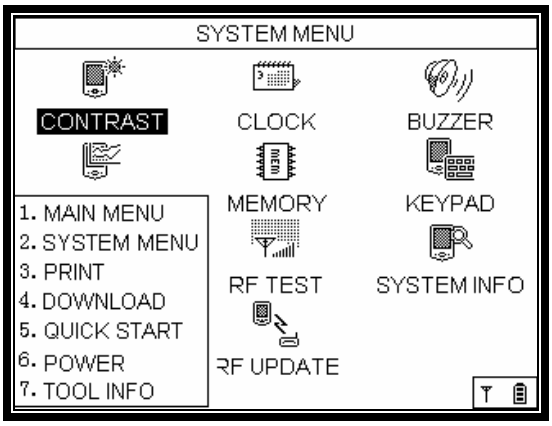

Picture 2.1 [Menu Screen]

The menu item appears by pressing the MENU on the key pad.

This menu item includes:

1. MAIN MENU
2. SYSTEM MENU
3. PRINT
4. DOWNLOAD
5. QUICK START
6. POWER
7. TOOL INFO

By using this menu item, the user can shift to the diagnosis or system setup screen. QUICK START is to instantly run user's preset item. The following are the details on each menu item.

2.1 MAIN MENU

Select MAIN MENU.

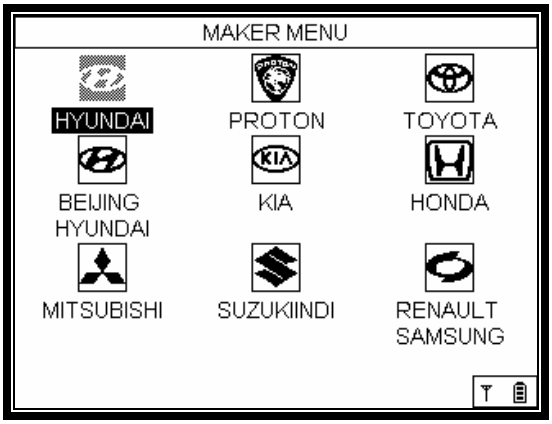

Picture 2.2 [The screen after selecting Main Menu]

The MAIN MENU shows car makers that the user may choose corresponding to the vehicle to diagnose. Press the Enter key (↵) after selecting MAIN MENU to go to the screen of car maker selection.

2.2. SYSTEM MENU

Select SYSTEM MENU.

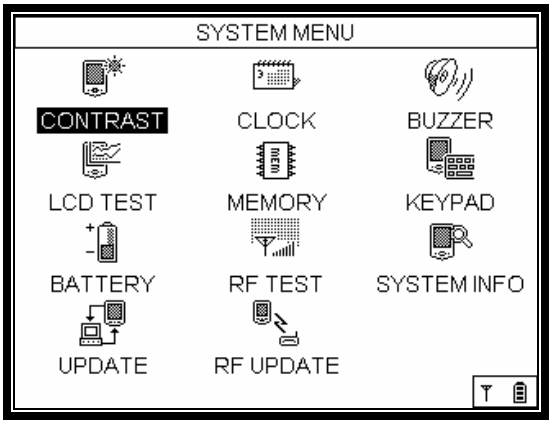

Picture 2.3 [SYSTEM Setup Screen]

The system-related mode of the Car-Doctor gives the information on the equipment of the main body and memory capacity. With this mode, one can check and adjust settings for brightness/contrast, clock, battery info, LCD test, buzzer, and RF test. It plays an important role in effective maintenance.

2.3 PRINT

Select PRINT.

This is the mode that allows the user to save the current screen on the LCD. Select PRINT, then the current LCD screen will be saved as a picture file.

2.4 DOWNLOAD

Select DOWNLOAD.

This is to update software and transmit the screen capture file to the personal computer.

2.5 QUICK START

How to Select: Press the Menu key, and select QUICK START.

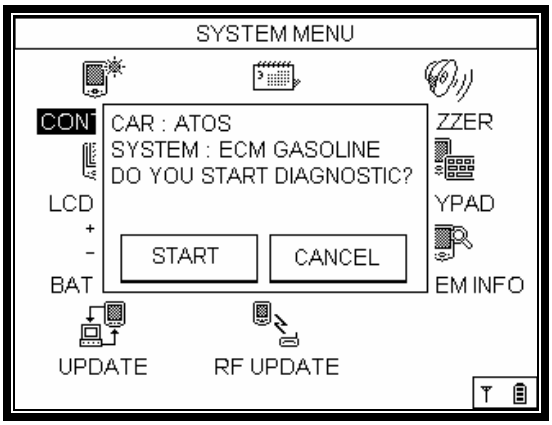

Picture 2.4 [The screen after selecting QUICK START]

QUICK START allows the user to save the item that was recently diagnosed. The Car-Doctor should be used at least once to use QUICK START. The Car-Doctor saves the last diagnosed item, and QUICK START enables to directly run the saved item. The above picture shows the screen when QUICK START is selected.

2.6 POWER

Select POWER.

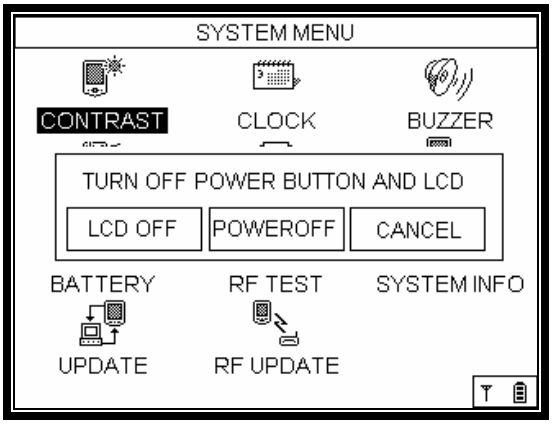

Picture 2.5 [Power Key Screen]

By selecting POWER, it shows the LCD OFF, POWER OFF, and CANCEL items. LCD turns off when chose LCD OFF menu. To switch on the LCD, just press the Enter key (↵). To turn off the main body, select the POWER OFF Key.

2.7 TOOL INFO.

How to Select: Press the Menu key, and select TOOL INFO.

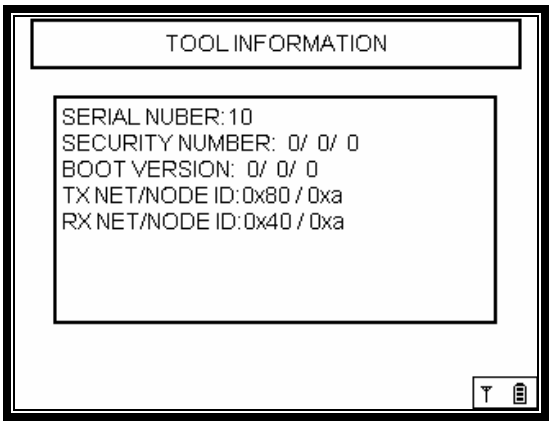

Picture 2.6 [TOOL INFO screen]

The TOOL INFO displays the Car-Doctor-related information on equipment, version, and DB, etc. This item can also be accessed by selecting the TOOL Info icon on the SYSTEM MENU.

3. MAIN MENU (DIAGNOSIS)

3.1 Car Selection

The following is the flowchart of Car-Doctor's diagnosis. It is composed of car maker selection menu, car selection menu, diagnosis item selection, and detailed item selection.

[Car Maker Selection]

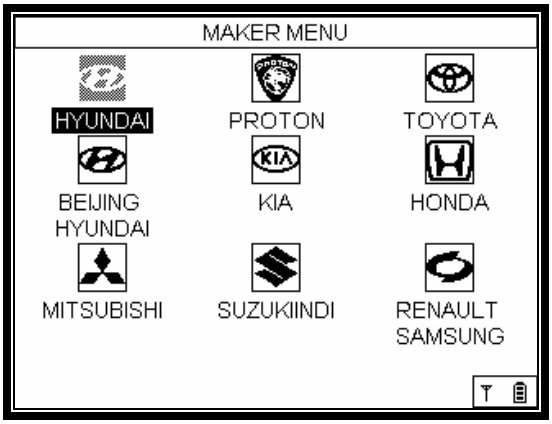

Picture 3.1 [Maker Menu Screen]

When the user runs the Car-Doctor, the first screen that appears is the car maker menu. In this screen, press Enter key (↵) after selecting the maker of the car the user wants to diagnose.

[TRANSFER] Select Car Maker (using the up/down and left/right arrows) → Press Enter key(↵)

[NEXT] Car Selection

[Car Selection]

Picture 3.2 [Vehicle Selection Screen]

This screen displays the list of different car models under a particular car maker. After selecting a car to be diagnosed, please press the Enter key (↵). The diagnosable systems of the selected car will be displayed in the next screen

[TRANSFER] Select car model (using the up/down and left/right arrows)

→ Press Enter key (↵)

[NEXT: ↵] System Selection

[PREVIOUS: ESC] Car Maker Selection

[System Selection]

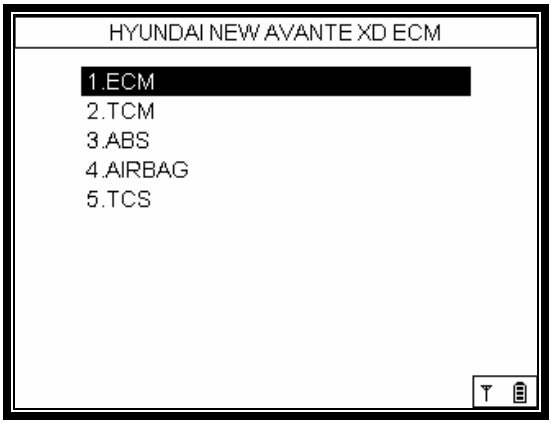

Picture 3.3 [Diagnosis Items]

The above screen lists the diagnosable systems of the selected car. Select the system you want to diagnose, and press the Enter key (↵).

[TRANSFER] Select system (using the up/down and left/right arrows) → Press Enter key (↵)

[NEXT: ↵] Detailed Item Selection

[PREVIOUS: ESC] Car Selection

[Detailed Item Selection]

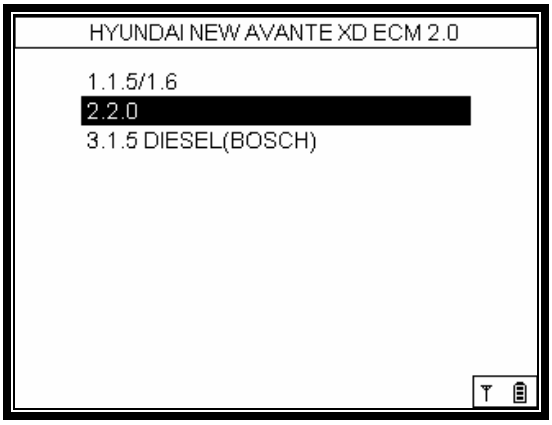

Picture 3.4 [Detailed Item Selection]

The above screen shows the detailed items of car. After selecting one of the items to be diagnosed, please press the Enter key (↵).

[TRANSFER] Select item (using the up/down and left/right arrows) → Press Enter key (↵)

[NEXT: ↵] Diagnosable Item Selection

[PREVIOUS: ESC] System Selection

[Diagnosable Item Selection]

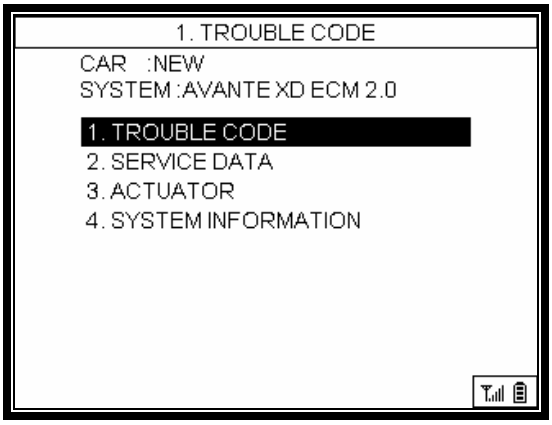

Picture 3.5 [Diagnosis Item on Engine Type 2.0]

The above screen shows the items that can be diagnosed.

[TRANSFER] Select item (using the up/down and left/right arrows) → Press Enter key (↵)

[PREVIOUS: ESC] System Selection

3.2 Self-Diagnosis

[Car Maker Selection] → [Car Selection] → [System Selection] → [Detailed Item Selection] → [Diagnosable Item Selection] → [1. Self-Diagnosis Selection]

Selecting a detailed item in picture 3.4 displays the diagnosable items, as seen in picture 3.5. Select Self-Diagnosis item among the diagnosable items.

[Self-Diagnosis]

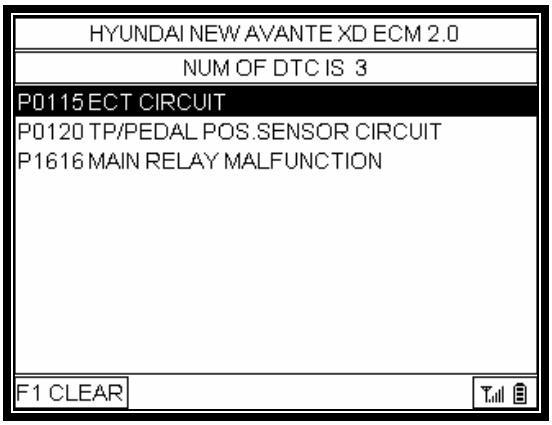

Picture 3.6 [Diagnosis Code Output Screen]

In case an error occurs with the selected ECM, the fault code is displayed in the screen. To clear the fault code, press the F1 key.

※ Clear: The F1 key is used to clear the error code to be printed out after diagnosis. Pressing F1 deletes the item.

3.2 Service Data

[Car Maker Selection] → [Car Selection] → [System Selection] → [Detailed Item Selection] → [Diagnosable Item Selection] → [2. Service Data Selection]

Selecting the detailed item in picture 3.4 shows the diagnosable items as seen in picture 3.5. Select Service Data item among the diagnosable items.

[Service Data]

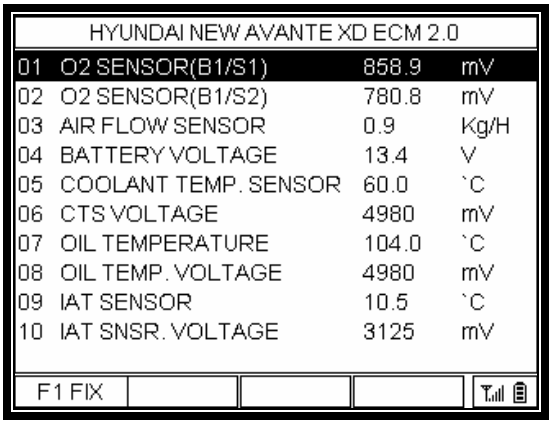

Picture 3.7 [Sensor Data Output Screen]

Picture 3.7 is the output screen on the service data. This item displays the data of various kinds of sensors. Press F1 key to FIX the selected item.

Use ▲,▼(up/down) to see the service data values, Using ◀, ▶ (left/right) enables to access the next ten service data.

FIX

Press this key to fix the selected item. Although the user moves to the other item using ▲, ▼ key, the fixed item by FIX key is always at the same location. It is useful to directly compare the data of fixed item and those of the other specific items. (*) marks the fixed item, then press the FIX key (F1) again to cancel.

3.3 How to Use the Actuator Mode

[Car Maker Selection] → [Car Selection] → [System Selection] → [Detailed Item Selection] → [Diagnosable Item Selection] → [3. Actuator Selection]

Selecting the detailed item in picture 3.4 shows the diagnosable items as seen in picture 3.5. Select Actuator item among the diagnosable items.

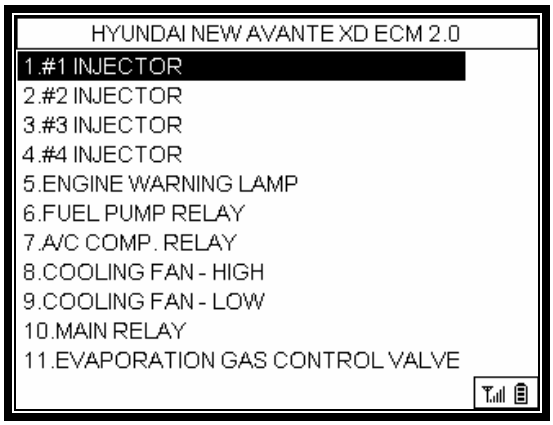

Picture 3.8 [Actuator Items]

This is the mode to forcibly start and stop the actuator using the Car-Doctor. Selecting the actuator function displays the actuator items that can be forcibly started or stopped. Select the desired item, and press the Enter key (↵).

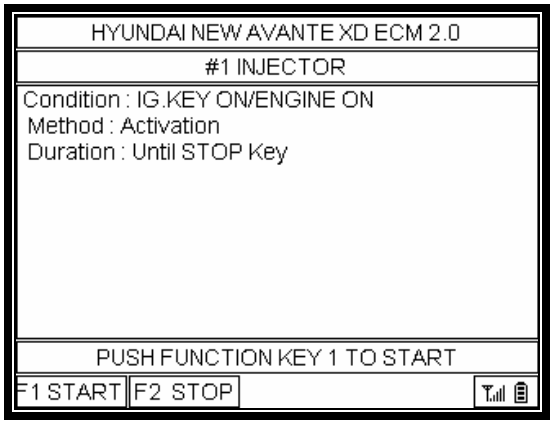

Picture 3.9 [Actuator Start/Stop]

Change the vehicle status into the status specified in the test conditions before the actuator test. In case there's test time, press the F1 START button, and the actuator will be operated during the test time and will automatically stop. In case there's no test time, press the F1 START button to begin the test, and press F2 STOP to finish the test.

3.4 ECU ID Check

[Car Maker Selection] → [Car Selection] → [System Selection] → [Detailed Item Selection] → [Diagnosable Item Selection] → [4. ECU ID Check Selection]

Selecting the detailed item in picture 3.4 shows the diagnosable items as seen in picture 3.5. Select ECU ID Check item among the diagnosable items.

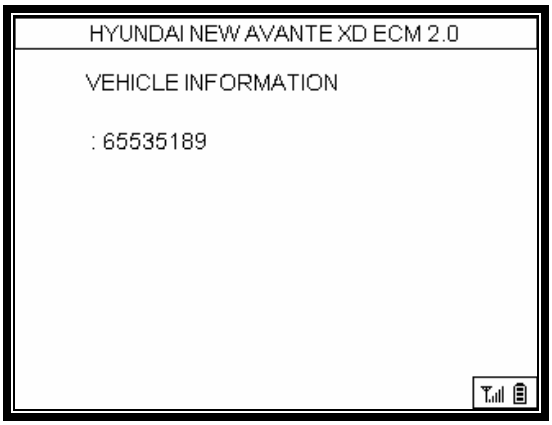

Picture 3.10 [ECU ID]

Select ECU ID Check to see the information of the relevant ECU.

4. SYSTEM MENU

4.1 LCD Brightness Control & Save Mode Time Setting

Select contrast icon on the SYSTEM MENU.

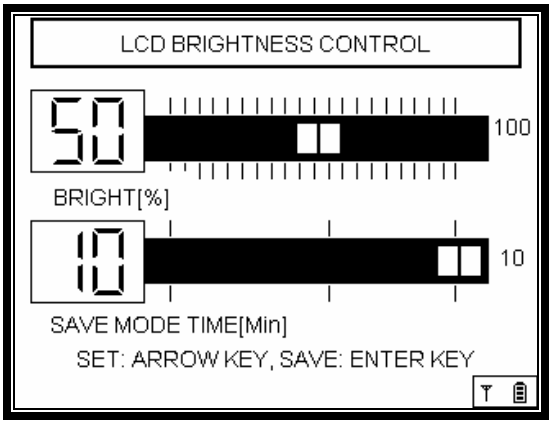

Picture 4.1 [LCD Brightness Control Screen]

4.1.1 LCD Brightness Control

Follow the succeeding instructions to adjust the LCD brightness of the Car-Doctor.

The direction keys ◀ and ▶ let the user adjust the LCD brightness.

Press ◀ to decrease the screen's brightness.

Press ▶ to increase the screen's brightness.

Note: Any drastic or sudden change in ambient temperature also changes the brightness of the LCD. If temperature dips below 0℃ or climbs over 40℃, the brightness should be readjusted manually.

4.1.2 Save Mode Time Setting

Using direction keys ▲ and ▼, the Save Mode Time can be adjusted. You can set the save time from a minimum of 1 minute to a maximum of 10 minutes.

4.1.3 Saving

To save the newly set value, press the Enter key (↵) (the message that saving was done will be displayed). To return to the previous item, select the ESC key.

4.2 Clock Setting

Select the clock icon on the SYSTEM MENU.

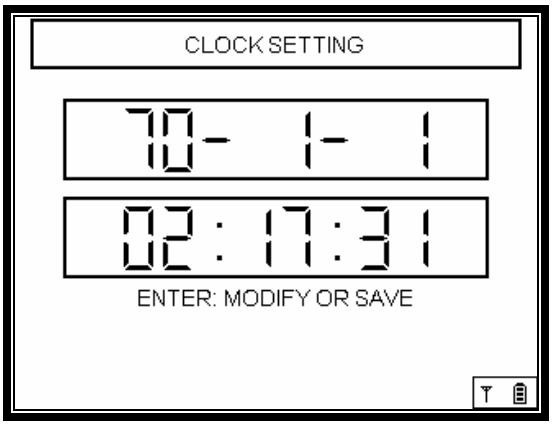

Picture 4.2 [Clock Setting Screen]

The time should be set the first time the Car-Doctor is used. Setting the time is done as follows;

☑ Left/Right (◀ and ▶) Key: Allows the selection of year, month, day, hour, minute, and second.

☑ Up/Down (▲ and ▼) Key: Can modify the value

① Pressing the Enter key (↵) first, the Hour item will blink.

② Use ▲ and ▼ to set the value of the blinking item.

③ Transfer to the next item using ◀ and ▶ to set the value of the next item.

④ When done, press the Enter key (↵) to save the settings.

(A message will appear to indicate saving is successful.)

⑤ To return to the previous item, select the ESC key.

4.3 Buzzer Setting

Select the Buzzer icon on the SYSTEM MENU.

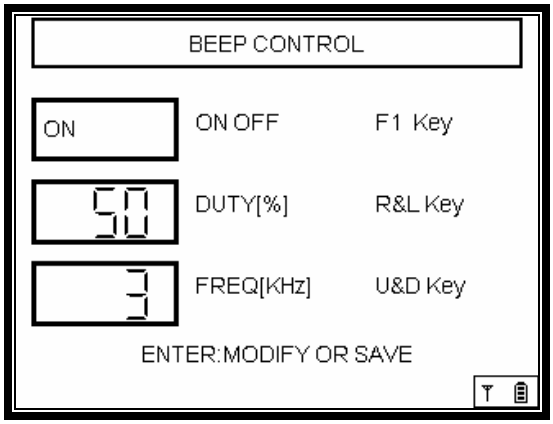

Picture 4.3 [Buzzer Setting Screen]

Car-Doctor can set the sounds when you press keys.

This is the way to set the buzzer.

☑ Left/Right (◀, ▶) Key: Sets the volume of the buzzer.

(The bigger or smaller the number is, the stronger or weaker the sound is.)

☑ Up/Down (▲, ▼) Key: Sets the pitch of the buzzer.

(The bigger or smaller the number is, the higher or lower the pitch is set.)

☑ Enter Key (↵): Saves the settings.

(A message will appear to indicate saving is successful.)

☑ ESC Key: Returns to the previous item.

4.4 LCD TEST

Select the LCD Test icon on the SYSTEM MENU

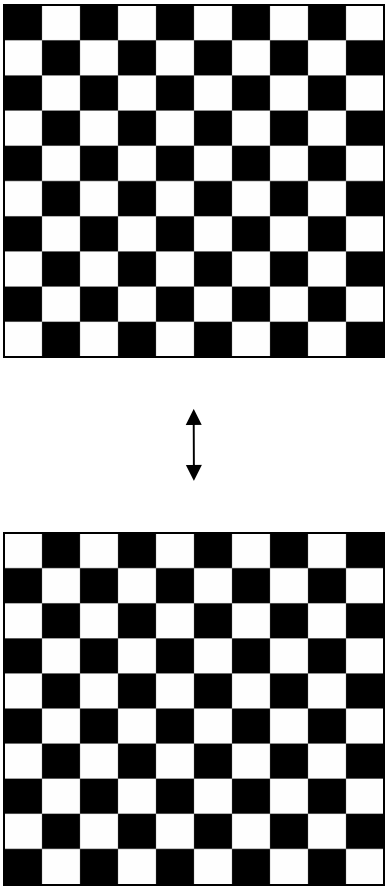

Picture 4.4 [LCD TEST Screen]

The Car-Doctor can check whether the LCD has Dot Defect through the LCD Test. As seen in picture 4.4, the screen is reversed every second, during which the user must check for any pixel defect. To return to the previous item, select ESC key.

Note: Car-Doctor LCD consists of 320 × 240 pixels.

4.5 Memory Information

Select Memory icon on the SYSTEM MENU

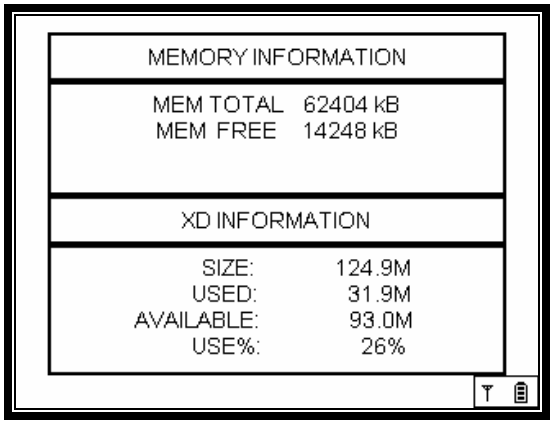

Picture 4.5 [Memory Information Screen]

The Car-Doctor shows the internal memory capacity of the equipment, the memory capacity, and the used capacity of the program card.

- ☑ Picture 4.5 shows the information on memory capacity and used capacity of the equipment in the upper menu.
- ☑ The lower menu shows the information on the program card. The memory capacity of the card, used capacity, and available capacity are indicated, and the proportion of card use is indicated in percent.
- ☑ To return to the previous item, select ESC key.

4.6 KEY TEST

Select KEY PAD icon on the SYSTEM MENU.

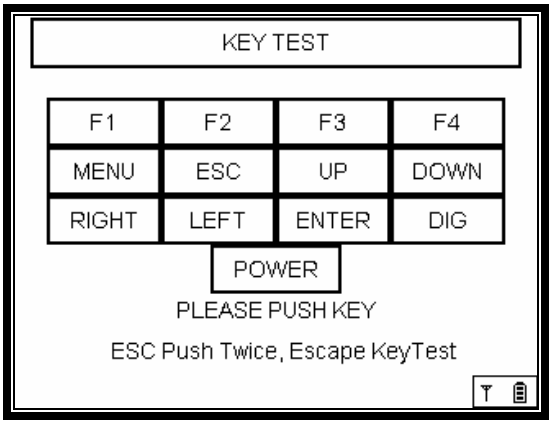

Picture 4.6 [KEY PAD Screen]

To check whether there's any problem in keys, press any key. Then the key you pressed will be reserved to check the problem.

☑ To return to the previous item, select the ESC key.

☑ To return to the System Menu after checking KEY PAD, press the ESC key twice.

4.7 Battery Voltage Information

Select Battery icon on the SYSTEM MENU.

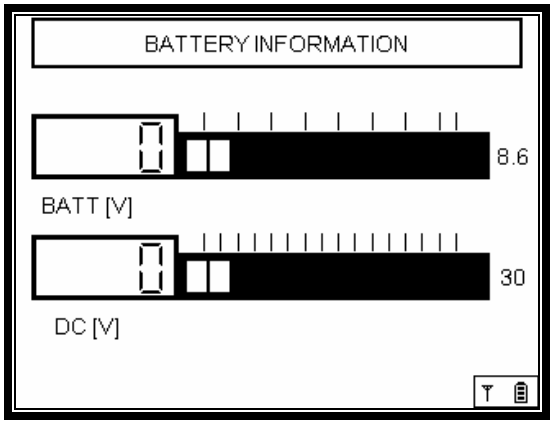

Picture 4.7 [Battery Voltage Info Screen]

☑ The upper graph indicates the current battery voltage.

In case the battery voltage is low, please recharge.

☑ The lower graph indicates the DC input voltage (external power).

☑ To return to the previous item, select the ESC key.

4.8 RF-TEST

Select RF-TEST icon on the SYSTEM MENU to access the TEST screen.

The following shows the way to connect.

4.8.1 How to Connect

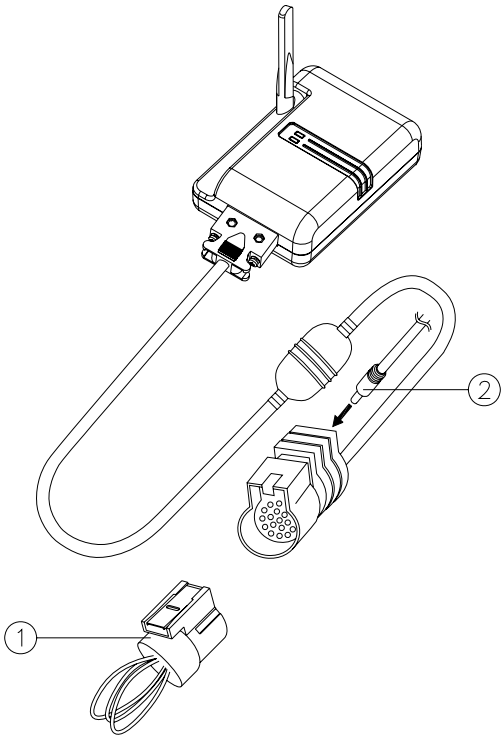

① Self-Test Adaptor ② AC/DC Power Adaptor DC Jack

[Picture 4.16 Self-Test Adaptor Connection]

① Connect the main cable and the Self-Test adaptor to the wireless module.

② Connect the AC/DC power adaptor DC Jack to supply power.

4.8.2 RF TEST Screen

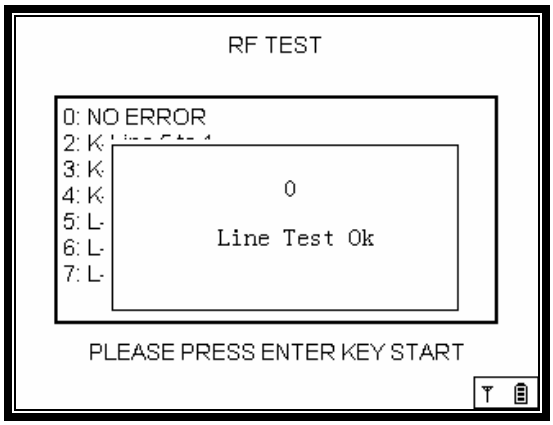

Picture 4.8 [TEST Screen]

RF Test checks the status of communication between the main body and the wireless module, whether the wireless module has any defect or not. (Checking the communication circuit of the wireless module)

① Press Enter key (↵) to start the TEST.

② If any defect is detected, the relevant error message will be displayed.

③ To return to the previous item, select the ESC key.

4.9 UPDATE

Select the Update icon on the SYSTEM MENU.

Update is used when Car-Doctor adds a new car or upgrades applications. It is also used in updating the firmware of the wireless module.

For further details, see the provided manual.

4.10 Tool Information

Select the System Info icon on the SYSTEM MENU.

It is same with **section 2.7 on Tool Info.**

III. APPENDIX

1. Types of Car Adaptors (Diagnostic Connector).....
2. PC Program (Dr. Sync) Operating Manual.....

1. Types of Car Adaptors (Diagnostic Connectors)

SHAPE	FUNCTION	PART NO.
OBD-II 16 Pin Adaptor	Enables diagnosis of vehicles by connecting to the diagnostic connector of OBD-II vehicle.	CB-96-0063
Daewoo 12 Pin Adaptor	Enables diagnosis of vehicles by connecting to the 16 pin diagnostic connector of the general vehicles.	CB-96-0061
Ssangyong 20 Pin Adaptor	Enables diagnosis of vehicles by connecting to the 20 pin diagnostic connector of Musso and Korando vehicles produced after 1998.	015-M1001-C
Ssangyong 14 Pin Adaptor	Enables diagnosis of vehicles by connecting to the 14 pin diagnostic connector of general vehicle types.	015-M1002-C
Kia 20 Pin Adaptor	Enables diagnosis of vehicles by connecting to the 20 pin diagnostic connector of the general vehicle types.	CB-96-0064
Kia 6 Pin Adaptor	Enables diagnosis of vehicles by connecting to the 6 pin diagnostic connector of old vehicle models.	CB-96-0066

Samsung Adaptor (14 Pin)	Enables diagnosis of vehicles by connecting to the 14 pin diagnostic connector of general vehicle types.	CB-97-0046
Hyundai Adaptor (12 Pin)	Enables diagnosis of vehicles by connecting to the 12 pin diagnostic connector of general vehicle types.	CB-96-0065
Ssangyong OBD-II 16 Pin	Enables diagnosis of vehicles by connecting to the 16 pin diagnostic connector of general vehicle types.	CB-96-0063S
Toyota R 17P	Enables diagnosis of vehicles by connecting to the square 17 pin diagnostic connector.	068-M1004
Proton OBD-II 16P	Enables diagnosis of vehicles by connecting to the 16 pin diagnostic connector of general vehicle types.	CB-96-0063P
Honda 3P	Enables diagnosis of vehicles by connecting to the 3 pin diagnostic connector of general vehicle types	068-M1002

Honda 3P	Enables diagnosis of vehicles by connecting to the 3 pin diagnostic connector of general vehicle types	068-M1002
BMW 20P	Enables diagnosis of vehicles by connecting to the 3 pin diagnostic connector of general vehicle types	068-M1003
Benz 3P	Enables diagnosis of vehicles by connecting to the 3 pin diagnostic connector of general vehicle types	068-M1005
Benz 38P	Enables diagnosis of vehicles by connecting to the 38 pin diagnostic connector of general vehicle types	068-E0004

※ Car adaptors may differ from the products described above depending on the package you purchased.

CAR-DOCTOR
Operating Manual

1st Edition published in February 2006

Author: JASTEC CO., LTD.
Publisher: JASTEC CO., LTD.
Editing / Printing: JASTEC CO., LTD.

Registration No.:
Registration Date: February 2006
92-7, Geumgok-dong, Bundang,
Seongnam-si, Gyeonggi-do, South Korea
TEL: +82 31 719 5170, 2747 (DIRECT)
FAX: +82 31 719 5177

All rights reserved. No part of this book may be reproduced or transmitted in any form without written permission from the publisher.