Installation guide AELEMENT
Euro Lock Selflocking

AELEMENT by SALTO

SALTO inspiredaccess

AE i **1** xxx... series
(With electronic privacy)

Eng Installation guide
E Guía de instalación
F Guide d'installation
D Installationsanleitung
I Guida all'installazione

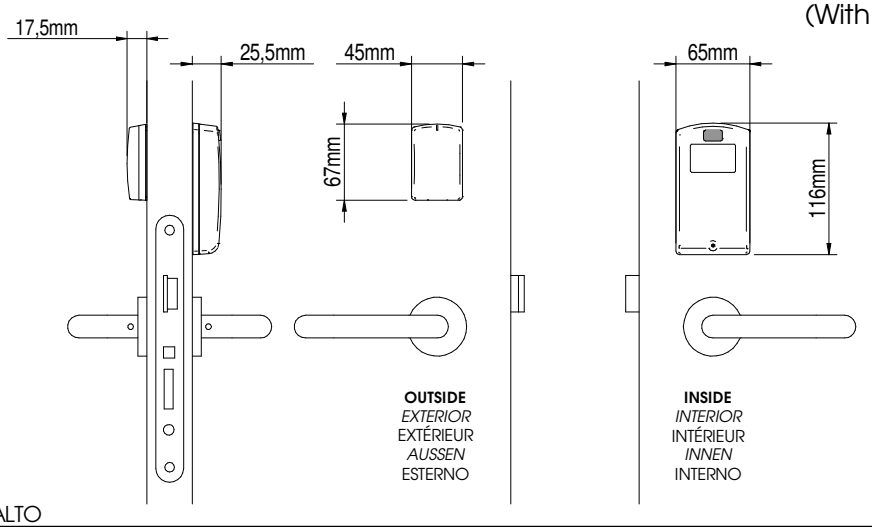

Only SALTO spindle
Solo cuadradillos SALTO
Seulement carrés SALTO
Nur SALTO-Vierkant
Solo quadro maniglia SALTO

* **Only for doors > 65mm (2-9/16") thickness.**
* *Solo para puertas > 65mm de espesor.*
* Uniquement pour portes > 65 mm d'épaisseur.
* *Nur für Türblattstärken > 65 mm.*
* Solo per portes > 65 mm di spessore.

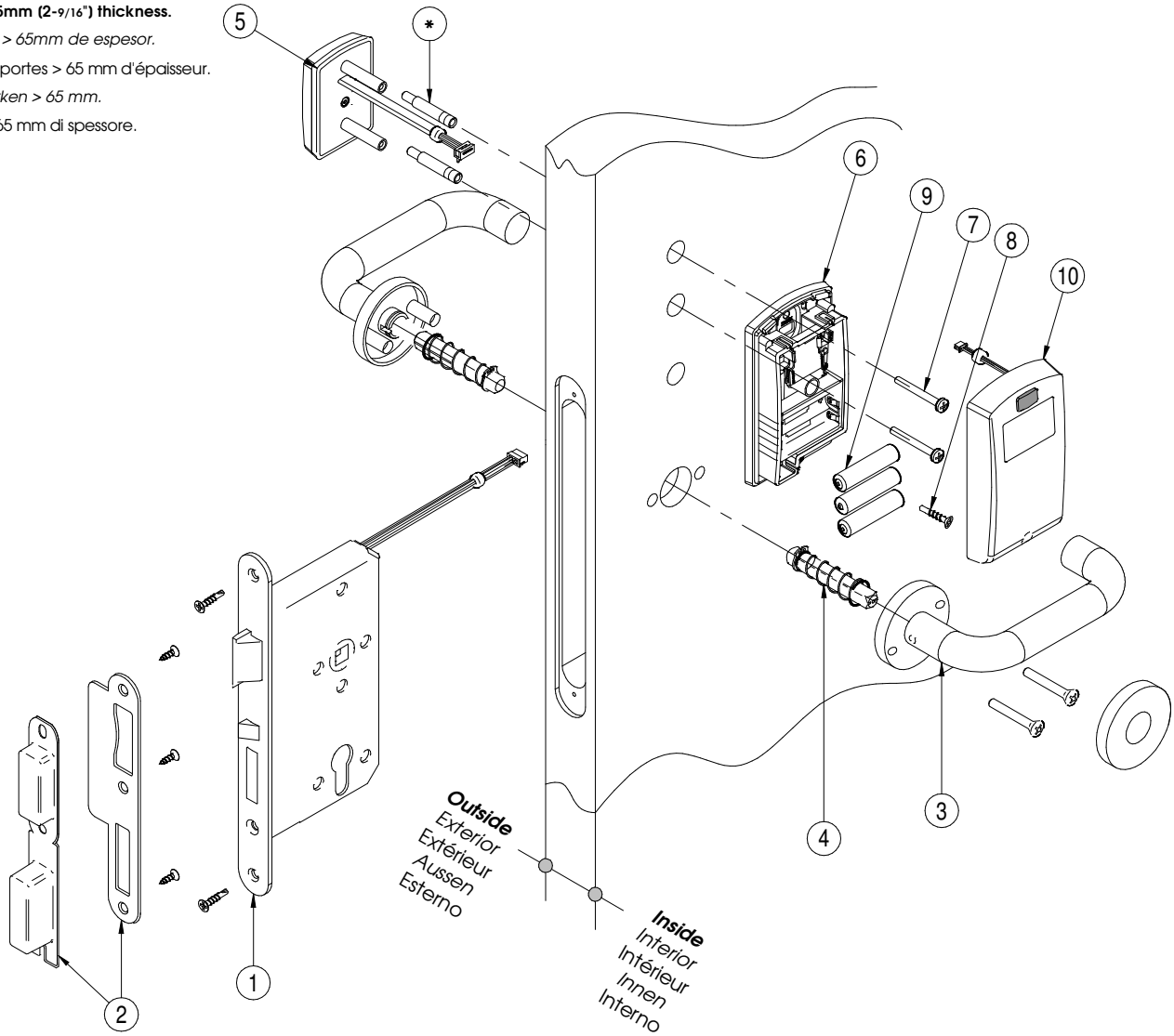

The mounting with other spindles voids the guaranty.
El montaje de otros cuadradillos anula la garantia.
Le montage d'autres carrés annulera le garantie.
Keine Garantie bei Verwendung anderer Drückervierkante.
Il montaggio con un altro quadro maniglia annulla la garanzia.

NOTE: Screws and spindles are included in the box of the reader.
NOTA:Los tornillos y cuadradillos estan incluidos en la caja del lector.
NOTE: Les vis et les carrés sont inclus dans la boite du lecteur.
Anm. :Schrauben und Drückervierkant Sind in Karton des Lesers enthalten
NOTA : Viti e quadro maniglia sono inclusi nella confezione del lettore.

Recommendation for Customer's lever set installation on SALTO AElement.
See : 4MO01299
Recomendaciones para la instalación de manillas Cliente en SALTO AElement.
Ver: 4MO01299
Recommandation pour l'installation des béquilles Client sur Salto AElement.
Voir: 4MO01299
Empfehlung zur Installation von kundenspezifischem Drückernset auf SALTO-Aelement.
Sehen: 4MO01299
Raccomandazioni per l'installazione delle maniglie fornite dal cliente nel sistema Salto Aelement.
Vedere: 4MO01299

© 2016 SALTO Systems S.L.

All contents current at time of publication.
SALTO Systems S.L. reserves the right to change availability of any item in this catalog, its design, construction, and/or materials.

Installation guide AELEMENT
Euro Lock Selflocking

AELEMENT by SALTO

SALTO inspiredaccess

1

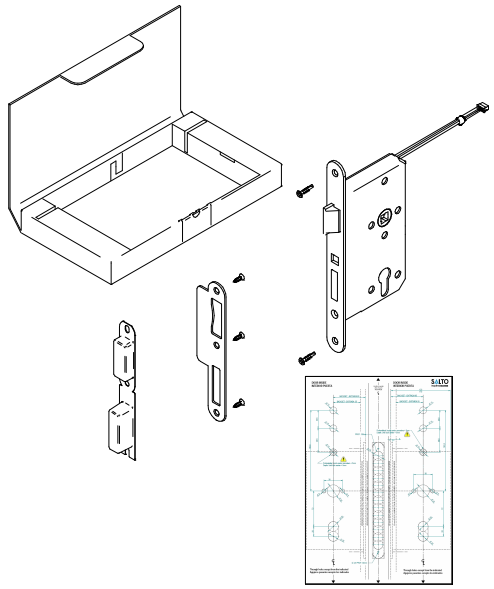

2

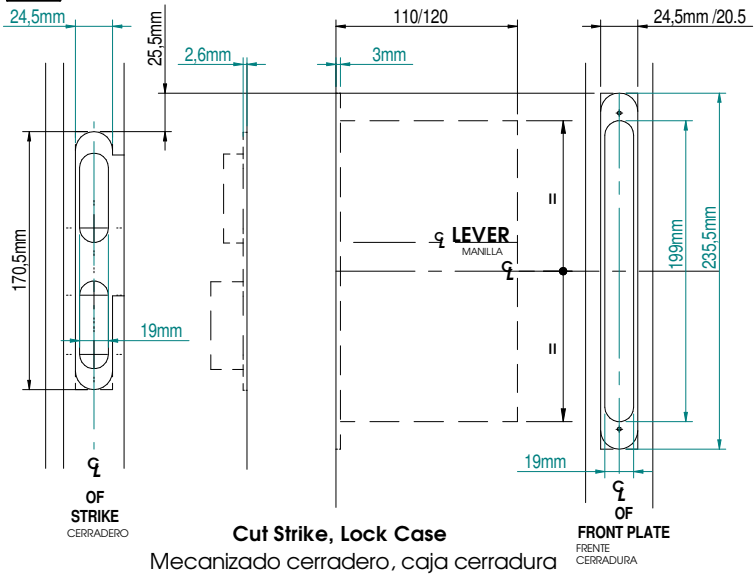

Cut Strike, Lock Case
Mecanizado cerradero, caja cerradura

3

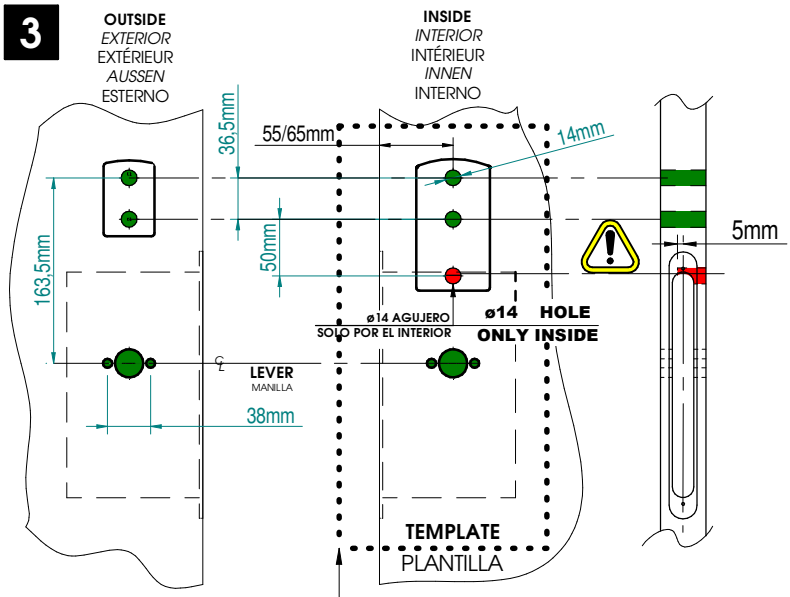

(Eng) **FOR DRILLING MARKS USE TEMPLATE ONLY BY INSIDE.**

(E) *PARA MARCAR LOS AGUJEROS USAR LA PLANTILLA SOLO POR EL INTERIOR.*

(F) POUR MARQUER LES JOINTS DE PERÇAGE, N'UTILISER LE GABARIT QUE DU CÔTÉ INTERIEUR.

(D) *ZUR MARKIERUNG DER BIHRLOCHUNGEN SCHABLONE NUR AN DER INNENSEITE VERWENDEN.*

(I) PER SEGNARE LA FORATURA UTILIZZARE LA DIMA DALLA PARTE INTERNA.

4

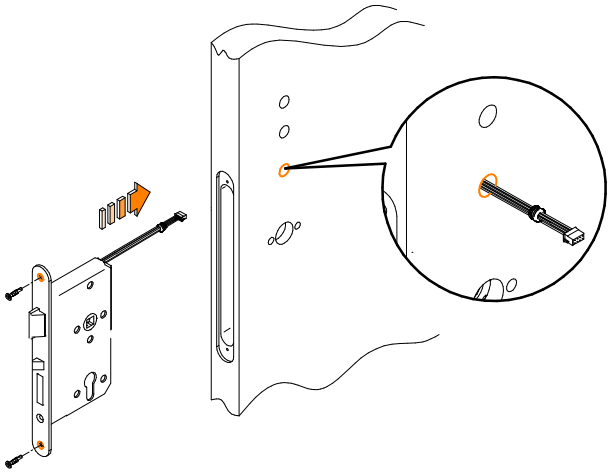

5

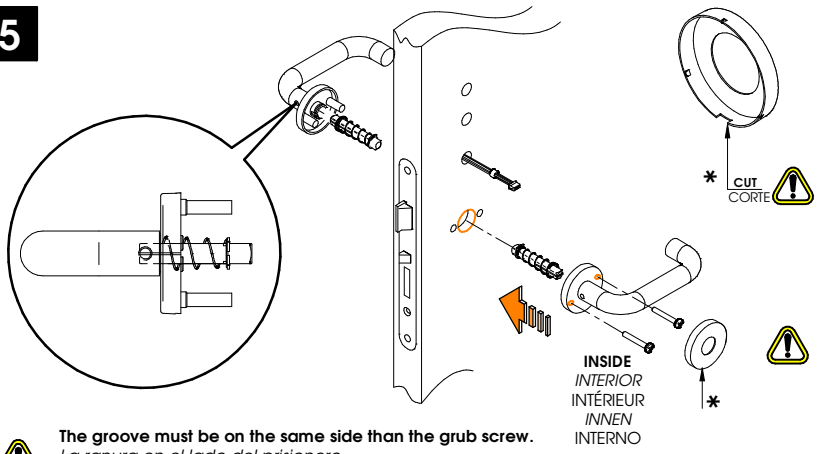

The groove must be on the same side than the grub screw.
La ranura en el lado del prisionero.
La rainure doit être du côté de la vis.
Nut muss an gleicher Seite wie Fixierungsschraube sein.

6

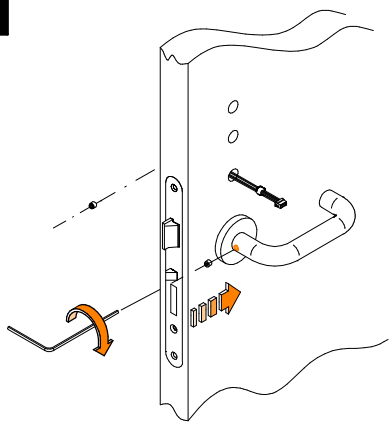

© 2016 SALTO Systems S.L.

All contents current at time of publication.
SALTO Systems S.L. reserves the right to change availability of any item in this catalog, its design, construction, and/or materials.

Installation guide AELEMENT
Euro Lock Selflocking

ELEMENT by SALTO

SALTO inspiredaccess

7

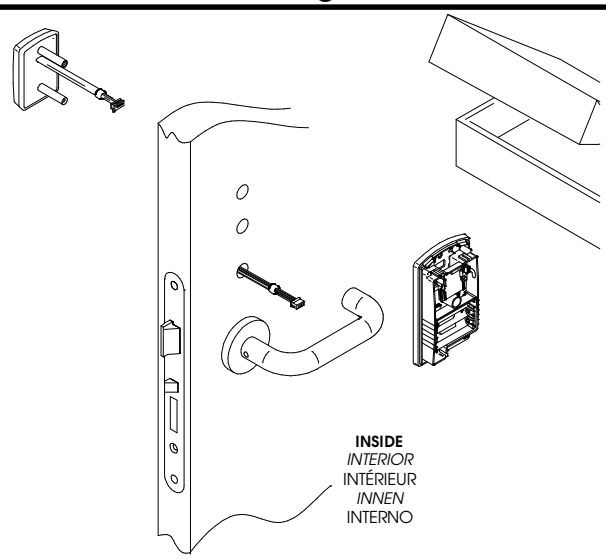

8

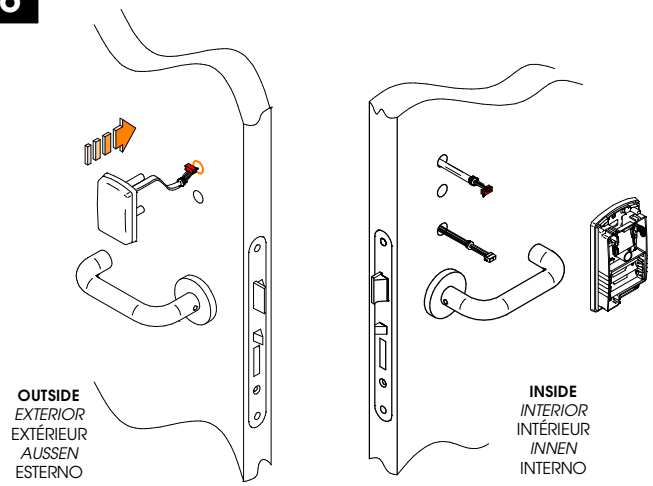

9

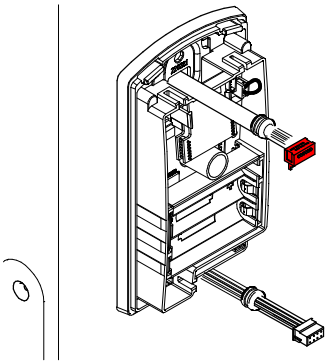

10

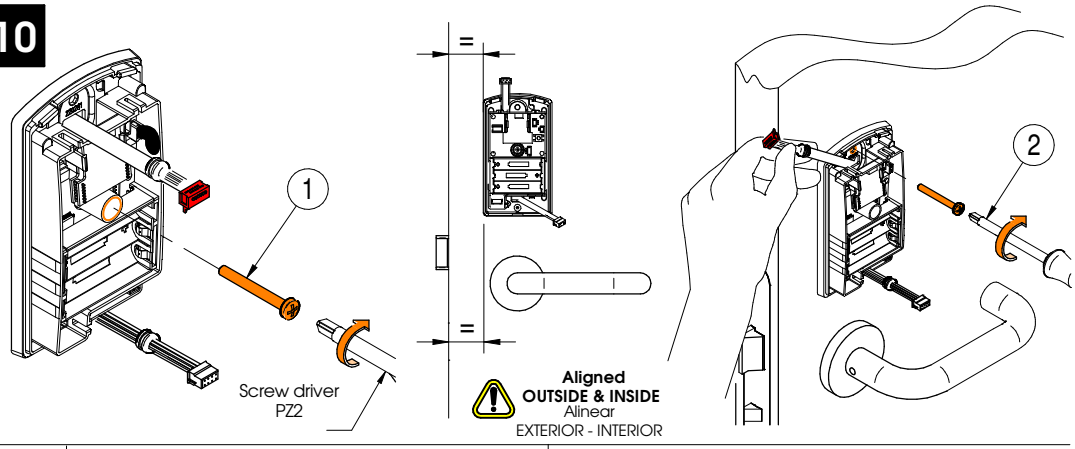

11

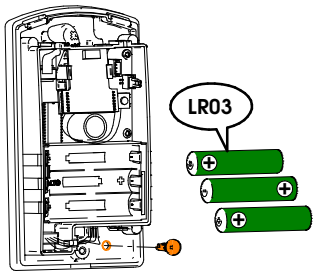

Fasten with screw to keep it aligned.
Fijar el tornillo para mantener el alineamiento.
Fixer la vis pour assurer l'alignement.
Schraube fixieren,um Ausrichtung beizubehalten.
Fissare la vite per tenerla alineata.

12

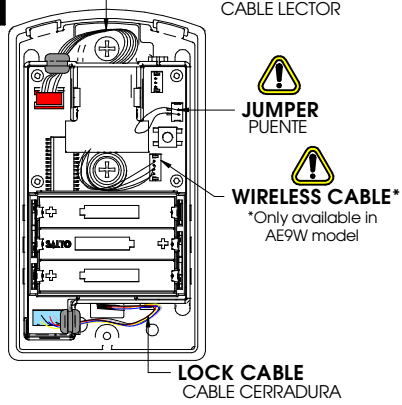

13

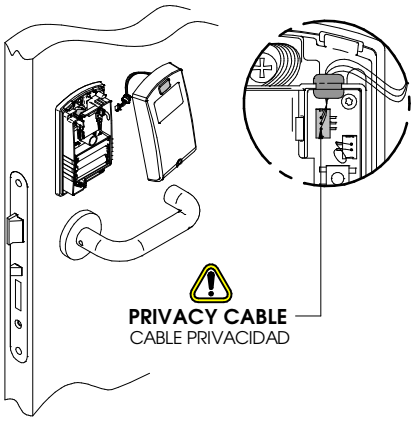

Eng	AT THIS POINT DO NOT CLOSE THE DOOR PROGRAM THE LOCK FIRST
E	NO CIERRE LA PUERTA. PROGRAMAR ANTES LA CERRADURA
D	TÜRE NICHT SCHLIESSEN. ZUERST SCHLOSS PROGRAMMIEREN
F	NE PAS FERMEZ LA PORTE DE PROGRAMMER LA SERRURE
I	PRIMA DI CHIUDERE LA PORTA, PROGRAMMARE LA SERRATURA

Follow user manual

14

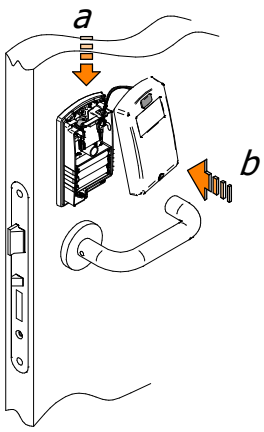

15

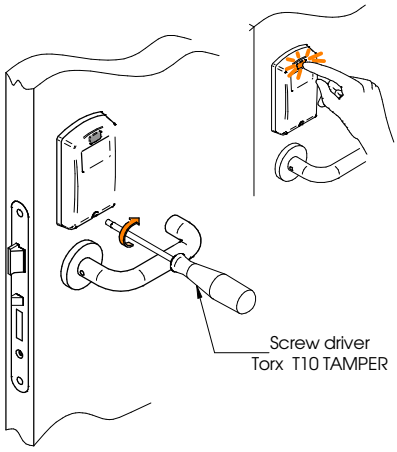

© 2016 SALTO Systems S.L.

All contents current at time of publication.
SALTO Systems S.L. reserves the right to change availability of any item in this catalog, its design, construction, and/or materials.

Installation guide AELEMENT
Euro Lock Selflocking

AELEMENT by SALTO

SALTO inspiredaccess

AE i **0** xxx... series
(**NO** electronic privacy)

Eng Installation guide
E Guía de instalación
F Guide d'installation
D Installationsanleitung
I Guida all'installazione

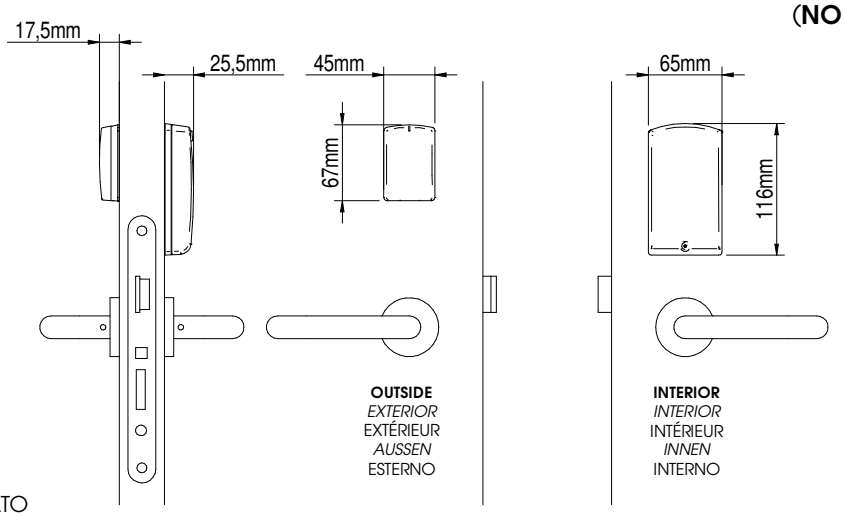

Only SALTO spindle
Solo cuadradillos SALTO
Seulement carrés SALTO
Nur SALTO-Vierkant
Solo quadro maniglia SALTO

* **Only for doors > 65mm (2-9/16") thickness.**
* *Solo para puertas > 65mm de espesor.*
* Uniquement pour portes > 65 mm d'épaisseur.
* *Nur für Türblattstärken > 65 mm.*
* Solo per portes > 65 mm di spessore.

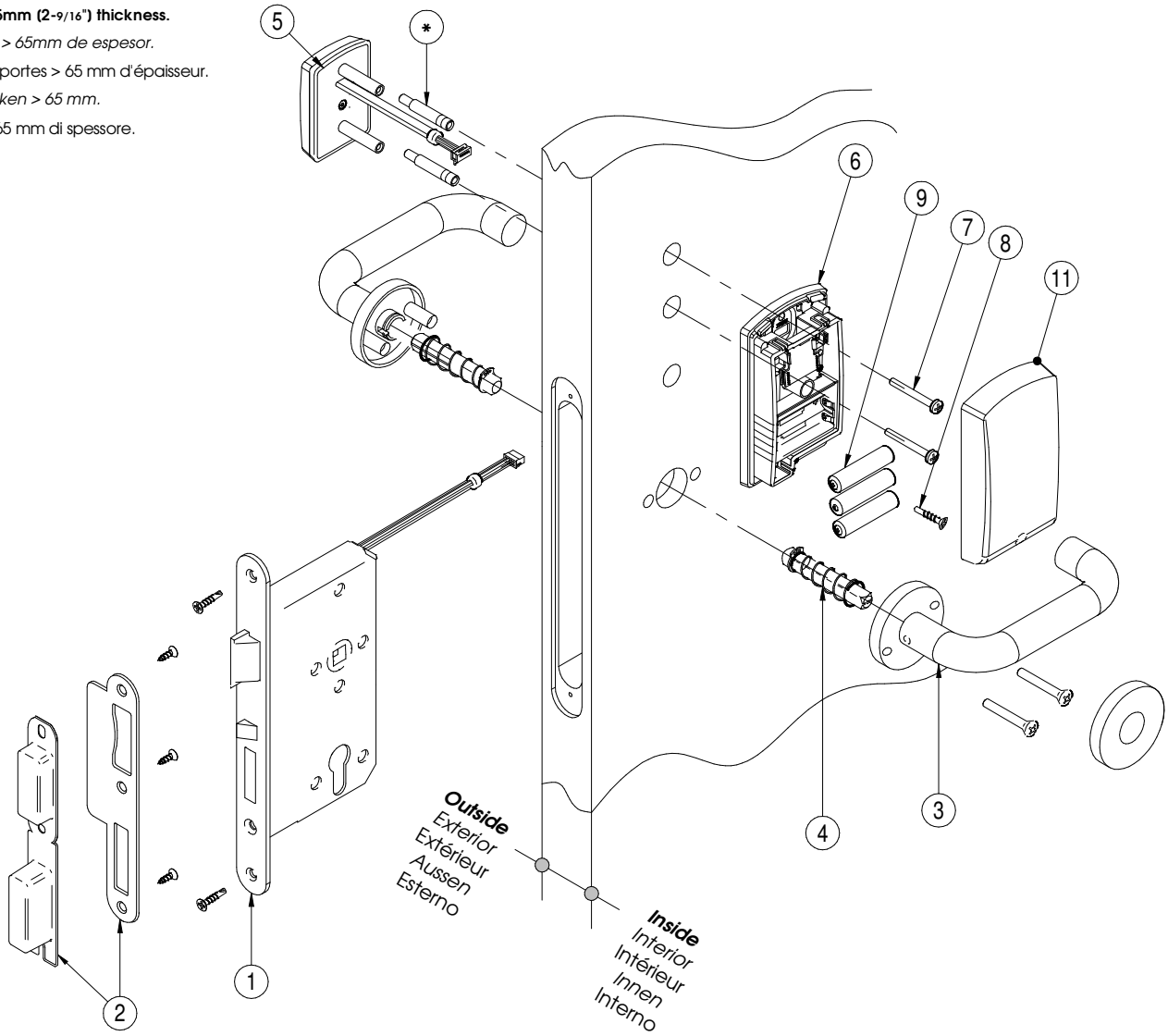

The mounting with other spindles voids the guaranty.
El montaje de otros cuadradillos anula la garantia.
Le montage d'autres carrés annulera le garantie.
Keine Garantie bei Verwendung anderer Drückervierkante.
Il montaggio con un altro quadro maniglia annulla la garanzia.

NOTE: Screws and spindles are included in the box of the reader.
NOTA:Los tornillos y cuadradillos estan incluidos en la caja del lector.
NOTE: Les vis et les carrés sont inclus dans la boite du lecteur.
Anm. :Schrauben und Drückervierkant Sind in Karton des Lesers enthalten
NOTA : Viti e quadro maniglia sono inclusi nella confezione del lettore.

© 2016 SALTO Systems S.L.

www.saltosystems.com

All contents current at time of publication.
SALTO Systems S.L. reserves the right to change availability of any item in this catalog, its design, construction, and/or materials.

Compliance

PRODUCTS DESCRIPTION

PRODUCT		TECHNOLOGY			SOFTWARE					
COMMERCIAL NAME	MODEL	RFID 13.56MHz Output max. power	BLUETOOTH LE 2400–2483.5 MHz Output max. power	IEEE802.15.4 2400–2483.5 MHz Output max. power	CONTROL CIRCUIT	MOTOR CIRCUIT	Bluetooth LE MODULE	RF2 MODULE	SoC	
									FUS	Bluetooth LE Stack
Ælement Fusion E1723	AF0B	+24 dBm	+8 dBm		0141		0136			
	AF0J	+24 dBm	+8 dBm		0145		0136			
	AF0M	+24 dBm	+8 dBm		0177		0184			
	AF0D	+24 dBm	+8 dBm, +2.8 dBm		0146		0136, --			
Ælement Original E1009	AE9	+20 dBm			0106					
	AE9W	+20 dBm		+5 dBm	0106/0062			0038		
	AEB	+20 dBm	+8 dBm		0135		0136			
	AEJ	+20 dBm	+8 dBm		0147		0136			
	AE0M	+20 dBm	+8 dBm		0178		0184			
	AES	+20 dBm	+2.8 dBm		0139		--			
XS4 One E1722	E97	+23 dBm			0128	0000				
	EB7	+23 dBm	+8 dBm		0134	0000	0136			
	EM07	+22 dBm	+6 dBm		0196	0000			0186	0187
	EM17	+22 dBm	+6 dBm		0196	0000			0186	0187
	EJ7	+23 dBm	+8 dBm		0150	0000	0136			
XS4 mini ANSI E1721	CB2	+23 dBm	+8 dBm		0175	0000	0184			
	C20M	+23 dBm	+6 dBm		0196	0000			0186	0187
	CJ2	+23 dBm	+8 dBm		0150	0000	0136			
SALTO DBolt E2133	DM0M	+22 dBm	+6 dBm		0190	0179			0186	0187
	DZ0M	+22 dBm	+6 dBm		0190	0209			0186	0187
PPD A0101	PPD800	--			0109					

EU DECLARATION OF CONFORMITY

EN Hereby, SALTO Systems S.L. (Arkotz Kalea (Pol. Lanbarren), 9 – 20180 Oiartzun– Spain), declares that this access control equipment is in compliance with the essential requirements and other relevant provisions of Directive 2014/53/EU (RED) and 2011/65/EU (RoHS). You will be able to find a copy of the original declaration of conformity at the following Internet address: **https://www.saltosystems.com/certificate**

ES Por medio de la presente SALTO Systems S.L. (Arkotz Kalea (Pol. Lanbarren), 9 – 20180 Oiartzun– Spain) declara que este equipo de control de accesos cumple con los requisitos esenciales y cualesquiera otras disposiciones aplicables o exigibles de la Directiva 2014/53/UE (RED) y 2011/65/UE (RoHS). Podrá encontrar una copia de la declaración de conformidad original en la siguiente dirección de internet: **https://www.saltosystems.com/certificate**

FR Par la présente SALTO Systems S.L. (Arkotz Kalea (Pol. Lanbarren), 9 – 20180 Oiartzun– Spain) déclare que l'appareil équipement pour le contrôle d'accès est conforme aux exigences essentielles et aux autres dispositions pertinentes de la directive 2014/53/UE (RED) et 2011/65/UE (RoHS). Vous pouvez télécharger une copie de la déclaration de conformité originale à travers l'adresse suivante: **https://www.saltosystems.com/certificate**

DE Hiermit erklärt SALTO Systems S.L. (Arkotz Kalea (Pol. Lanbarren), 9-20180 Oiartzun-Spain) dass sich das Gerät Zutrittskontrollgeräte im Übereinstimmung mit den grundlegendenAnforderungen und den übrigen einschlägigen Bestimmungen derRichtlinie 2014/53/EU (RED) befindet und 2011/65/EU (RoHS). Eine Kopie der originalen Konformitätserklärung finden Sie auf der folgenden Internetseite: **https://www.saltosystems.com/certificate**

NL Hierbij verklaart SALTO Systems S.L. (Arkotz Kalea (Pol. Lanbarren), 9 – 20180 Oiartzun– Spain) dat het toestel toegangscontroleapparatuur in overeenstemming is met de essentiële eisen en de andere relevante bepalingen van richtlijn 2014/53/EU (RED) en 2011/65/EU (RoHS). U kunt een kopie van de originele verklaring van overeenstemming vinden op het volgende internetadres: **https://www.saltosystems.com/certificate**

PT A SALTO Systems S.L. declara que este equipamento de controlo de acessos está conforme os requisitos essenciais e outras disposições da Diretiva 2014/53/UE (RED) e 2011/65/EU (RoHS). Poderá encontrar uma cópia da declaração de conformidade original na seguinte direção de internet: **https://www.saltosystems.com/certificate**

UKCA DECLARATION OF CONFORMITY

Hereby, SALTO Systems S.L. (Arkotz Kalea (Pol. Lanbarren), 9 – 20180 Oiartzun– Spain), declares that this access control equipment is in compliance with the essential requirements and other relevant provisions of The Radio Equipment Regulations 2017 and RoHS Regulation 2012. You will be able to find a copy of the original declaration of conformity at the following Internet address: **https://www.saltosystems.com/certificate**

UK importer contact information:
Salto Systems, Ltd. Unit 1, The Court Holywell Business Park, Northfield Road, CV47 0FS Southam, UK.

ELECTRICAL WARNINGS

EN **Caution:**

- **Risk of explosion if battery is replaced by an incorrect type. Dispose of used batteries according to the instructions.**
- **Disposal of a battery into fire or a hot oven, or mechanically crushing or cutting of a battery, can result in an explosion.**
- **Leaving a battery in an extremely high temperature surrounding environment can result in an explosion or the leakage of flammable liquid or gas.**
- **A battery subjected to extremely low air pressure may result in an explosion or the leakage of flammable liquid or gas.**

Distance between this device and human body must be higher than 20 cm.

All contents current at time of publication. SALTO Systems S.L. reserves the right to change availability of any item in this catalog, its design, construction, and/or materials.

Compliance

FR **Attention:**

- **Risque d'explosion si la pile est remplacée par un type de pile inadéquat. Jetez les piles usagées conformément aux instructions.**
- **La destruction d'une pile par le feu ou dans un four à haute température, le broyage ou encore son découpage mécanique peut entraîner une explosion.**
- **Laisser une pile dans un environnement où la température est extrêmement élevée peut entraîner une explosion, une fuite de liquide ou de gaz inflamable.**
- **Une pile soumise à une pression d'air extrêmement faible peut entraîner une explosion, ou la fuite d'un liquide ou d'un gaz inflammable.**

La distance entre cet appareil et le corps humain doit être supérieure à 20 cm.

Recommended batteries:

- Duracell Plus Power **(AAA) LR03** MN2400
- Duracell Ultra Power **(AAA) LR03** MX2400
- Varta Industrial **(AAA) LR03** 04003
- Varta High Energy **(AAA) LR03** 04903
- Varta Max Tech **(AAA) LR03** MN2400
- Duracell Ultra Power **(AAA) LR03** MX1500
- Duracell Plus Power **(AA) LR6** MN1500
- Varta Industrial **(AA) LR6** 04006
- Varta High Energy **(AA) LR6** 04906
- Varta Max Tech **(AA) LR6** MN1500

MECHANICAL WARNINGS

In order to confirm the correct operation of this electronic device, SALTO recommends using it in combination with a lock destined for that use (door mass, frequency of use, fire door, etc.) and that is in good operational conditions. Polished finishes are strongly recommended in seaside environments for a better performance and durability. The environmental conditions mentioned in the data sheets are always referred to non-condensation situations. The Biocote and IA finishes are painted and sharp objects such as rings or metallic key rings or other metallic objects should be avoided during any cleaning process. The SALTO product should be treated with care during the installation process to avoid any aggressive contact that may damage the unit. It may be necessary to loosen the trims mounting during installation. Do not bring the device into contact with oil, paints or acids. Do not paint the door with the mortise lock or electronic device already mounted on the door. CLEANING THE ELECTRONIC DEVICE: a damp cloth with mild soapy water can be used**.** **Never use abrasive soaps or sprays**. The black chromium finish ("NE" code) is coated with a protective oil that improves the product conservation. Its presence may increase the appearance of fingerprint traces after the needed product handling. Thus, no cleaning processes are applied at the origin to avoid removing the protective layer. SALTO recommends cleaning the product surfaces with a damp cloth after its manipulation when the installation is finished. For best performance, stainless steel should be cleaned regularly. Note that when the door is closed without the lock having been already programmed, the lock will automatically lock and can only be opened with a Portable Programing Device (PPD). If you have questions or doubts on this, please contact your authorized SALTO supplier.

LEGAL WARNINGS

The user shall be responsible for the correct use and maintenance of the access control equipment according to the instructions herein. SALTO shall not be responsible for any defect, malfunction, loss or damage, whether direct or indirect, caused by or arisen from any improper installation or utilization of the equipment or which contravenes, transgresses or infringes in any manner the above mentioned instructions. SALTO's liability concerning the equipment is limited to the warranty provided. The warranty does not cover product failures due to repairs, modifications or product manipulations performed in the access control equipment or in the inner electromechanical structure by anyone other than authorized SALTO dealers or personnel.

FCC COMPLIANCE STATEMENT

This device complies with Part 15 of the FCC Rules. Operation is subject to the following two conditions: (1) this device may not cause harmful interference, and (2) this device must accept any interference received, including interference that may cause undesired operation. Changes or modifications not expressly approved by the party responsible for compliance could void the user's authority to operate the equipment.
Note: This equipment has been tested and found to comply with the limits for a Class B digital device, pursuant to part 15 of the FCC Rules. These limits are designed to provide reasonable protection against harmful interference in a residential installation. This equipment generates, uses, and can radiate radio frequency energy and, if not installed and used in accordance with the instructions may cause harmful interference to radio communications. However, there is no guarantee that interference will not occur in a particular installation. If this equipment does cause harmful interference to radio or television reception, which can be determined by turning the equipment off and on, the user is encouraged to try to correct the interference by one or more of the following measures:

• Reorient or relocate the receiving antenna.
• Increase the separation between the equipment and receiver.
• Connect the equipment into an outlet on a circuit different from that to which the receiver is connected.
• Consult the dealer or an experienced radio/TV technician for help.

This product is a radio transmitter and receiver to be used in **mobile** conditions.

Supplier's Declaration of Conformity
47 CFR § 2.1077 Compliance Information

We, SALTO Systems, S.L., hereby declare that the equipment bearing the model number specified above was tested conforming to the applicable FCC Rules.

Responsible Party – U.S. Contact Information
Salto Systems Inc. USA. 1780 Corporate Drive, Suite 400. Norcross, GA. 30093. n.buffington@saltosystems.com

ISED COMPLIANCE STATEMENT

This device complies with Industry Canada license-exempt RSS standards(s). Operation is subject to the following two conditions: (1) this device may not cause harmful interference, and (2) this device must accept any interference received, including interference that may cause undesired operation. Changes or modifications not expressly approved by the party responsible for compliance could void the user's authority to operate the equipment.
Le présent appareil est conforme aux CNR d'Industrie Canada applicables aux appareils radio exempts de licence. L'exploitation est autorisée aux deux conditions suivantes: (1) l'appareil ne doit pas produire de brouillage, et (2) l'utilisateur de l'appareil doit accepter tout brouillage radioélectrique subi, même si le brouillage est susceptible d'en compromettre le fonctionnement.
This device has been tested and found to comply with the limits for a Class B digital device, pursuant to ICES-003.

IMDA COMPLIANCE LABEL [1]

Complies with IMDA Standards DA108623

All contents current at time of publication. SALTO Systems S.L. reserves the right to change availability of any item in this catalog, its design, construction, and/or materials.

NCC WARNING STATEMENT / NCC 警語要求 [2]

取得審驗證明之低功率射頻器材，非經核准，公司、商號或使用者均不得擅自變更頻率、加大功率或變更原設計之特性及功能。低功率射頻器材之使用不得影響飛航安全及干擾合法通信；經發現有干擾現象時，應立即停用，並改善至無干擾時方得繼續使用。前述合法通信，指依電信管理法規定作業之無線電通信。低功率射頻器材須忍受合法通信或工業、科學及醫療用電波輻射性電機設備之干擾。

Legend:	Remarks:
[1] IMDA	Not applicable for models, AE9, AE9W, E97, PPD800
[2] NCC	Not applicable for models AF0M, AF0D, AE9, AE9W, AE0M, AES, E97, EM07, EM17, C20M, DM0M, DZ0M, PPD800

All contents current at time of publication. SALTO Systems S.L. reserves the right to change availability of any item in this catalog, its design, construction, and/or materials.