Installation guide
Panel reader

SALTO inspiredaccess

Eng **Installation guide**
D *Installationsanleitung*
E Guía de instalación
F *Guide d'installation*

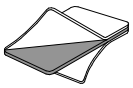
PANEL READER FIXING STICKER

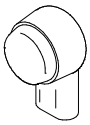
3M™ SCOTCHLOK™ BUTT CONNECTOR UY2 (X4)

COVER STICKER

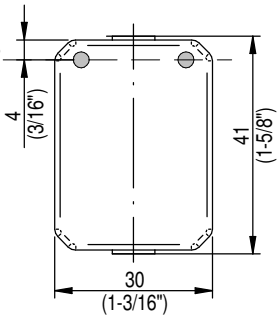

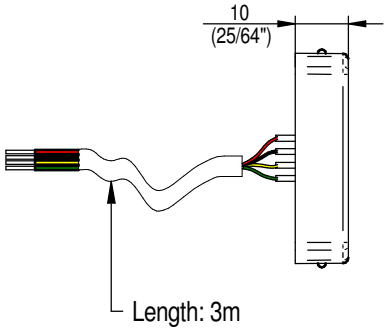

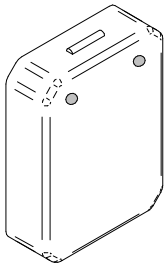

Eng Installation D *Installation* E *Instalación* F *Installation*

1

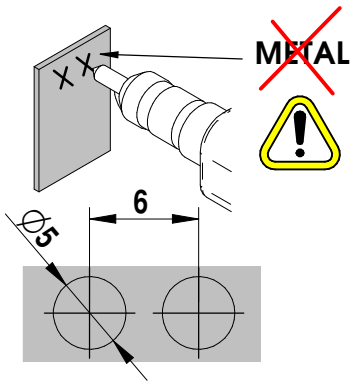

2-a

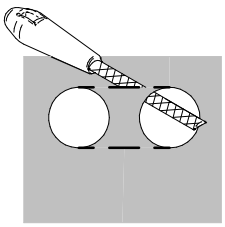

2-b

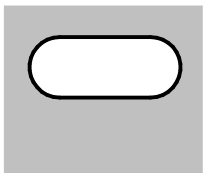

3

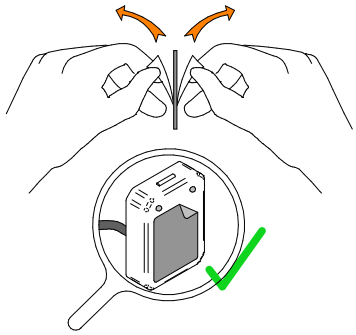

4

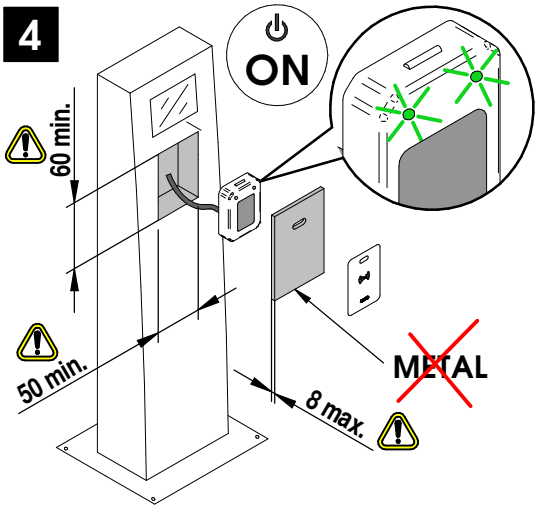

5

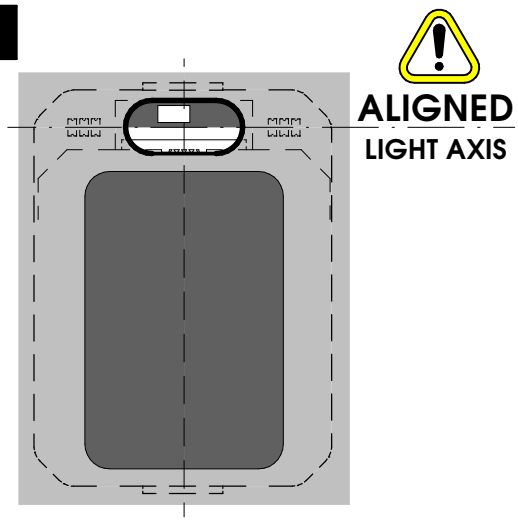

6

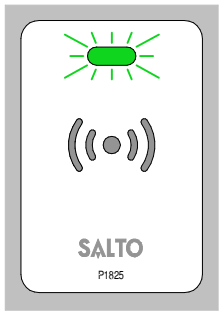

Eng Application D Anwendung E Aplicación F Application

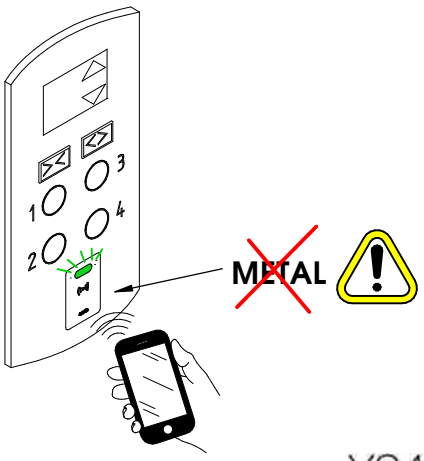

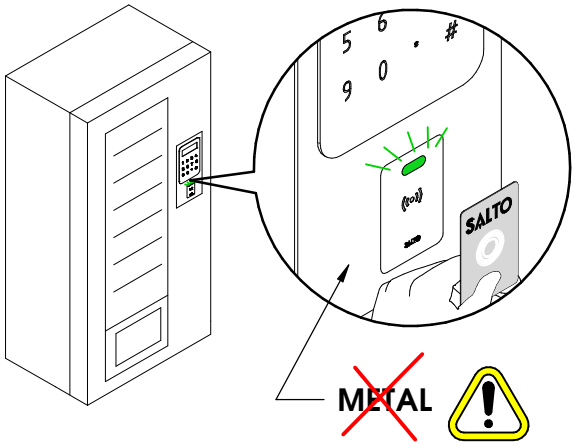

European view

All contents current at time of publication.
SALTO Systems S.L. reserves the right to change availability of any item in this catalog, its design, construction, and/or materials.

© 2018 SALTO Systems S.L.

Eng Electrical characteristics:

Operation conditions

	Min	Max	Unit
Temperature	-22/-30	158/70	ºF/ºC
Humidity	35	85	%

RF characteristics

	Min	Cen.	
RFID frequency		13.56	Mhz
Bluetooth Smart frequency	2.4	2.445	Ghz

Cable type and max. distances

Cable type	Reader
UTP Cat5e 2 pairs AWG24	279ft 85m
UTP Cat5e 4 pairs AWG24 + SP224861/SP224895	853ft 260m Note2
Twisted pairs AWG18	1312ft 400m

Power Consumption Note1

	Min	Max	Unit
Reader		150	mA

Note 1: Installer must take this data into account to dimension the CU42xx power supply.
Note 2: Not use with Scotchlock butt connector UY2.
SALTO recommends to use on cable per wall reader.

D Elektronische Eigenschaften:

Umgebungsbedingungen

	Min	Max	Einheit
Temperatur	-22/-30	158/70	ºF/ºC
Feuchtigkeit	35	85	%

RF Frequenzen

	Min	Cen.	Einheit
RFID frequenz		13.56	Mhz
Bluetooth Smart frequenz	2.4	2.445	Ghz

Verkabelung und max. entfernungen

Kabeltyp	Leser
UTP Cat5e 2 pairs AWG24	279ft 85m
UTP Cat5e 4 pairs AWG24 + SP224861/SP224895	853ft 260m Note2
Twisted pairs AWG18	1312ft 400m

Stromaufnahme Note1

	Min	Max	Einheit
Reader		150	mA

Note1: Bitte beachten Sie die Stromaufnahme bei der Planung des Netzteils für die CU42xx.
Note2: Nicht verwenden mit den Scotchlok Einzeladerverbinder UY2.
SALTO empfiehlt die Verwendung einer separaten Leitung je Wandleser.

E Características eléctricas:

Condiciones ambientales

	Min	Max	Unidad
Temperatura	-22/-30	158/70	ºF/ºC
Humedad	35	85	%

RF characteristics

	Min	Cen.	Unidad
Frecuencia RFID		13.56	Mhz
Frecuencia Bluetooth Smart	2.4	2.445	Ghz

Tipo de cable y distancias max.

Cable type	Lector
UTP Cat5e 2 pairs AWG24	279ft 85m
UTP Cat5e 4 pairs AWG24 + SP224861/SP224895	853ft 260m Note2
Twisted pairs AWG18	1312ft 400m

Consumo Nota1

	Min	Max	Unidad
Lector		150	mA

Nota1:El instalador ha de tener en cuenta la dimensión del alimentador de la CU42xx.
Nota2:No usar el conector Scotchlook butt UY2 con este tipo de cable.
SALTO recomienda utilizar un cable por cada lector mural.

F Caractéristique électronique:

Condition de fonctionnement

	Min	Max	Unit
Température	-22/-30	158/70	ºF/ºC
Humidité	35	85	%

RF characteristics

	Min	Cen.	
Fréquence RFID		13.56	Mhz
Fréquence Bluetooth Smart	2.4	2.445	Ghz

Type de câble

Type de câble	Lecteur
UTP Cat5e 2 pairs AWG24	279ft 85m
UTP Cat5e 4 pairs AWG24 + SP224861/SP224895	853ft 260m Note2
Twisted pairs AWG18	1312ft 400m

Consommation Note1

	Min	Max	Unité
Reader		150	mA

Note1:L'installateur doit calculer l'alimentation nécessaire pour alimentere la CU42xx.
Note2: Ne pas utiliser le connecteur Scotchlok UY2 avec ce type de câble.
SALTO recommande d'utiliser un câble pour chaque lecteur mural.

All contents current at time of publication.
SALTO Systems S.L. reserves the right to change availability of any item in this catalog, its design, construction, and/or materials.

© 2018 SALTO Systems S.L.

Installation guide
Panel reader

SALTO inspiredaccess

Eng Installation example D Installationsbeispiel E Ejemplo de instalación F Exemple d'installation

Eng Only connect ti CU42xx
D *Nur für Steuereinheit CU42xx*
E Solo conectar a CU42xx
F *Connecter uniquement CU42xx*

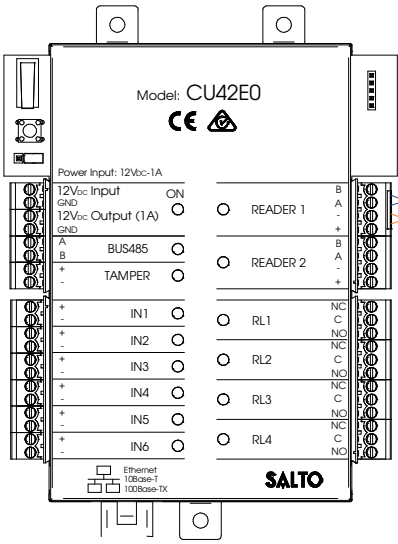

Eng *Same pair*
D *Gleiches Paar*
E Mismo par
F *Même paire*

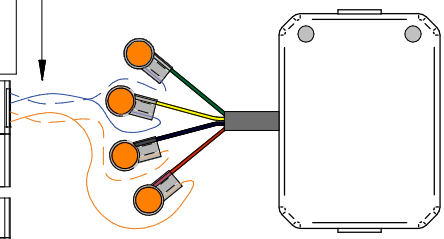

Eng Only connect to CU42xx
D *Nur für Steuereinheit CU42xx*
E Solo conectar a CU42xx
F *Connecter uniquement CU42xx*

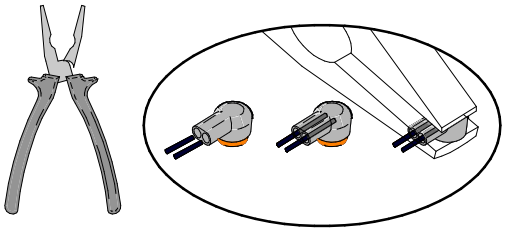

	Eng	D	E	F
B	Green	Grün	Verde	Vert
A	Yellow	Gelb	Amarillo	Jaune
⏚	Black	Schwarz	Negro	Noir
+V	Red	Rot	Rojo	Rouge

Eng 3M™ Scotchlok™ butt connector UY2. Crimp with cap side down.
D *3M™ Scotchlok™ butt Einzeladerverbinder UY2. Mit der Kappe nach unten zusammendrücken.*
E Conector 3M™ Scotchlok™ butt UY2. Crimpar con la tapa hacia abajo.
F *Connecteur 3M™ Scotchlok™ butt UY2. Crêper avec le capuchon vers le bas.*

Eng Installation example with RJ45 D Installationsbeispiel für RJ45 E Ejemplo de instalación RJ45 F Exemple d'installation avec RJ45

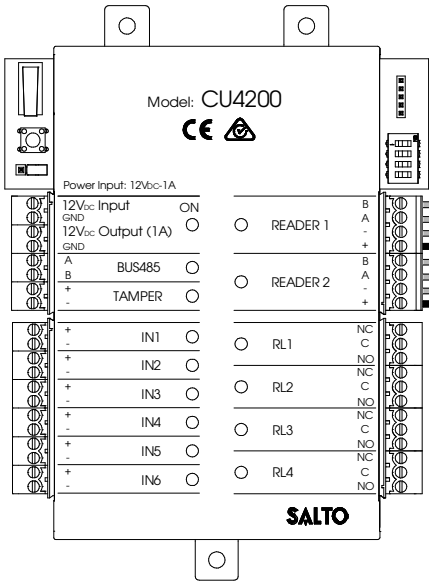

Eng *Optional*
D *Optioneel*
E Opcional
F Optionnelle
SP224861

Eng *Optional*
D *Optioneel*
E Opcional
F Optionnelle
SP224895

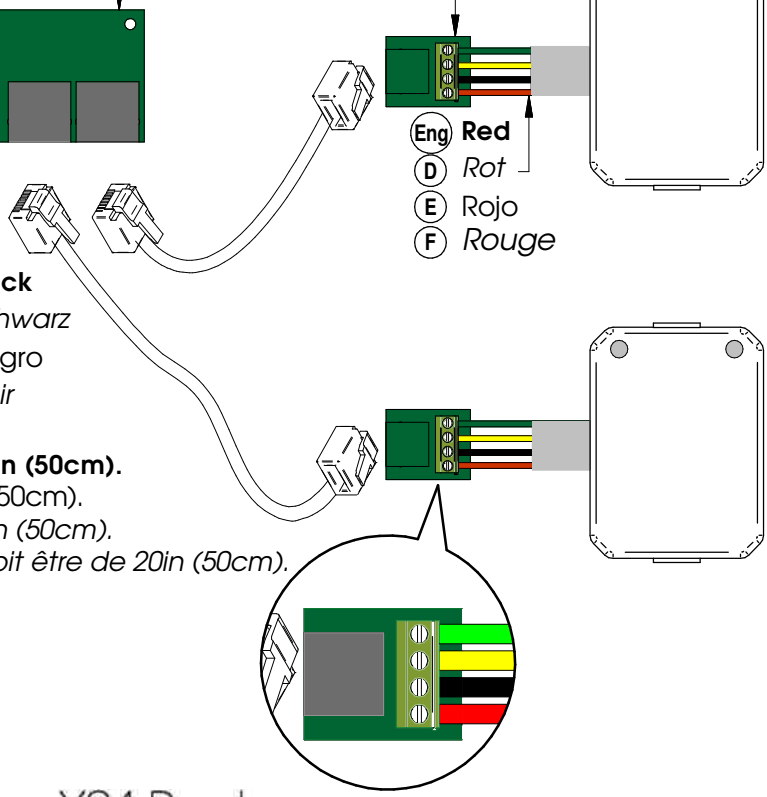

Eng Red
D *Rot*
E Rojo
F *Rouge*

Eng Black
D *Schwarz*
E Negro
F *Noir*

Eng Minimum distance between readers 20in (50cm).
D Mindestabstand zwischen Lesern 20in (50cm).
E *Distancia mínima entre los lectores 20in (50cm).*
F *Distance minimale entre les lecteurs doit être de 20in (50cm).*

European view

All contents current at time of publication.
SALTO Systems S.L. reserves the right to change availability of any item in this catalog, its design, construction, and/or materials.

© 2018 SALTO Systems S.L.

Installation guide
Mullion reader

SALTO inspiredaccess

(Eng) **Installation guide**
(D) *Installationsanleitung*
(E) *Guía de instalación*
(F) Guide d'installation

TORX 20 (x2)
SELF-DRILLING SCREW

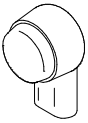
3M™ SCOTCHLOK™ BUTT
CONNECTOR UY2 (X4)

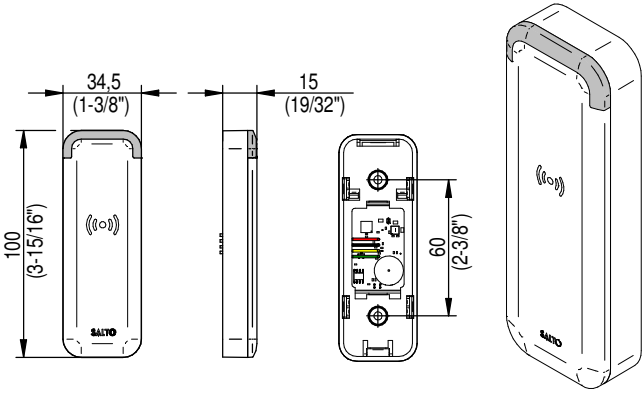

(Eng) Installation (D) Installation (E) *Instalación* (F) Installation

1

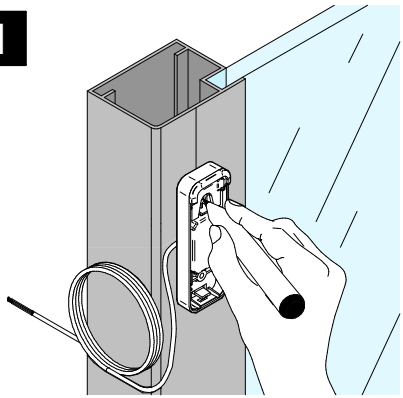

2

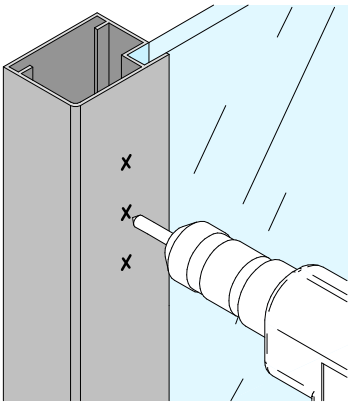

3

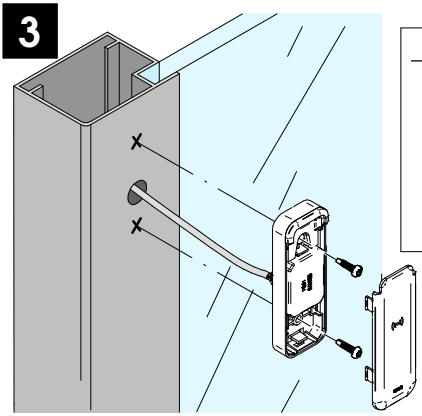

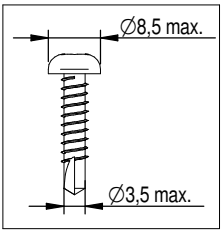

4

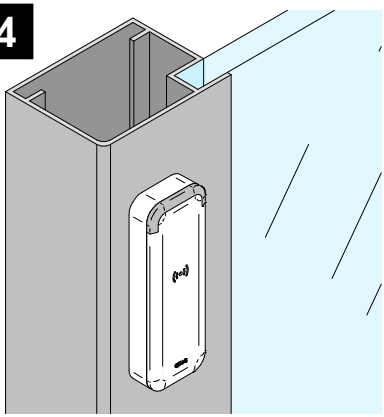

European view

All contents current at time of publication.
SALTO Systems S.L. reserves the right to change availability of any item in this catalog, its design, construction, and/or materials.

225647-ED.- 12/02/2018

© 2018 SALTO Systems S.L.

Installation guide
Mullion reader

SALTO inspiredaccess

(Eng) Electrical characteristics:

Operation conditions

	Min	Max	Unit
Temperature	-22/-30	158/70	ºF/ºC
Humidity	35	85	%

RF characteristics

	Min	Cen.	
RFID frequency		13.56	Mhz
Bluetooth Smart frequency	2.4	2.445	Ghz

Cable type and max. distances

Cable type	Reader
UTP Cat5e 2 pairs AWG24	213ft 65m
UTP Cat5e 4 pairs AWG24 + SP224861/SP224895	656ft 200m Nota2
Pares trenzados AWG18	984ft 300m

Power Consumption Note1

	Min	Max	Unit
Reader		195	mA

Note 1: Installer must take this data into account to dimension the CU42xx power supply.
Note 2: Not use with Scotchlock butt connector UY2.
SALTO recommends to use on cable per wall reader.

(D) Elektronische Eigenschaften:

Umgebungsbedingungen

	Min	Max	Einheit
Temperatur	-22/-30	158/70	ºF/ºC
Feuchtigkeit	35	85	%

RF Frequenzen

	Min	Cen.	Einheit
RFID frequenz		13.56	Mhz
Bluetooth Smart frequenz	2.4	2.445	Ghz

Verkabelung und max. entfernungen

Kabeltyp	Leser
UTP Cat5e 2 pairs AWG24	213ft 65m
UTP Cat5e 4 pairs AWG24 + SP224861/SP224895	656ft 200m Nota2
Pares trenzados AWG18	984ft 300m

Stromaufnahme Note1

	Min	Max	Einheit
Reader		195	mA

Note1: Bitte beachten Sie die Stromaufnahme bei der Planung des Netzteils für die CU42xx.
Note2: Nicht verwenden mit den Scotchlok Einzeladerverbinder UY2.
SALTO empfiehlt die Verwendung einer separaten Leitung je Wandleser.

(E) Características eléctricas:

Condiciones ambientales

	Min	Max	Unidad
Temperatura	-22/-30	158/70	ºF/ºC
Humedad	35	85	%

RF characteristics

	Min	Cen.	Unidad
Frecuencia RFID		13.56	Mhz
Frecuencia Bluetooth Smart	2.4	2.445	Ghz

Tipo de cable y distancias max.

Cable type	Lector
UTP Cat5e 2 pairs AWG24	213ft 65m
UTP Cat5e 4 pairs AWG24 + SP224861/SP224895	656ft 200m Nota2
Pares trenzados AWG18	984ft 300m

Consumo Nota1

	Min	Max	Unidad
Lector		195	mA

Nota1:El instalador ha de tener en cuenta la dimensión del alimentador de la CU42xx.
Nota2:No usar el conector Scotchlook butt UY2 con este tipo de cable.
SALTO recomienda utilizar un cable por cada lector mural.

(F) Caractéristique électronique:

Condition de fonctionnement

	Min	Max	Unit
Température	-22/-30	158/70	ºF/ºC
Humidité	35	85	%

RF characteristics

	Min	Cen.	
Fréquence RFID		13.56	Mhz
Fréquence Bluetooth Smart	2.4	2.445	Ghz

Type de câble

Type de câble	Lecteur
UTP Cat5e 2 pairs AWG24	213ft 65m
UTP Cat5e 4 pairs AWG24 + SP224861/SP224895	656ft 200m Nota2
Pares trenzados AWG18	984ft 300m

Consommation Note1

	Min	Max	Unité
Reader		195	mA

Note1:L'installateur doit calculer l'alimentation nécessaire pour alimentere la CU42xx.
Note2: Ne pas utiliser le connecteur Scotchlok UY2 avec ce type de câble.
SALTO recommande d'utiliser un câble pour chaque lecteur mural.

All contents current at time of publication.
SALTO Systems S.L. reserves the right to change availability of any item in this catalog, its design, construction, and/or materials.

© 2018 SALTO Systems S.L.

Installation guide
Mullion reader

SALTO inspiredaccess

(Eng) Installation example (D) Installationsbeispiel (E) Ejemplo de instalación (F) Exemple d'installation

(Eng) **Only connect ti CU42xx**
(D) *Nur für Steuereinheit CU42xx*
(E) Solo conectar a CU42xx
(F) *Connecter uniquement CU42xx*

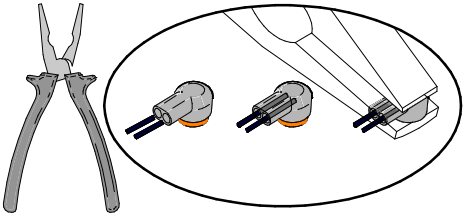

(Eng) **3M™ Scotchlok™ butt connector UY2. Crimp with cap side down.**
(D) *3M™ Scotchlok™ butt Einzeladerverbinder UY2. Mit der Kappe nach unten zusammendrücken.*
(E) Conector 3M™ Scotchlok™ butt UY2. Crimpar con la tapa hacia abajo.
(F) *Connecteur 3M™ Scotchlok™ butt UY2. Crêper avec le capuchon vers le bas.*

	(Eng)	(D)	(E)	(F)
B	Green	Grün	Verde	Vert
A	Yellow	Gelb	Amarillo	Jaune
⏚	Black	Schwarz	Negro	Noir
+V	Red	Rot	Rojo	Rouge

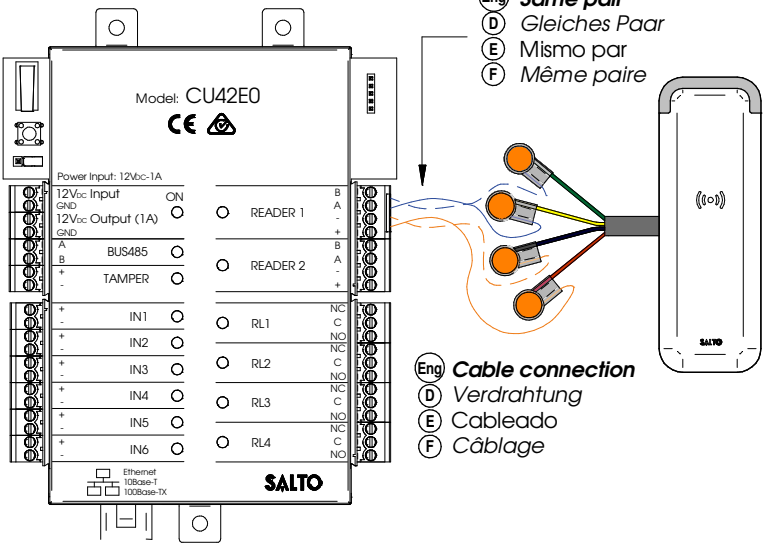

European view

All contents current at time of publication.
SALTO Systems S.L. reserves the right to change availability of any item in this catalog, its design, construction, and/or materials.

225647-ED.- 12/02/2018

© 2018 SALTO Systems S.L.

Installation guide
Mullion reader

SALTO inspiredaccess

(Eng) Installation example with RJ45 (D) Installationsbeispiel für RJ45 (E) Ejemplo de instalación RJ45 (F) Exemple d'installation avec RJ45

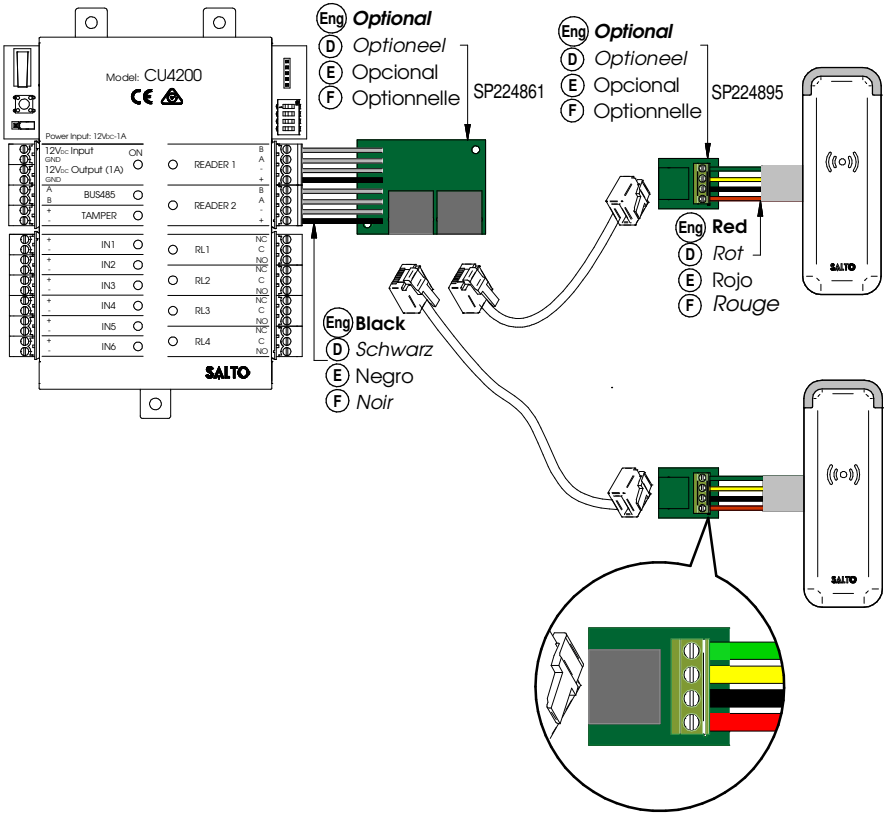

(Eng) Minimum distance between readers 20in (50cm).
(D) Mindestabstand zwischen Lesern 20in (50cm).
(E) *Distancia mínima entre los lectores 20in (50cm).*
(F) *Distance minimale entre les lecteurs doit être de 20in (50cm).*

All contents current at time of publication.
SALTO Systems S.L. reserves the right to change availability of any item in this catalog, its design, construction, and/or materials.

225647-ED.- 12/02/2018

© 2018 SALTO Systems S.L.

Compliance

SALTO inspiredaccess

PRODUCTS DESCRIPTION

PRODUCT		TECHNOLOGY		SOFTWARE	
COMMERCIAL NAME	MODEL	RFID	BLUETOOTH SMART	CONTROL	BLUETOOTH MODULE(S)
XS4 Wall Reader 2.0 Panel P1825	WRDP0B	x	x	0152	0136
	WRDP0J	x	x	0153	0136
XS4 Wall Reader 2.0 Mullion P1826	WRDM0B	x	x	0152	0136
	WRDM0J	x	x	0153	0136

EU COMPLIANCE STATEMENT

EN Hereby, SALTO Systems S.L. (Arkotz Kalea (Pol. Lanbarren), 9 – 20180 Oiartzun– Spain), declares that this access control equipment is in compliance with the essential requirements and other relevant provisions of Directive 2014/53/EU (RED) and 2011/65/EU (RoHS). You will be able to find a copy of the original declaration of conformity at the following Internet address: **http://www.saltosystems.com/certificate**

ES Por medio de la presente SALTO Systems S.L. (Arkotz Kalea (Pol. Lanbarren), 9 – 20180 Oiartzun– Spain) declara que este equipo de control de accesos cumple con los requisitos esenciales y cualesquiera otras disposiciones aplicables o exigibles de la Directiva 2014/53/UE (RED) y 2011/65/UE (RoHS). Podrá encontrar una copia de la declaración de conformidad original en la siguiente dirección de internet: **http://www.saltosystems.com/certificate**

FR Par la présente SALTO Systems S.L. (Arkotz Kalea (Pol. Lanbarren), 9 – 20180 Oiartzun– Spain) déclare que l'appareil équipement pour le contrôle d'accès est conforme aux exigences essentielles et aux autres dispositions pertinentes de la directive 2014/53/UE (RED) et 2011/65/UE (RoHS). Vous pouvez télécharger une copie de la déclaration de conformité originale à travers l'adresse suivante: **http://www.saltosystems.com/certificate**

DE Hiermit erklärt SALTO Systems S.L. (Arkotz Kalea (Pol. Lanbarren), 9-20180 Oiartzun-Spain) dass sich das Gerät Zutrittskontrollgeräte im Übereinstimmung mit den grundlegendenAnforderungen und den übrigen einschlägigen Bestimmungen derRichtlinie 2014/53/EU (RED) befindet und 2011/65/EU (RoHS). Eine Kopie der originalen Konformitätserklärung finden Sie auf der folgenden Internetseite: **http://www.saltosystems.com/certificate**

NL Hierbij verklaart SALTO Systems S.L. (Arkotz Kalea (Pol. Lanbarren), 9 – 20180 Oiartzun– Spain) dat het toestel toegangscontroleapparatuur in overeenstemming is met de essentiële eisen en de andere relevante bepalingen van richtlijn 2014/53/EU (RED) en 2011/65/EU (RoHS). U kunt een kopie van de originele verklaring van overeenstemming vinden op het volgende internetadres: **http://www.saltosystems.com/certificate**

PT A SALTO Systems S.L. declara que este equipamento de controlo de acessos está conforme os requisitos essenciais e outras disposições da Diretiva 2014/53/UE (RED) e 2011/65/EU (RoHS). Poderá encontrar uma cópia da declaração de conformidade original na seguinte direção de internet: **http://www.saltosystems.com/certificate**

ELECTRICAL WARNINGS

Distance between this device and human body must be higher than 20 cm.

FRECUENCY / OUTPUT MAXIMUM POWER

TECHNOLOGY	OPERATING FRECUENCY	OUTPUT MAX. POWER
RFID	13.56 MHz	+25 dBm
Bluetooth Smart	2400 – 2483.5 MHz	+8 dBm / + 2.8 dBm

MECHANICAL WARNINGS

In order to confirm the correct operation of this electronic device, SALTO recommends using it in combination with a lock destined for that use (door mass, frequency of use, fire door, etc) and that is in good operational conditions. The SALTO product should be treated with care during the installation process to avoid any aggressive contact that may damage the unit. It may be necessary to loosen the trims mounting during installation. Do not bring the device into contact with oil, paints or acids. Do not paint the door with the mortise lock or electronic device already mounted on the door. CLEANING THE ELECTRONIC DEVICE: a damp cloth with mild soapy water can be used. Never use abrasive soaps or sprays. For best performance, stainless steel should be cleaned regularly. Note that when the door is closed without the lock having been already programmed, the lock will automatically lock and can only be opened with a Portable Programing Device (PPD). If you have questions or doubts on this, please contact your authorized SALTO supplier.

All contents current at time of publication. SALTO Systems S.L. reserves the right to change availability of any item in this catalog, its design, construction, and/or materials.

LEGAL WARNINGS

The user shall be responsible for the correct use and maintenance of the access control equipment according to the instructions herein. SALTO shall not be responsible for any defect, malfunction, loss or damage, whether direct or indirect, caused by or arisen from any improper installation or utilization of the equipment or which contravenes, transgresses or infringes in any manner the abovementioned instructions.

SALTO's liability concerning the equipment is limited to the warranty provided. The warranty does not cover product failures due to repairs, modifications or product manipulations performed in the access control equipment or in the inner electromechanical structure by anyone other than authorized SALTO dealers or personnel.

FCC COMPLIANCE STATEMENT

This device complies with Part 15 of the FCC Rules. Operation is subject to the following two conditions: (1) this device may not cause harmful interference, and (2) this device must accept any interference received, including interference that may cause undesired operation. Changes or modifications not expressly approved by the party responsible for compliance could void the user's authority to operate the equipment.
Note: This equipment has been tested and found to comply with the limits for a Class B digital device, pursuant to part 15 of the FCC Rules. These limits are designed to provide reasonable protection against harmful interference in a residential installation. This equipment generates, uses, and can radiate radio frequency energy and, if not installed and used in accordance with the instructions may cause harmful interference to radio communications. However, there is no guarantee that interference will not occur in a particular installation. If this equipment does cause harmful interference to radio or television reception, which can be determined by turning the equipment off and on, the user is encouraged to try to correct the interference by one or more of the following measures:

- Reorient or relocate the receiving antenna.
- Increase the separation between the equipment and receiver.
- Connect the equipment into an outlet on a circuit different from that to which the receiver is connected.
- Consult the dealer or an experienced radio/TV technician for help.

CANADIAN COMPLIANCE STATEMENT

This device complies with Industry Canada license-exempt RSS standard(s). Operation is subject to the following two conditions: (1) this device may not cause harmful interference, and (2) this device must accept any interference received, including interference that may cause undesired operation. Changes or modifications not expressly approved by the party responsible for compliance could void the user's authority to operate the equipment.
Le présent appareil est conforme aux CNR d'Industrie Canada applicables aux appareils radio exempts de licence. L'exploitation est autorisée aux deux conditions suivantes: (1) l'appareil ne doit pas produire de brouillage, et (2) l'utilisateur de l'appareil doit accepter tout brouillage radioélectrique subi, même si le brouillage est susceptible d'en compromettre le fonctionnement.
This device has been tested and found to comply with the limits for a Class B digital device, pursuant to ICES-003.

All contents current at time of publication. SALTO Systems S.L. reserves the right to change availability of any item in this catalog, its design, construction, and/or materials.