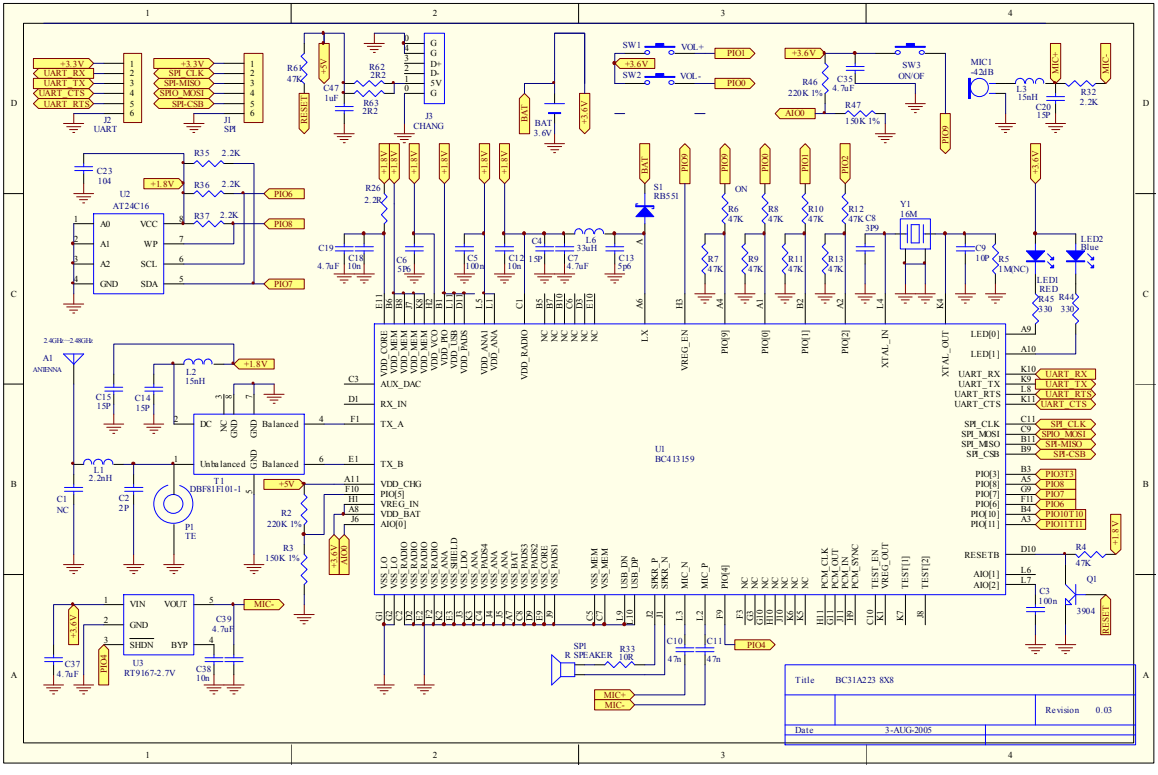

APPLICANT: SHENZHEN FULL-JOIN TECHNOLOGY CO., LTD.
FCC ID: UKF-FULLJOIN-003