EUROTECH
Imagine. Build. Succeed.

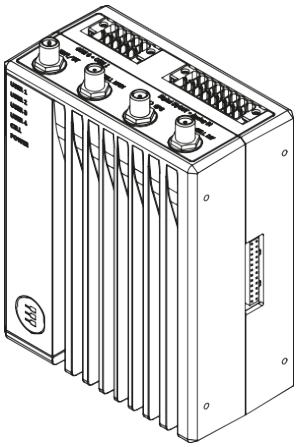

User manual

ReliaGATE 10-14

Multi-service IoT Edge Gateway - NXP i.MX8, LTE Cat 1

Rev. 1-3 — 7 February 2022 — Id: REGATE-10-14_Man_ENG_1-3 — ENGLISH

Trademarks

All trademarks, registered trademarks, logos, trade names, products names contained in this document are the property of their respective owners.

Intended audience of this document

This document is intended for system integrators: skilled persons with a thorough knowledge in linking together, physically or functionally, different computing systems and software applications to operate as a coordinated whole in compliance with the applicable regulations.

Revision history

Revision	Description	Date
1-0	First release	9 February 2021
1-1	Updated section 11.1 - "Default credentials"	17 February 2021
1-2	Updated section 11 - "How to access the Administration Console"	23 February 2021
1-3	Updated sections: - 6.2 - "Intended use and not allowed uses of the product" - 6.4 - "Optional accessories" - 6.5 - "Labels on the product" - 7.3 - "Antennas list" - 7.2.2 - “FCC compliance: Class B Digital Device” - 7.2.7 - “RF Radiation Exposure Statement” - 9.12 - "Case Intrusion" - 10.6 - "Partition layout" - 12.8 - "Wi-Fi Regulatory Domain" - 12.11 - "Timestamps and Tamper Detect" Inserted chapter 17- "How to decommission the product"	7 February 2022

© 2022 Eurotech SpA - Via Fratelli Solari 3/A - 33020 AMARO (UD) - Italy

HOW TO GET STARTED

To get started with the ReliaGATE 10-14, follow these steps:

1. **Read carefully and understand the instructions and warnings contained in this manual.**

   To lower the risk of personal injury, electric shock, fire, or damage to equipment, observe the instructions and warnings contained in this manual.
   For more information see: "Safety instructions" on page 9.

   Whenever in doubt regarding the correct understanding of this document, contact the Eurotech Technical Support.
   For more information see: "How to receive technical assistance" on page 17

2. **Know the ReliaGATE 10-14 and its interfaces.**

   For more information see:
   - "Product overview" on page 23
   - "Technical specifications" on page 25
   - "Interfaces overview" on page 37
   - "Interfaces in detail" on page 47

3. **Understand how to login the Administration Console and how to manage the interfaces in Linux.**

   For more information see:
   - "How to access the Administration Console" on page 61
   - "How to use the interfaces in Linux" on page 65

4. **Install the ReliaGATE 10-14.**

   For more information see:
   - "Mechanical specifications" on page 81
   - "How to install the product" on page 83

5. **Supply power to the ReliaGATE 10-14 respecting all safety instructions.**

   For more information see: "Power supply. How to turn ON/OFF and reset the product" on page 85

(This page has been intentionally left blank)

CONTENTS

Trademarks 2
Intended audience of this document 2
Revision history 2

How to get started 3

Contents 5

1 Safety instructions 9
1.1 Warning messages 9
1.1.1 Warning messages for harm to persons 9
1.1.2 Warning messages for damage to property 10
1.2 Warning: power supply safety 10
1.3 Caution: wireless safety 10
1.4 Caution: product's surfaces may become hot 11

2 Consignes de securite 13
2.1 Messages d'avertissement 13
2.1.1 Messages d'avertissement relatifs au dommage aux personnes 13
2.1.2 Messages d'avertissement relatifs aux dommages matériels 14
2.2 Avertissement: sécurité de l'alimentation électrique 14
2.3 Attention: sécurité sur la connectivité sans fil 14
2.4 Attention: les surfaces du produit peuvent devenir chaudes 15

3 How to receive technical assistance 17
3.1 How to ask for technical support 17
3.2 How to send a product for repair 17

4 Comment obtenir une assistance technique 19
4.1 Comment contacter le support technique 19
4.2 Comment retourner un produit en service après vente 19

5 Conventions used 21
5.1 Conventions for signal names 21
5.2 Conventions for signal types 21

6 Product overview 23
6.1 Product description 23
6.2 Intended use and not allowed uses of the product 24
6.2.1 Deterministic output notice 24
6.2.2 Intended use 24
6.2.3 Not allowed uses 24
6.3 Technical specifications 25
6.4 Optional accessories 26
6.5 Labels on the product 27

7 Regulatory information 29
7.1 CE marking 29
7.1.1 Safety 29
7.1.2 Packaging and packaging waste 29
7.1.3 Product disposal and recycling 29
7.1.4 WEEE compliance 29
7.1.5 RoHS 3 compliance 30
7.1.6 Directive RED 2014/53/EU 30
7.2 FCC/ISED compliance 32

7.2.1 FCC marking 32
7.2.2 FCC compliance: Class B Digital Device 32
7.2.3 FCC restrictions on 5 GHz Wi-Fi usage 33
7.2.4 ISED Canada compliance 34
7.2.5 ISED Class B Digital Device Notice 34
7.2.6 Responsible parties: Canadian Representative contact information 34
7.2.7 RF Radiation Exposure Statement 34
7.2.8 Labeling Information 35
7.3 Antennas list 35
7.4 REACH compliance 35

8 Interfaces overview 37
8.1 LED Indicators overview 37
8.2 Top Side Interfaces overview 38
8.3 Bottom Side Interfaces overview 39
8.4 Right Side Interfaces overview 40
8.5 Service Panel overview (Left Side) 41
8.5.1 Anti-Tamper Function 41
8.5.2 How to remove the Service Panel cover 42
8.5.3 Service Interfaces overview 43
8.5.4 MicroSD and MiniSIM card holders 45
8.6 Rear Side overview 46

9 Interfaces in detail 47
9.1 Wi-Fi and Bluetooth 47
9.1.1 Wi-Fi and Bluetooth specifications 47
9.1.2 Wi-Fi and Bluetooth antenna - Installation guidelines 47
9.1.3 Wi-Fi and Bluetooth antenna connector specifications 47
9.2 Internal Cellular Modem and GNSS (vers: -35, -36, -37) 48
9.2.1 Internal Cellular Modem specifications 48
9.2.2 Main cellular antenna requirements 48
9.2.3 Second cellular antenna requirements (for antenna diversity) 49
9.2.4 Cellular antennas - Installation guidelines 49
9.2.5 LTE - Single antenna operation notes 49
9.2.6 GNSS specifications 49
9.2.7 GNSS antenna - Installation guidelines 50
9.2.8 GNSS antenna requirements 50
9.2.9 Internal Cellular Modem and GNSS Antennas connectors specifications 50
9.3 Digital IN/OUT and Analog IN 51
9.3.1 Digital IN/OUT and Analog IN specifications 51
9.3.2 Digital IN/OUT and Analog IN connector specifications 51
9.4 COM0 and COM 1 52
9.4.1 COM0 and COM 1 connector specifications 52
9.5 DisplayPort 53
9.5.1 DisplayPort connector specifications 53
9.6 USB 0 and USB 1 54
9.6.1 USB 0 and USB 1 connectors specifications 54
9.7 ETH 0 and ETH 1 55
9.7.1 Ethernet specifications 55
9.7.2 ETH 0 and ETH 1 connectors specifications 55
9.8 Expansion 56
9.8.1 Expansion connector specifications 56
9.9 TTL Serial Console 57
9.9.1 TTL Serial Console connector specifications 57
9.10 Earth connection terminal 57
9.11 RTC (Real Time Clock) 58

9.11.1 The RTC Devices *58*
9.11.2 The RTC backup supercap *58*
9.12 Case Intrusion 58
9.13 TPM 58
9.14 Watchdog 58

10 The Software 59
10.1 The Linux OS Distribution 59
10.2 Ensure power supply during installation and update 59
10.3 Docker 59
10.4 Microsoft IoT Edge 59
10.5 System Firewall 60
10.6 Partition layout 60

11 How to access the Administration Console 61
11.1 Default credentials 61
11.2 How to change the password 61
11.3 Login Messages 62
11.4 How to login via the Serial Console 62
11.5 How to login via Secure Shell (SSH) 63
11.5.1 How to login via eth0 ..... *63*
11.5.2 How to login via eth1 ..... *63*

12 How to use the interfaces in Linux 65
12.1 General Purpose IO 65
12.2 How to use the GPIOs: the GPIO Utility 66
12.3 How to drive the LED Indicators 66
12.4 How to use the Digital I/Os 67
12.5 Analog Inputs 68
12.6 How to use the Serial ports 69
12.6.1 Termination and Bias Resistors *69*
12.6.2 How to configure the COM port mode *69*
12.7 How to use the Internal Cellular Modem 73
12.7.1 How to select the MiniSIM card holder to use *73*
12.7.2 Note for LE910C1-NF1 Modem: AT&T / Verizon firmware support *73*
12.7.3 How to disable/enable the diversity (CELL DIV) function *74*
12.8 Wi-Fi Regulatory Domain 74
12.9 How to read the programmable pushbutton status 74
12.10 The Ignition Key 75
12.10.1 Ignition monitoring service *76*
12.11 Timestamps and Tamper Detect 76
12.11.1 Tamper event system service *76*
12.12 How to output Accelerometer and Gyroscope values 78
12.13 How to read the RTC 78
12.14 How to read the Internal Temperature 78
12.15 How to use the Watchdog 79
12.15.1 How to start/stop the Watchdog from the command line *79*
12.15.2 For more information *79*
12.16 How to read the CPU Unique ID 79
12.17 User-programmable pushbutton: factory restore 80
12.17.1 How the restore mode works *80*
12.17.2 How to use the user-programmable pushbutton for other applications *80*

13 Mechanical specifications 81
13.1 Product mechanical dimensions 81

14 How to install the product 83

14.1 How to install the product on a DIN Rail 84

15 Power supply. How to turn ON/OFF and reset the product 85
15.1 Power supply specifications 85
15.2 Power IN connector specifications 85
15.3 How to supply power and turn ON the product 86
15.4 How to turn OFF the product 87
15.5 How to reduce the power consumption of the product 87
15.6 How to hardware reset the product 87

16 How to maintain the product 89
16.1 How to safely remove the power supply 89
16.2 How to verify the installation of the product 89
16.3 How to clean the product 89

17 How to decommission the product 91

Notes 93

1 SAFETY INSTRUCTIONS

IMPORTANT: Read carefully and understand the instructions and warnings contained in this document before installing / using the product. Keep this document for future reference.

To lower the risk of personal injury, electric shock, fire or damage to equipment, observe the instructions and warnings contained in this document.

Failure to comply with the instructions and warnings contained in this document, violates the standards of safety, design, manufacture, and intended use of the product.

Eurotech assume no liability for any damage caused by failure to observe the instructions and warnings contained in this document.

Whenever you have any doubt regarding the correct understanding of this document, contact the Eurotech Technical Support (for more information see "How to receive technical assistance" on page 17).

1.1 Warning messages

1.1.1 Warning messages for harm to persons

To indicate an imminently hazardous situation which, if not avoided, will result in death or serious injury, the following message is used:

DANGER	
Sign (if necessary)	**TEXT THAT EXPLAINS THE HAZARD AND THE CONSEQUENCES OF NOT AVOIDING IT.** **Text that explains how to avoid this hazard.**

To indicate a potentially hazardous situation which, if not avoided, could result in death or serious injury, the following message is used:

WARNING	
Sign (if necessary)	**TEXT THAT EXPLAINS THE HAZARD AND THE CONSEQUENCES OF NOT AVOIDING IT.** **Text that explains how to avoid this hazard.**

To indicate a potentially hazardous situation which, if not avoided, could result in minor or moderate injury, the following message is used:

CAUTION	
Sign (if necessary)	**TEXT THAT EXPLAINS THE HAZARD AND THE CONSEQUENCES OF NOT AVOIDING IT.** **Text that explains how to avoid this hazard.**

1.1.2 *Warning messages for damage to property*

To indicate potential risks of damage to the supported product (or to other property), the following message is used:

NOTICE	
Sign (if necessary)	**Text that explains how to avoid damaging the supported product (or other property)**

1.2 Warning: power supply safety

WARNING

ELECTRIC SHOCK HAZARD

Failure to supply power correctly or to follow all operating instructions correctly, may create an electric shock hazard, which could result in personal injury or loss of life, and / or damage the equipment or other property.

To avoid injuries and safely supply power to the product, complete the following steps:

1. **Observe all the instructions for safety, installation, and operation**
2. **Make sure your hands are dry**
3. **Make sure that all the cables to use:**
   a. **Are in good condition**
   b. **Meet the product requirements and comply with the relevant standards and regulations**
4. **Position cables with care. Do not position cables in places where they may be trampled or compressed**
5. **Make sure that the power-points and plugs are in good condition before using them**
6. **Do not overload the power-points and plugs**
7. **Make sure that the product maintains a proper grounding connection. Always use the earth protection terminal to connect the ReliaGATE 10-14 to an earth point in the installation: see also "Earth connection terminal" on page 57**
8. **Use a power supply that meets the product requirements and complies with the relevant standards and regulations. In case of uncertainties, contact the Eurotech Technical Support Team (for more information see "How to receive technical assistance" on page 17)**
9. **Connect power after the installation of the system has been completed**
10. **Never connect or disconnect the cables with the system or the external apparatus switched ON.**

1.3 Caution: wireless safety

CAUTION

The antennas used with the product must be installed with care, avoiding any interference with other electronic devices and keeping a distance from persons greater than 20 cm. If these requirements cannot be satisfied, the system integrator has to assess the final product with respect to SAR regulations.

1.4 Caution: product's surfaces may become hot

Depending on the operating environment temperature, product's surfaces may become hot, creating a burn hazard. **Always allow the product's surfaces to cool before touching them**.

(This page has been intentionally left blank)

2 CONSIGNES DE SECURITE

IMPORTANT: Lire attentivement et bien respecter les instructions et les avertissements contenus dans ce document avant d'installer / d'utiliser le produit. Conserver ce document pour s'y référer à l'avenir.

Pour éviter les risques de blessures, de choc électrique, d'incendie ou de détérioration du matériel, bien suivre les instructions et les avertissements contenus dans ce document.

Le non-respect des instructions et des avertissements contenus dans ce document constitue une violation des normes de sécurité, de conception, de fabrication et d'utilisation prévue du produit.

Eurotech rejette toute responsabilité pour les dommages causés en cas de non-respect des instructions et des avertissements contenus dans ce document.

En cas de doute sur la compréhension de ce document, contacter le Support Technique d' Eurotech (pour plus d'informations voir "Comment obtenir une assistance technique" page 19).

2.1 Messages d'avertissement

2.1.1 Messages d'avertissement relatifs au dommage aux personnes

Pour signaler une situation dangereuse imminente qui, si elle n'est pas évitée, entraînera la mort ou un préjudice grave le message suivant est utilisé:

DANGER	
Signal (si besoin)	**TEXTE EXPLIQUANT LE DANGER ET SES CONSÉQUENCES.** **Texte expliquant comment éviter ce danger.**

Pour signaler une situation potentiellement dangereuse qui, si elle n'est pas évitée, pourrait entraîner la mort ou un préjudice grave le message suivant est utilisé:

AVERTISSEMENT	
Signal (si besoin)	**TEXTE EXPLIQUANT LE DANGER ET SES CONSÉQUENCES.** **Texte expliquant comment éviter ce danger.**

Pour signaler une situation potentiellement dangereuse qui, si elle n'est pas évitée, pourrait entraîner un préjudice mineur ou modéré le message suivant est utilisé:

ATTENTION	
Signal (si besoin)	**TEXTE EXPLIQUANT LE DANGER ET SES CONSÉQUENCES.** **Texte expliquant comment éviter ce danger.**

2.1.2 *Messages d'avertissement relatifs aux dommages matériels*

Pour signaler les risques potentiels de détérioration du produit (ou des produits annexes), le message suivant est utilisé:

AVIS	
Signal (si besoin)	**Texte expliquant comment éviter d'endommager le produit (ou des produits annexes)**

2.2 Avertissement: sécurité de l'alimentation électrique

AVERTISSEMENT

RISQUE DE CHOC ÉLECTRIQUE

Une alimentation électrique incorrecte peut créer un risque de choc électrique, pouvant entraîner des blessures corporelles ou la perte de vies humaines, et / ou endommager le produit ou d'autres biens.

Pour éviter les blessures et brancher l'appareil en toute sécurité, procéder comme suit:

1. **Respecter toutes les consignes de sécurité, d'installation et d'utilisation**
2. **S'assurer que les mains sont sèches**
3. **S'assurer que tous les câbles utilisés:**
   a. **Sont en bon état**
   b. **Répondent aux exigences du produit et soient conformes aux normes et réglementations en vigueur**
4. **Positionner les câbles avec soin. Ne pas les placer dans des endroits où ils risquent d'être piétinés ou comprimés**
5. **S'assurer que les prises de courant et les connecteurs d'alimentation sont en bon état avant de les utiliser**
6. **Ne pas surcharger les prises de courant et les connecteurs d'alimentation**
7. **S'assurer que le produit est correctement relié à la terre.**
   Utilisez toujours le point de mise à la terre pour connecter le ReliaGATE 10-14 à un point de terre de l'installation: voir aussi "Earth connection terminal" page 57
8. **Utiliser une alimentation électrique conforme aux exigences du produit et conforme aux normes et réglementations en vigueur. En cas d'incertitude, contacter l'équipe d'assistance technique d'Eurotech (pour plus d'informations, voir "Comment obtenir une assistance technique" page 19)**
9. **Ne Brancher l'alimentation électrique qu'une fois l'installation du système terminée**
10. **Ne jamais brancher ou débrancher les câbles lorsque le système ou un appareil périphérique est sous tension.**

2.3 Attention: sécurité sur la connectivité sans fil

ATTENTION

Les antennes utilisées avec le produit doivent être installées avec soin, en évitant toute interférence avec d'autres appareils électroniques et à au moins 20 cm des personnes. Si ces exigences ne peuvent être satisfaites, l'intégrateur du système doit évaluer le produit final par rapport à la réglementation SAR.

2.4 Attention: les surfaces du produit peuvent devenir chaudes

Selon la température ambiante lors de l'utilisation, les surfaces du produit peuvent devenir brûlantes, engendrant un risque de brûlure. **Laisser toujours les surfaces du produit refroidir avant de les toucher**.

(This page has been intentionally left blank)

3 HOW TO RECEIVE TECHNICAL ASSISTANCE

3.1 How to ask for technical support

To ask for technical support, complete the following steps

1. Go to the Eurotech Global Support Centre: https://support.eurotech.com/
2. Submit a support request
3. Wait for a reply from Eurotech Technical Support with the information requested

3.2 How to send a product for repair

Any product returned to Eurotech, that is found to be damaged due to inadequate packaging, will not be covered by the warranty.

To send a product for repair, complete the following steps:

1. Go to the Eurotech Global Support Centre: https://support.eurotech.com/
2. Submit an RMA request
3. Wait for a reply from the RMA Department. It will contain:
   - The RMA number
   - The shipping information
4. Pack the product adequately using anti-static material and place it in a sturdy box with enough packing material to protect it from shocks and vibrations
5. Ship the product to Eurotech following the information received from the RMA Department.

(This page has been intentionally left blank)

4 COMMENT OBTENIR UNE ASSISTANCE TECHNIQUE

4.1 Comment contacter le support technique

Pour demander un support technique, procéder comme suit:

1. Se connecter au Eurotech Global Support Centre sur: https://support.eurotech.com/
2. Envoyer une demande d'assistance
3. Attendre une réponse du support technique d'Eurotech avec les informations demandées.

4.2 Comment retourner un produit en service après vente

Tout produit renvoyé à Eurotech, qui se trouve endommagé en raison d'un emballage inadéquat, ne sera pas couvert par la garantie.

Pour retourner un produit en Service Après Vente, procéder comme suit:

1. Se connecter au Support Eurotech sur: https://support.eurotech.com/
2. Faire une demande de RMA
3. Attendre une réponse du service RMA qui indiquera:
   - Le numéro de RMA
   - Les informations pour l'expédition
4. Emballer le produit de manière adéquate en utilisant des protections antistatiques et le placer dans un conditionnement solide contenant suffisamment de matériau d'emballage pour le protéger des chocs et des vibrations
5. Expédier le produit chez Eurotech selon les informations reçues par mail.

(This page has been intentionally left blank)

5 CONVENTIONS USED

5.1 Conventions for signal names

Convention	Description
GND	Ground
#	Active low signal
+	Positive signal; Positive signal in differential pair
-	Negative signal; Negative signal in differential pair
3.3	3.3 V signal level
5	5 V signal level
NC	No Connection
Reserved	Use is reserved to Eurotech

5.2 Conventions for signal types

Convention	Description
I	Signal is an input to the system
O	Signal is an output from the system
IO	Signal may be input or output
P	Power and Ground
A	Analog signal
NC	No Connection
Reserved	Use is reserved to Eurotech

(This page has been intentionally left blank)

6 PRODUCT OVERVIEW

6.1 Product description

The ReliaGATE 10-14 is a Multi-service IoT Gateway that has been designed to deliver LTE connectivity (with 3G and 2G[1] fallback) to industrial and lightly rugged applications.

Based on the i.MX 8M Mini Quad Cortex-A53 1.6 GHz processor, with up to 4GB of RAM, up to 64GB of eMMC and a user-accessible microSD slot, the ReliaGATE 10-14 is a low power gateway suitable for demanding use cases: it supports a 9 to 30V power supply with transient protection, Display Port video output, two protected and isolated RS-232/422/485 serial ports, two noise and surge protected USB ports, six optoisolated digital and two isolated analog interfaces.

The ReliaGATE 10-14 features a wide range of connectivity capabilities: it integrates a carrier certified LTE Cat 1 cellular modem with dual SIM support, Wi-Fi, Bluetooth BLE/4.2, and two Gigabit Ethernet ports; an internal GNSS provides precise geolocation capabilities. Expansion options allow adding extra features with side modules, such as the LoRa LPWAN Gateway unit, or the DAQ unit that provides analog input and more DI/O ports.

The ReliaGATE 10-14 is equipped with TPM 2.0, which provides standard cutting-edge security features that protect the system integrity and authenticity against unauthorized manipulations. It also features hardware anti-tampering and is designed to meet IEC 62443-4-1/-4-2 cybersecurity (Professional Service).

The ReliaGATE 10-14 comes with Everyware Software Framework (ESF), a commercial, enterprise-ready edition of Eclipse Kura, the open source Java/OSGi middleware for IoT Edge Gateways. Distributed and supported by Eurotech, ESF supports ready-to-use field protocols (including Modbus, OPC-UA, S7), MQTT connectivity, web-based visual data flow programming and deep configuration. ESF is also integrated with Everyware Cloud (EC), Eurotech IoT Integration Platform (separately available), enabling advanced diagnostics, provisioning, and full remote device access and management.

For more information visit www.eurotech.com.

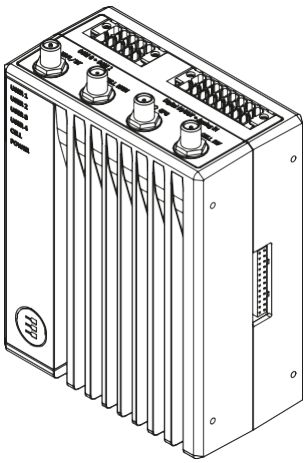

Figure 6.1 - The ReliaGATE 10-14

[1]Not available in all product versions, see "Internal Cellular Modem and GNSS (vers: -35, -36, -37)" on page 48

6.2 Intended use and not allowed uses of the product

The product is intended for professional use and must be installed by qualified personnel only.

The product must be installed in a secured location, accessible to authorized personnel only (for example in a cabinet / technical compartment).

6.2.1 Deterministic output notice

NOTICE
This product is not intended to be physically or logically connected to an automation process.

6.2.2 Intended use

The ReliaGATE 10-14 is a Multi-service IoT Gateway that has been designed to deliver LTE connectivity (with 3G and 2G[1] fallback) to industrial and lightly rugged applications.

The ReliaGATE 10-14 must:

- Be installed in a secured location, only accessible to authorized personnel (for example in a cabinet/ technical compartment), and not exposed to atmospheric agents
- Be used indoors or in automotive applications*
- Be used with appropriate interconnecting and power cables
- Be used with an external DC power supply source that:
  - Must meet the requirements stated on the identification label of the product
  - Must deliver a minimum power of 25W
  - Must include an external Type F fuse on the line coming from the negative terminal (a 2A Type F fuse is appropriate for 24VDC operation).

* Before using the ReliaGATE 10-14 in automotive applications in any EU Member State, switch-OFF the Wi-Fi band: 5150 - 5350 MHz.

6.2.3 Not allowed uses

Do not use the ReliaGATE 10-14:

- In railway applications
- In defence applications
- Outdoors
- In safety-critical applications
- In environments with potentially explosive atmospheres
- If not installed according to the instructions and warnings contained in this document.

When used in automotive applications in any EU Member State, do not use the ReliaGATE 10-14 with the Wi-Fi band: 5150 - 5350 MHz enabled.

[1] Not available in all product versions, see "Internal Cellular Modem and GNSS (vers: -35, -36, -37)" on page 48

6.3 Technical specifications

The ReliaGATE 10-14 family is available in several -XY versions, for example: ReliaGATE 10-14-35 (where: X = 3, Y = 5).

The technical specifications are the following, according to the respective versions:

Specifications		Description according to -XY versions			
		-32	-35	-36	-37
Processor	**CPU**	i.MX 8M Mini Quad Cortex-A53 1.6 GHz			
	GPU	2D and 3D Acceleration Resolution: 1080p (1920x1080)			
	Security	Secure Boot (HAB), Cryptographic Acceleration (RSA, AES, 3DES, DES, PKHA, ECC), Arm TrustZone (TZ) Architecture			
Memory	**RAM**	2 GB (Up to 4GB LPDDR4)			
Storage	**Embedded**	16 GB (up to 32 GB)			
	Additional	1x MicroSD holder (user accessible)			
Wired Interfaces	**Ethernet**	2x 10/100/1000 on RJ45 connectors			
	USB	2x Host USB 2.0 (noise and surge protected) on Type A connectors			
	Serial	2x RS-232/422/485 protected and isolated (5 wires), 1x Serial Console TTL			
	Digital I/O	4x Digital Inputs Optoisolated, 2x Digital Outputs Optoisolated, 2x 11-bit Analog Inputs Isolated			
	Video Out	1x Display Port			
Wireless Interfaces	**Internal Cellular Modem**	No	NA LTE Cat 1	EU LTE Cat 1	AP LTE Cat 1
	GNSS	No	Yes		
	Wi-Fi/BT	802.11 a/b/g/n/ac (2.4GHz, 5GHz) - BLE4.2 (2.4GHz)			
	Antenna Connectors	1x RP-SMA Wi-Fi/BT	1x RP-SMA Wi-Fi/BT, 2x SMA Cellular, 1x SMA GNSS		
Other	**RTC**	Yes (backup supercap)			
	Watchdog	Yes (system level)			
	EEPROM	256 Kbit			
	TPM	TPM 2.0			
	Anti-Tamper	Yes (service panel and case intrusion detection; Event Logging with Time Stamping)			
	Sensors	Temperature (inside the product)			
	Accel/Gyro	3D Accelerometer, 3D Gyroscope			
	LED Indicators	1x Power, 1x Cellular Activity, 4x User Configurable			
	Pushbuttons	1x Hardware reset, 1x User-programmable pushbutton			
	SIM Card Holders	No	2x miniSIM card holders (user accessible)		

Specifications		Description according to -XY versions			
		-32	-35	-36	-37
Expansion Interfaces		Expansion Connector compatible with ReliaIO 10-12 and ReliaWAN 10-12			
Power	**Input**	Nominal: 12 or 24 VDC; Range: 9 to 30 VDC with transient protection			
	Consumption	25 W typical			
	Transient Voltage	1500 V peak			
Environment	**Operating Temperature**	-30°C to +70 °C(1)			
	Storage Temperature	-40 to +85 °C			
	Relative Humidity	5 to 95% (non-condensing) at +40°C			
Certifications	**Regulatory**	CE, FCC, ISED	CE, FCC, ISED	CE	JATE, TELEC
	Safety	EN 62368-1			
	Vertical	E-Mark			
	Environmental	RoHS3; REACH			
	Wi-Fi/BT Radio	RED, FCC, ISED	FCC, ISED	RED	JATE, TELEC
	Cellular Radio	No	FCC, ISED, PTCRB, AT&T, Verizon, T-Mobile	RED	JATE, TELEC
	Ingress	IP40			
Mechanical	**Dimensions**	107 (L) x 85 (W) x 46 (H); mm - Antennas Connectors and Mounting Bracket excluded			
	Weight	330g (without DIN Rail Mounting Clip/Bracket)			
	Enclosure	Material: Aluminum/Magnesium Alloy			
Software	**OS**	Eurotech Everyware Linux			
	SDK	Yocto-based Eclipse Tooling, Azul Java			
	IoT Framework	Everyware Software Framework (Java/OSGi)			

(1) The product will protect itself above 70°C by reducing performance, turning off the cellular connection, and ultimately shutting down. To obtain maximum performance, the product should be mounted using the provided DIN rail clip.

6.4 Optional accessories

Accessory Order Code	Accessory Description
E16-50-11-00	Power Supply 24W; IN: 100-240VAC; OUT: 24VDC, 1A (EU, US, UK Blades)
99ACC-70190-A0001	TTL-to-USB Cable
E29-10-11-00	2.45/5.8 GHz Wi-Fi/Bluetooth Antenna: Linx Technologies ANT-DB1-RAF-RPS
99ACC-60750-C0008	GNSS Antenna: 2J-ANTENNA 2J4301MPGF
99ACC-60750-C0004	Cellular Antenna: 2J-ANTENNA 2JW0124-C868B
99ACC-60750-C0010	Cellular Antenna: 2J-ANTENNA 2JW0124Z-C868B

For more information see: "Antennas list" on page 35.

6.5 Labels on the product

The following labels are placed on the product:

Label type and content	Label position	Label example
Product Label* - Eurotech logo - Manufacturer address - Product number - Model number (example) - Regulatory marks* - Power supply specifications** - Serial number - MAC ID number* - IMEI number* - Radio module name	Rear side of the product, see "Rear Side overview" on page 46	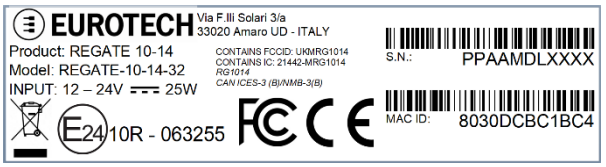
Service Interfaces Overview - Gives an overview of the Service Interfaces. See also "Service Interfaces overview" on page 43	Internal side of the Service Panel cover, see "Service Interfaces overview" on page 43	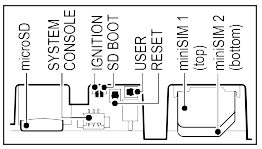

* Information included in the label depends on the product version

** The symbol ⎓ stands for direct current

(This page has been intentionally left blank)

7 REGULATORY INFORMATION

This section provides regulatory information for the ReliaGATE 10-14 (hereafter referred to as "this "product").
Upon request, Eurotech can provide the product Declaration of Conformity.
For details and more information contact the Eurotech Technical Support (see "How to receive technical assistance" on page 17).

7.1 CE marking

Some versions of this product are CE marked (for more information see "Technical specifications" on page 25). They comply with the regulatory information reported in the following sections.
Eurotech is not responsible for the use of this product together with equipment (for example: power supplies, personal computers, etc.) that are not CE marked and not compliant with the requirements specified in this document.

7.1.1 Safety

This product is compliant with the standard EN 62368-1:2014 on the safety requirements in information and communication technology equipment.

7.1.2 Packaging and packaging waste

This product is manufactured in compliance with the European Parliament and Council Directive 94/62/EC of 20 December 1994 on packaging and packaging waste.

7.1.3 Product disposal and recycling

This product, at the end of its life cycle, must be collected separately and managed in accordance with the provisions of the Directive 2012/19/EU on waste of electrical and electronic equipment.

For details and more information:

- See: "WEEE compliance" below
- Contact the Eurotech Technical Support (see "How to receive technical assistance" on page 17).

7.1.4 WEEE compliance

In compliance with the Directive 2012/19/EU of the European Parliament and of the Council of 4 July 2012 on waste electrical and electronic equipment (WEEE), the symbol on the right, shown on the product or within its literature, indicates separate collection for electrical and electronic equipment (EEE) that has been placed on the market after 2005.

This product, at the end of its life cycle, must be collected separately and managed in accordance with the provisions of the current Directive on waste of electrical and electronic equipment.

Because of the substances present in the product, improper disposal can cause damage to human health and to the environment.
For collecting and recycling information contact the Eurotech Technical Support (see "How to receive technical assistance" on page 17).

7.1.5 RoHS 3 compliance

This product is manufactured in compliance with the following Directives:

- Directive 2011/65/EU of the European Parliament and of the Council of 8 June 2011 on the restriction of the use of certain hazardous substances in electrical and electronic equipment.
- Commission Delegated Directive (EU) 2015/863 of 31 March 2015 amending Annex II to Directive 2011/65/EU of the European Parliament and of the Council as regards the list of restricted substances

7.1.6 Directive RED 2014/53/EU

Some versions of this product meet the requirements of the Directive 2014/53/EU of the European Parliament and of the Council of 16 April 2014 on the harmonization of the laws of the Member States relating to the making available on the market of radio equipment.
For more information see "Technical specifications" on page 25).

Modification statement

Eurotech has not approved any changes or modifications to this product by the user. Any changes or modifications could void the user's authority to operate this product.

7.1.6.1 Class II product

According to Commission Decision 2000/299/EC of 6 April 2000, establishing the initial classification of radio equipment and telecommunications terminal equipment and associated identifiers, the product falls within the scope of Class II.

Due to EU restrictions on 5 GHz Wi-Fi bands the product is limited to indoor operation and should only be operated in the frequency band 5150 MHz – 5250 MHz (U-NII-1) covering 20 MHz channels (36,40,44,48), 40 MHz channels (38,46), and 80 MHz channel (42).
Dynamic Frequency selection (DFS) as master or slave is not supported by the product.

	AT	BE	BG	CH	CY	CZ	DE
	DK	EE	EL	ES	FI	FR	HR
	HU	IE	IT	IS	LI	LT	LU
	LV	MT	NL	NO	PL	PT	RO
	SE	SI	SK	TR			

7.1.6.2 EU restrictions on 5 GHz Wi-Fi usage

Channel Number	Frequency (MHz)	Europe (ETSI)
36	5180	Indoor Usage Only
40	5200	Indoor Usage Only
44	5220	Indoor Usage Only
48	5240	Indoor Usage Only
52	5260	Not Supported
56	5280	Not Supported
60	5300	Not Supported
64	5320	Not Supported
100	5500	Not Supported
104	5520	Not Supported
108	5540	Not Supported
112	5560	Not Supported
116	5580	Not Supported
120	5600	Not Supported
124	5620	Not Supported
128	5640	Not Supported
132	5660	Not Supported
136	5680	Not Supported
140	5700	Not Supported
149	5745	Not Supported
153	5765	Not Supported
157	5785	Not Supported
161	5805	Not Supported
165	5825	Not Supported

7.2 FCC/ISED compliance

7.2.1 FCC marking

Some versions of this product are FCC marked (for more information see "Technical specifications" on page 25). They comply with the regulatory information reported in the following sections.
Eurotech is not responsible for the use of the product together with equipment (for example: power supplies, personal computers, etc.) that are not FCC marked and not compliant with the requirements specified in this document.

Certaines versions de ce produit sont certifiées FCC (pour plus d'informations, voir "Technical specifications" on page 25). Elles sont conformes à la réglementation présentée dans les sections suivantes.
Eurotech n'est pas responsable de l'utilisation du produit avec des équipements (par exemple : alimentations, ordinateurs personnels, etc.) non certifiés FCC et qui ne sont pas conformes aux exigences spécifiées dans ce document.

Modification statement

Eurotech has not approved any changes or modifications to the product by the user. Any changes or modifications could void the user's authority to operate the product.

Eurotech n'approuve aucune modification apportée à l'appareil par l'utilisateur, quelle qu'en soit la nature. Tout changement ou modification peuvent annuler le droit d'utilisation de l'appareil par l'utilisateur.

7.2.2 FCC compliance: Class B Digital Device

This device complies with part 15 of the FCC Rules. Operation is subject to the following two conditions: (1) this device may not cause harmful interference, and (2) this device must accept any interference received, including interference that may cause undesired operation.

Note: This equipment has been tested and found to comply with the limits for a Class B digital device, pursuant to part 15 of the FCC Rules. These limits are designed to provide reasonable protection against harmful interference in a residential installation. This equipment generates, uses and can radiate radio frequency energy and, if not installed and used in accordance with the instructions, may cause harmful interference to radio communications. However, there is no guarantee that interference will not occur in a particular installation. If this equipment does cause harmful interference to radio or television reception, which can be determined by turning the product OFF and ON, the user is encouraged to try to correct the interference by one or more of the following measures:

- Reorient or relocate the receiving antenna
- Increase the separation between the product and the receiver
- Connect the product into an outlet on a circuit different from that to which the receiver is connected
- Consult the dealer or an experienced radio/TV technician for help

Cet appareil est conforme à la partie 15 des règlements de la FCC. L'utilisation est soumise aux deux conditions suivantes: (1) l'appareil ne doit pas produire de brouillage, et (2) l'appareil doit accepter tout brouillage radioélectrique subi, même si le brouillage est susceptible d'en compromettre le fonctionnement.

Remarque: Cet équipement a été testé et déclaré conforme aux limites d'un appareil numérique de classe B, conformément à la partie 15 des règlements de la FCC. Ces limites sont conçues pour fournir une protection raisonnable contre les interférences nuisibles dans une installation résidentielle. Ce produit génère, utilise et peut émettre des ondes radio qui peuvent causer des interférences nuisibles s'il n'est pas installé et utilisé conformément aux instructions. Si néanmoins ce produit cause des interférences nuisibles à la réception de la radio ou de la télévision, ce qui peut être déterminé en éteignant et en rallumant l'appareil, l'utilisateur est encouragé à essayer de corriger l'interférence par une ou plusieurs des mesures suivantes:

- *Réorienter ou déplacer l'antenne de réception*
- *Augmenter la distance entre le produit et le récepteur*
- *Brancher l'appareil sur une prise de courant différente de celle à laquelle le récepteur est raccordé*
- *Consulter le revendeur ou un technicien radio/TV expérimenté pour obtenir de l'aide.*

7.2.3 FCC restrictions on 5 GHz Wi-Fi usage

Channel Number	Frequency (MHz)	North America (FCC)
36	5180	Indoor Usage Only
40	5200	Indoor Usage Only
44	5220	Indoor Usage Only
48	5240	Indoor Usage Only
52	5260	Not Supported
56	5280	Not Supported
60	5300	Not Supported
64	5320	Not Supported
100	5500	Not Supported
104	5520	Not Supported
108	5540	Not Supported
112	5560	Not Supported
116	5580	Not Supported
120	5600	Not Supported
124	5620	Not Supported
128	5640	Not Supported
132	5660	Not Supported
136	5680	Not Supported
140	5700	Not Supported
149	5745	Supported
153	5765	Supported
157	5785	Supported
161	5805	Supported
165	5825	Supported

7.2.4 ISED Canada compliance

This device contains licence-exempt transmitter(s)/receiver(s) that comply with Innovation, Science and Economic Development Canada's licence-exempt RSS(s). Operation is subject to the following two conditions: (1) this device may not cause harmful interference, and (2) this device must accept any interference received, including interference that may cause undesired operation.

This radio transmitter has been approved by Innovation, Science and Economic Development Canada to operate with the antenna types listed below, with the maximum permissible gain indicated. Antenna types not included in this list that have a gain greater than the maximum gain indicated for any type listed are strictly prohibited for use with this device.

L'émetteur/récepteur exempt de licence contenu dans le présent appareil est conforme aux CNR d'Innovation, Sciences et Développement économique Canada applicables aux appareils radio exempts de licence. L'exploitation est autorisée aux deux conditions suivantes: (1) l'appareil ne doit pas produire de brouillage, et (2) l'appareil doit accepter tout brouillage radioélectrique subi, même si le brouillage est susceptible d'en compromettre le fonctionnement.

Le présent émetteur radio a été approuvé par Innovation, Sciences et Développement économique Canada pour fonctionner avec les types d'antenne énumérés ci dessous et ayant un gain admissible maximal. Les types d'antenne non inclus dans cette liste, et dont le gain est supérieur au gain maximal indiqué pour tout type figurant sur la liste, sont strictement interdits pour l'exploitation de l'émetteur.

7.2.5 ISED Class B Digital Device Notice

ICES-003 Class B Notice - Avis NMB-003, Classe B.

This Class B digital apparatus complies with Canadian ICES-003.

Cet appareil numérique de la classe B est conforme à la norme NMB-003 du Canada.

7.2.6 Responsible parties: Canadian Representative contact information

The Canadian Representative has the following contact information:

Le Représentant Canadien dispose des coordonnées suivantes:

Company Name	Canadian Certification Consulting, Inc.
Company Number[1]	10842A
Company Address	2210 Horizion Drive, Suite 17
City	West Kelowna
Province/State	BC
Postal Code	V1Z 3L4
Country	Canada
Contact Name	Jon Hughes
Title	President
Phone Number	1-250-575-1719
Email	info@can-cert.com

7.2.7 RF Radiation Exposure Statement

This device complies with FCC and ISED radiation exposure limits set forth for an uncontrolled environment. The antenna should be installed and operated with minimum distance of 20 cm between the radiator and your body.
This device and its antenna(s) must not be co-located or operating in conjunction with any other antenna or transmitter except in accordance with FCC multi-transmitter product procedures.
This device complies with Health Canada's Safety Code. The installer of this device should ensure that RF radiation is not emitted in excess of the Health Canada's requirement.

[1] Company Number is issued by Innovation, Science and Economic Development Canada (formerly Industry Canada)
Le numéro d'entreprise est délivré par Innovation, Science et Développement économique Canada (anciennement Industrie Canada)

Cet appareil est conforme aux limites d'exposition aux rayonnements de l'ISED pour un environnement non contrôlé. L'antenne doit être installé de façon à garder une distance minimale de 20 centimètres entre la source de rayonnements et votre corps.
Cet appareil et son (ses) antenne(s) ne doivent pas être co-localisés ou utilisés en conjonction avec une autre antenne ou un autre émetteur, sauf en conformité avec les procédures du produit multi-émetteur de la FCC.
Cet appareil est conforme avec Santé Canada Code de sécurité 6. Le programme d'installation de cet appareil doit s'assurer que les rayonnements RF n'est pas émis au-delà de l'exigence de Santé Canada.

7.2.8 Labeling Information

The following information is stated on the product label(s):

Les informations suivantes sont indiquées sur l'étiquette (les étiquettes) du produit:

- Contains FCC ID: UKM-RG1014
- Contains IC: 21442-RG1014
- Contains FCC ID: RI7LE910CXNF
- Contains IC: 5131A-LE910CXNF

7.3 Antennas list

The ReliaGATE 10-14 has been certified with the following antennas:

Le ReliaGATE 10-14 a été certifié avec les antennes suivantes:

Types *Types*	Manufacturer and Model *Fabricant et Modèle*	Peak Gain (dBi) *Max. Gain (dBi)*
Wi-Fi/BT	Linx Technologies ANT-DB1-RAF-RPS	2.5 dBi (2.4 GHz) / 4.6 dBi (5 GHz)
GNSS	2J-ANTENNA 2J4301MPGF	28 dB
Cellular	2J-ANTENNA 2JW0124-C868B	0.4 dBi (700/850/900 MHz), 2.6 dBi (1700/1800/1900/2100 MHz)
Cellular	2J-ANTENNA 2JW0124Z-C868B	0.4 dBi (700/850/900 MHz), 2.6 dBi (1700/1800/1900/2100 MHz)

NOTICE

Within the EU, antennas have to be used in compliance with the RED requirements.
Within the US/Canada, antennas have to be used in compliance with the FCC/ISED requirements.

Au sein de l'UE, les antennes doivent être utilisées conformément aux exigences RED.
Aux États-Unis et au Canada, les antennes doivent être utilisées conformément aux exigences de la FCC/ISED.

7.4 REACH compliance

This product is assessed to be compliant with the regulation (EC) No 1907/2006 of the European Parliament and of the Council of 18 December 2006 concerning the Registration, Evaluation, Authorisation and Restriction of Chemicals (REACH), with the exceptions allowed by the EU Technical Committee.

Eurotech has set in place a monitoring process to assess compliance to REACH regulation.
For details and more information contact the Eurotech Technical Support (see "How to receive technical assistance" on page 17).

(This page has been intentionally left blank)

8 INTERFACES OVERVIEW

8.1 LED Indicators overview

The LED Indicators are as follows:

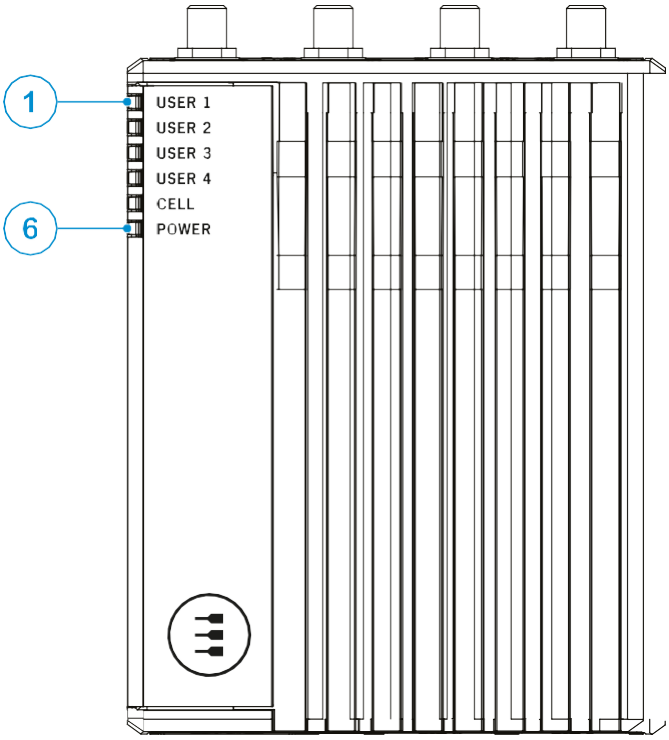

Figure 8.1 - LED Indicators layout

Ref#	Use	Color
1	USER1 (General Purpose)	Green
2	USER2 (General Purpose)	Green
3	USER3 (General Purpose)	Amber
4	USER4 (General Purpose)	Amber
5	CELL (Internal Cellular Modem activity; only for versions: -35 -36 -37): - LED ON: Modem ON - LED blinking: Modem connected to cellular network	Green
6	POWER: - LED ON: Product powered by the external source - LED OFF: Product not powered by the external source	Blue

Table 8.1 - LED Indicators description

8.2 Top Side Interfaces overview

The Top Side Interfaces are as follows:

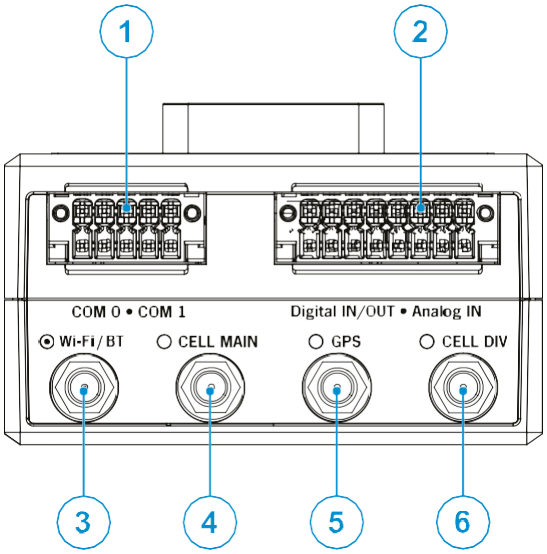

Figure 8.2 - Top Side Interfaces layout

Ref#	Description
1	COM 0/1 connector
2	Digital IN/OUT, Analog IN connector
3	Antenna connector for 2.4 GHz/ 5 GHz Wi-Fi/ Bluetooth
4	Main antenna connector for the Internal Cellular Modem (only for versions: -35, -36, -37)
5	Antenna connector for the Internal GNSS (only for versions: -35, -36, -37)
6	Diversity antenna connector for the Internal Cellular Modem (only for versions: -35, -36, -37)

Table 8.2 - Top Side Interfaces description

8.3 Bottom Side Interfaces overview

The Bottom Side Interfaces are as follows:

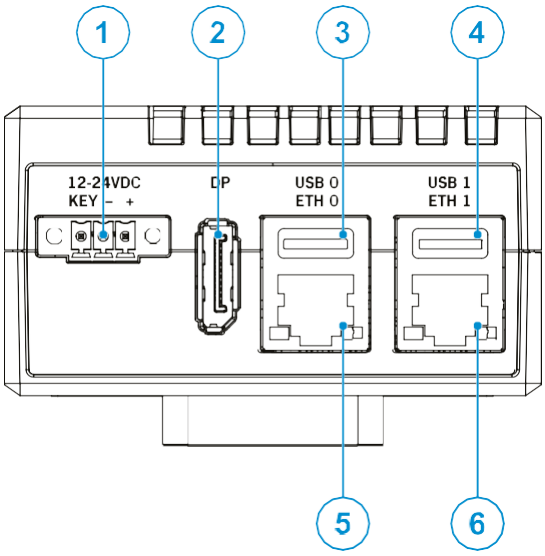

Figure 8.3 - Bottom Side Interfaces layout

Ref#	Description
1	Power IN connector
2	DisplayPort
3	USB0 connector
4	USB1 connector
5	Ethernet ETH0 connector
6	Ethernet ETH1 connector

Table 8.3 - Bottom Side Interfaces description

8.4 Right Side Interfaces overview

The Right Side Interface is as follows:

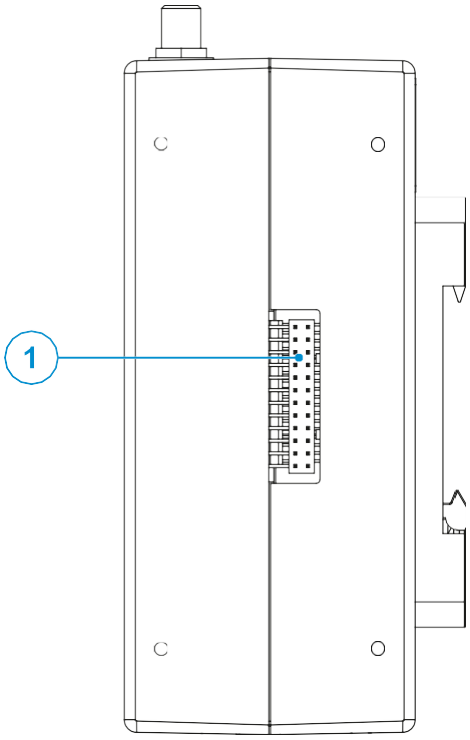

Figure 8.4 - Right Side Interfaces layout

Ref#	Description
1	Expansion connector

Table 8.4 - Right Side Interfaces description

For more information see:

- "Expansion" on page 56

8.5 Service Panel overview (Left Side)

The Service Panel is placed on the Left Side and includes the Service Interfaces.

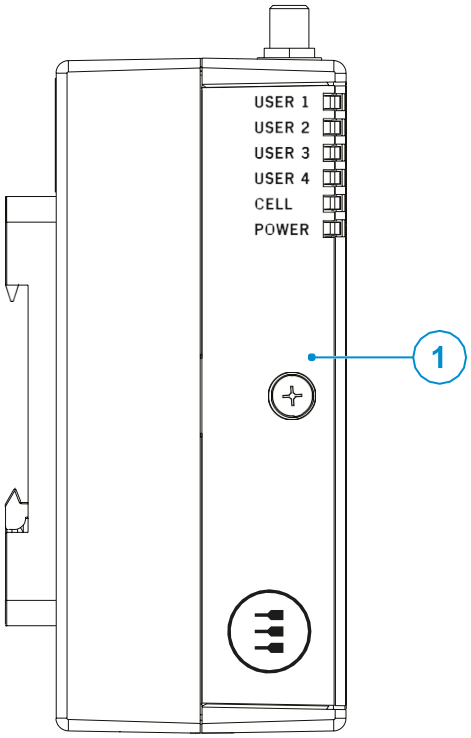

Ref#	Description
1	Service Panel: includes the Service Interfaces

8.5.1 Anti-Tamper Function

The ReliaGATE 10-14 is equipped with anti-tamper detection: when the Service Panel (or the case) is opened, the intrusion event is timestamped and recorded by the RTC. The intrusion detection is active even when the device is not powered.

For more information see "Case Intrusion" on page 58.

8.5.2 *How to remove the Service Panel cover*

NOTICE
The IP grade is not maintained when the Service Panel cover is removed. **Do not use the product for extended periods of time with the Service Panel cover removed, otherwise dust and other particulates may enter the system.** **If it is necessary to have extended access to the Service Panel, take appropriate precautions to stop any particulates from entering.**

To remove the Service Panel cover, complete the following steps:

1. Release the locking screw

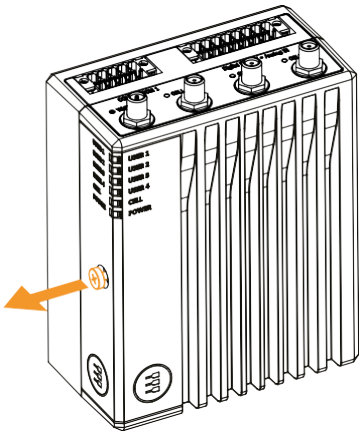

2. Slide and open the Service Panel Cover.
   Anti-tamper is triggered: the event is timestamped and recorded by the RTC.
   You can now have access to the Service Interfaces.

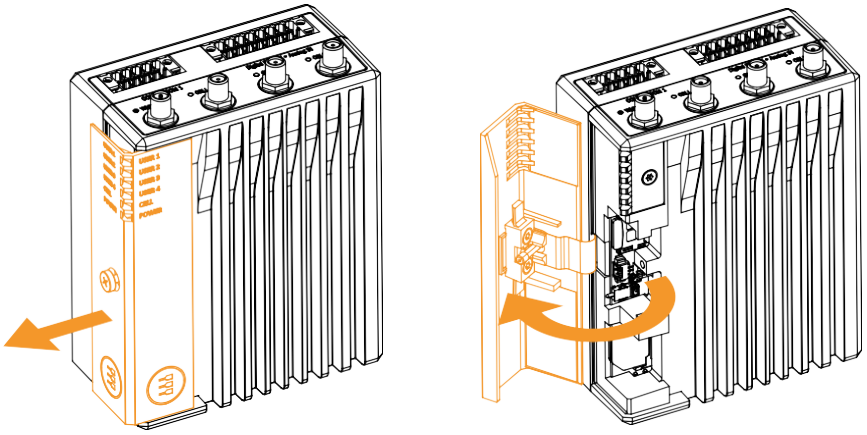

8.5.3 *Service Interfaces overview*

The Interfaces available in the Service Panel are as follows:

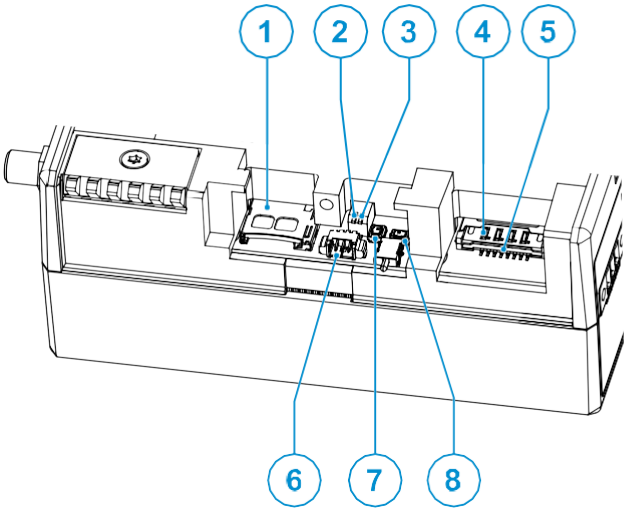

Figure 8.5 - Service Interfaces layout

Ref#	Description
1	MicroSD push-push card holder
2	DIP-switch for the Ignition Key control functionality
3	DIP-switch for SD card/internal eMMC BOOT
4	MiniSIM push-pull card holder 1 (top)
5	MiniSIM push-pull card holder 2 (bottom)
6	TTL System Serial Console
7	Reset pushbutton
8	User-programmable pushbutton (default: Factory restore)

Table 8.5 - Service Interfaces description

A label placed on the internal side of the Service Panel cover gives an overview of the Service Interfaces:

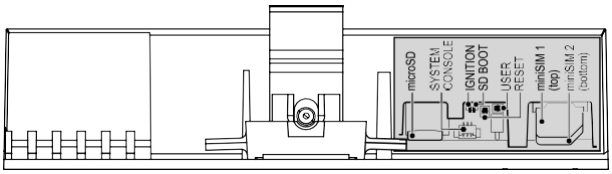

Figure 8.6 - Service Interfaces Label

8.5.3.1 DIP-switches meaning

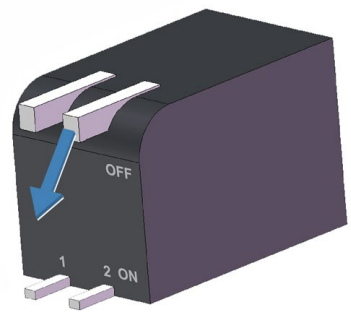

The DIP-switches allow you to control the following functions:

SW#	Function	Description
SW#1	Ignition Key control functionality	ON (slider down): A voltage must be present in the Ignition Key input for power up OFF (slider up): The Ignition Key input state does not affect power up. For more information see: - "The Ignition Key" on page 75 - "How to turn OFF the product" on page 87
SW#2	SD card/ Internal eMMC BOOT	ON (slider down): Boot from internal eMMC OFF (slider up): Boot from SD

8.5.4 *MicroSD and MiniSIM card holders*

Both the MicroSD card holder and the dual MiniSIM cards holder are placed **on the top side** of the circuit board in the Service Panel:

- The MicroSD card holder is a **push-push** type.
  The MicroSD card holder allows you to insert a MicroSD card for additional data storage.
- The dual MiniSIM cards holder is a **push-pull** type.
  Insert SIM1 in the top holder.
  Disable the SIM PIN (Personal Identification Number) before inserting the SIM card in the holder. The cellular connection will not work if the SIM PIN is ON.

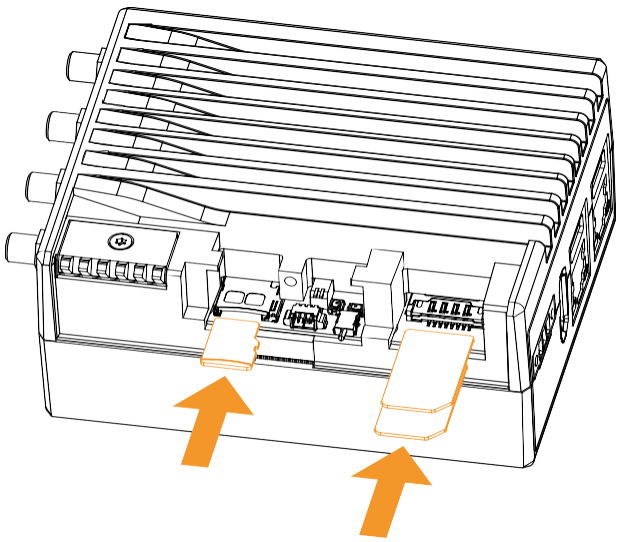

8.6 Rear Side overview

The Rear Side is as follows:

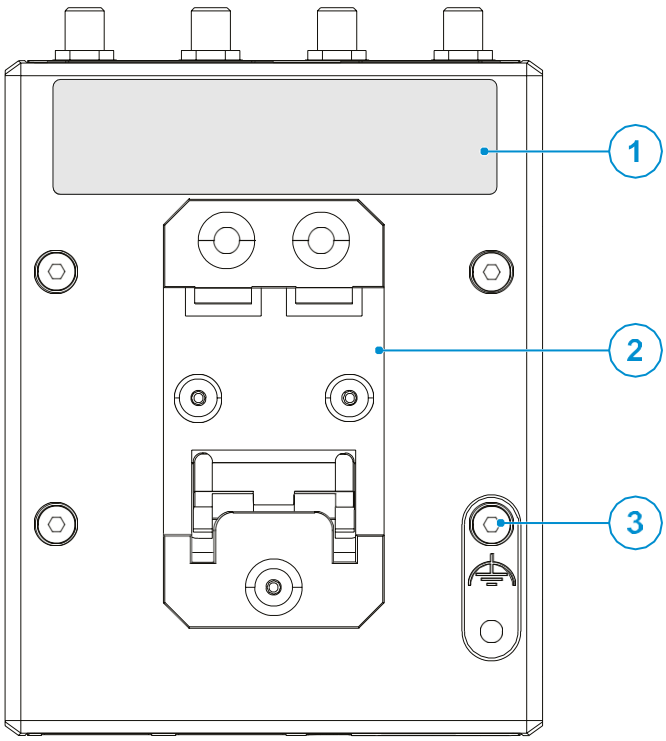

Figure 8.7 - Rear Side layout

Ref#	Description
1	Product Label position
2	DIN Rail Mounting Clip
3	Earth connection terminal

Table 8.6 - Rear Side description

9 INTERFACES IN DETAIL

9.1 Wi-Fi and Bluetooth

The ReliaGATE 10-14 integrates a dual-band (2.4 & 5GHz), 1-stream (1x1) 802.11ac Wi-Fi and Bluetooth (BT/BLE4.2) module. The antenna connector is placed on the top side.

9.1.1 Wi-Fi and Bluetooth specifications

Feature	Description
RF Spec	- Wi-Fi - 802.11 a/b/g/n/ac (2.4GHz, 5GHz @ 20/40/80MHz) - BT/BLE - 4.2
Interfaces	- WLAN SDIO 3.0 - BT UART - BT PCM/I2S - LTE Coexistence UART (WCI) - Low frequency 32.768KHz sleep clock - Single Antenna port, 50 Ohm

Support Data Rate	- 802.11a (5GHz): 6, 9, 12, 18, 24, 36, 48, 54Mbps
	- 802.11b (2.4GHz): 1, 2, 5.5, 11Mbps
	- 802.11g (2.4GHz): 6, 9, 12, 18, 24, 36, 48, 54Mbps
	- 802.11n (2.4GHz/5GHz):
	  ○ 20Mhz BW: Up to 72.2Mbps using short GI (MCS0-7)
	  ○ 40Mhz BW: Up to 144.4Mbps using short GI (MCS0-7)
	- 802.11ac (5GHz): HT20 (MCS0-8), VHT40 (MCS0-9), VHT80 (MCS0-9)

Transmission Power	- 802.11a / 54Mbps: 14 dbm - 802.11b / 11Mbps: 18 dbm - 802.11g / 54Mbps: 15 dbm - 802.11n / HT20 (MCS7): 15 dbm - 802.11ac / HT20 (MCS0): 15.5 dbm - 802.11ac / VHT40 (MCS9): 11 dbm - 802.11ac / VHT80 (MCS9): 10.5 dbm
Data Standard	IEEE 802.11a/b/g/n/ac
Modulation	BPSK, QPSK, CCK, 16QAM, 64QAM, 256QAM

9.1.2 Wi-Fi and Bluetooth antenna - Installation guidelines

The antenna must not be installed inside metal cases.

9.1.3 Wi-Fi and Bluetooth antenna connector specifications

Connector Layout:

Connector Pinout:

Pin #	Description
1	Male inner pin contact
2	Female connector body (outer thread)

Connector Specifications:
- RP-SMA connector
- Gender: Female

Mating Connector Specifications:
- RP-SMA connector
- Gender: Male

9.2 Internal Cellular Modem and GNSS (vers: -35, -36, -37)

According to the product version, the ReliaGATE 10-14 can integrate the following cellular modem variants, with GNSS functionality:

Product version	Modem variant	Technology
-35	Telit LE910C1-NF - North America	LTE Cat 1 3G Fallback
-36	Telit LE910C1-EU - Europe	LTE Cat 1 2G/3G Fallback
-37	Telit LE910C1-AP - Japan	LTE Cat 1 3G Fallback

The antennas connectors are placed on the top side.

9.2.1 Internal Cellular Modem specifications

9.2.1.1 Product features

- Rx Diversity and MIMO DL 2x2
- LTE FDD Cat.1. 3GPP release 9 compliant

9.2.1.2 LTE data

- Uplink up to 5 Mbps
- Downlink up to 10 Mbps

9.2.1.3 Supported RF bands

TELIT variant	LTE FDD (4G) bands	HSA+ (3G) bands	2G bands
LE910C1-NF	B2, B4, B5, B12, B13, B14, B66, B71	B2, B4, B5	-
LE910C1-EU	B1, B3, B7, B8, B20, B28A	B1, B3, B8	B3, B8
LE910C1-AP	B1, B3, B5, B8, B9, B18, B19, B26, B28	B1, B5, B6, B8, B19	-

9.2.1.4 TX output power

Class 3 (0.2W, 23 dBm) @ LTE

9.2.2 Main cellular antenna requirements

Feature	Value
Frequency range	Depending on the frequency band(s) provided by the network operator
Supported Bands	See "Supported RF bands" above
Gain	Gain < 3 dBi
Impedance	50 Ohm
Input power	> 33 dBm (2 W) peak power in GSM > 24 dBm average power in WCDMA & LTE
VSWR absolute max	≤ 10:1 (limit to avoid permanent damage)
VSWR recommended	≤ 2:1 (limit to fulfil all regulatory requirements)

9.2.3 Second cellular antenna requirements (for antenna diversity)

Feature	Value
Frequency range	Depending on the frequency band(s) provided by the network operator
Supported Bands	See "Supported RF bands" on the previous page
Impedance	50 Ohm
VSWR recommended	≤ 2:1 (limit to fulfil all regulatory requirements)

9.2.4 Cellular antennas - Installation guidelines

- The antenna must be installed such that it provides a separation distance of at least 20 cm from all persons and must not be co-located or operating in conjunction with any other antenna or transmitter
- The antenna must not be installed inside metal cases

9.2.5 LTE - Single antenna operation notes

Single LTE antenna operation can be supported; however, typically, wireless carriers (Mobile Network Operators) impose restrictions. Please consult with your carrier before considering single LTE antenna usage.

For optimum performance of the cellular interface, Eurotech recommends the use of both CELL MAIN and CELL DIV antenna connectors.

9.2.6 GNSS specifications

Feature		Typical Measurement
Sensitivity	**Standalone or MS Based Tracking Sensitivity**	-162.3 dBm
	Acquisition	-157.5 dBm
	Cold Start Sensitivity	-157.5 dBm
TTFF	**Hot**	1.1s
	Warm	22.1s
	Cold	29.94s
Accuracy		0.8 m
Min Navigation update rate		1Hz
Dynamics		2g
Operation limits		515 m/sec
A-GPS		Supported

9.2.7 GNSS antenna - Installation guidelines

- The antenna must not be co-located or operating in conjunction with any other antenna or transmitter.
- The antenna must not be installed inside metal cases.

9.2.8 GNSS antenna requirements

The ReliaGATE 10-14 supports an active antenna.

It is recommended to use antennas as follow:

- An external active antenna (17dB typ. Gain, GPS only)
- An external active antenna plus GNSS pre-filter (17dB typ. Gain)

Note: The external GNSS pre-filter is required for the GLONASS application.
The GNSS pre-filter must meet the following requirements:

- **Source and load impedance = 50 Ohm**
- **Insertion loss (1575.42–1576.42 MHz) = 1.4 dB (Max)**
- **Insertion loss (1565.42–1585.42 MHz) = 2.0 dB (Max)**
- **Insertion loss (1597.5515–1605.886 MHz) = 2.0 dB (Max)**

9.2.9 Internal Cellular Modem and GNSS Antennas connectors specifications

Specifications are the same for both the following connectors:

- Main Cellular Antenna Connector
- Diversity Cellular Antenna Connector
- GNSS Antenna Connector

Connector Layout:

Connector Pinout:

Pin #	Description
1	Female inner pin contact
2	Female connector body (outer thread)

Connector Specifications:

- SMA connector
- Gender: Female

Mating Connector Specifications:

- SMA connector
- Gender: Male

9.3 Digital IN/OUT and Analog IN

The ReliaGATE 10-14 provides the following interfaces on the top side:

- 4x Digital Inputs Optoisolated,
- 2x Digital Outputs Optoisolated,
- 2x 11-bit Analog Inputs Isolated

9.3.1 Digital IN/OUT and Analog IN specifications

Digital inputs specifications:

- Optoisolation 1.5kV
- Logic high +2 to 36VDC
- Logic low 0 to +1V
- Input impedance 4K
- Protected internally with 50mA resettable fuse

Digital outputs specifications:

- Isolated to 1.5kV
- Open drain mosfet output, max 36VDC
- Protected with 500mA fuse (not user-serviceable)

Analog inputs specifications:

- Isolated 1.5kV
- 11-bit resolution
- Full scale range 0 to 36VDC
- Input impedance ~100kOhm

9.3.2 Digital IN/OUT and Analog IN connector specifications

Connector Layout:

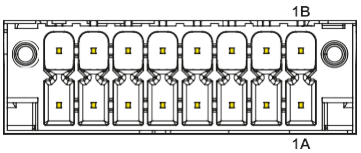

Connector Specifications:

- DMC 1,5/8-G1F-3,5-LR Header
- Gender: Male
- Type: 8*2-pin; 3.5 mm pitch

Mating Connector Specifications:

- DFMC 1,5/ 8-STF-3,5 Housing
- Gender: Female
- Type: 8*2-pin; 3.5 mm pitch
- Example:
  Manufacturer: PHOENIX CONTACT
  Part Number: 1790357
  (or equivalent)

Connector Pinout:

Pin #	Signal	Type	Description
1A	DIN 1+	I	Digital Input 1+
2A	DIN 2+	I	Digital Input 2+
3A	DIN 3+	I	Digital Input 3+
4A	DIN 4+	I	Digital Input 4+
5A	DOUT 1+	O	Digital Output 1+
6A	DOUT 2+	O	Digital Output 2+
7A	AIN1	I	Analog Input 1
8A	AIN2	I	Analog Input 2
1B	DIN 1-	I	Digital Input 1-
2B	DIN 2-	I	Digital Input 2-
3B	DIN 3-	I	Digital Input 3-
4B	DIN 4-	I	Digital Input 4-
5B	DOUT 1-	O	Digital Output 1-
6B	DOUT 2-	O	Digital Output 2-
7B	GND_ISO	P	Ground
8B	GND_ISO	P	Ground

9.4 COM0 and COM 1

The ReliaGATE 10-14 provides 2x RS-232/422/485 protected and isolated serial ports on the top side.

9.4.1 COM0 and COM 1 connector specifications

Connector Layout:

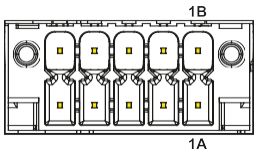

Connector Specifications:
- DMC 1,5/5-G1F-3,5-LR Header
- Gender: Male
- Type: 5*2-pin; 3.5 mm pitch

Mating Connector Specifications:
- DFMC 1,5/ 5-STF-3,5 Housing
- Gender: Female
- Type: 8*2-pin; 3.5 mm pitch
- Example:
  Manufacturer: PHOENIX CONTACT
  Part Number: 1790328
  (or equivalent)

Connector Pinout in RS-232 mode:

Pin #	Port	Signal	Type	Description
1A	COM0	Y1/D1+_TERM	O	TXD1
2A		Z1/D1-_TERM	O	RTS1
3A		GND_ISO	P	Ground Reference
4A		A1_TERM	I	RXD1
5A		B1_TERM	I	CTS1
1B	COM1	Y2/D2+_TERM	O	TXD2
2B		Z2/D2-_TERM	O	RTS2
3B		GND_ISO	P	Ground Reference
4B		A2_TERM	I	RXD2
5B		B2_TERM	I	CTS2

Connector Pinout in RS-422 mode:

Pin #	Port	Signal	Type	Description
1A	COM0	Y1/D1+_TERM	O	Y1(OUT+)
2A		Z1/D1-_TERM	O	Z1(OUT-)
3A		GND_ISO	P	Ground Reference
4A		A1_TERM	I	A1(IN+)
5A		B1_TERM	I	B1(IN-)
1B	COM1	Y2/D2+_TERM	O	Y2(OUT+)
2B		Z2/D2-_TERM	O	Z2(OUT-)
3B		GND_ISO	P	Ground Reference
4B		A2_TERM	I	A2(IN+)
5B		B2_TERM	I	B2(IN-)

Connector Pinout in RS-485 mode
(pins not listed are not connected):

Pin #	Port	Signal	Type	Description
1A	COM0	Y1/D1+_TERM	I/O	D1+
2A		Z1/D1-_TERM	I/O	D1-
3A		GND_ISO	P	Ground Reference
1B	COM1	Y2/D2+_TERM	I/O	D2+
2B		Z2/D2-_TERM	I/O	D2-
3B		GND_ISO	P	Ground Reference

9.5 DisplayPort

The ReliaGATE 10-14 provides a DisplayPort on the bottom side.

9.5.1 DisplayPort connector specifications

Connector Layout:

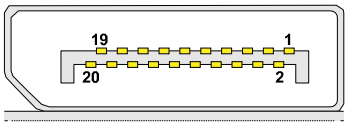

Connector Specifications:

- DisplayPort socket
- Gender: Female

Mating Connector Specifications:

- Cable-Mount DisplayPort plug
- Gender: Male

Connector Pinout:

Pin #	Signal	Type	Description
1	Lane0P	IO	Lane 0 (positive)
2	GND	P	Ground
3	Lane 0N	IO	Lane 0 (negative)
4	Lane1P	IO	Lane 1 (positive)
5	GND	P	Ground
6	Lane 1N	IO	Lane 1 (negative)
7	Lane2P	IO	Lane 2 (positive)
8	GND	P	Ground
9	Lane 2N	IO	Lane 2 (negative)
10	Lane3P	IO	Lane 3 (positive)
11	GND	P	Ground
12	Lane 3N	IO	Lane 3 (negative)
13	CFG1	P	Ground
14	CFG2	P	Ground
15	AUXP	IO	Auxiliary Channel (positive)
16	GND	P	Ground
17	AUXN	IO	Auxiliary Channel (negative)
18	HPD	IO	Hot plug detect
19	RTN_PWR	P	Ground
20	PWR	P	Power for connector

9.6 USB 0 and USB 1

The ReliaGATE 10-14 provides 2x Host 2.0 USB ports (Noise and Surge Protected) for general purpose applications on the bottom side:

- USB 0; max load: 500 mA
- USB 1; max load: 500 mA

9.6.1 USB 0 and USB 1 connectors specifications

Connector Layout:

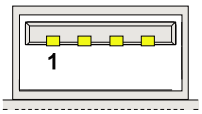

Connector Specifications:

- USB Type-A socket
- Gender: Female

Mating Connector Specifications:

- USB Type-A plug
- Gender: Male

Connector Pinout:

Pin #	Signal	Type	Description
1	V+	P	+5V
2	D-	IO	Data-
3	D+	IO	Data+
4	GND	P	Ground

9.7 ETH 0 and ETH 1

The ReliaGATE 10-14 provides 2x 10/100/1000 Mbps Ethernet ports:

- ETH 0
- ETH 1

The Ethernet connectors are available on the bottom side.

9.7.1 *Ethernet specifications*

Feature	Description
Network Standard	10BASE-Te/100BASE-Tx/1000 BASE-T IEEE 802.3 compliant Supports 1000 BASE-T PCS and auto negotiation with next page support
Speeds	10/100/1000 Mbps Tri-speed
Notes	The interfaces are noise and surge protected. The RJ-45 connector has integrated magnetics.

9.7.2 *ETH 0 and ETH 1 connectors specifications*

Connector Layout:

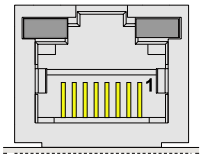

Connector Specifications:

- RJ-45 socket
- Gender: Female

Mating Connector Specifications:

- RJ-45 plug
- Gender: Male

Connector Pinout:

Pin #	Signal	Type	Description
1	TRX0+	IO	Transmit/Receive Data 0+
2	TRX0-	IO	Transmit/Receive Data 0-
3	TRX1+	IO	Transmit/Receive Data 1+
4	TRX2+	IO	Transmit/Receive Data 2+
5	TRX2-	IO	Transmit/Receive Data 2-
6	TRX1-	IO	Transmit/Receive Data 1-
7	TRX3+	IO	Transmit/Receive Data 3+
8	TRX3-	IO	Transmit/Receive Data 3-

LEDs Layout:

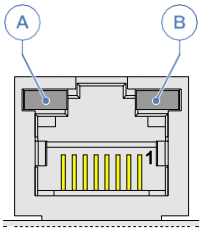

LEDs Meaning:

Ref #	LED Color	LED Meaning
A	Green/Orange	OFF= 10 Mbit Green = 100 Mbit Orange = 1 Gbit
B	Yellow	OFF= Link down ON = Link up (no activity) Blinking = Activity

9.8 Expansion

The ReliaGATE 10-14 provides, on the right side, an expansion connector with the following interfaces:

- USB interface
- I^2S Audio interface
- SPI interface
- Additional GPIO signals
- I^2C interface

For more information see:

- "Right Side Interfaces overview" on page 40

9.8.1 Expansion connector specifications

Connector Layout:

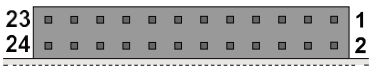

Connector Specifications:

- 2mm dual row R/A header
- Gender: Female
- Type: 12*2-pin; 2.0 mm pitch

Mating Connector Specifications:

- 2mm dual row R/A header
- Gender: Male
- Type: 12*2-pin; 2.0 mm pitch
- Example:
  Manufacturer: Pinrex
  Part Number: 221-92-12GB51
  (or equivalent)

Connector Pinout:

Pin #	Signal	Type	Description
1	VCC 3v3 EXT	P	3.3V/100mA max power supply
2	GND	P	Ground
3	VCC 5v_EXT	P	5V/1A max power supply
4	USB_EXP+	IO	USB data positive
5	USB_EXP-	IO	USB data negative
6	GND	P	Ground
7	SAI_TXFS	O/IO	I2S audio or GPIO
8	SAI_RXD	I/IO	I2S audio or GPIO
9	SAI_TXC	O/IO	I2S audio or GPIO
10	SAI_TXD	O/IO	I2S audio or GPIO
11	GND	P	Ground
12	GPIO_EXP5	IO	GPIO
13	GPIO_EXP4	IO	GPIO
14	GPIO_EXP3	IO	GPIO
15	GPIO_EXP2	IO	GPIO
16	GPIO_EXP1	IO	GPIO
17	GND	P	Ground
18	SPI_MOSI	O/IO	SPI Data OUT or GPIO
19	SPI_CS	O/IO	SPI Chip select or GPIO
20	SPI_MISO	I/IO	SPI Data IN or GPIO
21	SPI_SCLK	O/IO	SPI Clock or GPIO
22	GND	P	Ground
23	I2C_SDA	IO	I2C Data
24	I2C_SCL	O	I2C Clock

9.9 TTL Serial Console

The ReliaGATE 10-14 provides a 3.3 V TTL compatible Serial console in the Service Panel.

The voltage levels are as follows:

- Logic 1 (Hi): 2.0 to 3.3 V
- Logic 0 (Low): 0 to 0.8 V

9.9.1 TTL Serial Console connector specifications

Connector Layout:

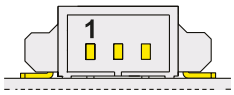

Connector Specifications:

- Shrouded header
- Gender: Male
- Type: Pitch 1.25 mm; 3-pin

Mating Connector Specifications:

- Connector Housing
- Gender: Female
- Type: Pitch 1.25 mm; 3-pin
- Example:
  Manufacturer: Molex
  Part Number: 51021-0300
  (or equivalent)

Connector Pinout:

Pin #	Signal	Type	Description
1	GND	P	Ground
2	TX	O	Transmit Data
3	RX	I	Receive Data

9.10 Earth connection terminal

Always use this terminal to connect the ReliaGATE 10-14 to an earth point in the installation.

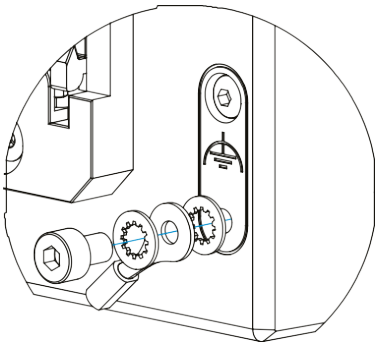

9.11 RTC (Real Time Clock)

The ReliaGATE 10-14 includes the following two RTC (Real Time Clocks) devices:

RTC device	Description	Use
/dev/rtc0	- External (I2C-based RTC device) - Default RTC used by Linux - Accuracy: 25 minutes per year (at 25 °C)	User available
/dev/rtc1	- Internal (in the CPU SoC)	Reserved

9.11.1 The RTC Devices

The ReliaGATE 10-14 includes two Real Time Clocks; however, the internal RTC is not recommended for use in applications.

Three timestamp registers are available, which report:

- The time the RTC changed to battery powered
- The last time the RTC changed to system power
- The last time the tamper detect was triggered

9.11.2 The RTC backup supercap

The ReliaGATE 10-14 includes a non-removable supercap.

The RTC backup supercap can retain the time-stamp for at least 10 days when the ReliaGATE 10-14 is powered OFF.
Note: This is only valid above -25°C; below this value the supercap retention time will be lower.

9.12 Case Intrusion

For more information see "Anti-Tamper Function" on page 41.

The tamper event timestamp registers are exposed through the RTC `/dev/rtc0`

A user-defined script will be called when an intrusion event is detected during runtime, or on boot for an event detected whilst powered off.

9.13 TPM

The ReliaGATE 10-14 includes a TPM 2.0 hardware module: Infineon SLB9670. This is connected to the CPU via an SPI interface.

The TPM can be managed via the 'tpm2_tools' (https://github.com/tpm2-software/tpm2-tools).

9.14 Watchdog

The ReliaGATE 10-14 uses the CPU's internal watchdog to provide a system reset when software becomes unresponsive.

10 THE SOFTWARE

10.1 The Linux OS Distribution

Eurotech provides a Linux distribution based on a Yocto framework, www.yoctoproject.org, as well as an SDK for application development. For more information see: www.yoctoproject.org/documentation.

10.2 Ensure power supply during installation and update

If the system only runs Linux: During installation and update, ensure a reliable source of power for the duration of the install process and for a period of 30 seconds after the first boot.

If the system runs ESF: During installation and update, ensure a reliable source of power for the duration of the install process and for a period of 3 minutes after the first boot.

NOTICE
If the power supply is interrupted prematurely, this may result in a file corruption. **This failure will not be covered under warranty.**

10.3 Docker

Docker is installed in the default Linux image and can be used to create, manage and launch containers. Once installed, the data partition is mounted on `/var/lib/docker` and this is where the docker containers are stored. For more information see: https://docs.docker.com/get-started/

To disable the docker service use the `systemd` service controls:

```
systemctl disable docker
```

After reboot, docker will no longer be running.

10.4 Microsoft IoT Edge

Microsoft IoT Edge can be optionally installed on the ReliaGATE 10-14 using the option `-yes-iotedge` in the installer. This enables the unit to connect to the Microsoft Azure hub.

For more information see: https://docs.microsoft.com/en-us/azure/iot-edge/how-to-install-iot-edge-linux

10.5 System Firewall

By default, the ReliaGATE 10-14 firewall is enabled.

The rules will block all in-bound connections on all ports except for the LAN port (eth0).
On this physical port, the following IP ports are allowed for incoming connections:

- tcp:8000
- udp:67
- udp:53
- tcp:1450
- tcp:80
- tcp:22
- udp:5353.

To disable the system firewall service, complete the following steps:

1. Enter the command

```
systemctl disable iptables
```

2. Reboot the ReliaGATE 10-14 for the setting to take effect.

NOTICE
Running a system without a firewall is not recommended for production systems.

10.6 Partition layout

The partition layout is as follows:

Partition	File System	Size (approximately)	Description
1	FAT	130 MB	Boot Partition. Contains the system boot artifacts.
2	EXT4	2 GB	System A. Entire rootfs + kernel of system A (bootable).
3	EXT4	2 GB	System B. Entire rootfs + kernel of system B (bootable).
4	EXT4	1 GB	Log data. Journal data.
5	EXT4	1.5 GB	Restore partition (not bootable). Contains the compressed factory install image. Also used for configuration data.
6	EXT4	7 GB+	Data. Data partition optionally used for Docker, ESF or customer data.

11 How to access the Administration Console

This section describes how to access the ReliaGATE 10-14 Linux Operating System by logging into the Administration Console.

To login to the Administration Console, use one of the following methods:

- Direct login via Console Port
- Remote login via Secure Shell (SSH)

11.1 Default credentials

By default the system provides two users:

- `guest`
- `root`

The guest password is `eurotech` and it provides non-root privileges.

The root password is set by default to the serial number of the device.

Note: Most users, once logged in as a guest, will elevate to root by running the command `su`

While this will get users to root, it will not run some of the environment scripts that are typically associated with the root user. Specifically, the `.bashrc` file in the root folder sets up various environment variables and paths.
To overcome this, elevate to root using this command `su -l`, where `-l` means log in as root. This will run the scripts associated with the root user.

11.2 How to change the password

For security reasons, Eurotech recommends you change the password of the "root" account after your initial setup.

To change the password, complete the following steps:

1. Login to the Administration Console
2. Run the command `passwd`. You will be prompted to enter your old password for verification, and then a new password.

11.3 Login Messages

Messages can be displayed before and after attempts to access the ReliaGATE 10-14, either via the serial console or using ssh. The default messages discourage unauthorized access but can be changed to suite other scenarios.

The text displayed before a login on the serial console is contained in `/etc/issue`

The text displayed before any access via ssh (including scp) is contained in `/etc/issue.net`

The text displayed after a successful login via ssh or the serial console is contained in `/etc/motd`

11.4 How to login via the Serial Console

The serial console of the ReliaGATE 10-14 is available via a 3.3 Volt serial connection. Because this is not compatible with standard RS-232 voltage levels, you must use an RS-232 to 3.3 Volt converter, or a USB to 3.3 Volt serial adapter.

To login using the Serial Console, complete the following steps:

1. Setup a Development PC (for example: a laptop) with a free USB port
2. Make sure that both the Development PC and the ReliaGATE 10-14 are turned OFF
3. Connect the 3.3 Volt serial-to-USB Cable between the USB port (of the Development PC) and the Serial Console (of the ReliaGATE 10-14)
4. Turn ON both the Development PC and the ReliaGATE 10-14
5. Use the Development PC to login the Administration Console:
    a. Run a terminal emulator such as Tera Term (Windows) or Minicom (Linux)
    b. Configure the serial port connection with these parameters: 115200, 8 bits, 1 stop bit, no parity, no flow control
    c. Enter the default case-sensitive credentials when the prompt appears (see "Default credentials" on the previous page). You should see the following output:

```
root
Password:

root@productname...:~#
```

11.5 How to login via Secure Shell (SSH)

The default (out-of-the-box) network configuration of the ReliaGATE 10-14 is as follows:

- **eth0**
  - Status: Enabled for LAN
  - Configure: Manually (Static IP)
  - IP Address: 172.16.0.1
  - Subnet Mask: 255.255.255.0
  - DHCP Server Enabled
- **eth1**
  - Status: Enabled for WAN
  - Configure: DHCP (DHCP client)
- **wlan0**
  - Status: Disabled

11.5.1 How to login via eth0

To login using eth0, complete the following steps:

1. Ensure that the client PC is using an IP address on the same subnet as eth0 (e.g. 172.16.0.2)
2. Enter the command `ssh root@172.16.0.1`
3. At the prompt, enter the password (see "Default credentials" on page 61).

11.5.2 How to login via eth1

To login using eth1, you need to know its IP address.

By default, the ReliaGATE 10-14 runs a **zeroconf** implementation.
To remotely detect the IP address of the ReliaGATE 10-14, run the following command on your HOST system:

```
avahi-discover
```

Example:

1. Run the command: `avahi-discover`. A dialog box pops-up and reports all the devices on your network that support this scheme
2. In "eth1 IPv4" > "local" > "Workstation", you should see your product's hostname (example: productname_serialnumber)
3. By default, SSH login via eth1 is blocked by the iptables firewall.
   To allow SSH connections on this interface, enter the following command:
   ```
   iptables -A INPUT -i eth1 -p tcp --dport 22 -j ACCEPT
   ```
   To preserve that, add it to the rules that run on start-up:
   ```
   /etc/iptables/iptables.rules
   ```
   Note:
   - **If you are running ESF, then it disables the iptables firewall in favor of its own, so you should adjust the firewall in ESF if required**
   - **While the information above will give you SSH access for development and other useful purposes, consider carefully whether making such a change is a sensible default in a field deployed system.**

(This page has been intentionally left blank)

12 How to use the interfaces in Linux

Interface availability depends on product version.

12.1 General Purpose IO

The ReliaGATE 10-14 offers a number of general purpose IO lines (GPIOs): some provide additional support for other interfaces such as expansion connector power supply control etc, while others provide functionality such as the opto-isolated IO channels, and user LEDs etc which are available for use in application programs.

These GPIO lines are controlled using the **sysfs** filesystem which associates filenames with the various GPIO line functions. The GPIO lines are represented by the following directories:

`/sys/class/gpio/gpioxxx`

where xxx is the number of the associated GPIO line.

Filename	Functions
value	Get or set the value of the GPIO line (can be “0” or “1”)
direction	Get or set the direction (can be “in” or “out”)
active_low	Inverts the GPIO, when set to 1 writing 1 to value sets the GPIO pin to a low voltage level. (can be “0” or “1”)

To read and write to the GPIO line from the command line, use the “cat” and “echo” utilities and enter the following commands:

```
echo 1 >/sys/class/gpio/gpio108/value
```

```
cat /sys/class/gpio/gpio108/value
```

NOTICE

Appropriate values for *direction* and *active_low* are set during system initialization for each GPIO and should not require further alteration.

For details of the other files and subdirectories consult the Linux documentation at:
https://www.kernel.org/doc/Documentation/gpio/sysfs.txt

12.2 How to use the GPIOs: the GPIO Utility

The ReliaGATE 10-14 includes the `gpio_utility` which provides a more convenient way to drive many of the GPIO functions from the command line:

```
gpio_utility pin_name function
```

pin_name It is the required GPIO line in the format `gpioN` or `gpioBank_Pin`.

function It may be set as follows:
- **0 or 1** to set the state of a GPIO output
- **In or Out** to set the direction of a GPIO
- **Unexport** to release the GPIO from **sysfs**(not normally required)

The GPIOs are exported by default at start-up.

12.3 How to drive the LED Indicators

The ReliaGATE 10-14 includes 4 LEDs which are available for use in application programs. These LEDs are provided by GPIO lines which are available through the **sysfs** interface.

The table below shows the GPIO line and color associated with each LED:

LED #	GPIO	Color
1	108	Green
2	109	Green
3	110	Amber
4	111	Amber

EXAMPLES:

To turn ON LED 1, enter the following command:

```
gpio_utility gpio108 1
```

To turn OFF LED 1, enter the following command:

```
gpio_utility gpio108 0
```

To read the status of LED 1, enter the following command:

```
gpio_utility gpio108
```

The current state of the LED is determined by reading the associated GPIO.

The output is as follows:
- If LED 1 is ON, then `gpio108` = 1
- If LED 1 is OFF, then `gpio108` = 0

For more information see: "General Purpose IO" on the previous page.

12.4 How to use the Digital I/Os

The ReliaGATE 10-14 includes 4 opto-isolated inputs and 2 opto-isolated outputs. These IOs are provided by GPIO lines which are available through the **sysfs** interface.

The table below shows the GPIO line associated with each IO:

IO Line #	GPIO
Dig In1	106
Dig In2	107
Dig In3	96
Dig In4	97
Dig Out1	42
Dig Out2	43

EXAMPLES:

To turn ON Dig Out1, enter the following command:

```
gpio_utility gpio42 1
```

To read the status of Dig In1, enter the following command:

```
gpio_utility gpio106
```

For more information see: "General Purpose IO" on page 65.

NOTICE

Never try to change the directions associated with the Digital IO lines.

These are set during initialization of the system and damage may occur if they are set incorrectly.

12.5 Analog Inputs

The ReliaGATE 10-14 includes two analog-to-digital converters (ADCs) which are available for use in application programs. The two ADC inputs are isolated from the ReliaGATE 10-14 power supply but share a common ground with each other and with the serial ports.

Each channel uses a 12-bit differential converter with the -ve input tied to ground giving an 11-bit input resolution. The full scale of ADC is set to 4096mV or 2mV per bit. An input divider chain of 1/8.86 is also included giving an input voltage rage of 0 to 36.3 volts.

Linux drivers are included which provide an IIO interface within the **sysfs** file system. Each ADC appears as a directory containing various files which allow access to the functionality of each device.

ADC #	Sysfs directory name
ADC 1	/sys/bus/iio/devices/iio:device0
ADC 2	/sys/bus/iio/devices/iio:device1

The ADC value is obtained by reading the **in_voltage0-voltage1_raw** file.

To read ADC 1, enter the enter the following command:

```
cat /sys/bus/iio/devices/iio:device0/in_voltage0-voltage1_raw
```

Each ADC inputs includes a voltage divider chain which allows higher input voltages to be measured as shown in this simplified diagram:

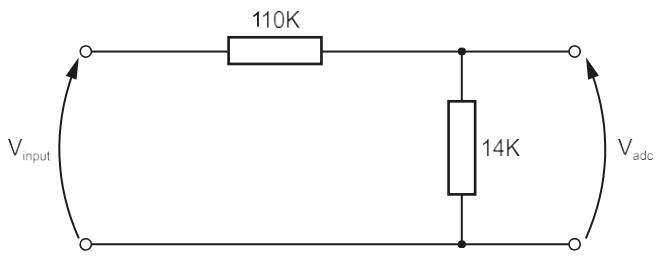

The voltage applied to the ADC is:

$$\mathbf{V_{adc}} = \frac{\mathbf{V_{input}}}{\mathbf{110 + 14}} \times \mathbf{14}$$

The input sensitivity of the ADC is set to 2mV per bit:

$$\mathbf{V_{adc}} = \mathbf{ADC_{reading}} \times \mathbf{2}$$

$$\mathbf{ADC_{reading}} \times \mathbf{2} = \frac{\mathbf{V_{input}}}{\mathbf{110 + 14}} \times \mathbf{14}$$

Rearranging gives:

$$\mathbf{V_{input}} = \mathbf{ADC_{reading}} \times \mathbf{2} \times \frac{\mathbf{124}}{\mathbf{14}}$$

12.6 How to use the Serial ports

The ReliaGATE 10-14 includes two serial ports which are available for use by application programs. Each port may be configured for RS-232, RS-422 or RS-485 operation, and is driven with standard Linux serial port drivers.
Software selectable termination resistors are also available for use in high baud rate, RS-422 & RS-485 applications

The serial ports can be accessed using the following device names.

- COM port 0 (RS-232/422/485): `/dev/ttymxc0`
- COM port 1 (RS-232/422/485): `/dev/ttymxc1`

The serial ports share a multi-function line driver which allows for numerous combinations of RS-232, RS-422 and RS-485 between the two serial ports; however, some combinations are not supported.
The table below shows the available combinations:

Combinations	COM 1 in RS-232	COM 1 in RS-422	COM 1 in RS-485	COM 1 in HiZ	COM 1 in Loop
COM 0 in RS-232	✓	✓	✓		
COM 0 in RS-422		✓			
COM 0 in RS-485			✓		
COM 0 in HiZ				✓	
COM 0 in Loop					✓

NOTICE

At start-up, the line drivers remain in the high impedance state to prevent interference with other connected devices. Before using a port, set its mode by using *ethsetserial* or the serial mode library

12.6.1 Termination and Bias Resistors

Termination resistors are used to reduce reflections when long cables are used at high baud rates. Reflections can significantly reduce the signal level and introduce ‘dead spots’ increasing the system’s susceptibility to noise and reduce reliability.

To avoid reflections a resistor which matches the impedance of the cable (approx. 120 ohms for twisted pairs) should be placed across the ends of the cable. The ReliaGATE 10-14 includes 120 ohm terminating resistors which should be enabled through software if the device is connected to the end of the cable.

In RS-485 systems there are times when all the line drivers are disabled, and the D+ and D- signals are either floating or pulled together by the terminating resistors. Most modern RS-485 receivers (including those on the ReliaGATE 10-14) are designed to cope with this condition but some legacy devices may see this as a break condition or start to oscillate. In these situations, a pull-up resistor between the D+ line and +5V and between the D- line and 0V should be used to bias the lines to a ‘1’ state.

12.6.2 How to configure the COM port mode

The COM port mode can be configured in the following ways:

- From the command line (using the Eurotech ethsetserial utility)
- From an application program (using the Eurotech set serial mode API).

12.6.2.1 Configuring the COM port mode from the command line (using the Eurotech ethsetserial utility)

The **ethsetserial** utility provides a simple was to configure a COM port mode from the command line or from within a shell script, and provides the following options

Option	Description	Available values
-h	Display some help text	-
-m	Set the required mode	232, 422, or 485
-r	State of driver control line after transmission (RS-485)	0 or 1
-s	State of driver control line before transmission (RS-485)	0 or 1
-b	Delay in mS before start of transmission (RS-485)	0 to 100
-a	Delay in mS after end of transmission (RS-485)	0 to 100
-p	Name of the port to be configured	/dev/ttymxcN
-d	Display the current settings for the given port	-
-t	Enable the terminating resistors for the given port	0 or 1

The -r and -s options allow the level of the line driver output enable pin both during and after transmission in RS-485 mode to be overridden in special circumstances. During normal operation, these options should not be specified in which case the driver selects the appropriate values.

The -b -a options allows a delay in ms to be specified before the start and after the end of transmission in RS-485 mode. For the REGATE-10-14 both these values should either not be specified or set to 0.

The -t option allows the termination resistors to be enabled or disabled when in RS-422 or RS-485 mode. Setting the mode to RS-232 automatically disables the termination resistor. Do not specify -t along with -m 232.

To set COM port 1 to RS-232 mode, enter the following command:

```
ethsetserial -p /dev/ttymxc1 -m232
```

To set COM port 1 to RS-422 mode, enter the following command:

```
ethsetserial -p /dev/ttymxc1 -m422
```

To set COM port 1 to RS-485 mode, enter the following command:

```
ethsetserial -p /dev/ttymxc1 -m485
```

To display current mode of COM port 1, enter the following command:

```
ethsetserial -p /dev/ttymxc1 -d
```

12.6.2.2 Configuring the COM port mode from an application program (using the Eurotech set serial mode API)

The SDK for the REGATE-10-14 includes a library that allows the mode of the serial port to be controlled directly from a C or C++ application.

To use this library, complete the following steps:

1. Include the following header in the application source file

```
#include <ethserialmode.h>
```

2. Link the application with the libethserialmode.so library file

```
gcc main.c -lethserialmode
```

The library uses the following structure defined in **ethserialmode.h** to pass and return information:

```
struct _eth_serial_mode {
   int mode;
   int terminator;
   int state_after;
   int delay_after;
   int delay_before;
   int state_during;
};
```

mode	Specifies the mode. It may be one of the following values defined in ethsetserial.h RS232_MODE, RS422_MODE, or RS485_MODE.
terminator	Specifies the state of the line termination resistors, and may be zero (disabled) or non zero (enabled) .
state-after	Specifies the state of the line driver enable after a transmission is completed and may be one of the following values defined in ethsetserial.h RTS_AUTO, RTS_HI, RTS_LOW.
state-during	Specified the state of the line driver enable during a transmission and may be one of the following constants defined in ethsetserial.h RTS_AUTO, RTS_HI, RTS_LOW .
delay-before	Specifies the delay in mS between the line driver being enabled and the start of the first character. NB not used in the ReliaGATE 10-14 and should be set to 0.
delay-after	Specifies the delay in mS between the end of the last character and the line driver being disabled. NB not used in the ReliaGATE 10-14 and should be set to 0.

The following functions are available:

int _eth_SetSerialMode(int fd, struct _eth_serial_mode *mode)

Sets the mode of the serial port
fd: an open file descriptor for the required serial port
mode: pointer to a structure containing the required mode details

Returns 0 on success or -1 on error (errno contains the corresponding error code)

int _eth_GetSerialMode(int fd, struct _eth_serial_mode *mode)

Reads the mode of the serial port
fd: an open file descriptor for the required serial port
mode: pointer to a structure populated with detailes of the current mode.
The values of state_during and state_after will reflect the actual values, even if RTS_ AUTO was specified in a previous call to _eth_SetSerialMode()

Returns 0 on success or -1 on error (errno contains the corresponding error code)

const char * _eth_SerialModeName(int mode)

mode: Integer representing the mode

Returns a zero terminated string describing the given mode

The example below set COM1 to RS-422 with terminators off then transmits ‘hello’:

```
#include <stdio.h>
#include <fcntl.h>
#include <unistd.h>
#include <sys/stat.h>
#include <sys/types.h>
#include <ethserialmode.h>

int main(int argc, char *argv[])
{
    int fd;
    struct _eth_serial_mode mode;

    mode.terminator = 0;
    mode.delay_after = 0;
    mode.delay_before = 0;
    mode.mode = RS422_MODE;
    mode.state_after = RTS_AUTO;
    mode.state_during = RTS_AUTO;

    fd = open("/dev/ttymxc1", O_RDWR);
    if(fd != -1)
    {
        if(_eth_SetSerialMode(fd, &mode) == 0)
            write(fd, "hello", 5);
        else
            perror("Unable to set mode: ");
        close(fd);
    }
    else
        perror("Unable to open port: ");
    return 0;
}
```

12.7 How to use the Internal Cellular Modem

The ReliaGATE 10-14 supports the Telit LE910C1family of LTE cellular modems:

Product version	Modem variant	Technology
-35	Telit LE910C1-NF - North America	LTE Cat 1 3G Fallback
-36	Telit LE910C1-EU - Europe	LTE Cat 1 2G/3G Fallback
-37	Telit LE910C1-AP - Japan	LTE Cat 1 3G Fallback

The modem initialization is handled by a **systemd** service `setup-modem`.

Before using the modem:

1. **Select the MiniSIM card holder to use**
2. **Refer to the Telit LE910Cx AT command reference guide for a full list of modem AT commands and example usage.**

12.7.1 How to select the MiniSIM card holder to use

To confirm SIM card is present, enter the following command:

```
telit-he910 is_sim_present
```

The expected answer is:

```
SIM found
```

To select the top card holder (the default value), enter the following command:

```
telit-he910 chat AT#SIMSELECT=1
```

To select the bottom card holder, enter the following commands:

```
telit-he910 chat AT#ENSIM2=1
telit-he910 chat AT#SIMSELECT=2
```

The value of the active SIM card is stored in a non-volatile memory, therefore the same SIM card remains active even after a power cycle of the system.

12.7.2 Note for LE910C1-NF1 Modem: AT&T / Verizon firmware support

The LE910C1-NF1 modem supports both AT&T and Verizon firmware.

The firmware used by the modem needs to be set the first time the modem is used. Once the modem firmware has been set, the same firmware will load on each modem reset.

A firmware switch between the two modem firmware versions can be performed during operation.

With dual SIM usage on the ReliaGATE 10-14 it is possible to load both an AT&T and a Verizon SIM into the card holders, and then switch between Verizon and AT&T firmware and their respective SIM cards to provided coverage on either network. Due to the firmware switch, simultaneous operation is not possible.

AT&T / Verizon firmware selection is performed using an AT command. This loads the respective AT&T / Verizon firmware, resets the modem, and then re-enumerates the device on the bus.

Note: Allow 20 seconds from the execution of the command before sending further AT commands to allow the device to be re-enumerates on the USB bus.

12.7.2.1 How to select the AT&T firmware

To select the AT&T firmware, use the following command:

```
telit-he910 chat 'AT#FWSWITCH=0,1'
```

12.7.2.2 How to select the Verizon firmware

To select the Verizon firmware, use the following command:

```
telit-he910 chat 'AT#FWSWITCH=1,1'
```

12.7.3 How to disable/enable the diversity (CELL DIV) function

To disable the diversity function, use the following command:

```
AT#RXDIV=0
```

The value set by the command is directly stored in the modem NVM; it will be available at next power ON.

To enable the diversity function, use the following command:

```
AT#RXDIV=1
```

The value set by the command is directly stored in the modem NVM; it will be available at next power ON.

12.8 Wi-Fi Regulatory Domain

By default the ReliaGATE 10-14 is shipped with the global regulatory domain set, this will allow it to function in most countries. However, to optimize it for the Wi-Fi domain if and when the final deployment location is known, the domain should be modified to match the deployment location.

To modify the domain, set the regdom argument in the environment.

Example:
To set the regulatory domain for the United States, complete the following steps:

1. Run the following command sequence:

```
echo 0 > /sys/block/mmcblk0boot1/force_ro ; fw_setenv regdom 'cfg80211.ieee80211_
regdom=US' ; fw_printenv regdom ;
```

2. Reboot for the settings to take effect.

Note #1: You must set the regulatory domain for 5GHz Wi-Fi to work.

Note #2: Failure to set the regulatory domain results in lots of crda error messages being reported. For example:

```
Feb 08 09:38:26 reliagate-10-14 systemd-udevd[5854]: Process '/usr/sbin/crda' failed with
exit code 255.
Feb 08 09:38:30 reliagate-10-14 systemd-udevd[5861]: Process '/usr/sbin/crda' failed with
exit code 255.
```

12.9 How to read the programmable pushbutton status

The ReliaGATE 10-14 includes a push button which is available for use in application programs. The Push Button is provided by a GPIO line which is available through the **sysfs** interface.

The Push Button is connected to GPIO 80.

To read the programmable pushbutton status, enter the following command:

```
cat /sys/class/gpio/gpio80/value
```

The output is as follows:

- If the button is pushed, then `value` = 1
- If the button is not pushed, then `value` = 0.

12.10 The Ignition Key

The ReliaGATE 10-14 includes an ignition monitoring circuit which can be used in battery-operated applications. Whilst the ignition input is low, the ReliaGATE 10-14 is powered OFF, saving the battery.

The Ignition Key is a digital input that enables the product to be turned ON/OFF according to the following operating principle:

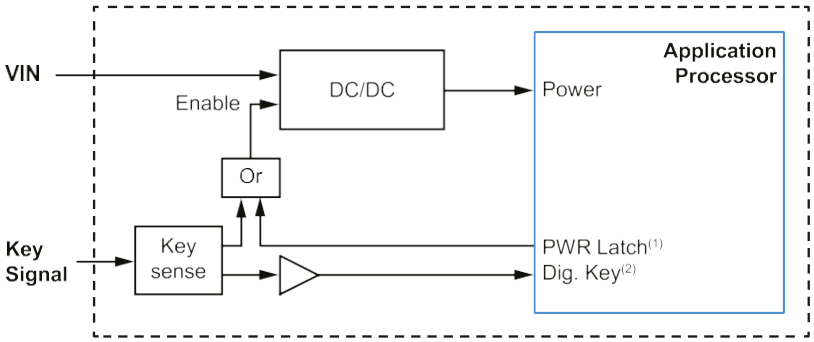

(1)PWR Latch: Power Latch control signal from logic for a safe shutdown
(2)Dig. Key: Digital information of Ignition Key presence

A DIP-switch (SW# 1) in the Service Panel allows control the Ignition Key control functionality.

For more information see:

- "DIP-switches meaning" on page 44
- "How to turn OFF the product" on page 87

SW# 1	Ignition Key Status	Key Signal Level	Product Status
ON	From OFF (GND) to ON (VIN+)	Rising edge	The product turns ON
ON	From ON (VIN+) to OFF (GND)	Falling edge	The product turns OFF after 120 seconds (default condition)
OFF	-	-	Product turns ON when power is applied and OFF when power is removed

Two GPIO lines are used to interface with the ignition monitor:

ignition_input Reflects the state of the Ignition Input pin on the power connector.

ignition_latch When enabled, prevents the ReliaGATE 10-14 from powering OFF immediately when **ignition_input** goes OFF.
ignition_latch is enabled by default.

The table below shows the GPIO line associated with each IO:

Line	GPIO	Link Name
ignition_input	123	/dev/ign_input
ignition_latch	109	/dev/ign_latch

12.10.1 Ignition monitoring service

The ignition monitoring service calls a script when a change is detected.

The default script, located in `/usr/bin/ignition_script.sh`, initiates a controlled shutdown but this can be changed as required.

The ignition monitoring service is disabled by default but can be enabled with the commands:

```
systemctl enable ignitionmon
```

```
systemctl start ignitionmon
```

Once enabled, the `ignitionmon` service will then automatically run each time the ReliaGATE 10-14 is restarted.

12.11 Timestamps and Tamper Detect

The ReliaGATE 10-14 is equipped with anti-tamper detection: when the Service Panel (or the case) is opened, the intrusion event is timestamped and recorded by the RTC.
The intrusion detection is active even when the device is not powered while the RTC backup supercap remains charged.
If the supercap fully discharges when the device is turned OFF, all stored timestamps will be lost.

The RTC offers 3 timestamps:

- Timestamp1: captures the most recent tamper detection event
- Timestamp2: captures the last time the RTC switched to battery backup (power OFF)
- Timestamp3: captures the last time the RTC switched to main power (power ON).

To read the value of the Tamper timestamp registers, enter the following commands:

```
cat  /sys/class/rtc/rtc0/device/timestamp1
cat  /sys/class/rtc/rtc0/device/timestamp2
cat /sys/class/rtc/rtc0/device/timestamp3
```

Example:

```
root@reliagate-10-14:~# cat /sys/class/rtc/rtc0/device/timestamp1
yyyy/mm/dd hh:mm:ss Event
2020/04/07 13:04:49 Last TS event

root@reliagate-10-14:~# cat /sys/class/rtc/rtc0/device/timestamp2
yyyy/mm/dd hh:mm:ss Event
2020/04/07 13:23:25 Last switch to battery

root@reliagate-10-14:~# cat /sys/class/rtc/rtc0/device/timestamp3
yyyy/mm/dd hh:mm:ss Event
2020/04/07 13:24:00 Last switch to Vdd
```

12.11.1 Tamper event system service

The ReliaGATE 10-14 also includes a system service which will run a script when a tamper event is detected. This service is enabled by default.

To disable the system service, enter the following commands:

```
systemctl disable tampermon
systemctl stop tampermon
```

The service monitors the tamper detect and calls an action script each time a new event is detected. The action script is located in `/usr/bin/tamper_script.sh`

The default script issues a warning message to all users but that can be modified to suite different situations. The script is called with the following parameters:

Parameter 1	The date of the last tamper event formatted as YYYY/MM/DD
Parameter 2	The time of the last tamper event formatted as hh:mm:ss

After the script is called, the tamper status is automatically reset but the time of the last tamper event is still available from `/sys/class/rtc/rtc0/ device/timestamp1`

The default poll rate for the tamper detection service is once every 15 seconds. The poll rate can be changed by modifying the monitor script.

To change the poll rate, complete the following steps:

1. Modify the monitor script in `/usr/bin/tampermond.sh`
2. Change the POLL_RATE variable near the top of the file.

12.12 How to output Accelerometer and Gyroscope values

The ReliaGATE 10-14 includes a 3D digital accelerometer / 3D digital gyroscope:

- The accelerometer is exposed as `cat/sys/bus/iio/devices/iio\:device2`
- The gyroscope is exposed as `cat /sys/bus/iio/devices/iio\:device3`

To output the three-dimensional values for the accelerometer, use the following commands:

```
watch -n 1 cat /sys/bus/iio/devices/iio\:device2/in_accel_x_raw
watch -n 1 cat /sys/bus/iio/devices/iio\:device2/in_accel_y_raw
watch -n 1 cat/sys/bus/iio/devices/iio\:device2/in_accel_z_raw
```

To output the three-dimensional values for the gyroscope, use the following commands:

```
watch -n 1 cat /sys/bus/iio/devices/iio\:device3/in_anglvel_x_raw
watch -n 1 cat /sys/bus/iio/devices/iio\:device3/in_anglvel_y_raw
watch -n 1 cat/sys/bus/iio/devices/iio\:device3/in_anglvel_z_raw
```

12.13 How to read the RTC

To read the RTC, enter the following commands:

```
cat /sys/class/rtc/rtc0/device/rtc/rtc0/time
```

or

```
hwclock
```

12.14 How to read the Internal Temperature

The ReliaGATE 10-14 is provided with sensors that measure:

- The CPU thermal zone
- The on-board Temperature

To read the CPU thermal zone, enter the following command:

```
cat /sys/devices/virtual/thermal/thermal_zone0/temp
```

To read the on-board Temperature, enter the following command:

```
cat/sys/class/hwmon/hwmon0/temp1_input
```

12.15 How to use the Watchdog

The ReliaGATE 10-14 uses the processor's internal watchdog to reset the system if the software stops responding.
Once triggered, the watchdog must be written to within a configurable timeout period to prevent the system reset.

The watchdog appears at `/dev/watchdog`.

Use the **wdctl** utility to change the watchdog timeout.

NOTICE
The watchdog performs an immediate reset without any attempt to shut down the system cleanly. It should only be used as a last resort as this type of reset may lead to data loss and file system corruption.

12.15.1 How to start/stop the Watchdog from the command line

To start and feed the watchdog, enter the following command:

```
echo 1 > /dev/watchdog
```

To disable the watchdog, enter the following command:

```
echo V > /dev/watchdog
```

12.15.2 For more information

For more information on Linux support for watchdog, see:

https://www.kernel.org/doc/html/latest/watchdog/watchdog-api.html

12.16 How to read the CPU Unique ID

The CPU of the REGATE-10-14 incorporates a unique ID.

To read the UID, enter the following command:

```
# cat /sys/devices/soc0/soc_uid
```

Example of output: `1F371A09DAB43D19`

12.17 User-programmable pushbutton: factory restore

The ReliaGATE 10-14 features a user-programmable pushbutton that by default activates a factory restore functionality. This functionality restores the ReliaGATE 10-14 from a failed state.

NOTICE
The restore operation erases all user data and configuration: use it with caution.

12.17.1 How the restore mode works

The ReliaGATE 10-14 contains a copy of the factory image which can be applied to the file-system to revert it to the factory configuration. The gateway uses a dual-root file-system scheme and during the reset operation, it applies the factory image to the inactive file-system and marks it as primary.

Once the reset operation completes successfully, the gateway is automatically rebooted from the partition that has been restored to factory settings.

To support multiple scenarios and provide flexibility for additional ones, the recovery mechanism uses restore “modes” to setup recovery to best support the use case.
The ReliaGATE 10-14 currently supports these restore modes:

Restore Mode	Description
1 (default)	When the reset pushbutton is pressed, restores the inactive file-system to factory default
2	When the reset pushbutton is pressed, reboots from the secondary file-system and restores the primary file-system to factory default
3	When the reset pushbutton is pressed **during boot**, reboots from the secondary file-system and restores the primary file-system to factory default

To view and set a specific restore mode, use the following command:

```
eurotech_restore_mode
```

To disable the factory restore functionality, use the following commands:

```
eurotech_restore_mode 1
systemctl disable eurotech-restore
```

12.17.2 How to use the user-programmable pushbutton for other applications

To use the user-programmable pushbutton for other applications, disable the factory restore functionality. The pushbutton is now available as a GPIO Input line: GPIO 80.

To read the user-programmable pushbutton status, enter the following command:

```
gpio_utility gpio80
```

The output is as follows:

- If the button is pushed, then `gpio80` = 1
- If the button is not pushed, then `gpio80` = 0.

For more information see:"General Purpose IO" on page 65.

13 MECHANICAL SPECIFICATIONS

13.1 Product mechanical dimensions

The product electronics are housed in an aluminum alloy enclosure having the following dimensions: 107 (L) x 85 (W) x 46 (H); mm - Antennas Connectors and Mounting Bracket excluded.

All dimensions are in millimeters.

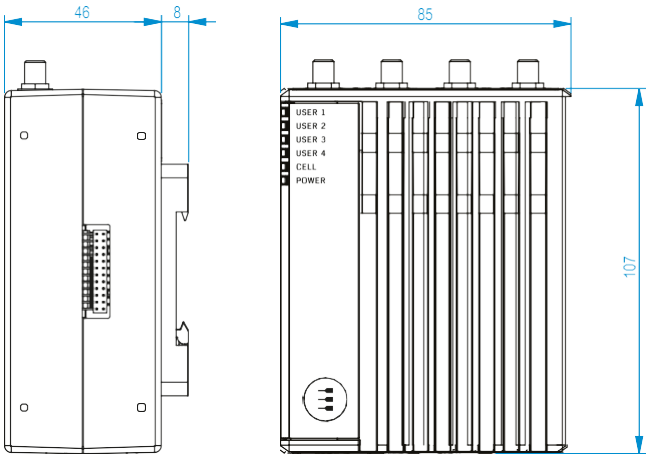

(This page has been intentionally left blank)

14 How to install the product

The product is intended for professional use and must be installed by qualified personnel only.

The product must be installed in a secured location, accessible to authorized personnel only (for example in a cabinet / technical compartment).

NOTICE
Always use the Earth connection terminal to connect the ReliaGATE 10-14 to an earth point in the installation. **For more information see: "Earth connection terminal" on page 57**

The ReliaGATE 10-14 comes with a DIN rail mounting bracket placed on the rear side.
Optionally, the ReliaGATE 10-14 can come with the DIN rail mounting bracket placed on the right side; in this configuration the Expansion connector is not available.

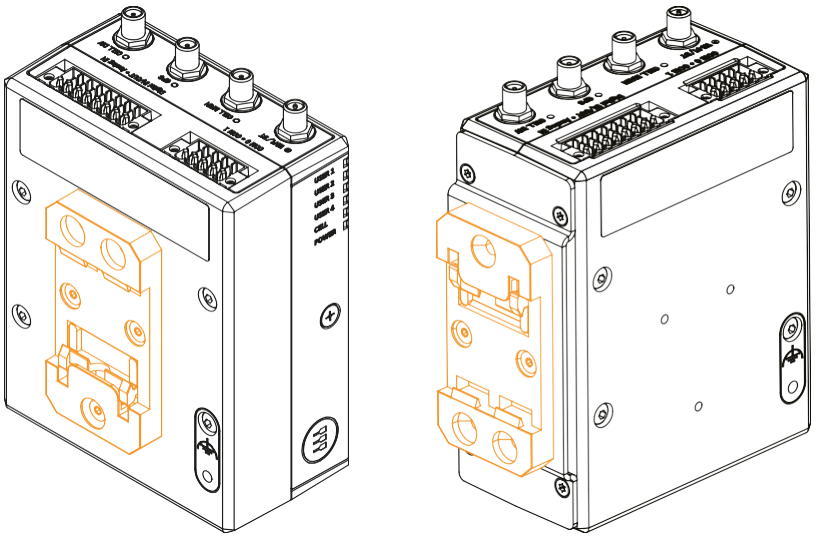

14.1 How to install the product on a DIN Rail

Prerequisite: Make sure that the DIN rail is placed horizontally.

To install the product on a horizontal DIN rail, complete the following steps:

1. Position the product so that the lower side of the mounting bracket hooks on the lower edge of the DIN rail, see step 1
2. Push the product upwards against the DIN rail until the upper hooked side of the mounting bracket locks on the upper edge of the DIN rail, see step 2. The product is now installed on the DIN rail.

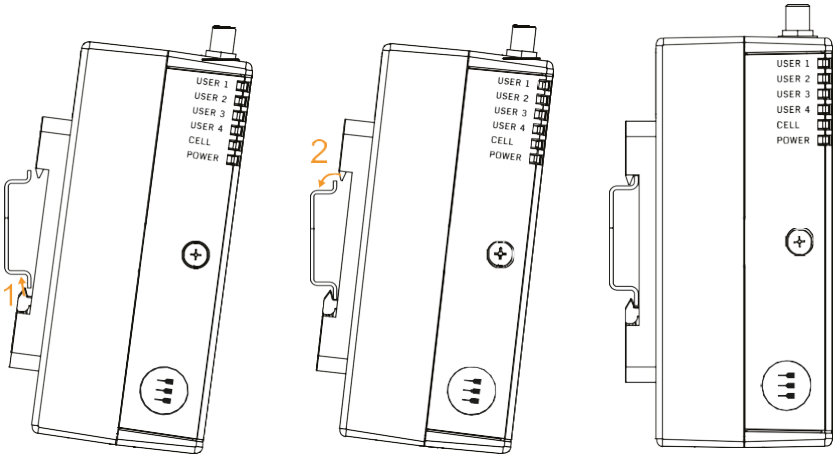

15 POWER SUPPLY. HOW TO TURN ON/OFF AND RESET THE PRODUCT

This product is not provided with any ON/OFF switch.
The Power IN connector is the disconnecting means from the power supply network.

15.1 Power supply specifications

Power Supply	Nominal: 12 or 24 VDC; Range: 9 to 30 VDC with transient protection
Power Consumption	25 W typical
Transient Voltage	1500 V peak

15.2 Power IN connector specifications

The power input is protected against: surge, noise, reverse polarity, over-voltage.

NOTICE
The Power IN connector is NOT protected against short circuit. **Always include an external fuse to protect the product!**

The ReliaGATE 10-14 provides the Power IN connector on the bottom side.

Connector Layout:

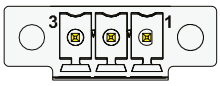

Connector Specifications:
- Base strip, Header
- Gender: Male
- Type: 3-pin, 3.5 mm pitch

Mating Connector Specifications:
- Pluggable screw terminal block
- Gender: Female
- Type: 3-pin, 3.5 mm pitch
- Example:
  Manufacturer: Phoenix Contact
  Part Number: MC 1,5/ 3-STF-3,5 - 1847068
  (or equivalent)

Connector Pinout:

Pin #	Signal	Type	Description
1	Power IN +	P	Positive power supply input
2	Power IN -	P	Negative power supply input
3	KEY	P	Key Signal

15.3 How to supply power and turn ON the product

WARNING

ELECTRIC SHOCK HAZARD

Failure to supply power correctly or to follow all operating instructions correctly, may create an electric shock hazard, which could result in personal injury or loss of life, and / or damage the equipment or other property.

To avoid injuries and safely supply power to the product, complete the following steps:

1. **Observe all the instructions for safety, installation, and operation**
2. **Make sure your hands are dry**
3. **Make sure that all the cables to use:**
   a. **Are in good condition**
   b. **Meet the product requirements and comply with the relevant standards and regulations**
4. **Position cables with care. Do not position cables in places where they may be trampled or compressed**
5. **Make sure that the power-points and plugs are in good condition before using them**
6. **Do not overload the power-points and plugs**
7. **Make sure that the product maintains a proper grounding connection. Always use the earth protection terminal to connect the ReliaGATE 10-14 to an earth point in the installation: see also "Earth connection terminal" on page 57**
8. **Use a power supply that meets the product requirements and complies with the relevant standards and regulations. In case of uncertainties, contact the Eurotech Technical Support Team (for more information see "How to receive technical assistance" on page 17)**
9. **Connect power after the installation of the system has been completed**
10. **Never connect or disconnect the cables with the system or the external apparatus switched ON.**

Before supplying power to the product, complete the following steps:

1. **Make sure that you have thoroughly reviewed all installation, operation, and safety instructions**
2. **Make sure that the electrical installation is made correctly in compliance with the relevant standards and regulations.**

To supply power and turn ON the ReliaGATE 10-14, complete the following steps:

1. Setup a DC power source that:
   - Meets the ReliaGATE 10-14 power requirements
   - Delivers minimum power of 25W
2. Check the input voltage as close as possible to the Power IN connector. This is to compensate for any cable losses, caused by cable length and other cable characteristics
3. **Make sure that the DC power source is turned OFF**
4. Setup an external Type F fuse on the line coming from the negative terminal of the DC power source (a 2A Type F fuse is appropriate for 24VDC operation)
5. Connect the DC power source terminals to the Power IN connector:
   - "Power IN +" to Pin 1
   - "Power IN -" to Pin 2

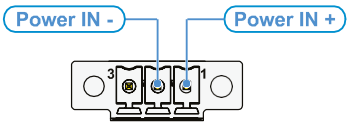

6. Turn ON the DC power source. The ReliaGATE 10-14 remains OFF

7. Connect Pin 3 (Key Signal) to "Power IN +".
   The ReliaGATE 10-14 automatically turns ON and the LED 6 (POWER) turns ON

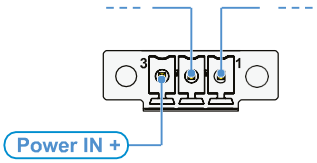

NOTICE
When connecting Pin 3 to "Power IN +", keep it connected for at least 10 seconds. If you disconnect "Power VIN +" from the Pin 3 before 10 seconds have passed, the start-up procedure will not be completed correctly and an immediate and unsafe power down will occur.

8. To keep the ReliaGATE 10-14 turned ON, make sure that Pin 3 keeps connected to "Power VIN +".

15.4 How to turn OFF the product

There two ways of turning OFF the product according to the status of the DIP-switch SW# 1 in the Service Panel:

- If SW# 1 is ON: to turn OFF the ReliaGATE 10-14, follow these steps:
  1. Disconnect the KEY pin from Power IN +. The ReliaGATE 10-14 performs a safe shut down
  2. Remove the power from the Power IN connector.
- If SW# 1 is OFF: to turn OFF the ReliaGATE 10-14:
  - Remove the power from the Power IN connector.

For more information see:

- "DIP-switches meaning" on page 44
- "The Ignition Key" on page 75

15.5 How to reduce the power consumption of the product

To reduce the power consumption of the ReliaGATE 10-14, turn OFF the radio interfaces and disable unnecessary services that contribute to overall system power consumption.

15.6 How to hardware reset the product

To trigger a hardware reset of the ReliaGATE 10-14, push the hardware reset pushbutton available in the Service Panel.

(This page has been intentionally left blank)

16 HOW TO MAINTAIN THE PRODUCT

Periodically inspect the product to verify its integrity and to ensure proper operation.

To maintain the product, complete the following steps:

1. Carefully read and understand the instructions contained in the section "Safety instructions" on page 9
2. Safely remove the power supply
3. Verify the installation of the product
4. Clean the product

16.1 How to safely remove the power supply

WARNING

ELECTRIC SHOCK HAZARD

Failure to remove power correctly may create an electric shock hazard, which could result in personal injury or loss of life, and / or damage the equipment or other property.
To avoid injuries and safely remove power supply from the product, complete the following steps:

1. **Make sure your hands are dry**
2. **Turn OFF all the power supply sources**
3. **Disconnect all cables apart from the earth connection terminal**
4. **Make sure that all the circuits are discharged**
5. **Disconnect the earth connection terminal.**

16.2 How to verify the installation of the product

To verify the installation of the product, complete the following steps:

1. Verify that the product is clean and not damaged
2. Verify that the LED indicators are visible and not damaged
3. Verify that all the locking parts (for example: screws, bolts, nuts) are correctly fastened
4. Verify that the product is installed correctly.

16.3 How to clean the product

To clean the product, complete the following steps:

1. Never use detergents, aerosol sprays, solvents or abrasive sponges
2. To remove dust from the case of the product, use a dry, lint-free, cloth
3. To remove the dirt, use water-based, non-flammable, cleaner products.

(This page has been intentionally left blank)

17 How to decommission the product

NOTICE

The decommissioning of the product erases the storage device, leaving only the bootloader. This process is not reversible.

However the product can be re-installed and re-used if required.

The product supports a decommissioning feature that wipes the OS including sensitive configuration data as well as full erase of the ESF data and log partitions.

Decommissioning is carried out by the bootloader if the decommission flag in the bootloader environment has been read at boot. The flag can be set from either the bootloader OR from user space.

To decommission the product, enter the following commands:

```
# Make environment writable
echo 0 > /sys/block/mmcblk0boot1/force_ro

# Set the flag
fw_setenv decommission 1

# Make environment read-only
echo 1 > /sys/block/mmcblk0boot1/force_ro
```

On the next reboot, the storage device will be erased leaving only the bootloader.

(This page has been intentionally left blank)

NOTES

EUROTECH

EUROTECH.COM

HEADQUARTERS

Via Fratelli Solari, 3/a
33020 Amaro (UD) - Italy
Tel: +39 0433.485.411
Fax: +39 0433.485.499
Email: welcome@eurotech.com
Web: www.eurotech.com

For your Eurotech local contact refer to: **eurotech.com/contacts**

For the Eurotech Global Support Centre refer to: **support.eurotech.com**

For the Eurotech Download Area refer to: **eurotech.com/download**

All trademarks, registered trademarks, logos, trade names and products names contained in this document are the property of their respective owners.