EUROTECH
Imagine. Build. Succeed.

User manual

DynaGATE 10-12

Automotive IoT Edge Gateway TI AM335x, LTE Cat 1

Rev. 0-14 — 31 October 2018 — DYGATE-10-12_UserMan_ENG_0-14 — ENGLISH

Trademarks

All trademarks, registered trademarks, logos, trade names and products names contained in this document are the property of their respective owners.

Intended audience of this document

This document is intended for system integrators: skilled persons with a thorough knowledge in linking together different computing systems and software applications physically or functionally, to operate as a coordinated whole, in compliance with the applicable regulations.

Revision history

Revision	Description	Date
0-14	Preliminary release	31 October 2018

© 2018 Eurotech SpA - Via Fratelli Solari 3/A - 33020 AMARO (UD) - Italy

CONTENTS

Trademarks ... 2
Intended audience of this document ... 2
Revision history ... 2

Contents ... **3**

1 Safety instructions ... **7**
1.1 Safety messages ... 7
1.1.1 Safety messages for hazards with a high level of risk ... *7*
1.1.2 Safety messages for hazards with a medium level of risk ... *8*
1.1.3 Safety messages for hazards with a low level of risk ... *8*
1.2 Other messages ... 8
1.2.1 Instructions on how to use the product effectively and avoid any damage ... *8*
1.3 Preventing electrostatic discharge ... 9
1.4 Safely connecting power to the product ... 9
1.5 Wireless safety information ... 9
1.6 Caution: Product's surfaces may become hot ... 9

2 Receiving technical assistance ... **11**
2.1 Asking for technical support ... 11
2.2 Sending a product for repair ... 11

3 Conventions ... **13**
3.1 Conventions for signal names ... 13
3.2 Conventions for signal types ... 13

4 Getting started ... **15**

5 Product overview ... **17**
5.1 Product description ... 17
5.2 Intended use and not allowed uses of the product ... 18
5.2.1 Intended use ... *18*
5.2.2 Not allowed uses ... *18*
5.3 Technical specifications ... 19
5.4 Product labels ... 21

6 Norms and certifications ... **23**
6.1 CE marking ... 23
6.2 Directive RED 2014/53/EU ... 23
6.2.1 Modification statement ... *23*
6.3 FCC marking ... 23
6.4 FCC/ISED regulatory notices ... 23
6.4.1 Modification statement ... *23*
6.4.2 ISED Canada Regulatory Notices ... *23*
6.4.3 RF radiation exposure statement ... *24*
6.4.4 FCC Class B digital device notice ... *25*
6.4.5 ISED Class B digital device notice ... *25*
6.4.6 Labeling information ... *25*
6.5 Restrictions on 5 GHz Wi-Fi usage ... 26
6.5.1 EU Restrictions on 5 GHz Wi-Fi Usage ... *26*
6.5.2 FCC Restrictions on 5 GHz Wi-Fi Usage ... *26*
6.6 Antennas list ... 27
6.7 RoHS 3 compliance ... 27
6.8 WEEE compliance ... 27

7 Interfaces overview **29**
7.1 Front side overview 29
7.2 Rear side overview 30
7.2.1 Service Panel interfaces *31*
7.3 Right side overview 32
7.4 Left side overview 33
7.5 LED indicators overview 34

8 Interfaces in detail **35**
8.1 Wi-Fi and Bluetooth (only for versions: -X2, -X5, -X6, -X7) 35
8.1.1 Wi-Fi specifications *35*
8.1.1.1 2.4 GHZ TX output power 35
8.1.1.2 5 GHZ TX output power 35
8.1.2 Bluetooth specifications *36*
8.1.3 BLE specifications *36*
8.1.4 Wi-Fi and Bluetooth antennas connectors specifications *36*
8.2 Internal mobile connectivity (only for versions: -X3, -X4, -X5, -X6, -X7) 37
8.2.1 Internal modem specifications (according to product versions) *37*
8.2.1.1 Product features 37
8.2.1.2 LTE data 37
8.2.1.3 Supported bands 37
8.2.1.4 TX output power 37
8.2.1.5 Main antenna requirements 38
8.2.1.6 Second antenna requirements (for antenna diversity) 39
8.2.2 Internal mobile antennas connectors specifications *40*
8.3 The MicroSIM card receptacles 41
8.3.1 How to insert / remove the MicroSIM card *41*
8.3.1.1 If you are using the receptacle on the top side of the circuit board 41
8.3.1.2 If you are using the receptacle on the bottom side of the circuit board 42
8.4 Internal GNSS 43
8.4.1 Internal GNSS specifications *43*
8.4.2 Internal GNSS antenna connector specifications *43*
8.5 Digital I/Os 44
8.5.1 Insulated Digital Inputs *44*
8.5.1.1 Electrical specifications 44
8.5.1.2 Electrical schematics 44
8.5.2 Insulated Digital Outputs *45*
8.5.2.1 Electrical specifications 45
8.5.2.2 Electrical schematics 45
8.5.3 Digital I/Os connector specifications *45*
8.6 COM ports 0 and 1 for DynaGATE 10-12-XY with X ≤ 3 46
8.6.1 Note for termination resistors (only for RS-485 mode) *46*
8.6.2 Note for fail safe resistors (only for RS-485 mode) *46*
8.6.2.1 Switches meaning 46
8.6.3 COM connector specifications *47*
8.7 COM ports 0 and 1 for DynaGATE 10-12-XY with X ≥ 4 48
8.7.1 Note for termination resistors (only for COM 1 in RS-485 mode) *48*
8.7.2 Note for fail safe resistors (only for COM 1 for RS-485 mode) *48*
8.7.2.1 Switches meaning 48
8.7.3 COM connector specifications *49*
8.7.4 Note for RS-485 Half Duplex (only for COM 0 in RS-485 mode) *49*
8.8 CAN ports 0 and 1 50
8.8.1 CAN 0/1 connector specifications *50*
8.9 Ethernet ETH 0 and 1 51
8.9.1 Ethernet specifications *51*
8.9.2 ETH 0/1 connectors specifications *51*

8.10 Host USB ports 52
8.10.1 USB 0/1/2 connectors specifications 52
8.11 Expansion connector 53
8.11.1 Expansion connector specifications 53
8.12 TTL Serial console 54
8.12.1 TTL Serial console connector specifications 54
8.13 The MicroSD card receptacle 55
8.13.1 How to insert / remove the MicroSD card in the receptacle 55
8.14 RTC (Real Time Clock) 56
8.14.1 The RTC device "/dev/rtc1" 56
8.14.2 The RTC backup supercap 56
8.15 Watchdog 56
8.16 Accelerometer 56
8.17 The Programmable pushbutton 56
8.18 TPM 56

9 How to supply power to the product 57
9.1 Power supply specifications 57
9.1.1 Power IN connector and mating connector specifications 57
9.2 How to supply power and turn ON the product 58
9.3 How to turn OFF the product 59
9.4 How to reduce the power consumption of the product 59
9.5 How to perform a hardware reset of the product 59

10 The Software 61
10.1 The Linux OS distribution 61
10.2 The bootloader procedure 61
10.2.1 How to select the MLO source 61
10.2.2 How to set up a correct MicroSD card / eMMC card partition 61

11 How to access interfaces under Linux 63
11.1 How to drive the GPIOs: the GPIO utility 63
11.2 How to determine the Operating System version installed 64
11.3 Memory and storage devices 64
11.4 Wi-Fi and Bluetooth 64
11.5 ReliaCELL (optional) 64
11.6 Cellular modem 65
11.6.1 How to select the MicroSIM slot to use 65
11.6.2 Note for LE910-NA1 cellular modem: AT&T / Verizon firmware support 65
11.6.2.1 How to select the AT&T firmware 65
11.6.2.2 How to select the Verizon firmware 66
11.7 GNSS 67
11.8 CAN ports 68
11.8.1 How to enable the CAN bus 5V 68
11.8.2 How to setup a CAN port 68
11.8.3 How to send/receive a message via a CAN port 68
11.9 COM ports 0 and 1, Console port 69
11.9.1 How to set the RS-232/485 modes 69
11.9.1.1 How to use the ethsetserial utility to configure the COM ports 69
11.9.1.2 How to implement the ioctl in the source code to configure the COM ports 70
11.9.2 How to test a serial port 72
11.10 Digital I/Os 73
11.11 LED indicators 73
11.12 Vehicle Ignition Sense 73
11.13 Ethernet ports 73
11.14 How to enable the 3.3V and 5V power supply on expansion connector 74

11.15 RTC 75
11.16 Watchdog 76
11.16.1 How to manage the watchdog using the C programming language 76
11.16.2 How to manage the watchdog from the command line 76
11.16.3 For further information 77
11.17 Accelerometer 77
11.18 Internal temperature sensor 78
11.19 The Programmable pushbutton 78
11.20 TPM 78

12 How to log in the Administration Console 79
12.1 The default credentials 79
12.2 How to login using the Console port 79
12.3 How to login via Secure Shell (SSH) 79
12.3.1 How to login via the eth0 port 79
12.3.2 How to login via the eth1 port 80
12.4 How to change your security settings 80

13 How to compile custom software 81
13.1 How to set up the toolchain 81
13.2 How to use the toolchain to compile custom software 81

14 Eurotech Everyware IoT 83
14.1 Everyware Software Framework (ESF) 83
14.2 The ESF Web UI 84
14.3 The ESF Wires Application 85
14.4 Everyware Cloud (EC) 86
14.5 For further information 86

15 Mechanical specifications 87
15.1 Product mechanical dimensions 87

16 How to install the product 89
16.1 Comply with safety instructions, norms and certifications 89
16.2 How to install the product using the integrated Mounting Bracket 89

17 How to maintain the product 91
17.1 How to prevent electrostatic discharge 91
17.2 How to safely remove the power supply 91
17.3 How to verify the installation of the product 91
17.4 How to clean the product 91

Notes 93

1 SAFETY INSTRUCTIONS

IMPORTANT: Read carefully and understand the instructions and warnings contained in this document before installing / using the product. Keep this document for future reference.

To lower the risk of personal injury, electric shock, fire or damage to equipment, observe the instructions and warnings contained in this document.

Failure to comply with the instructions and warnings contained this document, violates the standards of safety, design, manufacture, and intended use of the product.

Eurotech assume no liability for any damage caused by failure to observe the instructions and warnings contained this document.

Whenever you have any doubt regarding the correct understanding of this document, contact the Eurotech Technical Support (for more information see "Receiving technical assistance" on page 11).

1.1 Safety messages

1.1.1 Safety messages for hazards with a high level of risk

To indicate a hazard with a high level of risk which, if not avoided, **will result in death or serious injury**, the following safety message is used; the message also contains the safety instructions to follow to avoid any hazard:

DANGER

WARNING SIGN

TEXT THAT EXPLAINS THE SOURCE OF THE HAZARD (WRITTEN WITH BOLD UPPER-CASE CHARACTERS)

Text with the safety instructions to follow to avoid any hazard (written with bold lower-case characters)

Example:

DANGER

HIGH VOLTAGE INSIDE.
CONTACT WILL CAUSE ELECTRIC SHOCK OR BURN.

Turn OFF and disconnect power before opening the rack.

1.1.2 *Safety messages for hazards with a medium level of risk*

To indicate a hazard with a medium level of risk which, if not avoided, **could result in death or serious injury**, the following safety message is used; the message also contains the safety instructions to follow to avoid any hazard:

⚠ **WARNING**	
WARNING SIGN	**TEXT THAT EXPLAINS THE SOURCE OF THE HAZARD (WRITTEN WITH BOLD UPPER-CASE CHARACTERS)** **Text with the safety instructions to follow to avoid any hazard (written with bold lower-case characters)**

1.1.3 *Safety messages for hazards with a low level of risk*

To indicate a hazard with a low level of risk which, if not avoided, **could result in minor or moderate injury**, the following safety message is used; the message also contains the safety instructions to follow to avoid any hazard:

⚠ **CAUTION**	
WARNING SIGN	**TEXT THAT EXPLAINS THE SOURCE OF THE HAZARD (WRITTEN WITH BOLD UPPER-CASE CHARACTERS)** **Text with the safety instructions to follow to avoid any hazard (written with bold lower-case characters)**

1.2 Other messages

1.2.1 *Instructions on how to use the product effectively and avoid any damage*

To indicate:

- Instructions on how to use the product effectively
- Instructions on how to avoid damaging the product or third-party property (not related to personal injury),

the following message is used:

NOTICE	
SIGN if necessary	**Text with the instructions to follow to complete the specific task (written with bold characters).**

1.3 Preventing electrostatic discharge

NOTICE

HOW TO PREVENT DAMAGING ELECTROSTATIC-SENSITIVE DEVICES

The symbol on the left is applied on electrostatic-sensitive devices.

To prevent damaging electrostatic-sensitive devices:

- **Handle the electrostatic-sensitive devices in an ESD Protected Area (EPA)**
- **Observe the appropriate antistatic precautions. For example: use a wrist strap kept in constant contact with bare skin and attached to ground.**

1.4 Safely connecting power to the product

To safely connect power to the product:

- **Observe all the instructions for safety, installation, and operation**
- **Never operate with wet hands**
- **Use certified power cables**
- **Make sure the power cables are not damaged before using them**
- **Make sure that the power cables meet the power requirements of the devices**
- **Position cables with care. Do not position cables in places where they may be trampled or compressed by objects placed on them**
- **Make sure that the power-points and plugs are not damaged before using them**
- **Do not overload the power-points and plugs**
- **Use a power supply that meets the requirements stated on the identification label of the product. In case of uncertainties about the required power supply, contact the Eurotech Technical Support Team (for more information see "Receiving technical assistance" on page 11).**

1.5 Wireless safety information

The antennas used in the product have to be installed with care in order to avoid any interference with other electronic devices and to guarantee a minimum distance from the body (20 cm).

In case of this requirement cannot be satisfied, the system integrator has to assess the final product against the SAR regulations.

1.6 Caution: Product's surfaces may become hot

Depending on the operating environment temperature, product's surfaces may become hot, creating a burn hazard.

Always allow the product's surfaces to cool before touching them.

(This page has been intentionally left blank)

2 RECEIVING TECHNICAL ASSISTANCE

2.1 Asking for technical support

To ask for technical support, complete the following steps

1. Go to the Eurotech Global Support Centre: https://support.eurotech.com/
2. Submit a support request
3. Wait for the reply from the Support Team with the information you required

2.2 Sending a product for repair

To send a product for repair, complete the following steps:

1. Go to the Eurotech Global Support Centre: https://support.eurotech.com/
2. Submit an RMA request
3. Wait for the reply from the RMA Department. It will contain:
    - The RMA number
    - The shipping information
4. Pack the product adequately using anti-static material and place it in a sturdy box with enough packing material to protect it from shocks and vibrations
5. Ship the product to Eurotech following the information received from the RMA Department.

NOTICE
Any product returned to Eurotech, that is found to be damaged due to inadequate packaging, will not be covered by the warranty.

(This page has been intentionally left blank)

3 CONVENTIONS

3.1 Conventions for signal names

Convention	Description
GND	Ground
#	Active low signal
+	Positive signal; Positive signal in differential pair
-	Negative signal; Negative signal in differential pair
3.3	3.3 V signal level
5	5 V signal level
NC	No Connection
Reserved	Use is reserved to Eurotech

3.2 Conventions for signal types

Convention	Description
I	Signal is an input to the system
O	Signal is an output from the system
IO	Signal may be input or output
P	Power and Ground
A	Analog signal
NC	No Connection
Reserved	Use is reserved to Eurotech

(This page has been intentionally left blank)

4 GETTING STARTED

To get started with the DynaGATE 10-12, follow these steps:

1. **Know the DynaGATE 10-12 interfaces.**

   The DynaGATE 10-12 provides connectivity to several wired and wireless interfaces.
   For further information, see:
   - "Product overview" on page 17
   - "Technical specifications" on page 19
   - "Interfaces overview" on page 29
   - "Interfaces in detail" on page 35

2. **Supply power to the DynaGATE 10-12.**

   Supply power to the DynaGATE 10-12 correctly, respecting all the safety instructions.
   For further information, see "How to supply power to the product" on page 57

3. **Log into the Administration console.**

   The DynaGATE 10-12 runs a Linux distribution based on a Yocto framework and supports login via a variety of methods.
   For further information, see:
   - "The Software" on page 61
   - "How to log in the Administration Console" on page 79
   - "How to access interfaces under Linux" on page 63

4. **Start developing your applications.**

   The DynaGATE 10-12 supports ESF, which is an inclusive software framework that puts a middleware layer between the operating system and the OEM application.
   For detailed instructions, and sample applications for developing device applications using ESF on Eurotech platforms, see: http://esf.eurotech.com/docs.

5. **Install the DynaGATE 10-12.**

   The DynaGATE 10-12 is lightweight, compact, and easy to install.
   For further information, see:
   - "Mechanical specifications" on page 87
   - "How to install the product" on page 89

6. **Maintain the DynaGATE 10-12.**

   Periodic maintenance of the DynaGATE 10-12 ensures greater integrity and reliable operation.
   For further information, see:
   - "How to maintain the product" on page 91

(This page has been intentionally left blank)

5 PRODUCT OVERVIEW

5.1 Product description

The DynaGATE 10-12 is a family of IoT Edge Gateways designed to deliver LTE connectivity with 2G/3G fallback to automotive and lightly rugged applications.

The DynaGATE 10-12 is based on the TI AM335x Cortex-A8 (Sitara) processor family, with 1GB of RAM, 4GB of eMMC and user-accessible MicroSD and dual Micro-SIM slots.

The DynaGATE 10-12 features a wide range of connectivity capabilities[1]: it can integrate an internal LTE Cat 1 modem with dual Micro-SIM support, Wi-Fi, Bluetooth Low Energy, and two Fast Ethernet ports; an internal GNSS provides precise geolocation capabilities.

All interfaces are suitable for applications with a high level of shock and vibration: front panel USB ports feature high retention connectors and all other signals are delivered by locking connectors or screw-flange terminal blocks.

For further details visit www.eurotech.com.

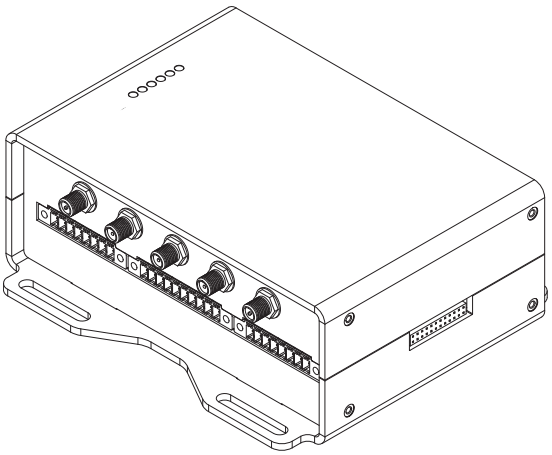

Figure 5.1 - Example of DynaGATE 10-12, front side

[1] The features availability depends on the product versions

5.2 Intended use and not allowed uses of the product

NOTICE
Install this product in a secured location, only accessible to authorized personnel (for example in a cabinet / technical compartment). **This product is intended for professional use and must only be installed by qualified personnel.**

5.2.1 Intended use

The DynaGATE 10-12 is a family of IoT Edge Gateways designed to deliver LTE connectivity with 2G/3G fallback to automotive and lightly rugged applications.

The DynaGATE 10-12 must:

- Be installed in a secured location, only accessible to authorized personnel (for example in a cabinet / technical compartment), and not exposed to atmospheric agents
- Be used indoors or in automotive applications*
- Be used with appropriate interconnecting and power cables
- Be used with an external DC power supply source that:
    - Must meet the requirements stated on the identification label of the product
    - Must deliver a maximum current of 2 A
    - Must include an external 2 A fuse on the line coming from the negative terminal
- Include an external 2 A fuse on the line coming from the negative terminal of the DC power source.

* Before using the DynaGATE 10-12, versions: -X2, -X5, -X6, in automotive applications in any EU Member State, switch-off the Wi-Fi band: 5150 - 5350 MHz.

5.2.2 Not allowed uses

Do not use the DynaGATE 10-12:

- In railway applications
- In defence applications
- In industrial applications
- In safety-critical applications
- In environments with potentially explosive atmospheres
- If not installed according to the instructions and warnings contained in this document.

When used in automotive applications in any EU Member State, do not use the DynaGATE 10-12, versions: -X2, -X5, -X6, with the Wi-Fi band: 5150 - 5350 MHz enabled.

5.3 Technical specifications

The DynaGATE 10-12 is available in several versions: from DynaGATE 10-12-X1 to DynaGATE 10-12-X7; for example DynaGATE 10-12-53.

They have the following specifications, according to the respective versions:

Specifications		Description according to DynaGATE 10-12-XY versions						
		-X1	-X2	-X3	-X4	-X5	-X6	-X7
Processor	**CPU**	TI AM3352, 1 GHz, 1 Core						
Memory	**RAM**	1 GB, DDR3						
Storage	**Embedded**	4 GB eMMC						
	Other	1x MicroSD slot (user accessible)						
I/O interfaces	**Ethernet**	2x Fast Ethernet on RJ45 connectors						
	USB	3x Host 2.0 (noise and surge protected) on Type A connectors (front panel: high retention)						
	Serial	X ≤ 3 → 2x RS-232/485: COM 0/1; Surge protected, RS-485 termination and fail-safe resistors (Default: RS-232) 1x TTL Serial Console X ≥ 4 → 1x RS-422/485: COM 0; Surge protected, Insulated, Full / Half Duplex (Default: RS-422 Full Duplex*) 1x RS-232/485: COM 1; Surge protected, RS-485 termination and fail-safe resistors (Default: RS-232) 1x TTL Serial Console *Factory Option: RS-485 Half Duplex set as default (RS-422 mode no longer available)						
	CAN 2.0B	2x CAN bus with 5V (100mA) Power Out						
	Digital I/O	2x Digital Input: 36 V, 1 kV Optoinsulated 2x Digital Output: 40 V AC/DC, 1 kV Optoinsulated, 500 mA, 1 kHz Max Switching						
	Expansion	Yes, for Side Expansion Modules						
Radio interfaces	**Internal Mobile**	No		LTE Cat 1 (NA) 3G Fallback	LTE Cat 1 (EU) 2G Fallback	LTE Cat 1 (NA) 3G Fallback	LTE Cat 1 (EU) 2G Fallback	LTE Cat 1 (JP)
	External Mobile	Optional Accessory: ReliaCELL 10-20 (3G/4G)						
	GNSS	X ≤ 3 → Internal; 72 channels GPS, Galileo, GLONASS, BeiDou X ≥ 4 → Internal Untethered Dead Reckoning; 72 channels GPS, Galileo, GLONASS, BeiDou						
	Wi-Fi/BT	No	802.11a,b,g,n/ BLE 4.2	No		802.11a,b,g,n/ BLE 4.2		
	Antennas (external)	1x SMA GNSS	1x SMA GNSS, 2x RP-SMA Wi-Fi/BT	1x SMA GNSS, 2x SMA Mobile Conn.		1x SMA GNSS, 2x SMA Mobile Conn., 2x RP-SMA Wi-Fi/BT		
Other	**RTC**	Yes (backup supercap)						
	Watchdog	Yes (system level)						
	TPM	X ≤ 3 → Factory Option X ≥ 4 → TPM 2.0						
	Accel/Gyro	X ≤ 3 → Accelerometer X ≥ 4 → Accelerometer and Gyroscope						
	Sensors	Temperature (inside the product)						

Specifications		Description according to DynaGATE 10-12-XY versions						
		-X1	-X2	-X3	-X4	-X5	-X6	-X7
	LEDs	1x Power, 1x Mobile Connectivity, 4x Programmable						
	Buttons	1x Reset, 1x Programmable						
	SIM slot	No		2x Micro-SIM (user accessible)				
Power	**Input**	Nominal: 12 or 24 VDC; Range: 9 to 36 VDC with transient protection and Vehicle Ignition Sense						
	Consumption	2 W typical; 15 W maximum						
Environment	**Operating Temp.**	-40 to +85 °C						
	Storage Temp.	-40 to +85 °C						
Certifications	**Regulatory**	FCC, ISED, CE		FCC, ISED	CE	FCC, ISED	CE	JATE, TELEC
	Safety	EN 62368-1:2014+A11:2017						
	Vertical	E-Mark,SAE/J1455						
	Environmental	RoHS2; REACH						
	Wi-Fi/BT Radio	No	FCC, ISED, CE	FCC, ISED	CE	FCC, ISED	CE	JATE, TELEC
	Mobile Radio	No	No	FCC, ISED, PTCRB (AT&T, Verizon)	CE	FCC, ISED, PTCRB (AT&T, Verizon)	CE	JATE, TELEC, (NTT DoCoMo)
	Ingress	IP20						
	MTBF	> 290.000 h (prediction method: IEC 62380 @ 25°C GF)						
Mechanical	**Enclosure**	Material: Aluminium - Color: Aluminium						
	Dimensions	139 (L) x 118 (W) x 52 (H); mm - Antennas Connectors and Mounting Bracket included						
	Weight	450 g						
Operating System		X = 0 or 4 → No Operating system X = 1 or 5 → Yocto Linux* X = 3 or 6 → Yocto Linux* + ESF * Factory Option: Secure Boot - Yocto Linux						

5.4 Product labels

The following label is placed on the product:

Label example	Label type and content	Label position
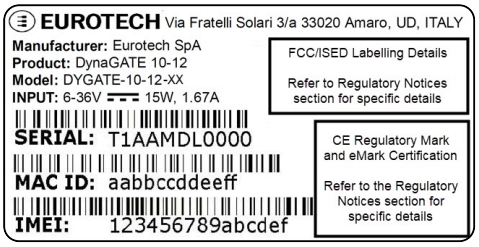	**Part Number and Serial Number Label** • Eurotech logo • Manufacturer name • Manufacturer address (only for EU versions) • Product number • Model number (xx = product version) • Power supply specifications* • Serial number • MAC ID number • IMEI number • FCC information (NA versions only) • ISED information (NA versions only) • E-Mark information (EU versions only) • CE mark (EU versions only) • WEEE symbol (EU versions only)	On the underside of the product

* the symbol ⎓ stands for direct current

(This page has been intentionally left blank)

6 NORMS AND CERTIFICATIONS

6.1 CE marking

Some versions of the product described in this document are CE marked; for further information see "Technical specifications" on page 19.
Eurotech is not responsible for the use of this product together with equipment (for example: power supplies, personal computers, etc.) that are not CE marked and not compliant with the requirements specified in this document.

6.2 Directive RED 2014/53/EU

This product meets the requirements of the Directive 2014/53/EU of the European Parliament and of the Council of 16 April 2014 on the harmonization of the laws of the Member States relating to the making available on the market of radio equipment.

6.2.1 Modification statement

Eurotech has not approved any changes or modifications to this product by the user. Any changes or modifications could void the user's authority to operate the product.

6.3 FCC marking

Some versions of the product described in this document are FCC marked; for further information see "Technical specifications" on page 19.

Eurotech is not responsible for the use of this product together with equipment (for example: power supplies, personal computers, etc.) that are not FCC marked and not compliant with the requirements specified in this document.

6.4 FCC/ISED regulatory notices

6.4.1 Modification statement

Eurotech has not approved any changes or modifications to this product by the user. Any changes or modifications could void the user's authority to operate the product.

Eurotech n'approuve aucune modification apportée à l'appareil par l'utilisateur, quelle qu'en soit la nature. Tout changement ou modification peuvent annuler le droit d'utilisation de l'appareil par l'utilisateur.

6.4.2 ISED Canada Regulatory Notices

This device contains licence-exempt transmitter(s)/receiver(s) that comply with Innovation, Science and Economic Development Canada's licence-exempt RSS(s). Operation is subject to the following two conditions:

1. This device may not cause interference.
2. This device must accept any interference, including interference that may cause undesired operation of the device.

L'émetteur/récepteur exempt de licence contenu dans le présent appareil est conforme aux CNR d'Innovation, Sciences et Développement économique Canada applicables aux appareils radio exempts de licence. L'exploitation est autorisée aux deux conditions suivantes:

1. *L'appareil ne doit pas produire de brouillage;*
2. *L'appareil doit accepter tout brouillage radioélectrique subi, même si le brouillage est susceptible d'en compromettre le fonctionnement.*

This radio transmitter 21442-MRG1012 has been approved by Innovation, Science and Economic Development Canada to operate with the antenna types listed below, with the maximum permissible gain indicated. Antenna types not included in this list that have a gain greater than the maximum gain indicated for any type listed are strictly prohibited for use with this device.

Le présent émetteur radio 21442-MRG1012 a été approuvé par Innovation, Sciences et Développement économique Canada pour fonctionner avec les types d'antenne énumérés ci dessous et ayant un gain admissible maximal. Les types d'antenne non inclus dans cette liste, et dont le gain est supérieur au gain maximal indiqué pour tout type figurant sur la liste, sont strictement interdits pour l'exploitation de l'émetteur.

Antenna Types *Types d'antenne*	Frequency Band *Bande de fréquences*	Antenna Gain *Gain de l'antenne*
Cellular **50Ω Dipole**	700 MHz 850 MHz 1700 MHz 1900 MHz	6.63 dBi 6.63 dBi 6.00 dBi 8.51 dBi
Wi-Fi / Bluetooth **50Ω Dipole**	2.5 GHz Wi-Fi 802.11a,b,g,n / BLE 4.2 BLE Bluetooth 5 GHz Wi-Fi 802.11a,b,g,n	5.47 dBi 7.07 dBi

The ReliaGATE 10-12 has been certified with the following antennas:

Le ReliaGATE 10-12 a été certifié avec les antennes suivantes:

Antenna Types *Types d'antenne*	Frequency Band *Bande de fréquences*	Antenna Gain *Gain de l'antenne*
Cellular **50Ω Dipole**	• Taoglas GSA.8827.A101111 • Taoglas MA.950.W.A.LBICG.005	
Wi-Fi / Bluetooth **50Ω Dipole**	• Linx Technologies ANT-DB1-RAF-RPS • Taoglas MA.950.W.A.LBICG.005	**Taoglas MA.950:** Certified operation: • 2.4GHz/5.8GHz MIMO_1 antenna is interfaced to 2.4GHz WiFi/Bluetooth RP-SMA • 2.4GHz/5.8GHz MIMO_2 antenna is interfaced to 5GHz WiFi RP-SMA *Opération certifiée:* • L'antenne 2.4GHz/5.8GHz MIMO_1 est connectée au RP-SMA WiFi / Bluetooth à 2,4 GHz • L'antenne 2.4GHz/5.8GHz MIMO_2 est connectée au RP-SMA WiFi 5 GHz

6.4.3 *RF radiation exposure statement*

This product complies with FCC and ISED radiation exposure limits set forth for an uncontrolled environment. The antenna should be installed and operated with minimum distance of 20 cm between the radiator and your body.

Cet appareil est conforme aux limites d'exposition aux rayonnements de l'ISED pour un environnement non contrôlé. L'antenne doit être installé de façon à garder une distance minimale de 20 centimètres entre la source de rayonnements et votre corps.

This device and its antenna(s) must not be co-located or operating in conjunction with any other antenna or transmitter except in accordance with FCC multi-transmitter product procedures.

Cet appareil et son (ses) antenne(s) ne doivent pas être co-localisés ou utilisés en conjonction avec une autre antenne ou un autre émetteur, sauf en conformité avec les procédures du produit multi-émetteur de la FCC.

6.4.4 FCC Class B digital device notice

This device complies with part 15 of the FCC Rules. Operation is subject to the following two conditions:

1. This device may not cause harmful interference, and
2. This device must accept any interference received, including interference that may cause undesired operation.

Note: This equipment has been tested and found to comply with the limits for a Class B digital device, pursuant to part 15 of the FCC Rules. These limits are designed to provide reasonable protection against harmful interference in a residential installation. This product generates, uses and can radiate radio frequency energy and, if not installed and used in accordance with the instructions, may cause harmful interference to radio communications. However, there is no guarantee that interference will not occur in a particular installation. If this product does cause harmful interference to radio or television reception, which can be determined by turning the product OFF and ON, the user is encouraged to try to correct the interference by one or more of the following measures:

- Reorient or relocate the receiving antenna
- Increase the separation between the product and the receiver
- Connect the product into an outlet on a circuit different from that to which the receiver is connected
- Consult the dealer or an experienced radio/TV technician for help

6.4.5 ISED Class B digital device notice

ICES-003 Class B Notice - Avis NMB-003, Classe B.

This Class B digital apparatus complies with Canadian ICES-003.

Cet appareil numérique de la classe B est conforme à la norme NMB-003 du Canada.

6.4.6 Labeling information

The following information is stated on the product labels:

- Contains FCC ID: RI7LE910NAV2
- Contains FCC ID: UKMMRG1012
- Contains IC ID: 5131A-LE910NAV2
- Contains IC ID: 21442-MRG1012
- CAN ICES-3 (B)/NMB-3(B)

6.5 Restrictions on 5 GHz Wi-Fi usage

Channel Number	Frequency (MHz)	Europe (ETSI)	North America (FCC)
36	5180	Indoor Usage Only	Indoor Usage Only
40	5200	Indoor Usage Only	Indoor Usage Only
44	5220	Indoor Usage Only	Indoor Usage Only
48	5240	Indoor Usage Only	Indoor Usage Only
52	5260	Not Supported	Not Supported
56	5280	Not Supported	Not Supported
60	5300	Not Supported	Not Supported
64	5320	Not Supported	Not Supported
100	5500	Not Supported	Not Supported
104	5520	Not Supported	Not Supported
108	5540	Not Supported	Not Supported
112	5560	Not Supported	Not Supported
116	5580	Not Supported	Not Supported
120	5600	Not Supported	Not Supported
124	5620	Not Supported	Not Supported
128	5640	Not Supported	Not Supported
132	5660	Not Supported	Not Supported
136	5680	Not Supported	Not Supported
140	5700	Not Supported	Not Supported
149	5745	Not Supported	Supported
153	5765	Not Supported	Supported
157	5785	Not Supported	Supported
161	5805	Not Supported	Supported
165	5825	Not Supported	Supported

6.5.1 EU Restrictions on 5 GHz Wi-Fi Usage

Due to EU restrictions on 5 GHz Wi-Fi bands the DynaGATE 10-12 is limited to indoor operation and should only be operated in the frequency band 5150 MHz – 5250 MHz (U-NII-1) covering 20 MHz channels (36,40,44,48) and 40 MHz channels(38,46).
Dynamic Frequency selection (DFS) as master or slave is not supported by the DynaGATE 10-12.

6.5.2 FCC Restrictions on 5 GHz Wi-Fi Usage

Due to FCC restrictions on 5 GHz Wi-Fi bands the DynaGATE 10-12 is limited to indoor operation within the frequency band 5150 MHz – 5250 MHz (U-NII-1) covering 20 MHz channels (36,40,44,48) and 40 MHz channels(38,46).
Dynamic Frequency selection (DFS) as master or slave is not supported by the DynaGATE 10-12.

6.6 Antennas list

The DynaGATE 10-12 has been certified with the following antennas:

Antenna Types	DynaGATE 10-12-XY Versions	Manufacturer and Part Number
Wi-Fi / Bluetooth	-X2, -X5, -X6	• Linx Technologies ANT-DB1-RAF-RPS • Taoglas MA.950.W.A.LBICG.005
Mobile connectivity	-X3, -X5, -X5, -X6	• Taoglas GSA.8827.A101111 • Taoglas MA.950.W.A.LBICG.005
GNSS	All versions	• Taoglas AA.107.301111 • Taoglas MA.950.W.A.LBICG.005

NOTICE

Within the EU, antennas have to be used in compliance with the RED requirements.

Within the US/Canada, antennas have to be used in compliance with the FCC/ISED requirements.

6.7 RoHS 3 compliance

This product, including all its components and its sub-assemblies, have been manufactured in compliance with the Directive 2011/65/EU of the European Parliament and of the Council of 8 June 2011 on the restriction of the use of certain hazardous substances in electrical and electronic equipment.

6.8 WEEE compliance

In compliance with the Directive 2012/19/EU of the European Parliament and of the Council of 4 July 2012 on waste electrical and electronic equipment (WEEE), the symbol on the right, shown on the product or within its literature, indicates separate collection for electrical and electronic equipment (EEE) that has been placed on the market after 2005.

The product described in this document, at the end of its life cycle, must be collected separately and managed in accordance with the provisions of the current Directive on waste of electrical and electronic equipment.

Because of the substances present in the product, improper disposal can cause damage to human health and to the environment.
To avoid any possible legal implications, contact your local waste collection body for full collect and recycling information.

(This page has been intentionally left blank)

7 INTERFACES OVERVIEW

7.1 Front side overview

The front side layout is the following:

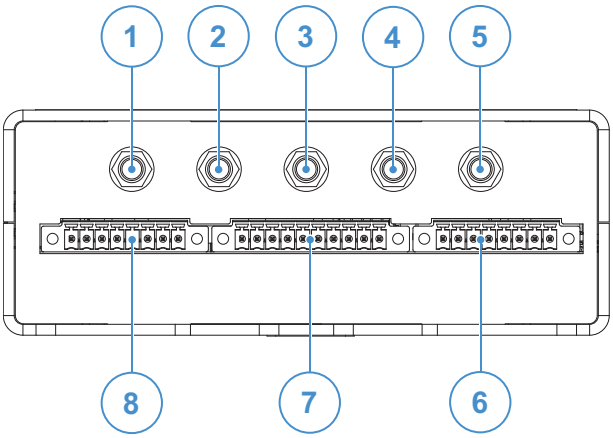

Figure 7.1 - Front panel interfaces layout

Ref#	Description
1	2.4 GHz Wi-Fi / Bluetooth antenna connector (only for versions: -X2, -X5, -X6, -X7)
2	Internal Main Mobile antenna connector (only for versions: -X3, -X4, -X5, -X6, -X7)
3	Internal Global Navigation Satellite System (GNSS) antenna connector
4	Internal Diversity Mobile antenna connector (only for versions: -X3, -X4, -X5, -X6, -X7)
5	5 GHz Wi-Fi antenna connector (only for versions: -X2, -X5, -X6, -X7)
6	CAN 0/1 connector
7	COM 0/1 connector
8	Digital I/Os connector

Table 7.1 - Rear panel interfaces description

7.2 Rear side overview

The rear side layout is the following:

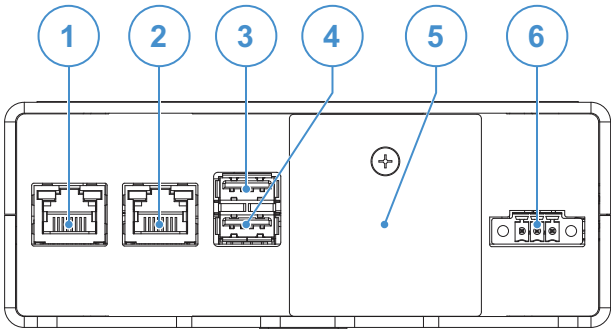

Figure 7.2 - Rear panel interfaces layout

Ref#	Description
1	Ethernet ETH 1 connector
2	Ethernet ETH 0 connector
3	USB 0 connector
4	USB 1 connector
5	Service Panel
6	Power IN connector

Table 7.2 - Rear panel interfaces description

7.2.1 *Service Panel interfaces*

The interfaces available in the Service Panel are the following:

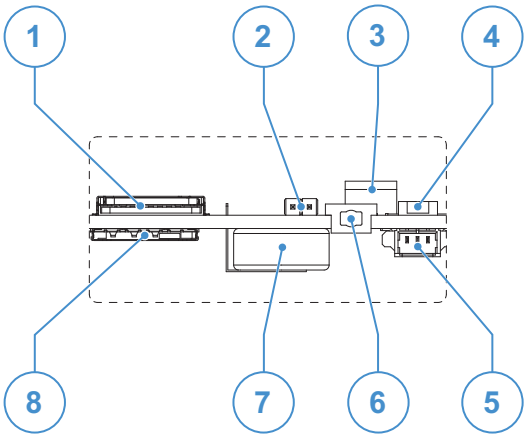

Figure 7.3 - Service Panel interfaces layout

Ref#	Description
1	Combo MicroSD + MicroSIM cards receptacle; pull-lever
2	Boot selection jumper
3	DIP-switch for serial ports configuration
4	Programmable pushbutton
5	TTL Serial console
6	Hardware reset pushbutton
7	RTC backup supercap
8	MicroSIM card receptacle; push-pull

Table 7.3 - Service Panel interfaces description

7.3 Right side overview

The right side layout is the following:

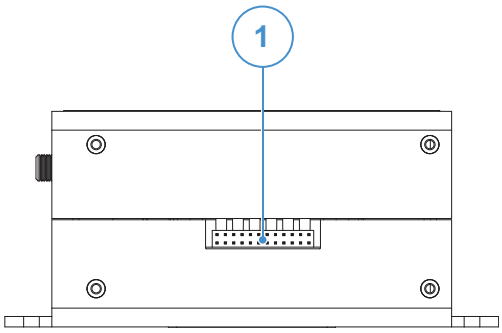

Figure 7.4 - Expansion connector

Ref#	Description
1	Expansion Connector

Table 7.4 - Expansion connector description

For further details see: "Expansion connector" on page 53

7.4 Left side overview

The left side layout is the following:

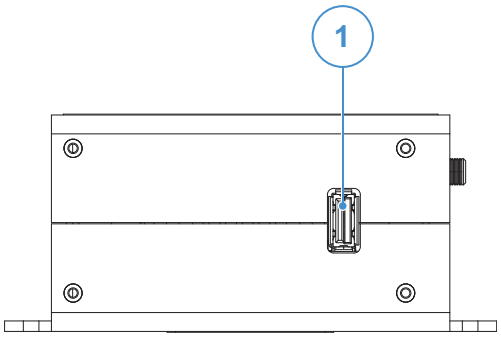

Figure 7.5 - Expansion USB connector layout

Ref#	Description
1	2.0 Host USB connector (ready to interface optional USB accessories, e.g.: ReliaCELL 10-20)

Table 7.5 - Expansion USB connector description

7.5 LED indicators overview

The LED indicators are placed on the bottom side of the product. They are the following:

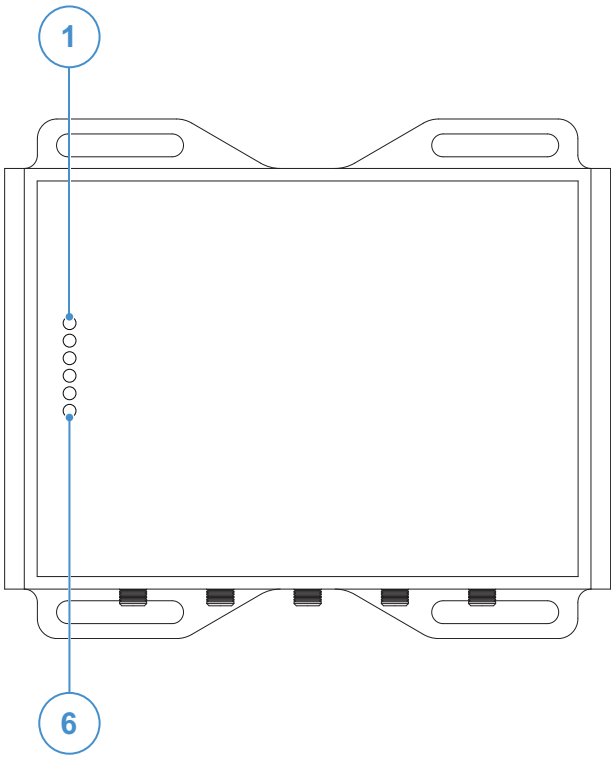

Figure 7.6 - LED indicators layout

Ref#	Use	Color
1	USER1 (General purpose)	Green
2	USER2 (General purpose)	Green
3	USER3 (General purpose)	Amber
4	USER4 (General purpose)	Amber
5	CELLULAR (Mobile modem activity; only for versions: -X3, -X4, -X5, -X6, -X7): • LED ON: Modem ON • LED blinking: Modem connected to cellular network	Green
6	POWER: • LED ON: Product powered by the external source • LED OFF: Product not powered by the external source	Blue

Table 7.6 - LED indicators description

8 INTERFACES IN DETAIL

8.1 Wi-Fi and Bluetooth (only for versions: -X2, -X5, -X6, -X7)

The DynaGATE 10-12 provides the following Wi-Fi / Bluetooth functionality:

- 2.5 GHz Wi-Fi 802.11a,b,g,n / BLE 4.2 BLE Bluetooth
- 5 GHz Wi-Fi 802.11a,b,g,n

The internal circuitry allows for 2.5 GHz Wi-Fi and Bluetooth coexistence.

The Wi-Fi and Bluetooth antennas connectors are placed on the front side.

8.1.1 Wi-Fi specifications

- Integrated 2.4 & 5G GHz Power Amplifier (PA) for WLAN solution
- WLAN Baseband Processor and RF transceiver Supporting IEEE Std 802.11a/b/g/n
- WLAN 2.4/5 GHz SISO (20/40 MHz channels)
- Baseband Processor
  - IEEE Std 802.11a/b/g/n data rates and IEEE Std 802.11n data rates with 20 or 40 MHz SISO
- Fully calibrated system. Production calibration not required
- Medium Access Controller (MAC)
  - Embedded ARM™ Central Processing Unit (CPU)
  - Hardware -Based Encryption/Decryption using 64 -, 128 -, and 256 -Bit WEP, TKIP or AES Keys
  - Supports requirements for Wi -Fi Protected Access (WPA and WPA2.0) and IEEE Std 802.11i (includes hardware -accelerated Advanced Encryption Standard (AES))
  - Designed to work with IEEE Std 802.1x
- IEEE Std 802.11d,e,h,i,k,r PICS compliant
- New advanced co -existence scheme with BT/BLE
- 2.4/5 GHz Radio
  - Internal LNA and PA
  - Supports: IEEE Std 802.11a, 802.11b, 802.11g and 802.11n
- Supports 4 bit SDIO host interface, including high speed (HS) and V3 modes.

8.1.1.1 2.4 GHZ TX output power

Maximum RMS output power measured at 1dB from IEEE spectral mask or EVM.

Parameter	Value
Operation frequency range	2412 to 2484 MHz
Output Power	17 dBm @ condition: 1 Mbps DSSS

8.1.1.2 5 GHZ TX output power

Maximum RMS output power measured at 1dB from IEEE spectral mask or EVM.

Parameter	Value
Operation frequency range	4910 to 5825MHz
Output Power	16.8 dBm @ condition: 6 Mbps OFDM

8.1.2 Bluetooth specifications

- Supports Bluetooth 4.2
- Includes concurrent operation and built -in coexisting and prioritization handling of Bluetooth, BLE, audio processing and WLAN
- Dedicated Audio processor supporting on chip SBC encoding + A2DP:
  - Assisted A2DP (A3DP) support - SBC encoding implemented internally
  - Assisted WB-Speech (AWBS) support - modified SBC codec implemented internally

8.1.3 BLE specifications

- Fully compliant with BT and BLE dual mode standard
- Support for all roles and role-combinations, mandatory as well as optional
- Supports up to 10 BLE connections
- Independent buffering for LE allows having large number of multiple connections without affecting BR/EDR performance

8.1.4 Wi-Fi and Bluetooth antennas connectors specifications

Specifications are the same for both the following antennas connectors:

- 2.4 GHz Wi-Fi / Bluetooth
- 5 GHz Wi-Fi

Connector Layout:

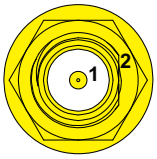

Connector Pinout:

Pin #	Description
1	Male inner pin contact
2	Female connector body (outer thread)

Connector Specifications:

- RP-SMA connector
- Gender: Female

Mating Connector Specifications:

- RP-SMA connector
- Gender: Male

8.2 Internal mobile connectivity (only for versions: -X3, -X4, -X5, -X6, -X7)

The DynaGATE 10-12 supports the following TELIT LE910 V2 modem variants, according to product versions based on the geographic area of usage:

DynaGATE 10-12-XY Version	TELIT LE910 V2 variant	Technology
-X3, -X5	LE910-NA1 - North America	LTE Cat 1 3G Fallback
-X4, -X6	LE910-EU1 - Europe	LTE Cat 1 2G Fallback
-X7	LE910-JP1 - Japan	LTE Cat 1

The antennas connectors are placed on the front side.

8.2.1 Internal modem specifications (according to product versions)

8.2.1.1 Product features

- Rx Diversity and MIMO DL 2x2
- LTE FDD Cat.1, 3GPP release 9 compliant
- Serial port multiplexer 3GPP TS27.010
- Built in UDP/TCP/FTP/SMTP stack
- IP stack with TCP and UDP protocol

8.2.1.2 LTE data

- Uplink up to 5 Mbps
- Downlink up to 10 Mbps

8.2.1.3 Supported bands

Technology	4G bands	3G bands	2G bands
LTE Cat 1 (NA) 3G Fallback	FDD B2, B4, B5, B12, B13	B2, B5	-
LTE Cat 1 (EU) 2G Fallback	FDD B1, B3, B7, B8, B20	-	GSM 900, DCS 1800
LTE Cat 1 (JP)	FDD B1, B19, B21	-	-

8.2.1.4 TX output power

Band	Power Class
LTE All Bands	Class 3 (0.2W)
WCDMA All Bands	Class 3 (0.25W)
GSM 900	Class 4 (2W)
DCS 1800	Class 1 (1W)

8.2.1.5 Main antenna requirements

NA version

Feature	Value
Frequency range	Depending by the frequency band(s) provided by the network operator
Bandwidth	140 MHz in LTE/WCDMA Band 2 445 MHz in LTE Band 4 70 MHz in LTE/WCDMA Band 5 47 MHz in LTE Band 12 41 MHz in LTE Band 13
Impedance	50 Ohm
Input power	> 24dBm Average power
VSWR absolute max	≤ 10:1 (limit to avoid permanent damage)
VSWR recommended	≤ 2:1 (limit to fulfill all regulatory requirements)

EU version

Feature	Value
Frequency range	Depending by the frequency band(s) provided by the network operator
Bandwidth	250 MHz in LTE/WCDMA Band 1 170 MHz in LTE/WCDMA Band 3 / DCS1800 190 MHz in LTE Band 7 80 MHz in LTE/WCDMA Band 8 / GSM900 71 MHz in LTE Band 20
Impedance	50 Ohm
Input power	> 24dBm Average power
VSWR absolute max	≤ 10:1 (limit to avoid permanent damage)
VSWR recommended	≤ 2:1 (limit to fulfill all regulatory requirements)

JP version

Feature	Value
Frequency range	Depending by the frequency band(s) provided by the network operator
Bandwidth	250 MHz in LTE Band 1 60 MHz in LTE Band 19 63 MHz in LTE Band 21
Impedance	50 Ohm
Input power	> 24dBm Average power
VSWR absolute max	≤ 10:1 (limit to avoid permanent damage)
VSWR recommended	≤ 2:1 (limit to fulfill all regulatory requirements)

8.2.1.6 Second antenna requirements (for antenna diversity)

NA version

Feature	Value
Frequency range	Depending by the frequency band(s) provided by the network operator
Bandwidth	60 MHz in LTE/WCDMA Band 2 45 MHz in LTE Band 4 25 MHz in LTE/WCDMA Band 5 15 MHz in LTE Band 12 10 MHz in LTE Band 13
Impedance	50 Ohm
VSWR recommended	≤ 2:1 (limit to obtain the maximum sensitivity)

EU version

Feature	Value
Frequency range	Depending by the frequency band(s) provided by the network operator
Bandwidth	60 MHz in LTE/WCDMA Band 1 75 MHz in LTE/WCDMA Band 3 / DCS1800 70 MHz in LTE Band 7 35 MHz in LTE/WCDMA Band 8 / GSM900 30 MHz in LTE Band 20
Impedance	50 Ohm
VSWR recommended	≤ 2:1 (limit to obtain the maximum sensitivity)

JP version

Feature	Value
Frequency range	Depending by the frequency band(s) provided by the network operator
Bandwidth	60 MHz in LTE Band 1 15 MHz in LTE Band 19 15 MHz in LTE Band 21
Impedance	50 Ohm
VSWR recommended	≤ 2:1 (limit to obtain the maximum sensitivity)

8.2.2 *Internal mobile antennas connectors specifications*

Specifications are the same for both the following:

- Main Antenna Connector
- Diversity Antenna Connector

Connector Layout:

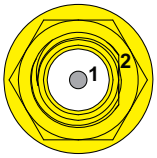

Connector Pinout:

Pin #	Description
1	Female inner pin contact
2	Female connector body (outer thread)

Connector Specifications:

- SMA connector
- Gender: Female

Mating Connector Specifications:

- SMA connector
- Gender: Male

8.3 The MicroSIM card receptacles

The DynaGATE 10-12 includes the following MicroSIM card receptacles in the Service Panel:

1st MicroSIM card receptacle: Integrated in a Combo MicroSD + MicroSIM cards receptacle (pull-lever) **on the top side** of the circuit board

2nd MicroSIM card receptacle: **On the bottom side** of the circuit board (push-pull)

NOTICE
TURN THE SIM PIN OFF BEFORE INSERTING THE SIM CARD IN THE RECEPTACLE. THE MOBILE CONNECTION WILL NOT WORK IF THE SIM PIN IS ON.

8.3.1 How to insert / remove the MicroSIM card

8.3.1.1 If you are using the receptacle on the top side of the circuit board

To insert the MicroSIM card, push it in the holder with the contacts facing down, and the cut corner facing inwards:

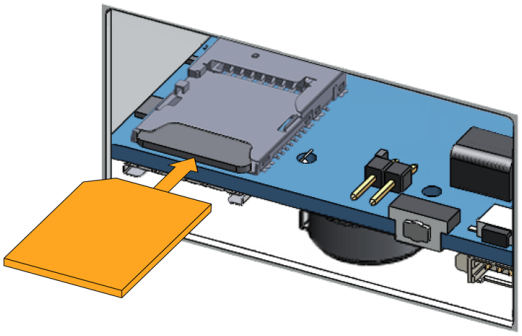

To remove the MicroSIM card, pull the eject lever towards yourself: use a pen tip to simplify the operation:

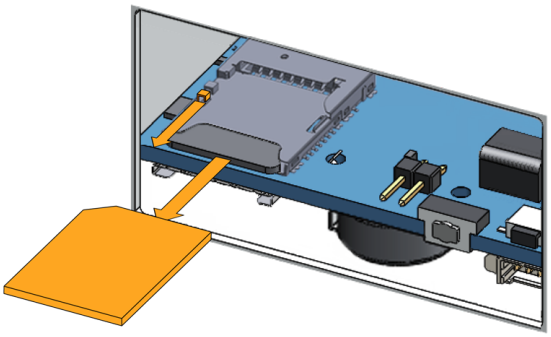

8.3.1.2 If you are using the receptacle on the bottom side of the circuit board

To insert the MicroSIM card, push it in the holder with the contacts facing up, and the cut corner facing inwards.

To remove the MicroSIM card, pull it out from the holder: use a pair of tweezers to simplify the operation.

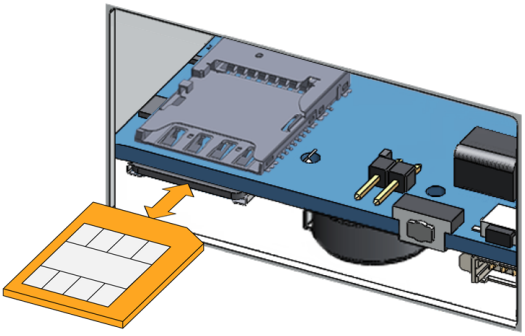

8.4 Internal GNSS

The DynaGATE 10-12 provides the following GNSS functionality:

DynaGATE 10-12-XY versions	GNSS functionality
X ≤ 3	Internal; 72 channels GPS, Galileo, GLONASS, BeiDou
X ≥ 4	Internal Untethered Dead Reckoning; 72 channels GPS, Galileo, GLONASS, BeiDou

The GNSS outputs NMEA data which can be read by applications directly.

The GNSS antenna connector is placed on the front side.

8.4.1 Internal GNSS specifications

Receiver type:

- 72-channel engine
- GPS/QZSS L1 C/A, GLONASS L10F, BeiDou B1
- SBAS L1 C/A: WAAS, EGNOS, MSAS
- Galileo-ready E1B/C

Nav. update rate:

- Single GNSS: up to 18 Hz
- Concurrent GNSS: up to 10 Hz

Position accuracy:

- 2.0 m CEP

Acquisition:

- Cold starts: 26 s
- Aided starts: 3 s
- Reacquisition: 1 s

Sensitivity:

- Tracking & Nav: -160 dBm
- Cold starts: -148 dBm
- Hot starts: -156 dBm

8.4.2 Internal GNSS antenna connector specifications

Connector Layout:

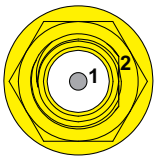

Connector Pinout:

Pin #	Description
1	Female inner pin contact
2	Female connector body (outer thread)

Connector Specifications:

- SMA connector
- Gender: Female

Mating Connector Specifications:

- SMA connector
- Gender: Male

8.5 Digital I/Os

The DynaGATE 10-12 provides the following Digital I/Os:

- 2x Digital Input: 36 V, 1 kV Optoinsulated
- 2x Digital Output: 40 V AC/DC, 1 kV Optoinsulated, 500 mA, 1 kHz Max Switching

The Digital I/Os connector is available on the front side.

8.5.1 Insulated Digital Inputs

8.5.1.1 Electrical specifications

The table below shows the electrical specifications of the digital inputs:

Characteristic	Value
Logic Zero	0 V ≤ VIN_low ≤ 1 V
Logic One	2 V ≤ VIN_high ≤ 36 V
Input Current	< 3.5 mA

8.5.1.2 Electrical schematics

The figure below shows the electrical schematics of one digital input:

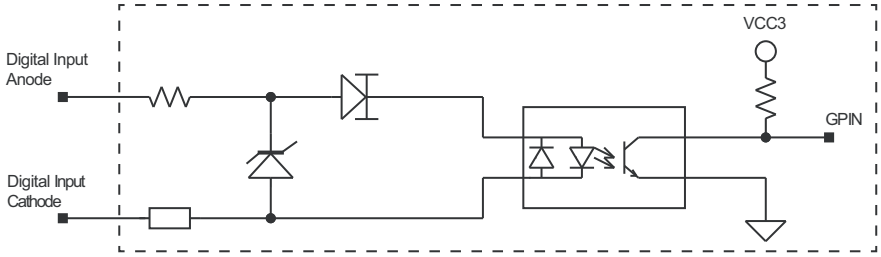

8.5.2 *Insulated Digital Outputs*

8.5.2.1 Electrical specifications

The table below shows the electrical specifications of the digital outputs:

Characteristic	Value
Maximum Voltage	40 V
Maximum Current	500 mA
Output ON Resistance	Typical: 0.83 Ohm Maximum: 2.50 Ohm
>Maximum switching frequency	1 kHz

8.5.2.2 Electrical schematics

The illustration below shows the electrical schematics of one digital output:

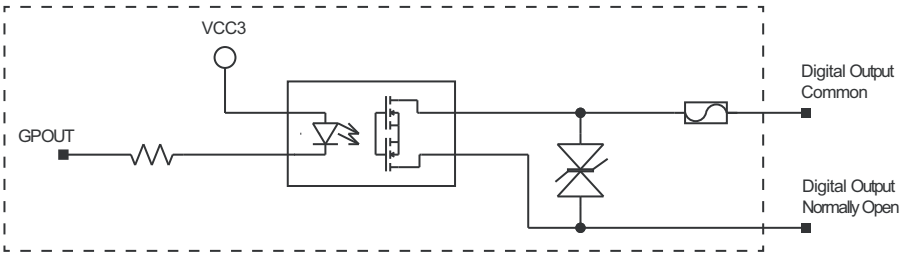

8.5.3 *Digital I/Os connector specifications*

Connector Layout:

Connector Specifications:
- Base strip, Header
- Gender: Female
- Type: 8-pin, 3.5 mm pitch

Mating Connector Specifications:
- Pluggable screw terminal block;
- Gender: Male
- Type: 8-pin, 3.5 mm pitch
- Example:
  Manufacturer: Phoenix Contact
  Part Number: MC 1,5/ 8-STF-3,5 - 1847181
  (or equivalent)

Connector Pinout:

Pin #	Signal	Type	Description
1	Digital OUT: 1COM	O	Digital Output 1 Common
2	Digital OUT: 1NO	O	Digital Output 1 Normally Open
3	Digital OUT: 2COM	O	Digital Output 2 Common
4	Digital OUT: 2NO	O	Digital Output 2 Normally Open
5	Digital IN: 1A	I	Digital Input 1 Anode
6	Digital IN: 1C	I	Digital Input 1 Cathode
7	Digital IN: 2A	I	Digital Input 2 Anode
8	Digital IN: 2C	I	Digital Input 2 Cathode

8.6 COM ports 0 and 1 for DynaGATE 10-12-XY with X ≤ 3

The DynaGATE 10-12 provides the following COM ports:

- 2x RS-232/485: COM 0/1; Surge protected, RS-485 termination and fail-safe resistors (Default: RS-232)

COM ports specifications:

- The COM ports are surge protected
- Each port has 2 pairs of pins (each signal is doubled)
- Both COM ports are disabled when the ReliaGATE is initially powered ON
- To set the RS-232/485 modes see "How to set the RS-232/485 modes" on page 69
- Maximum supported baud rates are:
  - For RS-232 mode: up to 450 kbps
  - For RS-485 mode: up to 1.75 Mbps

The COM 0/1 connectors are available on the front side.

8.6.1 Note for termination resistors (only for RS-485 mode)

Each port has 2 pairs of pins (each signal is doubled):

- If the DynaGATE 10-12 is located at the beginning, or at the end, of a RS-485 chain, spare pair of pins can be used to connect permanently standard axial resistor 120 Ohm, if the application requires that
- If the DynaGATE 10-12 is not at the beginning or at end of the RS-485 chain, two options are available:
  - Option 1: one pair of pins can remain not connected
  - Option 2: one pair of pins can be used to connect the previous device of the chain, and the other pair can be used to connect the following device of the chain

8.6.2 Note for fail safe resistors (only for RS-485 mode)

To insert the RS-485 fail-safe resistors, use the DIP switch available in the Service Panel.

8.6.2.1 Switches meaning

Default DIP switch configuration is OFF; this means no resistors inserted.

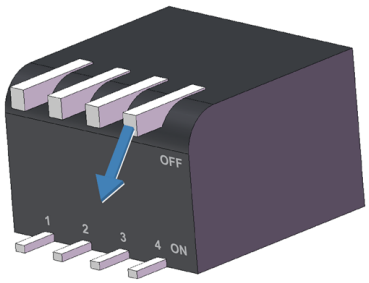

SW#	Signal	Description
1	RS232_RX/485_D+ Line	ON: 4.7 kΩ pull-up resistor inserted on COM 0
2	RS232_TX/485_D- Line	ON: 4.7 kΩ pull-down resistor inserted on COM 0
3	RS232_RX/485_D+ Line	ON: 4.7 kΩ pull-up resistor inserted on COM 1
4	RS232_TX/485_D- Line	ON: 4.7 kΩ pull-down resistor inserted on COM 1

8.6.3 COM connector specifications

Connector Layout:

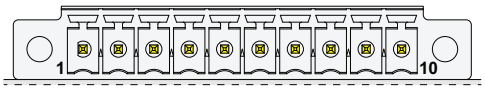

Connector Specifications:

- Base strip, Header
- Gender: Male
- Type: 10-pin, 3.5 mm pitch

Mating Connector Specifications:

- Pluggable screw terminal block;
- Gender: Female
- Type: 10-pin, 3.5 mm pitch
- Example:
  Manufacturer: Shenzhen Connection Electronics Co., Ltd.
  Part Number: MC 1,5/10-STF-3,5 - 1847204
  (or equivalent)

Connector Pinout:

Pin #	Signal	Type	Description
1	COM 0: TX/D-	O	COM port 0: • RS-232: Transmit Data • RS-485: B (D- Line)
2	COM 0: RX/D+	I	COM port 0: • RS-232: Receive Data • RS-485: A (D+ Line)
3	COM 0: GND	P	Ground (not isolated)
4	COM 0: RX/D+	I	COM port 0: • RS-232: Receive Data • RS-485: A (D+ Line)
5	COM 0: TX/D-	O	COM port 0: • RS-232: Transmit Data • RS-485: B (D- Line)
6	COM 1: TX/D-	O	COM port 1: • RS-232: Transmit Data • RS-485: B (D- Line)
7	COM 1: RX/D+	I	COM port 1: • RS-232: Receive Data • RS-485: A (D+ Line)
8	COM 1: GND	P	Ground (not isolated)
9	COM 1: RX/D+	I	COM port 1: • RS-232: Receive Data • RS-485: A (D+ Line)
10	COM 1: TX/D-	O	COM port 1: • RS-232: Transmit Data • RS-485: B (D- Line)

8.7 COM ports 0 and 1 for DynaGATE 10-12-XY with X ≥ 4

The DynaGATE 10-12 provides the following COM ports:

- 1x RS-422/485: COM 0; Surge protected, Insulated, Full Duplex / Half Duplex (Default: RS-422 Full Duplex)
- 1x RS-232/485: COM 1; Surge protected, RS-485 termination and fail-safe resistors (Default: RS-232)

COM ports specifications:

- The COM ports are surge protected
- Both COM ports are disabled when the ReliaGATE is initially powered ON
- To set the RS-232/485 modes see "How to set the RS-232/485 modes" on page 69
- Maximum supported baud rates are:
  - For RS-232 mode: up to 450 kbps
  - For RS-485 mode: up to 1.75 Mbps

The COM 0/1 connectors are available on the front side.

For further information, see: "COM ports 0 and 1, Console port " on page 69

8.7.1 Note for termination resistors (only for COM 1 in RS-485 mode)

COM 1 has 2 pairs of pins (each signal is doubled):

- If the DynaGATE 10-12 is located at the beginning, or at the end, of a RS-485 chain, spare pair of pins can be used to connect permanently standard axial resistor 120 Ohm, if the application requires that
- If the DynaGATE 10-12 is not at the beginning or at end of the RS-485 chain, two options are available:
  - Option 1: one pair of pins can remain not connected
  - Option 2: one pair of pins can be used to connect the previous device of the chain, and the other pair can be used to connect the following device of the chain

8.7.2 Note for fail safe resistors (only for COM 1 for RS-485 mode)

To insert the RS-485 fail-safe resistors, use the DIP switch available in the Service Panel.

8.7.2.1 Switches meaning

Default DIP switch configuration is OFF; this means no resistors inserted.

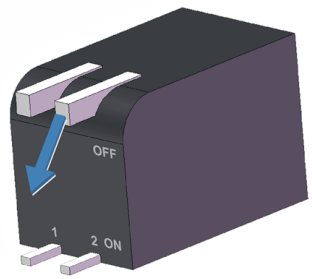

SW #	Signal	Description
1	RS232_RX/485_D+ Line	ON: 4.7 kΩ pull-up resistor inserted on COM 1
2	RS232_TX/485_D- Line	ON: 4.7 kΩ pull-down resistor inserted on COM 1

8.7.3 COM connector specifications

Connector Layout:

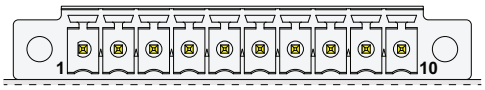

Connector Specifications:
- Base strip, Header
- Gender: Male
- Type: 10-pin, 3.5 mm pitch

Mating Connector Specifications:
- Pluggable screw terminal block;
- Gender: Female
- Type: 10-pin, 3.5 mm pitch
- Example:
  Manufacturer: Shenzhen Connection Electronics Co., Ltd.
  Part Number: MC 1,5/10-STF-3,5 - 1847204
  (or equivalent)

Connector Pinout:

Pin #	Signal	Type	Description
1	COM 0: Y/D+	O	COM port 0: • RS-422: Y (+OUT) • RS-485: A (D+ Line)
2	COM 0: Z/D-	I	COM port 0: • RS-422: Z (-OUT) • RS-485: B (D- Line)
3	COM 0: ISO GND	P	Ground (isolated)
4	COM 0: A/D+	I	COM port 0: • RS-422: A(+IN) • RS-485: A (D+ Line)
5	COM 0: B/D-	O	COM port 0: • RS-422: B(-IN) • RS-485: B (D- Line)
6	COM 1: TX/D-	O	COM port 1: • RS-232: Transmit Data • RS-485: B (D- Line)
7	COM 1: RX/D+	I	COM port 1: • RS-232: Receive Data • RS-485: A (D+ Line)
8	COM 1: GND	P	Ground (not isolated)
9	COM 1: RX/D+	I	COM port 1: • RS-232: Receive Data • RS-485: A (D+ Line)
10	COM 1: TX/D-	O	COM port 1: • RS-232: Transmit Data • RS-485: B (D- Line)

8.7.4 Note for RS-485 Half Duplex (only for COM 0 in RS-485 mode)

To set an RS-485 connection in Half Duplex, add the following external loop-back:

connect pin 1 to pin 4, and pin 2 to pin 5.

Then: pins 1 and 4 are: D+ Line (A/Y); pins 2 and 5 are: D- Line (B/Z).

As factory option, the RS-485 Half Duplex mode can be set as default configuration. With this setup, the RS-422 mode is no longer available.

8.8 CAN ports 0 and 1

The DynaGATE 10-12 provides 2x CAN (Controller Area Network) ports compliant with the CAN Specification 2.0, Parts A and B:

- CAN 0
- CAN 1

The CAN 0/1 connectors are available on the front side.

Notes about CAN power supply:

- The DynaGATE 10-12 can supply power to the 2 CAN ports: 100 mA @ 5V (each port)
- CAN power can be enabled / disabled by software
- The interfaces are surge protected.

8.8.1 CAN 0/1 connector specifications

Connector Layout:

Connector Specifications:

- Base strip, Header
- Gender: Male
- Type: 8-pin, 3.5 mm pitch

Mating Connector Specifications:

- Pluggable screw terminal block;
- Gender: Female
- Type: 8-pin, 3.5 mm pitch
- Example:
  Manufacturer: Phoenix Contact
  Part Number: MC 1,5/ 8-STF-3,5 - 1847181
  (or equivalent)

Connector Pinout:

Pin #	Signal	Type	Description
1	CAN 0: H	IO	CAN port 0 Positive Data
2	CAN 0: L	IO	CAN port 0 Negative Data
3	CAN 0: 5V	5	CAN node 0 5 V Output power supply
4	CAN 0: GND	P	Ground
5	CAN 1: H	IO	CAN port 1 Positive Data
6	CAN 1: L	IO	CAN port 1 Negative Data
7	CAN 1: 5V	5	CAN node 1 5 V Output power supply
8	CAN 1: GND	P	Ground

8.9 Ethernet ETH 0 and 1

The DynaGATE 10-12 provides 2x 10/100 Mbps Ethernet ports for wired network connectivity:

- ETH 0
- ETH 1

The ETH 0/1 connectors are available on the rear side.

8.9.1 Ethernet specifications

Feature	Description
Network Standard	IEEE 802.3u 10/100-BaseTX. IEEE 802.3x full-duplex flow control.
Speeds	10/100-BaseTX interfaces with MAC
Notes	The interfaces are noise and surge protected. The RJ-45 connector has integrated magnetics.

8.9.2 ETH 0/1 connectors specifications

Connector Layout:

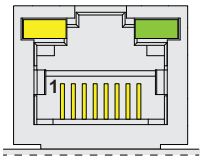

Connector Specifications:

- RJ-45 socket
- Gender: Female

Mating Connector Specifications:

- RJ-45 plug
- Gender: Male

Connector Pinout (pins not listed are not connected):

Pin #	Signal	Type	Description
1	TX+	O	Transmit Data +
2	TX-	O	Transmit Data -
3	RX+	I	Receive Data +
6	RX-	I	Receive Data -

8.10 Host USB ports

The DynaGATE 10-12 provides 3x Host 2.0 USB ports (Noise and Surge Protected) for general purpose applications:

- USB 0 on the front side; max load: 500 mA (high retention connector)
- USB 1 on the front side; max load: 500 mA (high retention connector)
- USB 2 on the left side; max load: 1 A (ready to interface optional USB accessories, e.g.: ReliaCELL 10-20)

8.10.1 USB 0/1/2 connectors specifications

Connector Pinout:

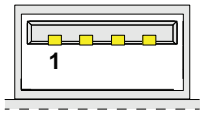

Connector Specifications:

- USB Type-A socket
- Gender: Female

Mating Connector Specifications:

- USB Type-A plug
- Gender: Male

Connector Pinout (pins not listed are not connected):

Pin #	Signal	Type	Description
1	VBUS	5	+5V
2	D-	IO	Negative data
3	D+	IO	Positive data
4	DGND	P	Ground

8.11 Expansion connector

The DynaGATE 10-12 provides an expansion connector for the following:

- Additional USB OTG interface
- I^2S Audio interface
- GPIO expansion interface
- I^2C interface
- SPI interface

The expansion connector is available on the right side.

8.11.1 Expansion connector specifications

Connector Layout:

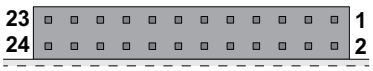

Connector Specifications:

- SQT Socket
- Gender: Female
- Type: 12*2-pin; 2.0 mm pitch

Mating Connector Specifications:

- Samtec MTMM Housing
- Gender: Male
- Type: 12*2-pin; 2.0 mm pitch
- Example:
  Manufacturer: Samtec
  Part Number: MTMM-112-07-L-D-3
  (or equivalent)

Connector Pinout:

Pin #	Signal	Type	Description
1	3V3	P	3.3V/100mA max power supply
2	GND	P	Ground
3	5V	P	5V/1A max power supply
4	USB: EXP+	IO	USB data positive
5	USB: EXP-	IO	USB data negative
6	GND	P	Ground
7	MCASP0: FSX	IO	I2S audio or GPIO
8	MCASP0: AXR0	IO	I2S audio or GPIO
9	MCASP0: ACLKX	IO	I2S audio or GPIO
10	MCASP0: AXR1	IO	I2S audio or GPIO
11	GND	P	Ground
12	Reserved	-	Reserved
13	Reserved	-	Reserved
14	USB: OTG	I	OTG detect or GPIO
15	GPIO: EXP_2	O	3.3V OUT enable (status)
16	GPIO: EXP_1	O	5V OUT enable (status)
17	GND	P	Ground
18	SPI: D1	I	SPI Data IN or GPIO
19	SPI: CS0	O	SPI Chip select or GPIO
20	SPI: D0	O	SPI Data OUT or GPIO
21	SPI: SCLK	O	SPI Clock or GPIO
22	GND	P	Ground
23	I2C: SDA	IO	I2C Data
24	I2C: SCL	O	I2C Clock

8.12 TTL Serial console

The DynaGATE 10-12 provides a 3.3 V TTL compatible Serial console port in the Service Panel.

The voltage levels are the following:

- Log 1 (Hi): 2.0 to 3.3 V
- Log 0 (Low): 0 to 0.8 V

8.12.1 TTL Serial console connector specifications

Connector Layout:

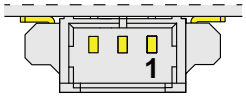

Connector Specifications:

- Shrouded header
- Gender: Male
- Type: Pitch 1.25 mm; 3-pin

Mating Connector Specifications:

- Receptacle Housing
- Gender: Female
- Type: 3-pin, 1.25 mm pitch
- Example:
  Manufacturer: Molex
  Part Number: 51021-0300
  (or equivalent)

Connector Pinout:

Pin #	Signal	Type	Description
1	GND	P	Ground
2	TX	O	Transmit Data
3	RX	I	Receive Data

8.13 The MicroSD card receptacle

The DynaGATE 10-12 includes a MicroSD card receptacle in the Service Panel.

It is integrated in a Combo MicroSD + MicroSIM cards receptacle (pull-lever) **on the top side** of the circuit board.

8.13.1 How to insert / remove the MicroSD card in the receptacle

To insert the MicroSD card, push it in the holder with the contacts facing down.

To remove the Micro SD card, pull it out from the holder. Use your little finger or a pair of tweezers to simplify the operation.

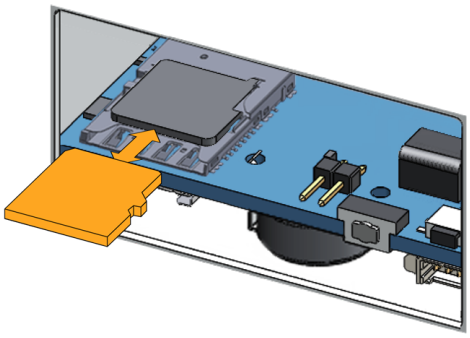

8.14 RTC (Real Time Clock)

The DynaGATE 10-12 includes the following two RTC (Real Time Clocks) devices:

RTC device	Description	Use
/dev/rtc0	• Internal (in the CPU SoC)	Reserved
/dev/rtc1	• External (I2C-based RTC device) • Default RTC used by Linux • Accuracy: 25 minutes per year (at 25 °C)	Wake up the DynaGATE 10-12 from a deep low power state

8.14.1 The RTC device "/dev/rtc1"

The RTC device "/dev/rtc1" offers three timestamp registers.

8.14.2 The RTC backup supercap

The DynaGATE 10-12 includes a supercap in the Service Panel.

The RTC backup supercap can retain the time-stamp for at least 10 days when the DynaGATE 10-12 is powered OFF.

8.15 Watchdog

The DynaGATE 10-12 includes a watchdog / supervisor IC, external to the CPU.

8.16 Accelerometer

Your DynaGATE 10-12 includes a 3-axis +/- 8g accelerometer with 12 bit resolution and a programmable output signal which can trigger an interrupt to the CPU (movement detection).

8.17 The Programmable pushbutton

A programmable pushbutton is available in the Service Panel.

The pushbutton is sensed by a Linux daemon which executes a shell script every time the button is either pushed or released.

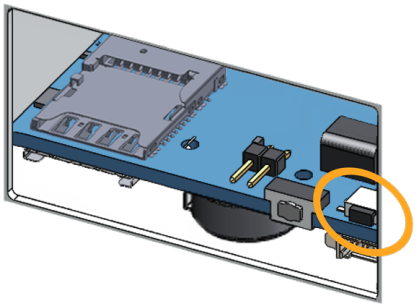

8.18 TPM

The DynaGATE 10-12 includes a TPM 2.0 hw module (Infineon SLB9670).

9 HOW TO SUPPLY POWER TO THE PRODUCT

NOTICE

This product is not provided with any ON/OFF switch.
The Power IN connector is the disconnecting means from the power supply network.

9.1 Power supply specifications

Power supply	Nominal: 12 or 24 VDC; Range: 9 to 36 VDC with transient protection and Vehicle Ignition Sense
Power consumption	2 W typical; 15 W maximum
Peak demand	< 15 W

9.1.1 Power IN connector and mating connector specifications

The power input is protected against: surge, noise, reverse polarity, over-voltage.

NOTICE

The Power IN connector is NOT protected against short circuit.
Always include an external fuse to protect the product!

The DynaGATE 10-12 provides the Power IN connector on the rear panel.

Connector Layout:

Connector Specifications:
- Base strip, Header
- Gender: Male
- Type: 3-pin, 3.5 mm pitch

Mating Connector Specifications:
- Pluggable screw terminal block
- Gender: Female
- Type: 3-pin, 3.5 mm pitch
- Example:
  Manufacturer: Phoenix Contact
  Part Number: MC 1,5/ 3-STF-3,5 - 1847068
  (or equivalent)

Connector Pinout:

Pin #	Signal	Type	Description
1	Power IN +	P	Positive power supply input
2	Power IN -	P	Negative power supply input
3	KEY	P	Vehicle Ignition Sense

9.2 How to supply power and turn ON the product

WARNING

ELECTRIC SHOCK HAZARD

Failure to supply power correctly, or failure to follow all operating instructions correctly, may create an electric shock hazard, which could result in personal injury or loss of life, and / or damage to equipment or other property.

To avoid injuries:

- **Do not perform any connections with wet hands**
- **Check any power cords for damage before using them**
- **Use certified power cables. The power cables must meet the power requirements of the devices**
- **Position cables with care. Avoid positioning cables in places where they may be trampled or compressed by objects placed on them**
- **Take particular care of plugs, power-points and outlets. Avoid overcharging them**
- **Before applying power, thoroughly review all installation, operation, and safety instructions**
- **Before operating any equipment, carefully read any supplied instructions**
- **Always disconnect power and discharge the circuits before touching them**
- **Only start the product with a power supply that meets the requirements stated on the voltage label. In case of uncertainties about the required power supply, contact the Eurotech Technical Support Team (see the back cover for full contact details) or the electricity authority.**

To supply power to the DynaGATE 10-12, complete the following steps:

1. Set up a DC power source that:
   - Meets the DynaGATE 10-12 power requirements
   - Deliver a maximum current of 2 A

   Check the input voltage as close as possible to the Power IN connector. This is to compensate for any cable losses, caused by cable length and other cable characteristics
2. Make sure that the DC power source is turned OFF
3. Include an external 2 A fuse on the line coming from the negative terminal of the DC power source to protect the DynaGATE 10-12
4. Connect the DC power source terminals to Pins 1 and 2 of the Power IN connector.

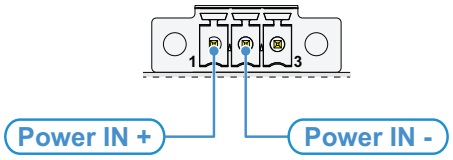

5. Turn ON the DC power source. The DynaGATE 10-12 automatically turns ON and the LED 6 (POWER) turns ON.

Note about the Vehicle Ignition Sense

The Vehicle Ignition Sense is a digital input that can be used to monitor the ignition status.
The DynaGATE 10-12 turns ON independently of the status of the Vehicle Ignition Sense (for further information see "Vehicle Ignition Sense" on page 73).

9.3 How to turn OFF the product

To turn the DynaGATE 10-12 OFF follow these steps:

1. Login the Administration console and run the shutdown command. The system turns itself OFF
2. Disconnect the DC power source terminals to the Power IN connector.

9.4 How to reduce the power consumption of the product

To reduce the power consumption of the DynaGATE 10-12, turn OFF the radio interfaces and disable unnecessary services that contribute to overall system power consumption.

9.5 How to perform a hardware reset of the product

To trigger a hardware reset of the DynaGATE 10-12 push the reset pushbutton available in the Service Panel.

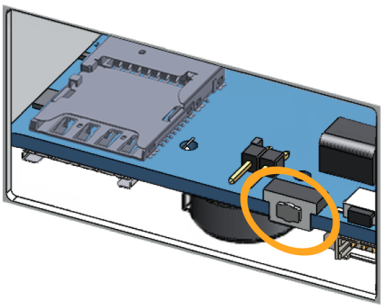

(This page has been intentionally left blank)

10 THE SOFTWARE

10.1 The Linux OS distribution

Eurotech can provide a Linux operating systems based on Yocto framework (www.yoctoproject.org) as well as an SDK for application development.

All the documentation for the developer is available from:www.yoctoproject.org/documentation.

10.2 The bootloader procedure

The bootloader procedure is the following:

1. The MLO file is loaded from either the external MicroSD card or the on-board eMMC memory, and saved in the on-chip memory to configure the RAM memory for use
2. The uboot.img file is loaded (from the same device where MLO was loaded from), saved in the RAM memory, and executed
3. The bootloader searches for a valid operating system. The search order is:
   a. MicroSD card
   b. eMMC
4. The bootloader fetches a FIT image which includes the kernel and device tree. The FIT image includes image signatures which are verified before boot

10.2.1 How to select the MLO source

The MLO file can be loaded from either the external MicroSD card or the on-board eMMC memory, according to the setting of the Boot selection jumper (JP2):

- JP2 inserted = Boot from Micro-SD
- JP2 removed = Boot from eMMC

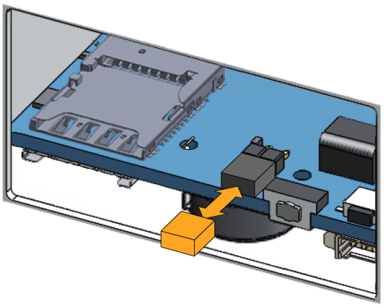

10.2.2 How to set up a correct MicroSD card / eMMC card partition

For a valid boot, the MicroSD card and the eMMC memory must be configured with at least these 2 partitions:

- 1st partition:
  - Type: FAT16
  - Flags: lba, boot
  - Contains the files: MLO and uboot.img
- 2nd partition:
  - Type: ext4
  - Contains the operating system, including the Linux kernel FIT image

(This page has been intentionally left blank)

11 How to access interfaces under Linux

Interfaces availability depends on the product version.

NOTICE
If Everyware Software Framework (ESF) is installed, it will manage the network interfaces, mobile modem, Bluetooth adapter and GPIOs. **Any changes you make to the Linux configuration files may be overwritten if the related service is managed by ESF.** **Refer to the ESF documentation for further details.**

11.1 How to drive the GPIOs: the GPIO utility

Several DynaGATE 10-12 interfaces are controlled by their GPIO. To manage these interfaces, you will need to control the relevant GPIO pin.

To drive a GPIO, use the GPIO utility: `gpio_utility`.

`gpio_utility` allows you to:

- Read / Write a GPIO status
- Set a GPIO as input or output
- Unexport a GPIO.

The GPIOs are exported by default at startup.

To read the GPIO status (for example: the status of LED 1), enter the following command:

```
gpio_utility gpio117
```

The output is the following:

- If LED 1 is ON, then `gpio117` = 1
- If LED 1 is OFF, then `gpio117` = 0

To set the GPIO status (for example: the status of LED 1), enter the following commands:

```
#turn led on
gpio_utility gpio117 1

#turn led off
gpio_utility gpio117 0
```

11.2 How to determine the Operating System version installed

To determine the Operating System version installed, enter the following command:

```
eurotech_versions
```

Example output:

```
eth_name_bsp: xxx
eth_vers_bsp: Operating System version
eth_partno_bsp: unknown
eth_serial_number: xxx
eth_model: xxx
eth_partno_epr: unknown
```

11.3 Memory and storage devices

The DynaGATE 10-12 exposes the memory and the storage devices as follows:

- Internal flash memory: `/dev/mmcblk0`
- MicroSD card memory: `/dev/mmcblk1`

11.4 Wi-Fi and Bluetooth

The DynaGATE 10-12 exposes the Wi-Fi and Bluetooth interfaces as follows:

- Wi-Fi interface: `wlan0`
- Bluetooth interface: `hci0`

The DynaGATE 10-12 exposes the power supply of the Bluetooth as follows:

- `/sys/class/gpio/gpio22/value`

To manage this GPIO, see "How to drive the GPIOs: the GPIO utility" on the previous page.

NOTES:

- **Turning the Bluetooth OFF and ON, does not automatically restart the daemon**
- **Wi-Fi power control is handled by the driver and is not user accessible.**

11.5 ReliaCELL (optional)

The DynaGATE 10-12 exposes the power supply for the ReliaCELL as follows:

- `/sys/class/gpio/gpio73/value`

To manage this GPIO, see "How to drive the GPIOs: the GPIO utility" on the previous page.

11.6 Cellular modem

The DynaGATE 10-12 supports the following TELIT LE910 V2 modem variants, according to product versions based on the geographic area of usage:

DynaGATE 10-12-XY Version	TELIT LE910 V2 variant	Technology
-X3, -X5	LE910-NA1 - North America	LTE Cat 1 3G Fallback
-X4, -X6	LE910-EU1 - Europe	LTE Cat 1 2G Fallback
-X7	LE910-JP1 - Japan	LTE Cat 1

NOTICE

Before using the cellular modem select the MicroSIM slot to use.

Refer to the TELIT LE910 V2 series AT command reference guide for a full list of cellular modem AT commands and example usage.

11.6.1 How to select the MicroSIM slot to use

To select the top SIM slot, use the following command:

```
telit-he910 chat 'AT#GPIO=2,1,1'
```

To select the bottom SIM slot, use the following command:

```
telit-he910 chat 'AT#GPIO=2,0,1'
```

11.6.2 Note for LE910-NA1 cellular modem: AT&T / Verizon firmware support

The LE910-NA1 cellular modem supports both AT&T and Verizon firmware.

The firmware used by the modem needs to be set the first time the modem is used. Once the modem firmware has been set, the same firmware will load on each modem reset.

A firmware switch between the two modem firmware versions can be performed during operation.

With dual SIM usage on the DynaGATE 10-12 it is possible to load both an AT&T and a Verizon SIM into the MicroSIM holders, and then switch between Verizon and AT&T firmware and their respective SIMs to provided coverage on either network. Due to the firmware switch, simultaneous operation is not possible.

AT&T / Verizon firmware selection is performed using an AT command. This loads the respective AT&T / Verizon firmware, resets the modem, and then re-enumerates the device on the bus.

NOTE: Allow 20 seconds from the execution of the command before sending further AT commands to allow the device to be re-enumerates on the USB bus.

11.6.2.1 How to select the AT&T firmware

To select the AT&T firmware, use the following command:

```
telit-he910 chat 'AT#FWSWITCH=0,1'
```

11.6.2.2 How to select the Verizon firmware

To select the Verizon firmware, use the following command:

```
telit-he910 chat 'AT#FWSWITCH=1,1'
```

11.7 GNSS

The DynaGATE 10-12 exposes the GNSS as follows:

- `/dev/ttyS5`

You need to enable the GNSS before it will work.

To enable the GNSS, enter the following command:

```
gpio_utility gpio81 1
```

To prove that the positioning is working, dump the serial port output by entering the following commands:

```
stty -F /dev/ttyS5 raw speed 9600
cat /dev/ttyS5
```

Example output:

```
$GNGSA,A,1,,,,,,,,,,,,,99.99,99.99,99.99*2E
$GPGSV,1,1,00*79
$GLGSV,1,1,00*65
$GNGLL,,,,,,V,N*7A
$GNTXT,01,01,01,NMEA unknown msg*46
$GNTXT,01,01,01,NMEA unknown msg*46
$GNTXT,01,01,01,NMEA unknown msg*46
```

For more information on NMEA data, refer to http://aprs.gids.nl/nmea/.

11.8 CAN ports

The DynaGATE 10-12 exposes the CAN ports as follows:

- CAN 0 port: `can0`
- CAN 1 port: `can1`

CAN ports are added through the SocketCAN kernel extension.
For further information on SocketCAN refer to the Linux kernel documentation:
www.kernel.org/doc/Documentation/networking/can.txt

11.8.1 How to enable the CAN bus 5V

To enable can0 5V, enter the following command:

```
gpio_utility gpio8 1
```

To enable can1 5V, enter the following command:

```
gpio_utility gpio9 1
```

11.8.2 How to setup a CAN port

To setup a CAN port, enter the following commands:

```
#Set CAN0 to work at 125 kbps
ip link set can0 type can bitrate 125000

#Open the connection
ip link set up can0
```

11.8.3 How to send/receive a message via a CAN port

Example: Sending/receiving a message via a CAN port (once the CAN port has been setup)

```
#Send a byte via CAN0
cansend can0 255

#Example of received message on can0
root@productname...:~# candump can0
interface = can0, family = 29, type = 3, proto = 1
<0x001> [1] 01
<0x001> [1] 02
<0x001> [1] 05
<0x001> [1] 00
<0x001> [1] ff
```

11.9 COM ports 0 and 1, Console port

The DynaGATE 10-12 exposes the COM ports as follows:

- COM port 0: `/dev/ttyS4` (available on the front panel)
- COM port 1: `/dev/ttyS3` (available on the front panel)
- Console port `/dev/ttyS0` (available in the Service Panel)

You need to configure the serial ports mode before they will work.

11.9.1 How to set the RS-232/485 modes

You can configure the serial port mode in the following ways, A or B:

A. Using the **ethsetserial** utility
B. Implementing the **ioctl** in the source code

11.9.1.1 How to use the ethsetserial utility to configure the COM ports

To set COM port 1 to RS-232 mode, enter the following command:

```
ethsetserial -p ttyO3 -m232
```

To set COM port 1 to RS-485 mode, enter the following command:

```
ethsetserial -p ttyO3 -m485
```

To see all the available options, enter the following command:

```
ethsetserial -h
```

11.9.1.2 How to implement the ioctl in the source code to configure the COM ports

To implement the ioctl in the source code, enter the following commands:

```
/*Ioctl to read */
#define TIOCGRS485                                0x542E

/*Ioctl to write */
#define TIOCSRS485                                0x542F
```

Definition of the flags bit

```
/*FLAGS */
//#define SER_RS485_ENABLED                  (1 << 0)

/* Logical level for RTS pin when sending */
//#define SER_RS485_RTS_ON_SEND              (1 << 1)

/* Logical level for RTS pin after sent*/
//#define SER_RS485_RTS_AFTER_SEND           (1 << 2)
//#define SER_RS485_RX_DURING_TX             (1 << 4)

/* Inverted logic level for RS485 gpio */
#define SER_RS485_INVERT                     (1 << 5)

/* if enabled serial line drivers must be configured in HiZ*/
#define SER_HIZ_ENABLED                      (1 << 31)
```

Linux kernel data structure

```
struct serial_rs485 {
      __u32   flags;                    /* RS485 feature flags */
      __u32   delay_rts_before_send;    /* Delay before send (milliseconds) */
      __u32   delay_rts_after_send;     /* Delay after send (milliseconds) */
      __u32   padding[5];               /* Memory is cheap, new structs
 };
```

Example: Configuring a serial port in RS-232 mode

`ser_port_name` can be either `/dev/ttyO3` or `/dev/ttyO4`.

```
struct serial_rs485 rs485conf;
unsigned int rs_mode_mask=(SER_HIZ_ENABLED|SER_RS485_ENABLED|SER_RS485_
INVERT|SER_RS485_RTS_ON_SEND|SER_RS485_RTS_AFTER_SEND);

unsigned int set_flags=0;
unsigned int set_flags_mask=rs_mode_mask;

int fd;
fd=open(ser_port_name,O_RDWR);
if (fd==-1)
{
/* process the error */
…
}

/* get serial port configuration */
if (ioctl (fd, TIOCGRS485, & rs485conf) < 0)
{
/* process the error */
…
}

rs485conf.flags&=~ set_flags_mask;
set_flags&=set_flags_mask;
rs485conf.flags|= set_flags;

/*set delay but not used in rs232 mode */
rs485conf.delay_rts_after_send=<delay after send in ms>;
rs485conf.delay_rts_before_send=<delay before send in ms>;

/* apply changes */
if (ioctl (fd, TIOCSRS485, & rs485conf) < 0)
{
/* process the error */
…
}
close(fd);
```

Example: Configuring a serial port in RS-485 mode

`ser_port_name` can be either `/dev/ttyO3` or `/dev/ttyO4`.

```
struct serial_rs485 rs485conf;
unsigned int rs_mode_mask=(SER_HIZ_ENABLED|SER_RS485_ENABLED|SER_RS485_
INVERT|SER_RS485_RTS_ON_SEND|SER_RS485_RTS_AFTER_SEND);

unsigned int set_flags=(SER_RS485_INVERT|SER_RS485_ENABLED|SER_RS485_RTS_ON_
SEND);
unsigned int set_flags_mask=rs_mode_mask;

int fd;
fd=open(ser_port_name,O_RDWR);
if (fd==-1)
{
/* process the error */
…
}

/* get serial port configuration */
if (ioctl (fd, TIOCGRS485, & rs485conf) < 0)
{
/* process the error */
…
}

rs485conf.flags&=~ set_flags_mask;
set_flags&=set_flags_mask;
rs485conf.flags|= set_flags;

/*set delays */
rs485conf.delay_rts_after_send=<delay after send in ms>;
rs485conf.delay_rts_before_send=<delay before send in ms>;

/* apply changes */
if (ioctl (fd, TIOCSRS485, & rs485conf) < 0)
{
/* process the error */
…
}
close(fd);
```

11.9.2 How to test a serial port

To test the serial port, use the microcom utility:

```
#connect ttyO3 with a baud rate of 9600
microcom /dev/ttyO3 -s 9600
```

The microcom utility:

- Allows you to transmit / receive data to / from the serial port
- Does not include a local echo (you cannot see the data sent).

11.10 Digital I/Os

The DynaGATE 10-12 exposes the Digital I/Os (GPIOs) as follows:

- Digital Input 1: `/sys/class/gpio/gpio26/value`
- Digital Input 2: `/sys/class/gpio/gpio27/value`
- Digital Output 1: `/sys/class/gpio/gpio87/value`
- Digital Output 2: `/sys/class/gpio/gpio89/value`

To manage these GPIOs, see "How to drive the GPIOs: the GPIO utility" on page 63.

11.11 LED indicators

The DynaGATE 10-12 exposes the LED indicators as follows:

- LED 1 (green): `/sys/class/gpio/gpio117/value`
- LED 2 (green): `/sys/class/gpio/gpio114/value`
- LED 3 (amber): `/sys/class/gpio/gpio115/value`
- LED 4 (amber): `/sys/class/gpio/gpio116/value`
- LED 5 (green): Reserved
- LED 6 (blue): Reserved

To manage these GPIOs, see "How to drive the GPIOs: the GPIO utility" on page 63.

11.12 Vehicle Ignition Sense

The DynaGATE 10-12 is provided with a Vehicle Ignition Sense on the Power supply connector (Pin# 3: KEY).

The Vehicle Ignition Sense is a digital input that can be used to monitor the ignition status

To read the Vehicle Ignition Sense status, enter the following command:

```
gpio_utility gpio30
```

The output is the following:

- If Pin# 3 is not connected, or connected to GND, then `value` = 1
- If Pin# 3 is connected to Power IN +, then `value` = 0.

11.13 Ethernet ports

The DynaGATE 10-12 exposes Ethernet ports as follows:

- Ethernet 0 port: `eth0`
- Ethernet 1 port: `eth1`

11.14 How to enable the 3.3V and 5V power supply on expansion connector

3.3V and 5V are OFF by default and are controlled driving specific GPIO's.

To control the 3.3V, enter the following commands:

```
#turn on 3.3V
gpio_utility gpio71 1

#turn off 3.3V
gpio_utility gpio71 0
```

To control the 5V, enter the following commands:

```
#turn on 5V
gpio_utility gpio70 1

#turn off 5V
gpio_utility gpio70 0
```

NOTICE

While the default kernel DTB allows access to these power control pins, depending on the device tree used, control of these power supplies is handled by the kernel and therefore it may not be possible to control them from user space.

11.15 RTC

The DynaGATE 10-12 exposes the RTC as follows:

- RTC: `/dev/rtc1`

`/dev/rtc1` offers three read-only timestamp registers:

Timestamp register	What it contains
sys/class/rtc/rtc1/device/timestamp1	Reserved data
sys/class/rtc/rtc1/device/timestamp2	The timestamp that the system last lost power (only if a successful initialization has been achieved)
sys/class/rtc/rtc1/device/timestamp3	The timestamp that the system last has been powered (only if a successful initialization has been achieved)

To read a timestamp (for example: timestamp2), enter the following command:

```
cat /sys/class/rtc/rtc1/device/timestamp2
```

11.16 Watchdog

The DynaGATE 10-12 exposes the watchdog as follows:

- Watchdog: `/dev/watchdog1`

11.16.1 How to manage the watchdog using the C programming language

To manage the watchdog using the C programming language enter the following commands:

```
Int interval;
Int bootstatus;
Long value;

/* display current watchdog value */
If (ioctl(fd,WDIOC_GETTIMEOUT,&interval)==0)
{
   // interval contains current timeout in seconds
}

/* Check if lasdt boot is caused by watchdog */
If (ioctl(fd,WDIOC_GETBOOTSTATUS,&bootstatus)==0)
{
   //bootstatus <> 0 Watchdog
   //bootstatus = 0 Power-on reset
}

/* set the watchdog value (for example: 30 seconds) */
value=30;
If (ioctl(fd,WDIOC_SETTIMEOUT,&value)==0)
{
   //Watchdog has been set to value content
}

/* stop the watchdog */
write(fd,"V",1);

/* feed the watchdog */
ioctl(fd,WDIOC_KEEPALIVE,0);
```

11.16.2 How to manage the watchdog from the command line

To set the watchdog value (for example: 30 seconds), enter the following command:

```
wdt_setup -d /dev/watchdog1 -t 30
```

To start and feed the watchdog, enter the following command:

```
echo 1 > /dev/watchdog1
```

To stop the watchdog, enter the following command:

```
echo V > /dev/watchdog1
```

11.16.3 For further information

For further information on Linux support for watchdog, see:
www.kernel.org/doc/Documentation/watchdog/watchdog-api.txt

11.17 Accelerometer

The DynaGATE 10-12 is provided with an accelerometer sensor.

To print the information from the accelerometer, including an update every time movement is detected, use the following command:

```
evtest /dev/input/event0
```

Example output:

```
Input driver version is 1.0.1
Input device ID: bus 0x18 vendor 0x0 product 0x159 version 0x0
Input device name: "ADXL34x accelerometer"
Supported events:
Event type 0 (Sync)
Event type 1 (Key)
Event code 330 (Touch)
Event type 3 (Absolute)
Event code 0 (X)
Value 0
Min -4096
Max 4096
Fuzz 3
Flat 3
Event code 1 (Y)
Value -8
Min -4096
Max 4096
Fuzz 3
Flat 3
Event code 2 (Z)
Value -262
Min -4096
Max 4096
Fuzz 3
Flat 3
Testing ... (interrupt to exit)
Event: time 1325419699.822493, type 3 (Absolute), code 2 (Z), value -254
Event: time 1325419699.822493, -------------- Report Sync ------------
Event: time 1325419699.863461, type 3 (Absolute), code 2 (Z), value -263
Event: time 1325419699.863461, -------------- Report Sync ------------
Event: time 1325419699.904445, type 3 (Absolute), code 2 (Z), value -265
Event: time 1325419699.904445, -------------- Report Sync ------------
Event: time 1325419699.945433, type 3 (Absolute), code 2 (Z), value -263
Event: time 1325419699.945433, -------------- Report Sync ------------
Event: time 1325419700.109388, type 3 (Absolute), code 2 (Z), value -264
Event: time 1325419700.109388, -------------- Report Sync ------------
Event: time 1325419700.232362, type 3 (Absolute), code 2 (Z), value -263
Event: time 1325419700.232362, -------------- Report Sync ------------
```

11.18 Internal temperature sensor

The DynaGATE 10-12 is provided with a sensor that measures the temperature inside the product.

To read the internal temperature, enter the following command:

```
cat /sys/class/hwmon/hwmon0/temp1_input
```

11.19 The Programmable pushbutton

The programmable pushbutton is sensed by a Linux daemon which executes a shell script every time the button is either pushed or released. This script is located at `/usr/bin/switch_script.sh` and can be customized according to the needs of the user.

To see the pushbutton status, enter the following command:

```
gpio_utility gpio74
```

The output is the following:

- If the button is being pushed, then `value` = 0
- If the button is not being pushed, then `value` = 1.

11.20 TPM

The DynaGATE 10-12 includes a TPM 2.0 hw module (Infineon SLB9670).

12 How to log in the Administration Console

This section describes how to enter the Administration Console to access the DynaGATE 10-12 Linux Operating System.

To login the Administration Console, use one of the following methods:

- Direct login via Console Port
- Remote login via Secure Shell (SSH)

12.1 The default credentials

The default credentials are the following (case sensitive):

- Username: **root**
- Password: **eurotech**

12.2 How to login using the Console port

To log in using the Console port, complete the following steps:

1. Connect the USB-to-Serial cable adapter[1] between your development PC and the Console connector of the DynaGATE 10-12
2. Start a terminal emulator program on your development PC (for example TeraTerm on Windows, Minicom on Linux). Configure the serial port connection for: 115200, 8 bits, 1 stop bit, no parity, and no flow control
3. At the Linux prompt, enter your credentials (see "The default credentials" above).
   You will obtain a video output like the following:

```
root
Password:
root@productname...:~#
```

12.3 How to login via Secure Shell (SSH)

The default (out-of-the-box) network configuration of your DynaGATE 10-12 is as follows:

- **eth0**
  - Status: Enabled for LAN
  - Configure: Manually (Static IP)
  - IP Address: 172.16.0.1
  - Subnet Mask: 255.255.255.0
  - DHCP Server Enabled
- **eth1**
  - Status: Enabled for WAN
  - Configure: DHCP (DHCP client)
- **wlan0**
  - Status: Disabled

12.3.1 How to login via the eth0 port

DynaGATE 10-12 eth0 port is configured with the static IP address: 172.16.0.1/24.

To log in using eth0, complete the following steps:

[1] This cable adapter has an end provided with a Male USB connector type A, and the other end provided with a 3-pin, 1.25 pitch, female receptacle housing. Contact Eurotech for further information.

1. Enter the command `ssh root@172.16.0.1`
2. At the prompt, enter the password (see "The default credentials" on the previous page).

12.3.2 How to login via the eth1 port

DynaGATE 10-12 eth1 port is configured in DHCP client mode.

You have to know its IP address before you can log in, or you have to use a zeroconf implementation.

NOTICE

By default the DynaGATE 10-12 runs a zeroconf implementation.
You can detect the IP address of the unit remotely by running the command: `avahi-discover`.

Example:

1. **Run the command: `avahi-discover`. A dialog box pops-up reporting all the devices on your network that support this mechanism**
2. **Under "eth0 IPv4" > "local" > "Workstation", you should see your product's hostname (example: productname_serialnumber). Select it to see its IP address**
3. **Log in your Reliagate using: `ssh root@productname_serialnumber.local`**
4. **At the prompt, enter the password: (see "The default credentials" on the previous page).**

12.4 How to change your security settings

For security reasons, Eurotech recommends you to change the Linux 'root' password after your initial setup.

To change your Linux password, complete the following steps:

1. Login using the console port
2. Run the `passwd` command and enter a new ‘root’ account password

13 HOW TO COMPILE CUSTOM SOFTWARE

13.1 How to set up the toolchain

1. Make sure you're using the correct toolchain version corresponding to the Yocto image installed on your gateway.
   The latest toolchain and Yocto image for your DynaGATE 10-12 are available here:
   https://eurotech.github.io/linux-releases/

2. Download the binary file (x86_64 version tested) on a Virtual/physical machine running Ubuntu (14.04 tested), execute it and select appropriate installation options
3. Once the installation is complete, switch to superuser (`sudo su`)
4. To setup the correct environment variables, run:

```
source /opt/poky/2.3.2/environment-setup-cortexa8hf-neon-poky-linux-gnueabi

cd /opt/poky/2.3.2/sysroots/cortexa8hf-neon-poky-linux-gnueabi/usr/kernel

make scripts
```

5. Exit superuser mode

13.2 How to use the toolchain to compile custom software

1. Setup the environment variables using:

```
source /opt/poky/2.3.2/environment-setup-cortexa8hf-neon-poky-linux-gnueabi
```

2. To directly compile a user-space C source file `hello_world.c`, use

```
$CC hello_world.c
```

3. To compile a kernel module `kernel_module.c`, configure your Makefile to point to the kernel directory and include the `.config` file in the kernel directory. Here's an example of Makefile:

```
KBLD := /opt/poky/2.3.2/sysroots/cortexa8hf-neon-poky-linux-gnueabi/usr/kernel -
include $(KBLD/.config)
obj-m :=kernel_module.o
all : modules
modules clean :
$(MAKE) -C $(KBLD) M=$(PWD) $@
```

(This page has been intentionally left blank)

14 EUROTECH EVERYWARE IOT

Eurotech Everyware IoT is a combination of hardware, firmware, operating systems, programming frameworks, and cloud platforms. It enables you to layer you added-value components on a reliable ready-to-use infrastructure, dramatically accelerating the time to market of your IoT projects.

14.1 Everyware Software Framework (ESF)

Everyware Software Framework (ESF) Edge Computing Platform is a high-level, multi-platform and flexible application development environment.

ESF is a smart application container that enables remote management of IoT gateways and provides a wide range of APIs allowing you to write and deploy your own IoT application.

ESF allows the connection and communication with field devices (close to data sources), thanks to already tested libraries for field protocol communication, the visual IoT Edge Computing applications development and the connection with leading IoT Cloud Services such as Everyware Cloud (Eurotech IoT Integration Platform) , Eclipse Kapua, AWS IoT and Microsoft Azure IoT.

ESF runs on top of the Java Virtual Machine (JVM) and leverages OSGi (a dynamic component system for Java) to simplify the process of writing reusable software building blocks.

ESF APIs offer:

- easy access to the underlying hardware including: serial ports, positioning, watchdog, USB, GPIOs, I2C, etc.
- OSGi bundles to simplify the management of network configurations, the communication with IoT servers, and the remote management of the gateway.

ESF is based on Kura, the popular Eclipse open source project that was originally contributed to the Eclipse community by Eurotech.

14.2 The ESF Web UI

ESF provides a web-based user interface: **ESF Web UI**.

The ESF Web UI provides several functionalities such as:

- Monitor the gateway status
- Manage the network configuration
- Oversee the installed application(s) and services.

The ESF Web UI is available on port 80 of the gateway IP.

The default user is: *admin*
The default password is: *admin.*

The following picture shows an example of the ESF Web UI:

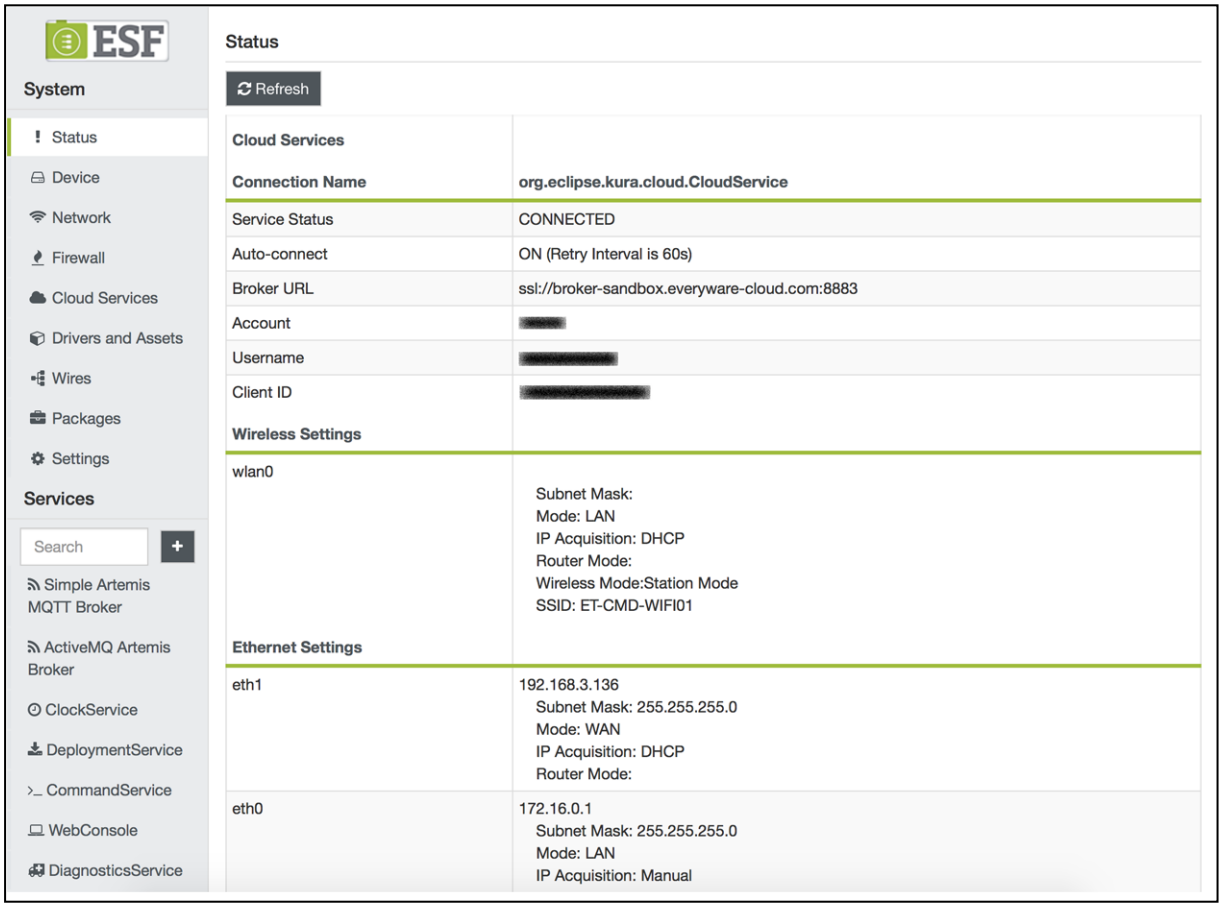

14.3 The ESF Wires Application

ESF provides also a dataflow programming model: **Wires**.

Wires simplifies the development of Edge Computing Applications leveraging reusable configurable components.

In the dataflow programming model, the application logic is expressed as a directed graph (flow) where each node can have inputs, outputs and independent processing units.

The processing unit of a node executes independently and does not affect the execution of other nodes. Thus, the nodes are highly reusable and portable.

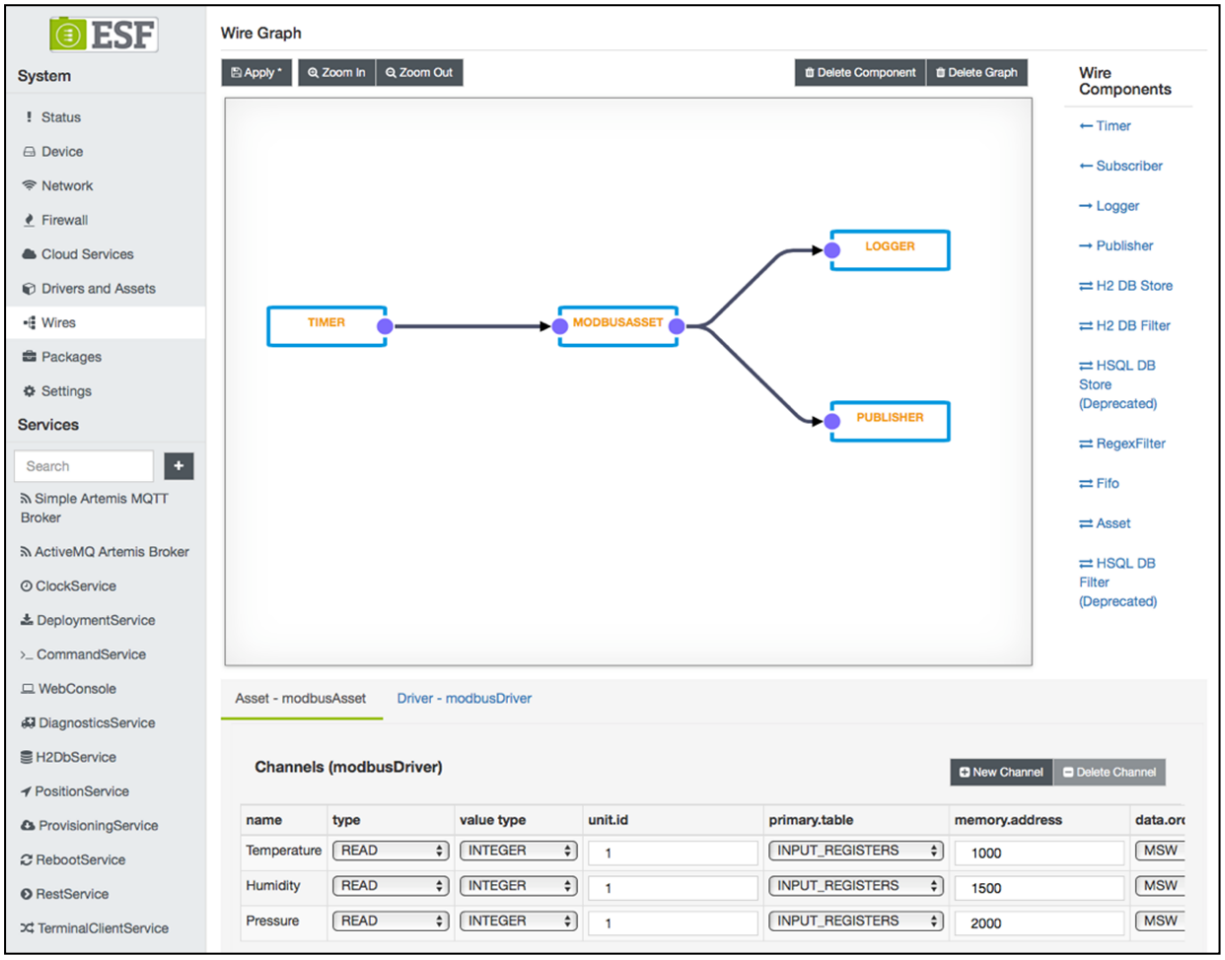

14.4 Everyware Cloud (EC)

Eurotech's Everyware™ Cloud (EC) is an IoT Integration Platform that simplifies system and data management by connecting distributed devices over secure and reliable cloud services.
Everyware Cloud allows you to connect, configure and manage devices through all the lifecycle, from deployment through maintenance to retirement.

With EC you can:

- Connect any sensor, device or asset to the platform to quickly create new IoT scenarios
- Dynamically and remotely create and add new services and functions to your field devices
- Configure the platform to analyze data in real-time and trigger immediate alerts
- Leverage a device-specific message-oriented infrastructure for fast and easy creation of reliable, device-independent IoT applications
- Integrate MVNO Connectivity Platforms to have a single point of management of Connected Devices and associated SIM cards
- Enable IoT Analytics through built-in connectors to on-line Dashboards and Analytical Reports
- Enable IoT Business Application Integrations through native REST APIs

14.5 For further information

For further information and tutorials about ESF and EC, refer to the following links:

Information	Available at
ESF Website	esf.eurotech.com
ESF Download	www.eurotech.com/download/en/pb.aspx?pg=ESF (click the *Developer Environment* tab)
EC Integration Platform	www.eurotech.com/en/products/software+services/everyware+cloud+m2m+platform
EC Developer's Guide	everywarecloud.eurotech.com/doc/ECDevGuide/
Kura Website	eclipse.org/kura/

15 MECHANICAL SPECIFICATIONS

15.1 Product mechanical dimensions

The product electronics are housed in an aluminum alloy enclosure having the following dimensions: 139 (L) x 118 (W) x 52 (H); mm - Antennas Connectors and Mounting Bracket included.

All dimensions are in millimeters.

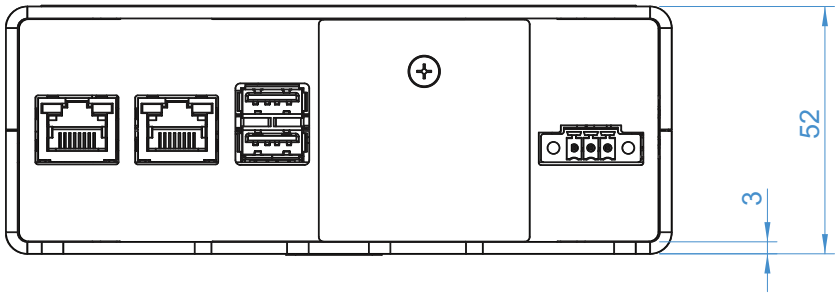

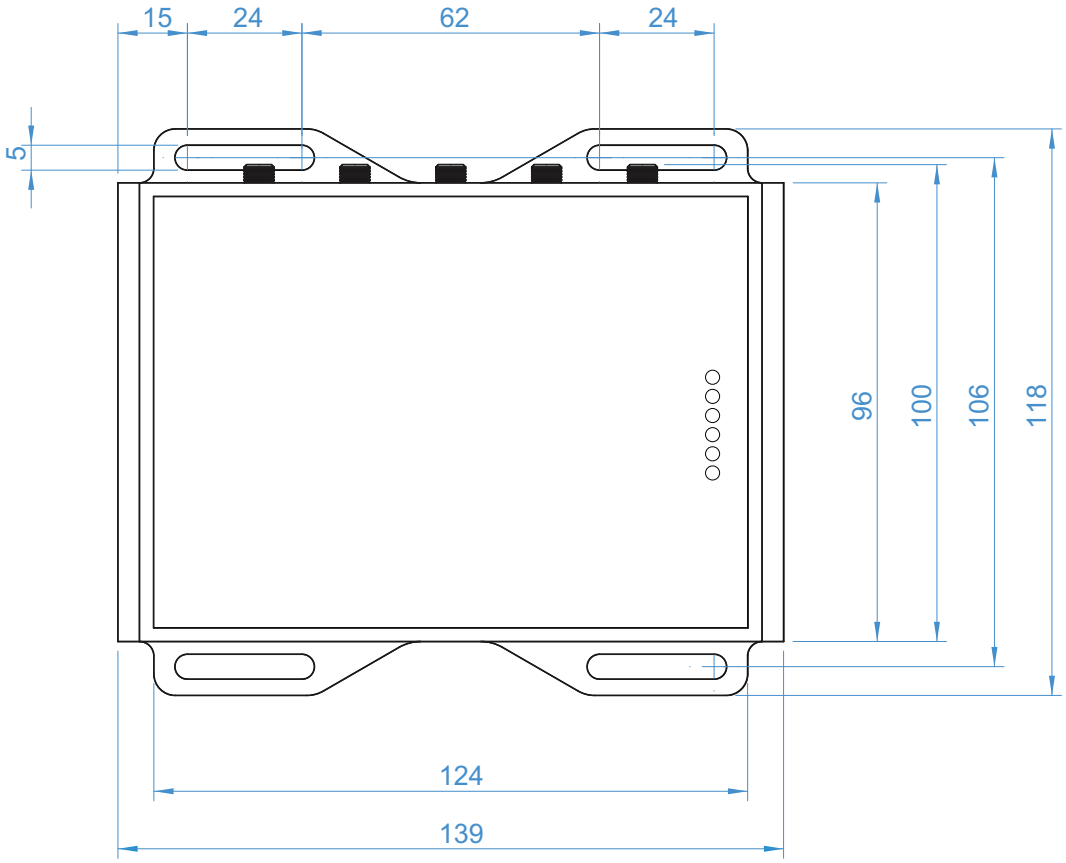

(This page has been intentionally left blank)

16 HOW TO INSTALL THE PRODUCT

NOTICE

This product must only be installed by qualified personnel.
Install this product in a secured location, only accessible to authorized personnel (for example in a cabinet / technical compartment).

16.1 Comply with safety instructions, norms and certifications

Always comply with the information and instructions contained in the following sections:

- "Safety instructions" on page 7
- "Norms and certifications" on page 23

16.2 How to install the product using the integrated Mounting Bracket

To install the product in place, add all the necessary mounting hardware to safely secure the product in place according to your installation requirements (for example use 4x M5 screws).

Material and length of the screws, and the maximum torque applicable, depend on your installation requirements.

The integrated Mounting Bracket is made of 2 mm aluminum alloy 5052.

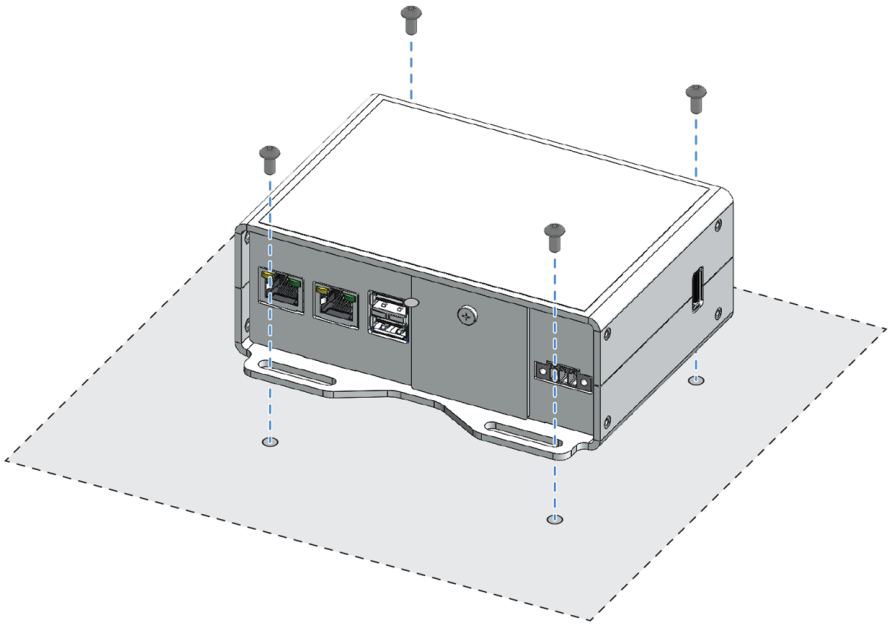

(This page has been intentionally left blank)

17 HOW TO MAINTAIN THE PRODUCT

Periodically inspect the product to verify its integrity and to ensure proper operation.

To maintain the product, complete the following steps:

1. Carefully read and understand the instructions contained in the section "Safety instructions" on page 7
2. Prevent electrostatic discharge
3. Remove the power supply
4. Verify the installation of the product
5. Clean the product

17.1 How to prevent electrostatic discharge

NOTICE

HOW TO PREVENT DAMAGING ELECTROSTATIC-SENSITIVE DEVICES

The symbol on the left is applied on electrostatic-sensitive devices.

To prevent damaging electrostatic-sensitive devices:

- **Handle the electrostatic-sensitive devices in an ESD Protected Area (EPA)**
- **Observe the appropriate antistatic precautions. For example: use a wrist strap kept in constant contact with bare skin and attached to ground.**

17.2 How to safely remove the power supply

To safely remove the power supply from the product, complete the following steps:

1. ALWAYS make sure your hands are dry before performing any cables disconnection
2. ALWAYS remove all the power supply sources
3. ALWAYS disconnect all the cables
4. ALWAYS make sure that all the circuits are discharged

Failure to follow the steps above, may create an electric shock hazard, which could result in personal injury or loss of life, and / or damage to equipment or other property

17.3 How to verify the installation of the product

To verify the installation of the product, complete the following steps:

1. Verify that the product is clean and not damaged
2. Verify that the LED indicators are visible and not damaged
3. Verify that all the screws, bolts, nuts are correctly fastened
4. Verify that the product is installed correctly.

17.4 How to clean the product

To clean the product, complete the following steps:

1. Never use detergents, aerosol sprays, solvents or abrasive sponges
2. To remove dust from the case of the product, use a dry, lint-free, cloth
3. To remove the dirt, use water-based, non-flammable, cleaner products.

(This page has been intentionally left blank)

NOTES

EUROTECH

EUROTECH.COM

HEADQUARTERS

Via Fratelli Solari, 3/a
33020 Amaro (UD) - Italy
Tel: +39 0433.485.411
Fax: +39 0433.485.499
Email: welcome@eurotech.com
Web: www.eurotech.com

For your Eurotech local contact refer to: **eurotech.com/contacts**

For the Eurotech Global Support Centre refer to: **support.eurotech.com**

For the Eurotech Download Area refer to: **eurotech.com/download**

All trademarks, registered trademarks, logos, trade names and products names contained in this document are the property of their respective owners.