WANHUA

WH868 Car Alarm System

WANHUA

USER'S MANUAL

Manufacturer:Wanhua Technology Co.,Ltd
Http://www.wanhua.com

INDEX

Icons Description ---------- 01
Buttons Operation Instruction --------- 04
Lock (Alert ON) ---------- 05
Unlock (Alert OFF) ---------- 05
Auto Lock/Unlock (Auto Door) -------- 06
Starter and Reservation ---------- 07
Trunk Release ---------- 10
Query Function ---------- 10
Anti-hijacker ---------- 11
Mute ON/OFF ---------- 12
Valet ON/OFF ---------- 12
Shock Sensor ON/OFF ---------- 13
Auto Lock After Running ---------- 13
Passive ---------- 14
Timer Starter (Timer) ---------- 15
Engine Maintenance (TURBO) ------- 15
Owner Caller ---------- 16
Password to Unlock ---------- 16
Shocked/Stolen Indicate ---------- 18
Optional Functions ---------- 19
Gas Out for Gas Car ---------- 20
Limited Lifetime Consumer Warranty -21

Icons Description

Turbo ▲ Engine keeps running 2 minutes after car key is drew out, this can protect the engine.

Timer ▲ Timer to start the engine at a set time every day. (reservation needed for manual car)

Auto ▲ Automatically unlock when pager near the car, and lock when far away from the car.

Passive ▲ After engine is shut, the door was closed but not locked, the car will automatically be locked after 30 seconds.

Icons Description

- Valet ON (still can press I to Lock/Unlock)
- Car is shocked/stroke
- Someone is calling owner
- Trunk released
- Start remotely
- Battery life
- Pager is working
- Door is open
- Locked
- Unlocked
- Parking lights are flashing
- Siren ON
- Shock sensor ON

One-way Pager

🔒 / 🔓 (I)	Lock/Unlock
🔑/● (II)	Starter/Stop
🚗 (III)	Trunk Release
? (IV)	Query
🔒 / 🔓 +🔑/●	Mute ON/OFF
🔒 / 🔓 + 🚗	Valet ON/OFF

Buttons Operation Instruction

Button	Press Duration	Explanation
I	0.5s	Lock (Alert ON)/Unlock (Alert OFF)
I -	2s	AUTO Door
II -	2s	Remote start
III -	2s	Trunk Release
IV	0.5s	Query Function
IV -	0.2s	Anti-hijacker (Sound lasts 1'30")
I+ II	0.5s	Mute ON/OFF
I+I I I	0.5s	Functions stop ON/OFF (Press I still can lock/unlock)
(I+I I I) -	2s	Shock Sensor ON/OFF
I+I V	0.5s	Automatically lock after running ON/OFF
I I+I I I	0.5s	Automatically Alert/Manual Alert
I I+I V	0.5s	Timer starter
I I I+I V	0.5s	TURBO ON/OFF
Owner Caller		Someone is looking for the owner
Shocked/Stolen		Car is shocked or opened by force
Emergent Light		Lamp lights when open the door

NOTE:

0.5s: Press the button will do

+ / (+)-: Press the two buttons simultaneously/Press simu-ltaneously until the car and pager has reaction

ON/OFF: Repeatly press will switch the status.

Lock (Alert ON)

After locked, the car is in alert ON status.

Alert: when in alert status, if the door is opened by force, siren and parking light will work 30 seconds.

Shocked: After the car is in alert status 30 seconds, if the car is shocked, siren and parking light will work 9 seconds.

Unlock (Alert OFF)

When in alert ON status, unlock will dismiss the alert ON status.

User can judge the car is ok or not by following indicates:

Bi, Bi: the car is ok

Bi, Bi, Bi, Bi,: the car is shocked or the door is opened by fore during the car is parking.

NOTE:

When the car is shocked or stolen, siren and parking light will work, press I first to stop siren, and press I again to disalarm.

Auto Door

The car will be locked automatically when the pager leaves the car, and unlocked when near the car. If repeatly try, the reaction time is 10 seconds.

NOTE:

When the pager is within the valid range, the lock/unlock icon will appear and disappear repeatly.

I– Auto Door

When being locked:

When being unlocked:

NOTE:

When stop AUTO function, the system will be automatically switched to Automatic/Manual Alert function, refer to (II+III).

II– Starter ON/OFF

With a Bi sound and the parking light flashes one time, the engine will be started. If still not success after three times, then it will stop trying.

This icon will flash during the start (15/25 minutes)

It means the battery life remain, each bar means 25% of the running time.

1. When in the start duration (15/25 minutes), press II 2 seconds will stop the start.
2. Press I to open the car, if not insert the car key within 20 seconds, engine will stop.

Remarks

If the door is open or the reservation for manual car is canceled, siren sounds Bi, Bi, Bi, and parking light flashes three times, it means the start fail.

■ **Reservation for Manual Car:**

Reservation is a safe set to prevent the car to run when remotely started, because the start function needs the car in a certain gear.

■ **Manual Reservation:**

Be sure to put the vehicle in NEUTRAL gear, then draw out the car key, get off and close the door, reservation will be ok. During this time, the engine will keep running 2 minutes, then stop running.

NOTE

As to the auto vehicles, only in P or N gear, it can be remotely started.

■ **Cancel Reservation:**

After stop the car and draw out the car key, if the engine keeps running, it means the car is in reservation status. Press II 2 seconds, the engine will stop, and the reservation is canceled, when stop the car in the slope, please use this way to cancel the reservation.

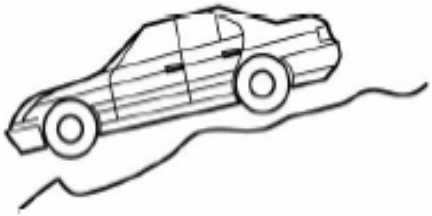

When in reservation status, any open/close door action after starter or open trunk will cancel the reservation.

■ **Ways to Judge the fail starter:**

If something wrong with starter, parking light and siren will work 3 times, after 2 seconds, user can judge the problem by the flash of parking light.

Parking light flashes times	Check items
One time	In start status
Two times	Key is in ON position
Three times	Door is open
Four times	Trunk is open
Five times	Reservation is canceled (manual car)

III– Trunk Release

Lever-type trunk can not be remotely controlled to open.

NOTE:

1. When open trunk, door will be unlocked meanwhile.
2. If connect the trunk induction wire of the manual car, when remote control to release trunk, the reservation will be canceled. Let user to know this when install the manual car.

IV Query Function

User can judge the status of the car by press this key, and the system will show the following indicates:

1. **Pager:**
   If in alert ON, Bi, Bi, Bi sounds show the start function is OFF
   If in alert OFF, Bi, Bi sounds show the start function is OFF
   If in alert ON, Bi Bi, Bi Bi, Bi Bi sounds show the start function is ON
   If in alert OFF, Bi Bi, Bi Bi sounds show the start function is ON
   Alert ON: car is locked
   Alert OFF: car is unlocked

2. **Vehicle:**
   If in alert ON, Bi sound shows the start function is OFF
   If in alert OFF, Bi, Bi sounds show the start function is OFF
   If in alert ON, Bi, Bi, Bi sounds show the start function is ON
   If in alert OFF, Bi, Bi, Bi, Bi sounds show the start function is ON

NOTE:
when receive the above confirm sounds, it means the pager is in the valid communication range.

IV– Anti-hijacker

NOTE:

Even in mute ON status, if this function is activated, the siren will chip 90 seconds. In this anti-hijacker status, the door will be locked without condition, and the engine will be stopped automatically.

REMARKS:

This function is only used when emergent (such as when user feels threat existing). If want to stop this function, press I 0.5s to stop.

I+II Mute ON/OFF

With this icon disappears, the system is in mute on status, but the siren will still work at following happens:

1. Car door is opened by force, the car will siren without condition.
2. When user sets the car in anti-hijacker function.

I+III Valet ON/OFF

All functions will be stopped, but user still can press I to lock /unlock.

NOTE:

When user lend the car to others or have it served, it is useful.

I+III– Shock Sensor ON/OFF

When LCD shows this icon, it means the shock sensor won't work, if no this icon, the shock sensor works, it is used when user do not want it, for example: rest in the car, there is pet in the car.

I+IV Auto Lock after Running

After close the door, and 30 seconds after starting the car (KEY ON), door will automatically locked.

The door can not be locked in following occasions:

1. Start the car but not close the door
2. During the 30 seconds after start, open the door and close it again.

3. Run the car after remote start.
4. In start status, draw out the key, then it will unlock automatically.

II+III Passive

Passive When LCD shows this icon, the car will be locked within 30 seconds automatically in the following occasions:

1. Open the door and then close it;
2. When the door is closed, after unlocked it;
3. In these occasions, the pagers should be taken with the owner.

■ **Automatically lock timely**

1. For manual car: after reservation, just open and close the door.
2. In Turbo ON: drew out the key, just open and close the door.

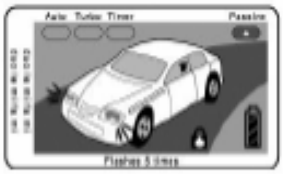

Passive If this icon disappear, use pager to lock/unlock

II+IV Timer starter (Timer)

When user wants to start the engine at a time everyday, then can set this function, the starting will last 15/25 minutes, for the manual vehicle, reservation needed first.

For example: set this function at 8:00 A.M., then it will start at next 8:00 A.M.

III+IV Engine Maintenance (TURBO)

NOTE:

1. Even the key is drew out or open/close the cloor, the engine will keep running within 2 minutes
2. This function is for the engine to emanate the heat, very useful after running long or in hot weather.
3. To cancel this function, press III+IV 0.5 seconds after engine stops.

Basic function

when the door is opened by force, pager will give out 30 seconds continuous alarm sounds, while if the owner doesn't hear this, the pager will sound every 2 seconds.

Owner Caller

If someone is looking for the owner, just knock the Owner Caller sensor, which is located in the down left to the windshield, then the pager will indicate with a 4 rings.
Owner can press IV 0.5 seconds to react, the parking light and siren will work one time to show the calling is received.

Password to Unlock

This function is set to unlock the door when without pager.
It is a 4-number password and each number should be 1 to 9.

Setting:

- Place the key in ON or the open the door, knock the owner caller sensor 10 times continuously. (for each knock, the green indicator will flash one time to show the knock is valid).

- After that, the indicator will flash accelerately (now the indicator will change to red).
- During the flash, set the number as like, the number is equal to the times to knock continuously, e.g.: if want to input 5, then knock 5 times, the interval should be less than 1.5 seconds.
- When finish setting one number, after 1.5 seconds, indicator shows the times input. To set other numbers just repeat the above steps.
- When set is finished, the parking light will flash one time.

Password to Unlock:

- Knock the caller sensor 10 times continuously. (for each knock, the green indicator will flash one time to show the knock is valid).
- After that, the indicator will flash accelerately (now the indicator will change to red).
- During the flash, knock the sensor according the first number of the set password e.g.: if the number is 5, then knock 5 times, the interval should be less than 1.5 seconds.
- When finish one number, after 1.5 seconds, indicator shows the times input. To knock the rest numbers, just repeat the above steps.
- If the input numbers are same as set, then the door will unlock and the pager gives out a sound to confirm.

NOTE:

1. If fail to input 5 times within 30 minutes, then this function won't work within 24 hours
2. If the input number is not correct, the input times will be canceled within 30 minutes. (only 5 times can be done within 30 minutes; if use pager to unlock, the times also will be canceled).
3. During knocking, if give up, then the pager will show Owner calling.

■ Shocked Indicates

This shows car is shocked or stroke.

■ Stolen Indicates

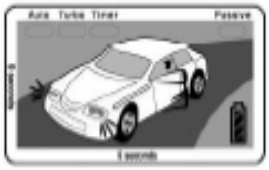

When the door is opened by force, the system will siren even in MUTE ON status.

■ Optional Functions

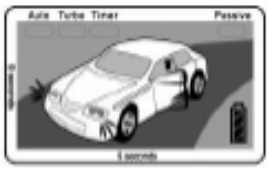

■ Warning for car giving off electricity (option)

If locking the door with rear lights lighting, pager will give out sound to warn this and the battery icon in LCD flashes.

■ Trunk Release

In alert ON status, open the trunk by force will cause 30 seconds alarm sounds.

■ Start Kill (option)

For this function, if the door is opened by force, even pager or key cannot start the car.

■ **Indicate door is open (option)**

When door is open, parking light will indicate owner the door is open (optional).

■ **Gas Out for Gas Car**

For Auto Vehicle:

When engine is running, shut gas valve first to gas out the rest and then stop the engine.

When use TURBO, turn the key to OFF, and shut gas valve fist, get off and close the door, the rest gas will be out within 2 minutes, after that engine will stop automatically.

NOTE:

For Manual vehicle, or auto vehicle using TURBO, just only draw out car key and do not shut the gas valve, the rest gas will be out within 2 minutes, after that engine will stop automatically.

- **Limited Lifetime Consumer Warranty**

  Wanhua Technology Co., Ltd warrants to the original purchaser that this product shall be free of defect in material and workmanship under normal use and circumstances for the period of time that the original owner of this product owns the vehicle in which it is installed, except that the remote controller unit for the period of one year from the date of installation to the original owner of this product.

- When the original purchaser returns the product to the retail store where it was purchased within the warranty period, and if the product is defective, Wanhua Technology Co., Ltd. will at its option repair or replace such.

- TO THE MAXIMUM EXTENT ALLOWED BY LAW, ANYAND ALL WARRANTIES ARE EXCLUDED BY THE MANUMFACTURER AND EACH ENTITY PARTICIPATING IN THE STREAM OF COMMERCE THEREWITH.

  THIS EXCLUSION INCLUDES BUT IS NOT LIMITED TO, THE EXCLUSION OF ANY AND ALL WARRANTY OF MERCHANTABILITY AND/OR ANDY AND ALL WARRANTY OF FITNESS FOR A PARTICULAR PURPOSE AND/OR ANY AND ALL WARRANTY OF NON-INFRINGEMENT OF PATENTS, IN THE WORLD.

- NEITHER THE MANUFACTURER OF ANY ENTITIES CONNECTED THEREWITH SHALL BE RESPONSIBLE OR

WANHUA

WH868 Car Alarm System

WANHUA

Installation Guide

INDEX

Wiring Diagram 01

Central Lock Installation 03

Anti-hijacker Installation 06

Pager Learn Routine 07

Notice For Installer 08

Adjustment 09

Trouble Shooting 10

Limited Lifetime Consumer Warranty .. 12

Guarantee Card 14

WIRING DIAGRAM

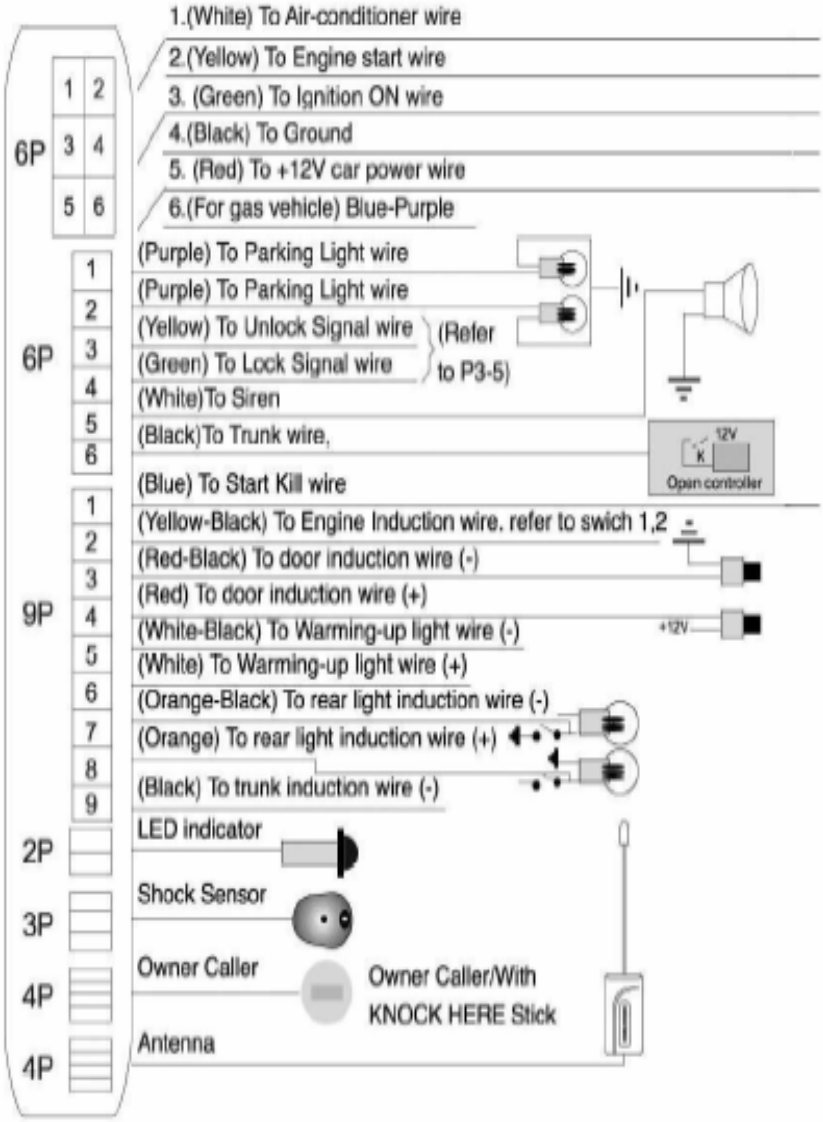

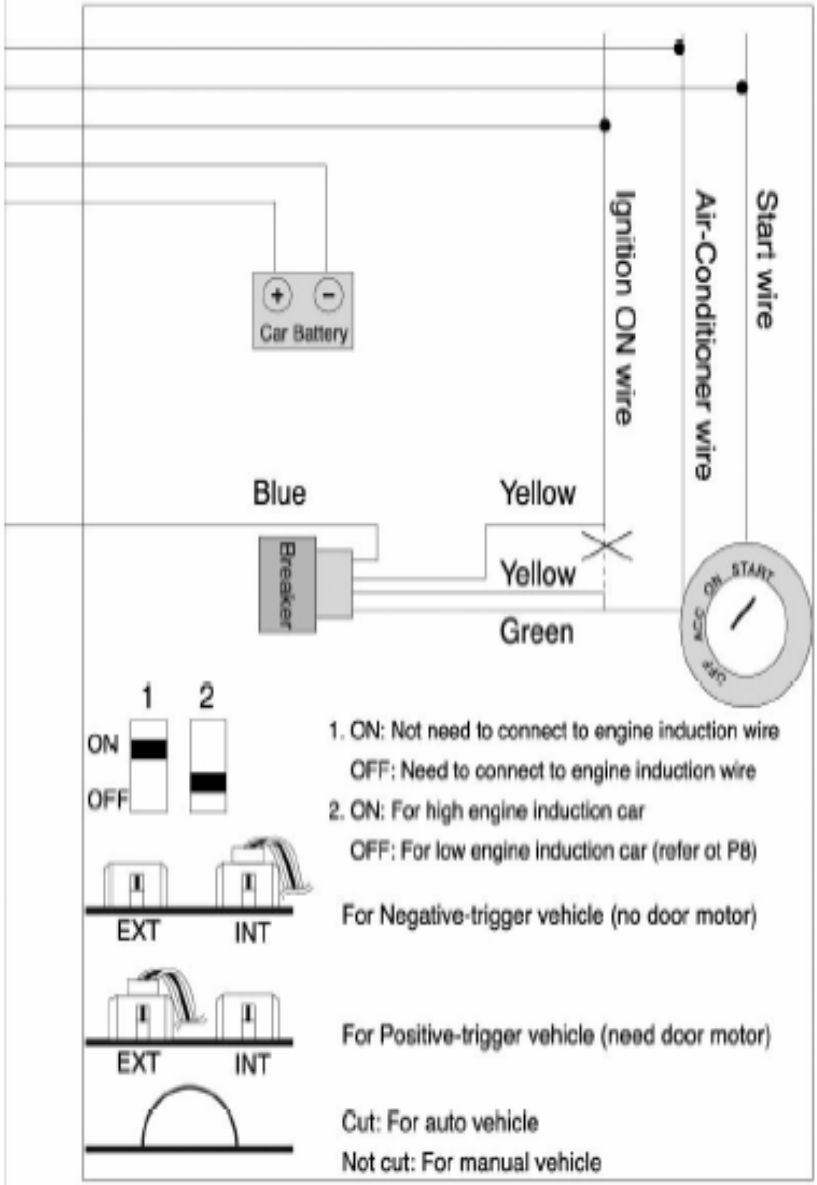
Ignition ON wire
Air-Conditioner wire
Start wire
Car Battery
Blue
Yellow
Yellow
Green
Breaker
ON
START
ACC
OFF
1
2
ON
OFF
1. ON: Not need to connect to engine induction wire
OFF: Need to connect to engine induction wire
2. ON: For high engine induction car
OFF: For low engine induction car (refer ot P8)
EXT
INT
For Negative-trigger vehicle (no door motor)
EXT
INT
For Positive-trigger vehicle (need door motor)
Cut: For auto vehicle
Not cut: For manual vehicle

Central Lock Installation:

Installer should first judge the type of the central lock, then select one of following 3 ways to wire the central lock.

■ **For the Negative Trigger Central Lock:**

This type of central lock is originally installed inside the car, and the motor is installed inside the door.

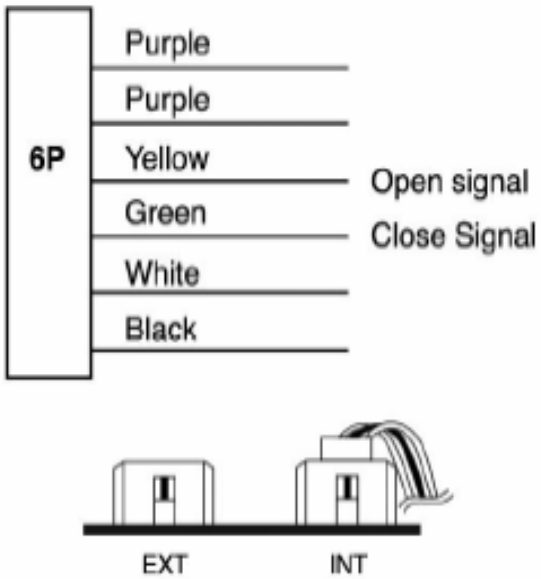

NOTE:

For this kind of central lock, the socket should be inserted to INT position.

■ For Positive Trigger Central Lock :

This type of central lock is originally installed inside the car, but only a switch inside the door, an additional two-wire motor needs to add.

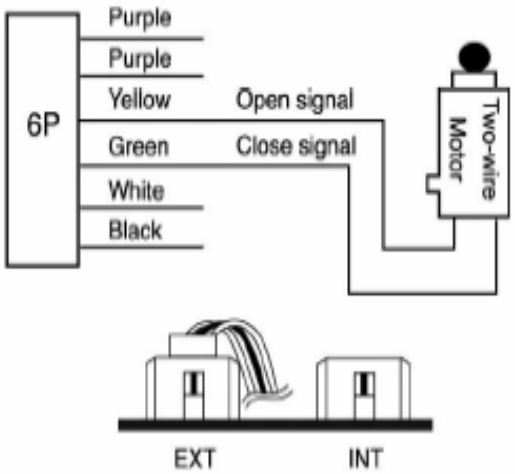

NOTE:

For this kind of central lock, the socket should be inserted to EXT position.

For Pneumatic Lock:

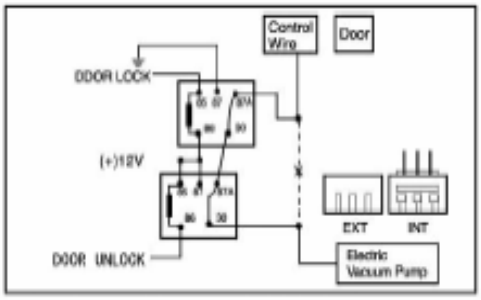

When work by vacuum pump, 2 additional relays are needed, and the output pulse time is 3.5 seconds (the time can be adjusted, refer to Optional Function Install)

When Locked, it is LOW, when unlocked, it is HIGH.

Connect DOOR UNLOCK, DOOR LOCK, and insert the control wires into INT socket in the main brain.

For Pneumatic Lock:

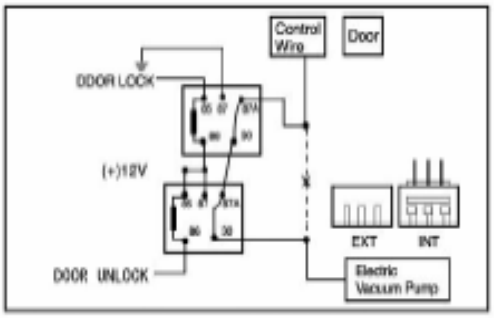

When work by vacuum pump, 2 additional relays are needed, and the output pulse time is 3.5 seconds (the time can be adjusted, refer to Optional Function Install)

When Locked, it is LOW, when unlocked, it is HIGH.

Connect DOOR UNLOCK, DOOR LOCK, and insert the control wires into INT socket in the main brain.

Installation for Anti-hijacker or being stolen

For Both Anti-hijacker and being stolen:

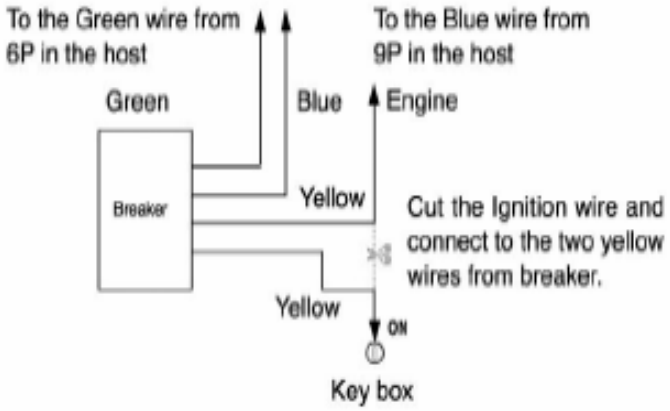

Only for being stolen:

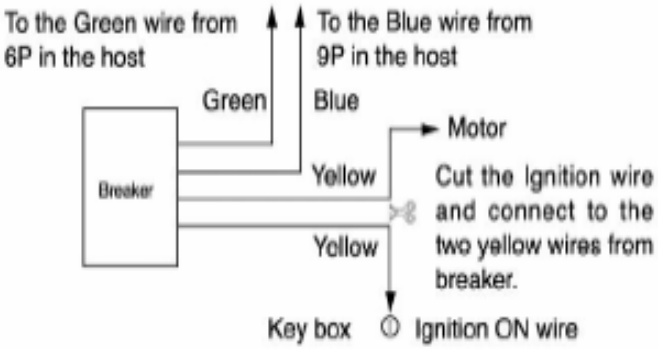

Pager Learn Routine

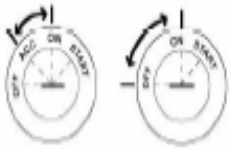

Lock box

1. Finish all installation
2. Prepare 3 sets pagers
3. Turn the key on ACC position
4. Turn the key 3 times between ON and ACC repeatly within 3 seconds. (car flashes 1 time)

■ **Start to register (each step only 5 seconds)**

5. Press I one time on the 1st pager (car flashes 1 time)
6. Press I one time on the 2nd pager (car flashes 1 time)
7. Press I one time on the 3rd pager (car flashes 1 time)

■ **Register is finished**

NOTICE FOR INSTALLER:

1. Be sure to wire the starter rightly, try to find the right wire to connect. Meanwhile, be sure to wire the start kill rightly.
2. Central Lock: (Yellow) To Unlock Signal wire and (Green) To Unlock Signal wire from 6P are to connect the central lock. When wiring, please refer to the instruction for Central Lock, see P 3-5.
3. To the Door Induction wire: only need to wire one of the two wires (+)/(-).
4. To the Warming-up light wire: it is optional install.
5. To the switch in the main brain:
   For switch 1, if ON, then no need to wire to engine induction wire; if OFF, then need to wire to engine induction wire.
   For switch 2, if switch 1 is ON, then switch this ON or OFF to try starting. (see 9P wiring)
6. To the socket in the main brain: According to the kind of the central door, to plug the corresponding socket.
7. To the jumper line in the main brain: For auto vehicle, cut the line, and no need reservation. For manual vehicle, do not cut the line, and reservation is needed, let user to know this when install, see P 7-9 in the user's manual.
8. If connect the trunk induction wire of the manual car, when remote control to release trunk, the reservation will be cancelled, let user to know this when install.

Adjustment

■ **Adjust the sensitivity of the shock sensor:**

Users should know the location of the shock sensor, and adjust the sensitivity depends on the circumstance.

High number, high sensitivity

■ **Adjust the siren volume:**

The default set is max, if want to lower it, just cut the jumper line in the siren.

■ **Use car key to cancel Alert ON:**

When do not have the pager, use car key to Alert OFF:

Key box

1. Turn the car key to ACC position.
2. Turn to ON and then back to ACC (repeat 3 times continuously within 3 seconds).
3. After finish this, the parking light will flash 1 time, and flash 2 times again after 3seconds, then all the alarm function will be stopped.

■ **On this occasion, use can use pager to reset all these functions:**

Press I+III 0.5 seconds, siren and parking light will work 2 times.

Trouble shooting

Questions	Reason	Settlements
Pager has no display or display dark	Battery is out; pager is moisture or shocked by force	Replace the battery, or contact your dealer
Pager can not remote control the car	Too long distance cause no communication; host or pager has problems	Operate following the manual or contact your dealer
Pager can not control the car, and light won't flash or alarm with car key to open the door	Fuse of power has problem or host has problem	Contact the dealer to test
Occasionally flash or siren when driving	Power of host or ground wire has problem, short circuit occasionally	Contact the dealer to test, if the door has problem, please check.
Siren no sound or low in Mute OFF	Wiring of siren or siren has problem	Check the wiring of siren is right or not
Easy to shock to alarm	Shock sensor is too sensitive	Adjust the sensitivity
Lock (Alert ON), Unlock (Alert OFF) is abnormal	Pager or central lock has problem	Query the status of the pager or use Emergent Switch to Alert OFF, then contact dealer to check.

Can not remote control to start the car	The original car key is microchip controlling alarm system, or not right reservation for manual car	For the car with microchip control, car key should be inserted into the car. Reservation before starter for manual car
Starter fail but pager shows success; or keep running ignition after remote start	Wiring for generator induction is not right connected	Contact the dealer to have a check
All the door is closed but pager shows no, meanwhile give out alarm	Door is not rightly closed, or wrong wiring to door switch, or original door has problem or wiring to time-lapse door lamp wire.	Contact the dealer to check wiring, if door switch has problem, please have a check.

- **Limited Lifetime Consumer Warranty**

  Wanhua Technology Co., Ltd warrants to the original purchaser that this product shall be free of defect in material and workmanship under normal use and circumstances for the period of time that the original owner of this product owns the vehicle in which it is installed, except that the remote controller unit for the period of one year from the date of installation to the original owner of this product.

- When the original purchaser returns the product to the retail store where it was purchased within the warranty period, and if the product is defective, Wanhua Technology Co., Ltd. will at its option repair or replace such.

- TO THE MAXIMUM EXTENT ALLOWED BY LAW, ANYAND ALL WARRANTIES ARE EXCLUDED BY THE MANUMFACTURER AND EACH ENTITY PARTICIPATING IN THE STREAM OF COMMERCE THEREWITH.

  THIS EXCLUSION INCLUDES BUT IS NOT LIMITED TO, THE EXCLUSION OF ANY AND ALL WARRANTY OF MERCHANTABILITY AND/OR ANDY AND ALL WARRANTY OF FITNESS FOR A PARTICULAR PURPOSE AND/OR ANY AND ALL WARRANTY OF NON-INFRINGEMENT OF PATENTS, IN THE WORLD.

- NEITHER THE MANUFACTURER OF ANY ENTITIES CONNECTED THEREWITH SHALL BE RESPONSIBLE OR

LIABLE FOR ANY DAMAGES WHATSOEVER, INCLUDING BUT NOT LIMITED TO, ANY CONSEQUENTIAL DAMAGES, INDIENTAL DAMAGES, DAMAGES FORLOSS OF TIME, LOSS OF EARNINGS, COMMERCIAL LOSS, LOSS OF ECONOMIC OPPORTUNITY AND THEL IKE. NOTWITHSTANDING THE ABOVE, MANUFACTURER DOES OFFER A LIMITED WARRANTY TO REPLACE OR REPAIR THE CONTROL MODULE AS DESCRIPTED ABOVE.

- SOME STATES DO NOT ALLOW LIMITATIONS ON HOW LONG AN IMPLIED WARRANTY WILL LAST OR THE EXCLUSION OR LIMITATION ON HOW LONG AND IMPLIED WARRANTY WILL LAST OR THE EXCLUSION OR LIMITATION OF INCIDENTAL OR CONSEQUENTIAL DAMAGES. THIS WARRANTY GIVES YOU SPECIFIC LEGAL RIGHTS, AND YOU MAY ALSO HAVE OTHER RIGHTS WICH VARY STATE TO STATE.

- WANHUA TECHNOLOGY CO., LTD. IS NOT RESPONSIBLE OR LIABLE FOR ANY DAMAGES WHATSOEVER, INCLUDING BUTNOT LIMITE TO, ANY CONSEQUENTIAL DAMAGES, INCIDENTAL DAMANGES, DAMAGES FORLOSS OF TIME, LOSS OF EARNINGS, COMMERCIAL LOSS, LOSS OF ECONOMIC OPPORTUNITY AND THE LIKE THAT MAY OR MAY NOT RESULTED FROM THE OPERATION.
  NOTWITHSANDING THE ABOVE, MANUFACTURER DOES OFFER A LIMITED WARRANTYTO REPLACE OR REPAIR THE CONTROL MODULE AS DESCRIBED ABOVE.

Options Programming

After finish wiring,some options may be changed to suit your car,steps are following: Put car key in ON position,press two buttons of remote(see below tables,for those options from Option 1,press I+II for 2 seconds,for those options from Option 2, press I+IV for 2 seconds),then:

Car horn will sound one time;

press IV for times according to the item needed(see below table,left);

4-5seconds later,car horn and turning light will work corresponding times,this means the item is selected;

Then press I or III according to the option needed(see below table,right).

To program other options,please resume the above steps.

Mote:if car horn sounds continuously,it means fail operation,please resume.

Option 1/Item	Options Descripton	I button	II button
Press IV 1 time	Engine Warm up time when remote start	4seconds	10seconds
Press IV 2 times	Turning light when open door	Not flash	flash
Press IV 3 times	Door Lock signal time	0.8 seconds	4seconds
Press IV 4 times	Car key start after Remote start(aften remote start the car,car key works or not)	Active	Inactive
Press IV 5 times	Auto unlock when stop car	Active	Inactive

Option 2/Item	Options Description	I button	II button	III button
Press IV1 time	Turbo function (for cool engine)	Active	Incative	N/A
Press IV 2 times	24-hour reservation function for remote start	Active	Incative	N/A
Press IV 3 times	Reservation way	Automatically reservation	No reservation when opev door	Manual Reservation
Press IV 4 times	Start Wire output time	Default	Plus 0.2 seconds	Plus 0.5 seconds

For example,user needs to set the central door lock output timeto be 4 ceconds,steps are follows:Press I+II for 2 seconds,car horn should sound one time;press IV 3 times, 4-5 secnds later, carhorn and turning light will work 3 times;press II button.Then the option is set.

Guarantee

This product is strictly tested before out from factory	
Model:	
Where Buy	
Installer/Dealer	
Host Number	
Vehicle Type	
Purchase Date	
User and the Tel number	

When buying this product user should record the above items. We are responsible to repair/replace within one year after sell for the malfunction caused from normal use. Your local dealer is responsible for all the after-sell service.

Warning:

Changes or modifications to this unit not expressly approved by the party responsible for compliance will void the user's authority to operate the equipment. Any change to the equipment will void FCC grant.

This equipment has been tested and found to comply with the limits for a Class B digital device, pursuant to part 15 of the FCC Rules. These limits are designed to provide reasonable protection against harmful interference in a residential installation. This equipment generates, uses and can radiate radio frequency energy and, if not installed and used in accordance with the instructions, may cause harmful interference to radio communications. However, there is no guarantee that interference will not occur in a particular installation. If this equipment does cause harmful interference to radio or television reception, which can be determined by turning the equipment off and on, the user is encouraged to try to correct the interference by one or more of the following measures:

--Reorient or relocate the receiving antenna.

--Increase the separation between the equipment and receiver.

--Connect the equipment into an outlet on a circuit different from that to which the receiver is connected.

--Consult the dealer or an experienced radio/TV technician for help.