Product : Communicator

Model No. : XC-7107

Brand Name: Honeywld

User Manual

User Manual

System Model No. : XC-8000

XC-209 SmartTag

XC-7107 Communicator

HONEYWLD TECHNOLOGY CORPORATION

XC-8000

MyGuardian Home User Guide

Rev. 1.0

PACKAGE CONTENTS

XC-209H Smart Tag

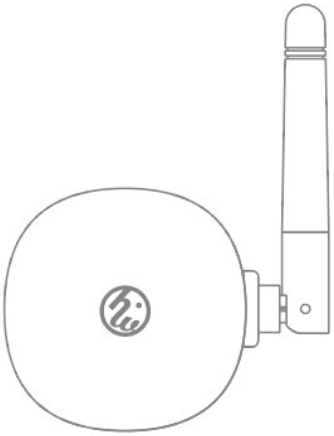

XC-7107 Communicator

USB Power Adapter

SMART PHONE SETUP

Step1: Install MyGuardian Home APP

Scan the QR Code on Giftbox to install MyGuardian Home APP

Step2: Add your Communicator into MyGuardian Home App

1. Scan QR Code on the back of XC-7107 Communicator.

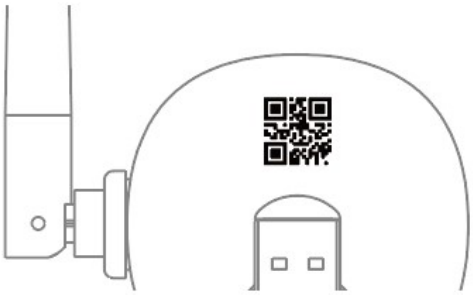

2. Plug the Communicator (XC-7107) into USB power adapter and plug it into an electrical outlet. Waiting Red LED light on, then tap Next

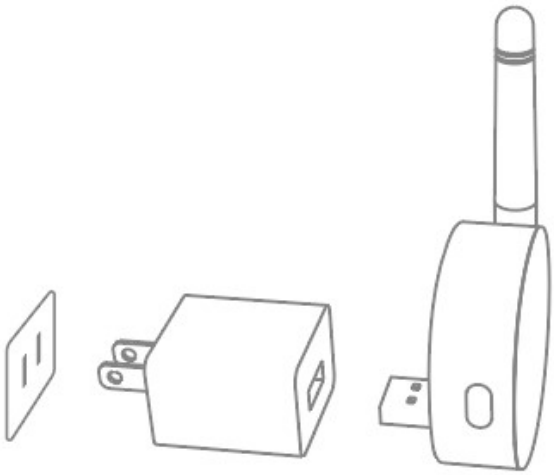

3. Enter the password to connect your Wi-Fi. Waiting Blue LED light on, You have successfully set up Wi-Fi connection.

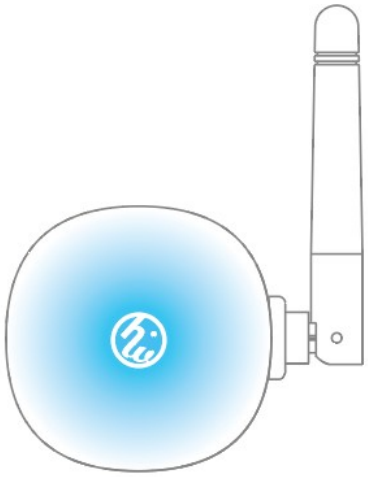

Step3: Activate Your Smart Tag

Hold down **SOS Button** on Smart Tag for 3 seconds till the Blue **LED** light indicates Smart Tag is being activated.

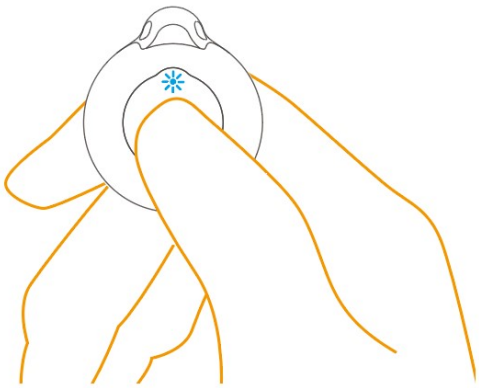

Step4: Add More Caregivers

Send invitation SMS message for more caregivers through your phone book.

GUARD BY MYGUARDIAN HOME

Wear Smart Tag as a pendant and keep it on your chest. Make sure your Smart Tag is always connected with your Communicator. When Smart Tag detects a fall, the Communicator will send out fall alert automatically. When you need help, hold down the SOS button for 2 seconds till the Red LED light flash, SOS alert will be sent out automatically.

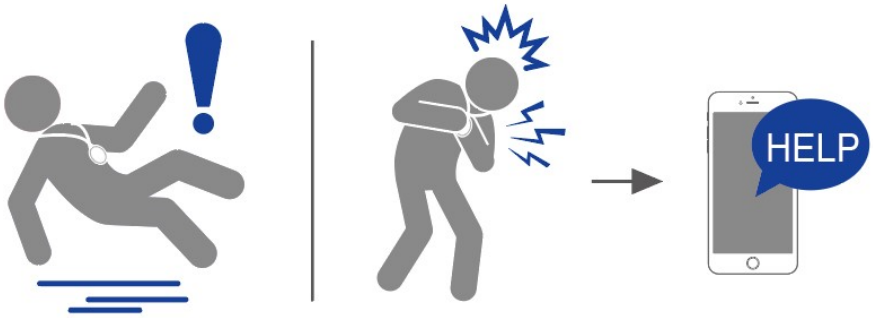

SAFETY INSTRUCTIONS

- Wear Smart Tag as a pendant and keep it onto your chest to ensure accurate motion sensor detection.
- Please wear Smart Tag at all time, even in the shower or bath. The bathroom is often a place where people fall and get injured.
- Do not place Smart Tag below 1 meter deep water or more than 30 minutes.
- The Bluetooth transmission range is up to 150 meters. The signal range may be affected by environment, You are advised to test the range of Smart Tag in all possible areas of your daily living environment.

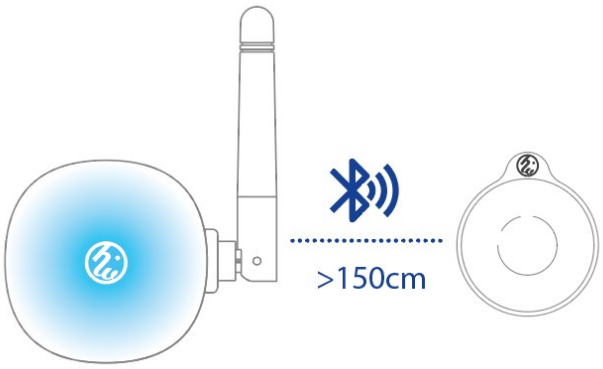

- Beware of low battery warning for your Smart Tag as it may cause transmission problem. Replace battery for your Smart Tag immediately when battery is low.
- No fall detection technology is 100% accurate; If you fall and need, don't wait for the device to activate, press the SOS button immediately.
- Any necklace worn around the neck may pose a strangulation risk, including the possibility of injuries and death, especially when the necklace is tangled with other objects. Please use Smart Tag with extreme caution.
- Internet connection are affected by many factors, and none of which are within the control of Honeywld Technology Corp. The alert notification delivery time cannot be guaranteed.

REGULATORY & NOTICES

FCC statement

Model: XC-7107 Communicator 通信主機
FCC ID : UNG-XC7107

FCC Radiation Exposure Statement
This equipment complies with FCC RF radiation exposure limits set forth for an uncontrolled environment. This equipment should be installed and operated with a minimum distance of 20 centimeters between the radiator and your body.
This transmitter must not be co-located or operating in conjunction with any other antenna or transmitter.
The antennas used for this transmitter must be installed to provide a separation distance of at least 20 cm from all persons and must not be co-located or operating in conjunction with any other antenna or transmitter. (*for XC-7107)*

This device complies with part 15 of the FCC Rules. Operation is subject to the following two conditions:(1) this device may not cause harmful interference, and (2) this device must accept any interference received, including interference that may cause undesired operation.

Honeywld Technology Corp. **Made in Taiwan**

NCC 低功率警語

第十二條：
經型式認證合格之低功率射頻電機，非經許可，公司、商號或使用者均不得擅自變更頻率，加大功率或變更原設計之特性及功能。
第十四條：
低功率射頻電機之使用不得影響飛航安全及干擾合法通信;經發現有干擾現象時，應立即停用，並改善至無干擾時方得繼續使用。前項合法通信，指依電信法規定作業之無線電通信。低功率射頻電機須忍受合法通信或工業，科學及醫療用
電波輻射性電機設備之干擾。

Honeywld Technology Corp.
瀚誼世界科技股份有限公司
www.honeywld.com
Tel : +886-3-5770725

4F, No.5, Hsin-Ann Rd., Hsinchu Science Park, Hsinchu 30076, Taiwan, R.O.C.