RP-M2470BWR
Datasheet

OEM/Integrators Installation guide

Confidential

REVISION HISTORY

Version	Date	Description
VER.1.0	2014.04.21.	▪ First Version Release

Confidential

CONTENTS

1. SPECIFICATIONS 4

1.1. DESCRIPTION 4
1.2. DRAWING 6
1.2.1. Design Dimension 6
1.2.2. Outline 6
1.2.3. PCB drawing 1 (top view) 7
1.2.4. PCB drawing 2 (top view) 7
1.2.5. Soldermask opening guide 8
1.2.6. Copper pour rules of Ground for antenna matching 8

2. PIN DESCRIPTION 9

2.1. ABSOLUTE MAXIMUM RATINGS 9
2.2. DC CHARACTERISTICS 9
2.3. ELECTRICAL SPECIFICATIONS 10
2.4. RF CHARACTERISTICS 11
2.5. ANALOG TEMPERATURE 13
2.6. SPECIFICATION ON CHIP ANTENNA 14
2.6.1. Electrical Specifications 14
2.6.2. Mechanical Specifications 14
2.6.3. Appearance & Material 14
2.6.4. Evaluation Board Dimension 15
2.6.5. PCB Design Guide 15
2.6.6. Typical Measurement result(Gain, Radiation, Pattern) 15
2.7. ELECTRICAL INTERFACE 17

3. SCHEMATIC FOR APPLICATION 19

4. RELIABILITY 20

5. REFLOW PROFILE 21

6. RF TEST 22

6.1. RF TEST BLOCK DIAGRAM 22
6.2. TEST METHOD 22
6.3. RF TEST REPORT 23

7. QC PROCESS 24

8. PACKAGE 26

8.1. DIMENSIONS OF TAPE 26
8.2. DIMENSIONS OF REEL 26

Supplement **28**

FCC Warning Information 28

Confidential

1. SPECIFICATIONS

This specification is applied to IEEE802.15.4 & RF4CE Transceiver Module. This module is embedded with Chip Antenna, 32MHz X-TAL and Single chip(MG2470).

1.1. Description

RF Transceiver

- Single-chip 2.4 ~ 2.4835GHz RF Transceiver
- Low Power Consumption
- High Sensitivity of -94dBm at 250Kbps
- No External T/R Switch or Filter Needed
- On-chip VCO, LNA, and PA
- Programmable Output Power up to +9.6dBm
- Direct Sequence Spread Spectrum
- O-QPSK Modulation
- Scalable Data Rate Including 250Kbps Specified in IEEE802.15.4: 31.25Kbps ~ 1Mbps
- RSSI Measurement
- Compliant to IEEE 802.15.4

Hardwired MAC

- Two 256-byte Circular FIFOs
- FIFO Management
- AES Encryption/Decryption engine(128bit)
- CRC-16 computation and check

8051-Compatible MCU

- 8051 compatible(Single Cycle Execution)
- 64KB embedded flash memory
- 6KB data memory
- 128-byte CPU Dedicated memory
- 1KB Boot ROM
- Dual DPTR support
- I2S/PCM interface with two 256-byte FIFOs
- µ-law/a-law/ADPCM voice Encoder/ Decoder
- Two high-speed UARTs with two 16-byte FIFOs(up to 1Mbps)
- Four timer/counters
- 5 PWM Channels
- Watchdog timer

Confidential

- Sleep timer using the 32KHz RC-OSC clock
- Quadrature Signal Decoder
- 22 General Purpose I/Os
- Internal 32KHz RC Oscillator for sleep timer
- 16MHz RC Oscillator for the fast start-up from reset & power-down mode
- On-chip Power-on-Reset and Brown-out detector
- 4-Channel 12-bit ADC(ENOB > 10-bit)
- SPI Master/Slave Interface with two 16-byte FIFO
- I2C Master/Slave with 16-byte FIFO
- Programmable IR(Infra-Red) modulator
- ISP(In System Programming)
- External clock output function(500KHz, 1/2/4/8/16/32MHz Selectable)

Clock Inputs

- 32MHz crystal for system clock

Power

- 1.8V(Core)/2.0~3.6V(I/O) operation
- Power management scheme with deep sleep mode
- Separate on-chip regulators for analog and digital circuitry
- Power supply range for internal regulator(2.0V(Min) ~ 3.6V(Max))

Package

- SMD Type-48Pin(15.0x18.0x2.0(mm))

Confidential

1.2. Drawing

1.2.1. Design Dimension

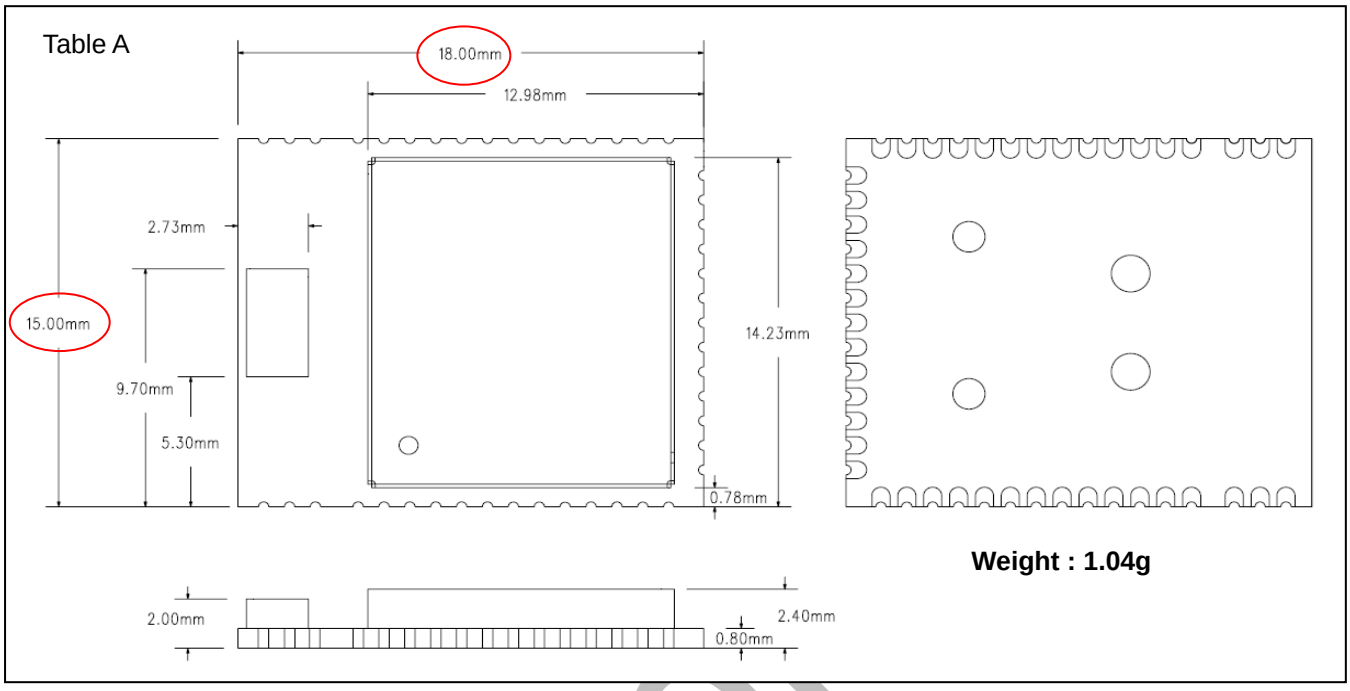

※ Table A: Real dimension specification

ITEM	Width	Length
Design	15 mm	18 mm
Real dimension value	14.90mm(*)	17.90mm(*)

(*) : 0.1mm is cut by Dicing blade

1.2.2. Outline

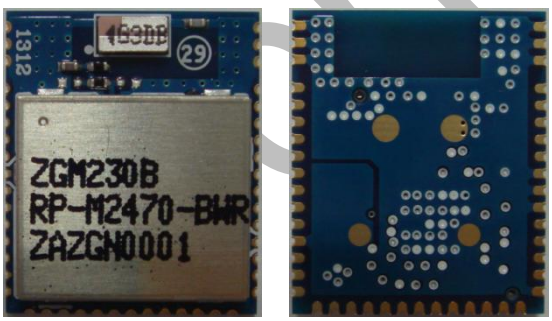

1.2.3. PCB drawing 1 (top view)

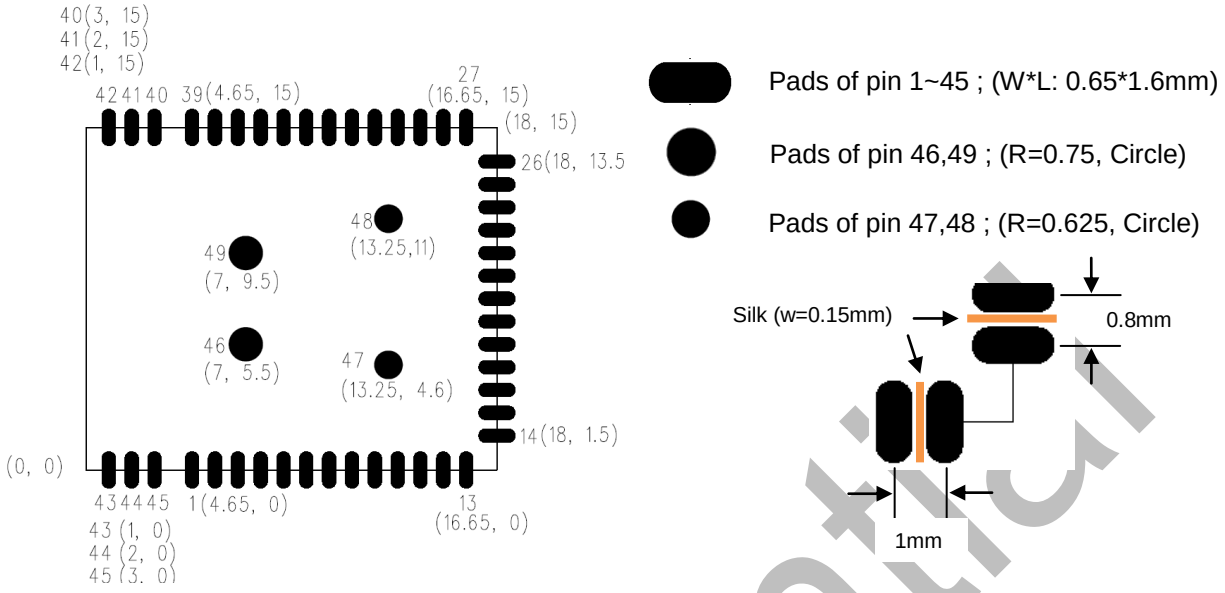

1.2.4. PCB drawing 2 (top view)

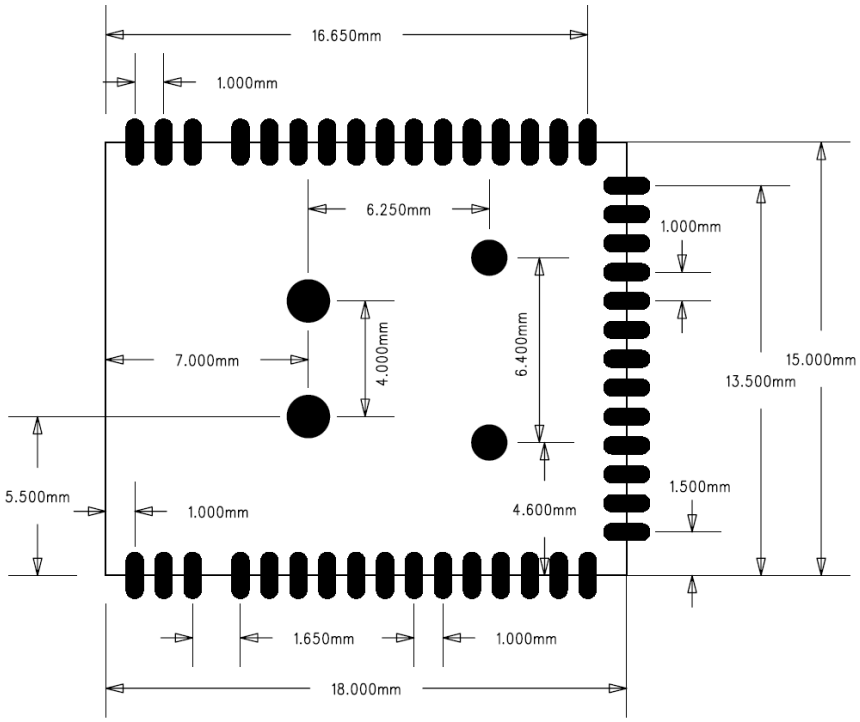

1.2.5. Soldermask opening guide

PAD TYPE	PAD SIZE	MASK open	RESULT
	W: 0.65mm L: 1.60mm	W:0.615mm L:1.76~1.8mm	W: About 95% L: About 110~115%
	R=0.75mm	R=0.35mm	46.7%
	R=0.625mm	R=0.25mm	40%

1.2.6. Copper pour rules of Ground for antenna matching

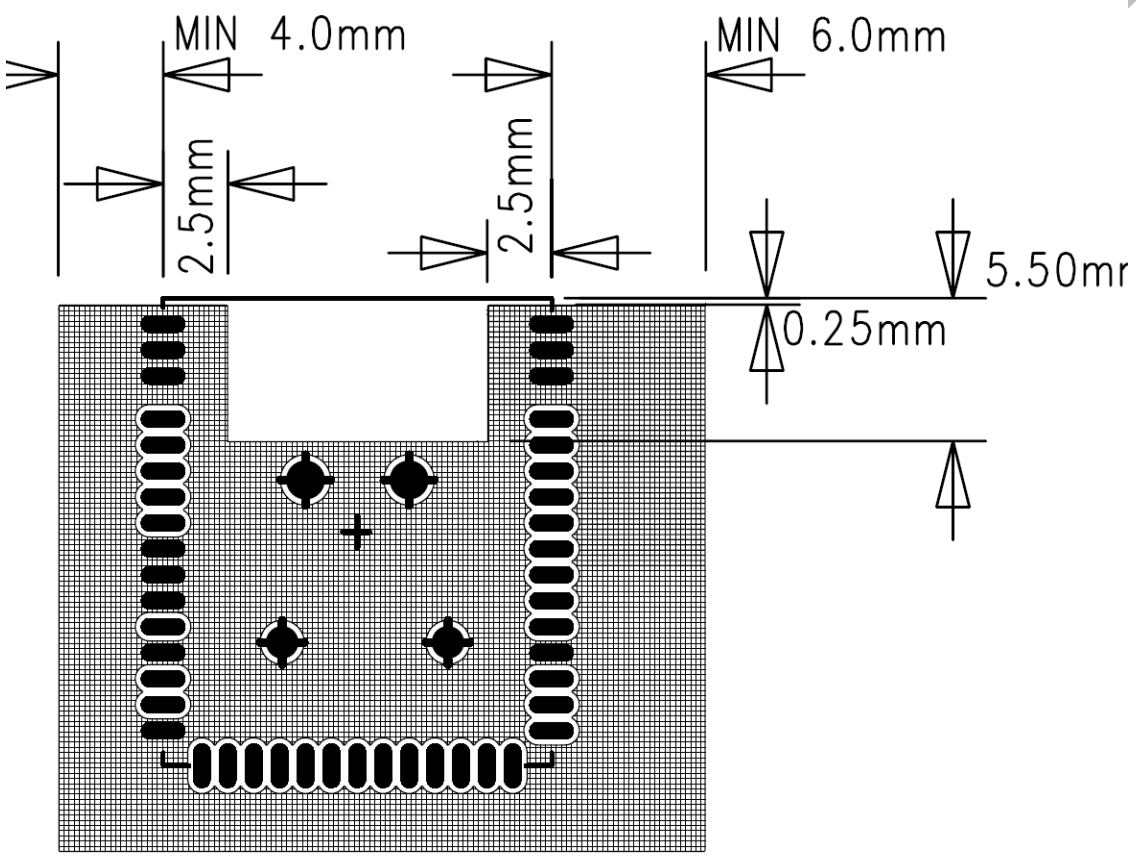

2. PIN DESCRIPTION

2.1. Absolute Maximum Ratings

Symbol	Parameter	Rating	Unit
VDD	Chip core supply voltage	-0.3 to 2.0	V
3V_IN	I/O supply voltage	-0.3 to 3.6	V
ST	Storage Temperature	-40 to 85	℃

2.2. DC Characteristics

Parameter	Name	MIN	TYP	MAX	Unit
3V_IN	I/O supply voltage(VDDIO)	2.0	3.0	3.6	V
VIH	High level input voltage	2.5	-	3.6	V
VIL	Low level input voltage	0	-	0.4	V
VOH	High level output voltage	2.5	-	3.6	V
VOL	Low level output voltage	-	-	0.4	V
TA	Air temperature	-40	-	85	℃

Confidential

2.3. Electrical Specifications

(Condition: EVM Board, at 25℃, 3V_IN=3.0V)

Parameter	Min	Typ.	Max	Unit
Current consumption				
MCU active without RX/TX operation, Peripherals [UART1 & RNG] active @ MCU clock = 8MHz @ MCU clock = 16MHz	-	4.2 5.3	-	mA
TX mode. MCU active @ MCU clock = 8MHz @ maximum transmit output power @ 0dBm	-	34.6 22.1	-	mA
RX Mode (MCU active and peripherals[UART1 & RNG] active) @ MCU clock = 8MHz	-	22	-	mA
Power mode1. Digital regulator on, 16MHz RCOSC and 32MHz crystal oscillator off, 32kHz RCOSC, POR, BOD, and sleep timer active.	-	-	40	uA
Power mode1. Digital regulator on, 16MHz RCOSC, 32MHz crystal oscillator off, 32.768kHz crystal oscillator, POR, BOD, and sleep timer active.	-	-	50	uA
Power mode2. Digital regulator off, 16MHz RCOSC, 32MHz crystal oscillator off, 32kHz RCOSC and sleep timer active.	-	-	2	uA
Power mode2. Digital regulator off, 16MHz RCOSC, 32MHz crystal oscillator off, 32.768kHz crystal oscillator and sleep timer active.	-	-	12	uA
Power mode3. Digital regulator off, 16MHz RCOSC, 32MHz crystal oscillator off, 32kHz RCOSC(32.768kHz crystal oscillator) and sleep timer off.	-	-	1	uA
Wake-up and timing				
Power mode1 → Active Digital regulator on, 16MHz RCOSC and 32MHz crystal oscillator off. Start-up of 16MHz RCOSC		5		us
Power mode2 → Active Digital regulator off, 16MHz RCOSC and 32MHz crystal oscillator off. Start-up of regulator and 16MHz RCOSC		100		us
MCU Active → TX or RX Initially running on 16MHz RCOSC, Added start-up time of 32MHz crystal oscillator.		992		us
TX / RX and RX / TX turnaround	-	-	192	us

Confidential

2.4. RF Characteristics

Parameter	Min	Typ.	Max	Unit
RF Characteristics				
RF Frequency Range	2394	-	2507	MHz
Maximum Input Level (PER=1%) @250kbps	-	-2	-	dBm
Received RF Bandwidth	-	2	-	MHz
Channel Bandwidth	-	5	-	MHz
Receiver Sensitivity (PER≤1%, Packet length of 22-byte) @1000kbps @500kbps @250kbps @125kbps @62.5kbps @31.25kbps	-	 -88 -89 -94 -95 -98 -100	-	dBm
Adjacent Channel Rejection +5MHz -5MHz	-	 27 27	-	dB
Alternate Channel Rejection +10MHz -10MHz	-	 48 47	-	dB
Co-Channel Rejection	-	-8.9	-	dB
Blocking / Desensitization -250MHz -100MHz -50MHz +50MHz +100MHz +250MHz	-	 -25 -35 -38 -37 -35 -31	-	dBm
TX output power	-	-	9.6	dBm
Transmit chip rate	-	2	-	Mcps
Spurious Emission(30Hz~1GHz)	-	-60	-	dBm
Spurious Emission(1GHz~12.75GHz)	-	-45	-	dBm
Spurious Emission(5.15GHz~5.3GHz)	-	-70	-	dBm
2nd Harmonics	-	-45	-	dBm
3nd Harmonics	-	-55	-	dBm
Frequency Error Tolerance	-96	-	+96	KHz

Confidential

Error Vector Magnitude(EVM)	-	7	-	%
Frequency Synthesizer				
Phase Noise (Unmodulated carrier) @±100KHz offset @±1MHz offset @±2MHz offset @±3MHz offset @±5MHz offset	-	 -78.5 -102.1 -112.7 -118.9 -123.2	-	dBc/Hz
PLL Lock Time	-	-	192	usec
32MHz Crystal Oscillator				
Crystal Frequency	-	32	-	MHz
Crystal Frequency Accuracy Requirement	-40	-	+40	ppm

Confidential

2.5. Analog Temperature

Parameter	Min	Typ	Max	Unit
Analog Temperature				
Output Voltage at -40℃	-	716	-	mV
Output Voltage at 0℃	-	847	-	mV
Output Voltage at 40℃	-	978	-	mV
Output Voltage at 80℃	-	1109	-	mV
Temperature Coefficient	-	3.275	-	mV/℃
※ All measurement results are obtained using the 12 bit ADC				
Analog Temperature				
Input Voltage	0	-	VDD	V
Input Resistance	-	150	-	kΩ
Full-scale signal	-	-	3	V
Effective number of bits(ENOB) Single-ended input, 12bit setting	-	10.8	-	bits
Effective noise and distortion(SINAD) Single-ended input, 12bit setting	-	66.78	-	dB
Current Consumption	-	0.46	-	mA
Internal Reference Voltage	-	1.25	-	V

Confidential

2.6. Specification on Chip Antenna

2.6.1. Electrical Specifications

No	Item	Spec.	Remark
1	Frequency Range [GHz]	2.4 ~2.485	
2	VSWR	Max 3.0:1	
3	Peak Gain [dBi]	typ. 2.9	
4	Total Avg. Gain [dBi]	typ. -0.5	
5	Efficiency [%]	typ. 90	
6	Polarization	Linear	
7	Impedance [Ω]	Nominal 50	

※ The results are measured on the 50x50mm^2 evaluation board(EVB).
※ See to Sec 2.3 for more detailed gain parameter.

2.6.2. Mechanical Specifications

No	Item	Spec.	Remark
1	Dimensions (LxWxH)	4.0x2.0x1.2 mm^3	
2	Unit Weight	typ. 35 mg	
3	Operating Temperature	-35 ~ +85 ℃	

2.6.3. Appearance & Material

No	Item	Function	Material
①	Marking	Feeding Index	Ink
②	Electrode	Radiation Element	Ag
③	Ceramic Body	-	Ceramic

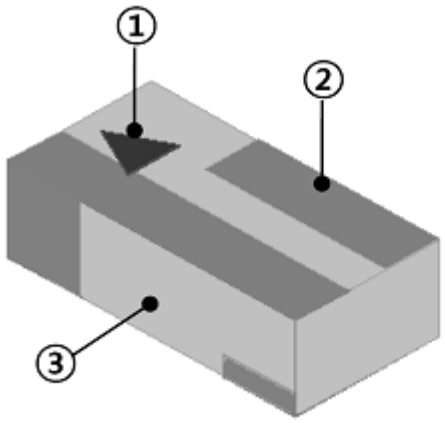

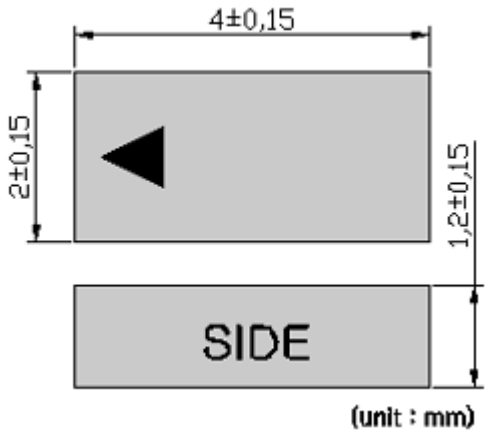

2.6.4. Evaluation Board Dimension

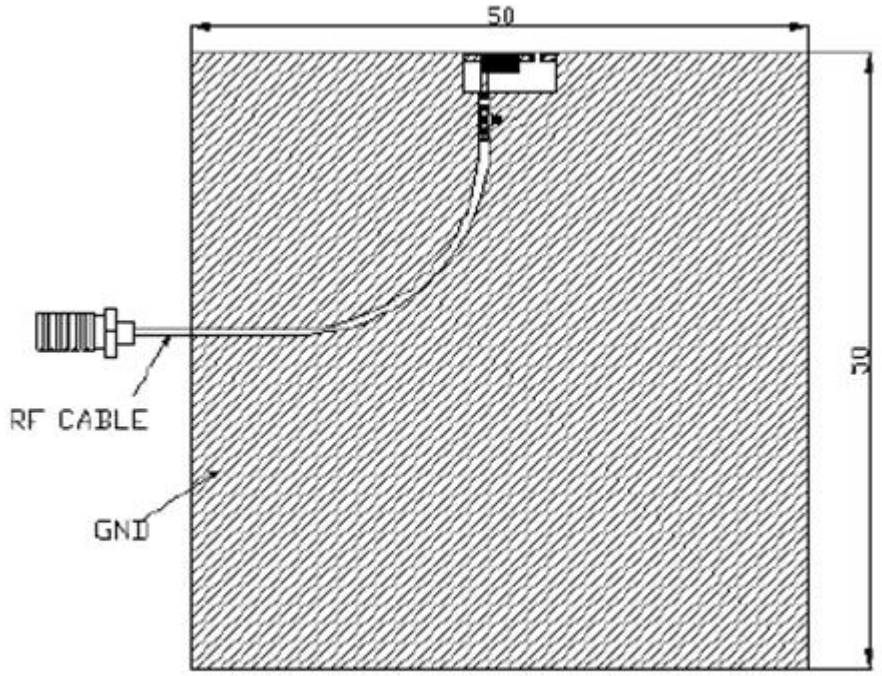

✓ Evaluation board size ~ 50x50
✓ Fill Cut Area (GND Clearance) ~ 8.5x3.8

2.6.5. PCB Design Guide

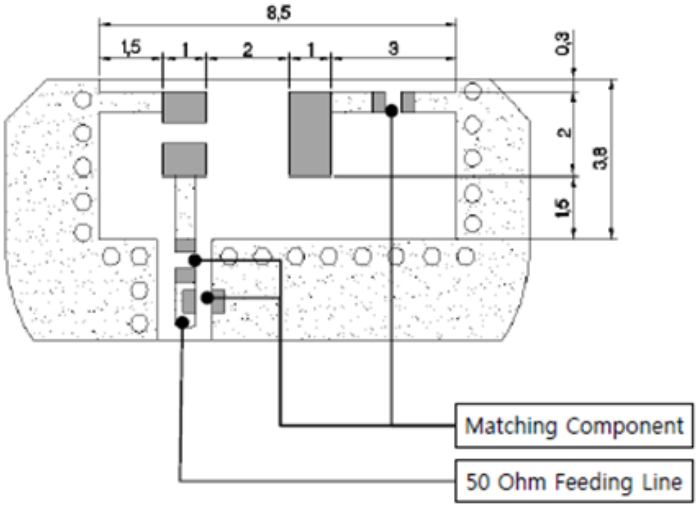

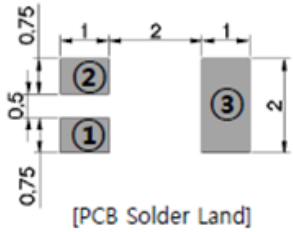

No	Pin Assignment
①	Feeding
②	GND
③	GND

[unit : mm]

2.6.6. Typical Measurement result(Gain, Radiation, Pattern)

	Peak Gain (dBi)	Avg. Gain (dBi)	Total Avg. Gain (dBi)	Efficiency (%)
Azimuth	2.2	0.2	-0.45	90
Elevation 1	2.2	-0.8		
Elevation 2	2.7	-1.9		

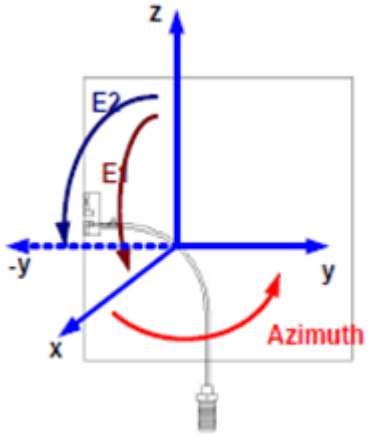

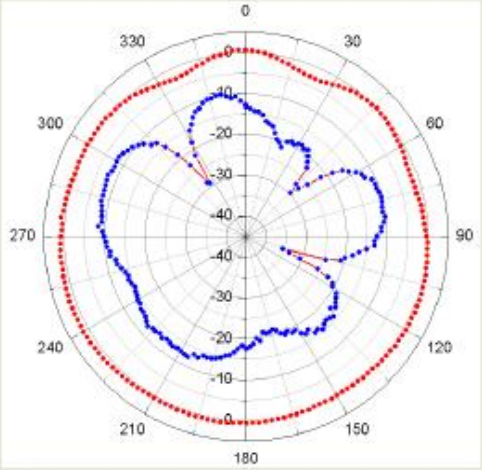

[Azimuth plane @2.45GHz]

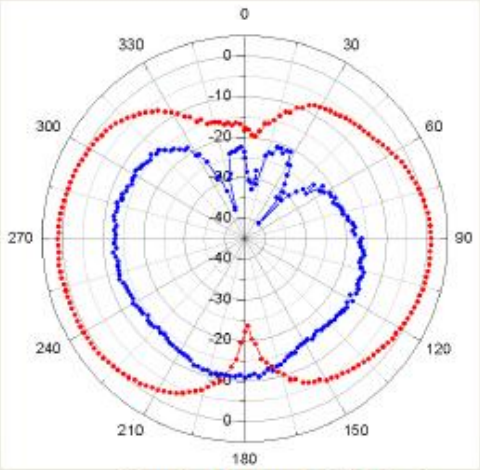

[Elevation1 plane @2.45GHz]

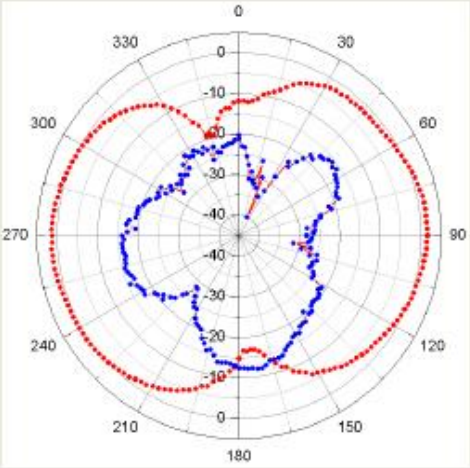

[Elevation2 plane @2.45GHz]

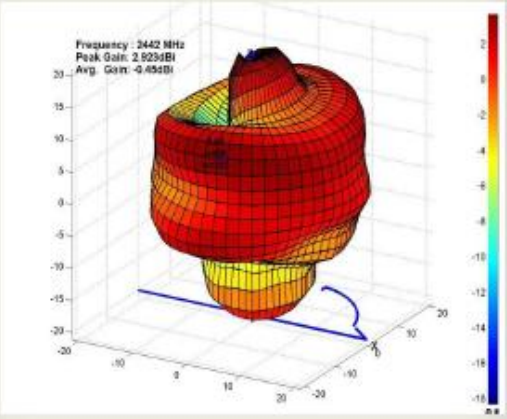

[3D Radiation Pattern]

2.7. Electrical Interface

Terminal	NAME	Interface	I/O	Description
1	ACH0	Analog	I/O	Sensor ADC input
2	ACH1	Analog	I/O	Sensor ADC input
3	ACH2	Analog	I/O	Sensor ADC input
4	ACH3	Analog	I/O	Sensor ADC input
5	NC	-	-	-
6	AGND	Ground	-	RF Ground
7	AGND	Ground	-	RF Ground
8	AGND	Ground	-	RF Ground
9	MS[2]	Digital	I	ISP
10	NC	-	-	-
11	RESETB	Digital	I	Reset (Active Low)
12	3V_IN	Power	I	3V Power supply
13	DGND	Ground	-	Ground for digital core and I/O
14	P1[7]	Digital	B	Port P1.7/I2C_SDA/TRSW
15	P1[6]	Digital	B	Port P1.6/I2C_SCL/TRSWB
16	NC	-	-	-
17	P1[4]	Digital	B	Port P1.4/QUADZB/EXT_RTC_CLK/PTC_GATE4/XOSC32K_IN
18	P1[3]	Digital	B	Port P1.3/QUADZA/PTC_GATE3/IR_TX/CLK_OUT/XOSC32K_OUT
19	NC	-	-	-
20	P1[1]	Digital	B	Port P1.1/TXD1
21	P1[0]	Digital	B	Port P1.0/RXD1
22	P3[7]	Digital	B	Port P3.7/CTS1/SPICSN
23	P3[6]	Digital	B	Port P3.6/RTS1/SPICLK
24	P3[5]	Digital	B	Port P3.5/CTS0/QUADYB/SPIDO/T1
25	P3[4]	Digital	B	Port P3.4/RTS0/QUADYA/SPIDI/T0

Confidential

26	P3[3]	Digital	B	Port P3.3/nINT1(active low)
27	P3[2]	Digital	B	Port P3.2/nINT0(active low)
28	P3[1]	Digital	B	Port P3.1/TXD0/QUADXB
29	P3[0]	Digital	B	Port P3.0/RXD0/QUADXA
30	DGND	Ground	-	Ground for digital core and I/O
31	NC	-	-	-
32	P0[7]	Digital	B	Port P0.7/I2STX_MCLK/PTC_GATE2
33	P0[6]	Digital	B	Port P0.6/I2STX_BCLK/PTC_GATE1
34	P0[5]	Digital	B	Port P0.5/I2STX_LRCLK/PTC_GATE0
35	P0[4]	Digital	B	Port P0.4/I2STX_DO/PWM4, 16mA drive capability
36	P0[3]	Digital	B	Port P0.3/I2SRX_MCLK/PWM3, 16mA drive capability
37	P0[2]	Digital	B	Port P0.2/I2SRX_BCLK/PWM2, 16mA drive capability
38	P0[1]	Digital	B	Port P0.1/I2SRX_LRCLK/PWM1, 16mA drive capability
39	P0[0]	Digital	B	Port P0.0/I2SRX_DI/PWM0, 16mA drive capability
40,41,42	AGND	Ground	-	RF Ground
43,44,45	AGND	Ground	-	RF Ground
46,49	AGND	Ground	-	RF Ground
47,48	DGND	Ground	-	Ground for digital core and I/O

Confidential

3. SCHEMATIC for APPLICATION

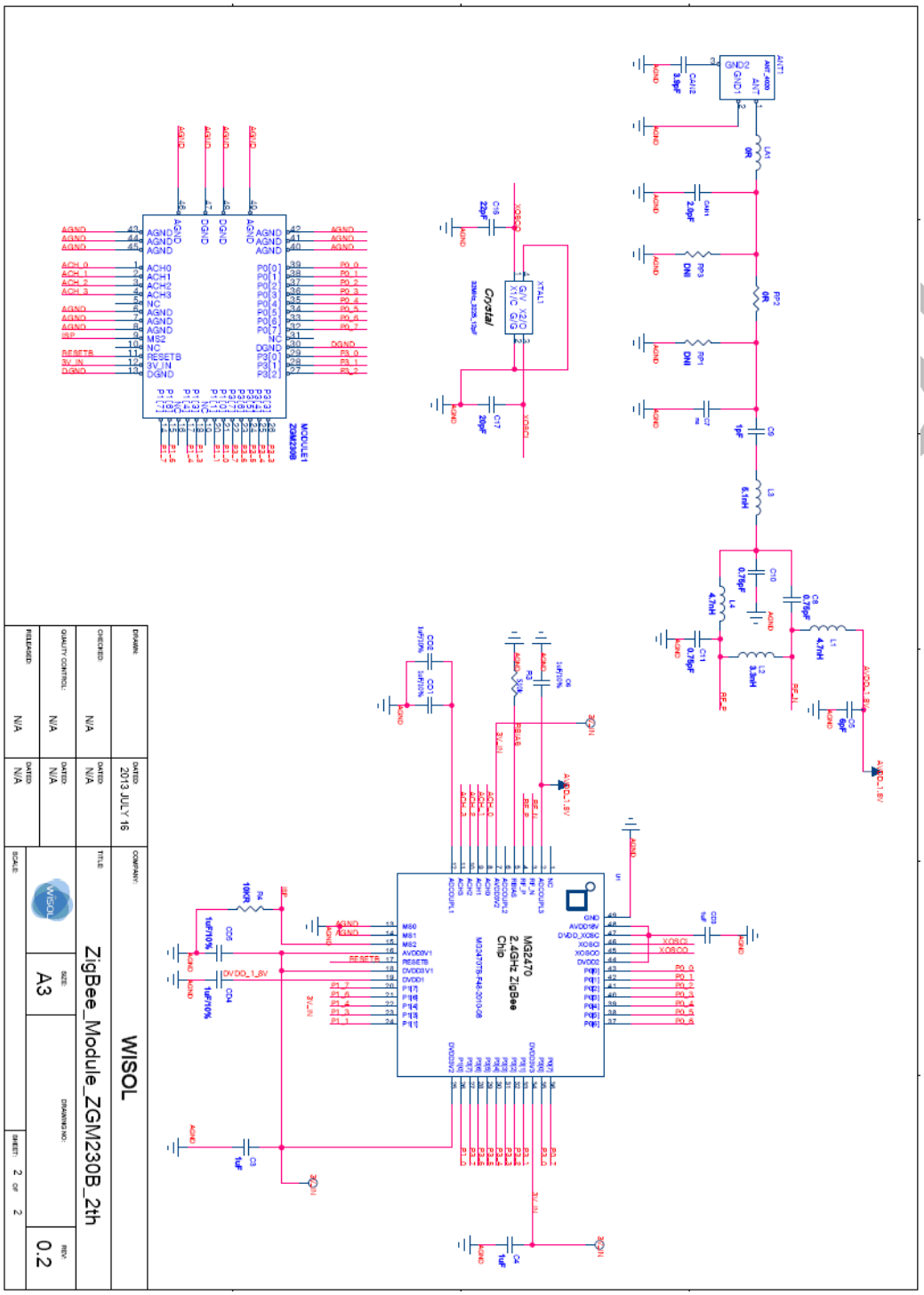

4. RELIABILITY

No	Test item	Test condition
1	Thermal Shock Cycle	30min. at -40℃, 30min. at 85℃, 100Cycles Recovery Time 2hours
2	Vibration Test	50Hz -> 500Hz -> 50Hz , 15min/Cycle X,Y,Z : Each 12 times (Total : 9hours)
3	High Temperature Storage Test	96 hours at 85℃±2℃, Recovery Time 2hours
4	Low Temperature Storage Test	96 hours at -40℃±2℃, Recovery Time 2hours
5	High Temperature & Humidity Storage Test	96 hours at 60℃±2℃ & 95%RH±2%RH. Recovery Time 2hours
6	Operating Temperature TEST	25℃ → -20℃ to 70℃ → 25℃ (default step degree 10℃, step hour 0.5hr)
7	High Temperature & Humidity Operating Test	24hours at 60℃ & 85%±2%RH.
8	Drop Test	Height min 76cm, All sides onto Iron plate (T=min. 2mm).

Confidential

5. REFLOW PROFILE

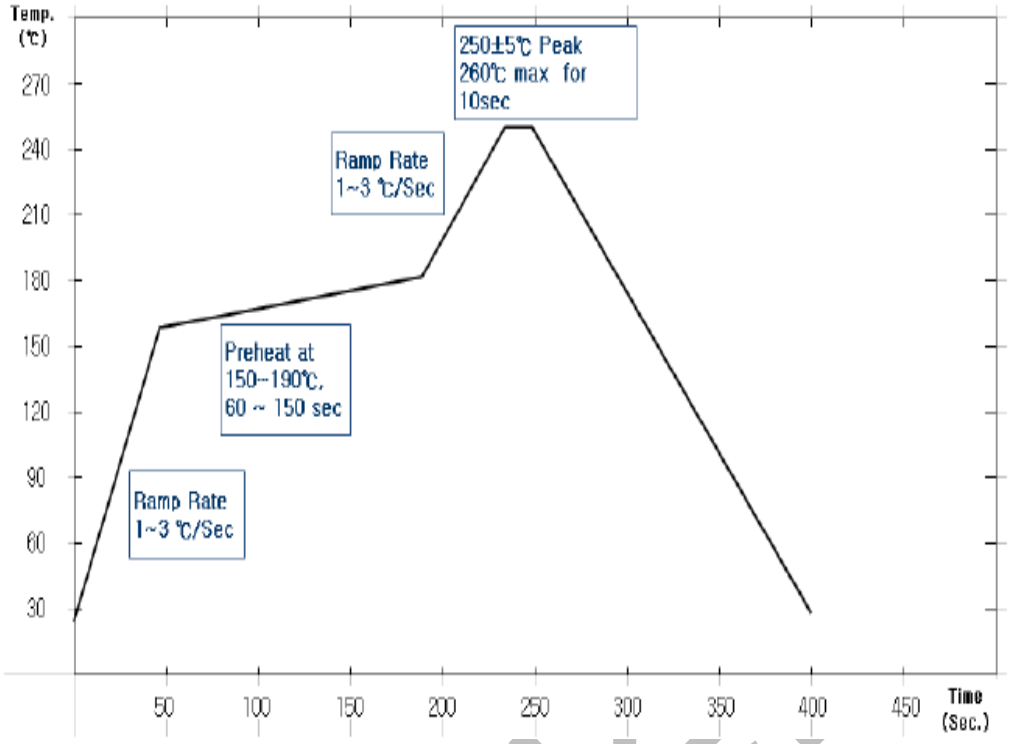

Confidential

6. RF TEST

6.1. RF Test Block Diagram

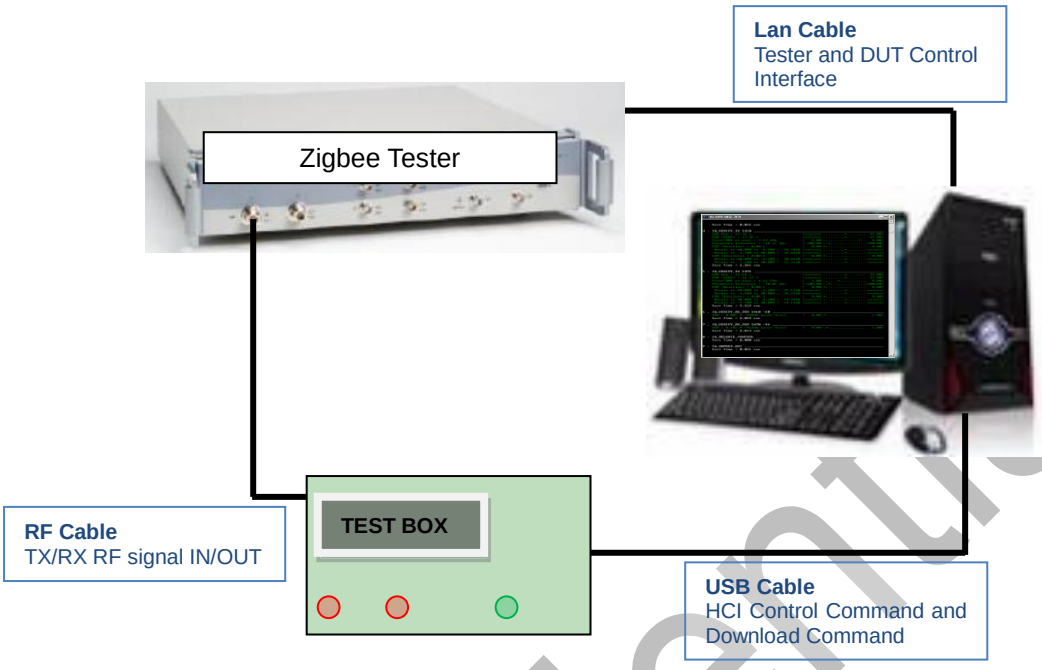

6.2. Test Method

1) Testing instrument
a. IQFLEX-802.11A/B/G Test instrument (LITEPOINT 's)
b. PC : Test Program and Software
c. Test JIG

2) Testing method
a. Insert RF Module.
b. Push <POWER >button on JIG
=> First, connected with module
c. Enter a <START>key, start RF testing.
=> PC TOOL "PASS" "NG" displayed
d. Push <POWER>button on JIG
=> Remove Product

Confidential

6.3. RF Test Report

Specification	2405MHz TX BLOCK						2480MHz TX BLOCK						RX PER		Overall Pass
	EVM ALL	EVM (PSDU)	POWER (RMS no Gap)	Frequency Tolerance	SEM (Relative)	SEM (Absolute)	EVM ALL	EVM (PSDU)	POWER (RMS no Gap)	Frequency Tolerance	SEM (Relative)	SEM (Absolute)	2405_RX Sensivity	2480_RX Sensivity	
	≤ 35%	≤ 35%	1 ~ 9 dBm	-96 ~ 96 Khz	0.000	0.000	≤ 35%	≤ 35%	1 ~ 9 dBm	-96 ~ 96 Khz	0	0	≤1%(@-96dBm)	≤1%(at-96dBm)	
Sample #1	15.95	15.88	7.03	0.86	0.00	0.00	16.84	16.54	6.61	0.58	0.00	0.00	0.00	0.00	PASS
Sample #2	20.50	20.61	7.05	-1.35	0.00	0.00	26.17	26.05	6.81	-1.88	0.00	0.00	0.00	0.00	PASS
Sample #3	20.18	20.11	7.35	5.14	0.00	0.00	23.65	23.26	6.54	4.76	0.00	0.00	0.00	0.00	PASS
Sample #4	21.98	21.87	7.24	0.07	0.00	0.00	16.19	15.76	6.50	-0.24	0.00	0.00	0.00	0.00	PASS
Sample #5	24.70	24.67	6.58	5.58	0.00	0.00	22.05	21.67	6.32	5.31	0.00	0.00	0.00	0.00	PASS
Sample #6	13.29	13.32	7.36	4.45	0.00	0.00	13.35	12.86	7.68	4.08	0.00	0.00	0.00	0.00	PASS
Sample #7	15.44	15.39	7.09	1.74	0.00	0.00	16.95	16.52	7.13	1.42	0.00	0.00	0.00	0.00	PASS
Sample #8	23.75	23.66	7.12	-2.83	0.00	0.00	25.91	25.72	6.65	-3.38	0.00	0.00	0.00	0.00	PASS
Sample #9	17.16	16.94	7.47	8.85	0.00	0.00	17.20	16.96	6.98	8.61	0.00	0.00	0.00	0.00	PASS
Sample #10	17.97	17.92	6.95	5.19	0.00	0.00	22.85	22.71	7.25	4.76	0.00	0.00	0.00	0.00	PASS
Sample #11	17.23	17.31	7.14	4.63	0.00	0.00	14.95	14.60	7.44	4.45	0.00	0.00	0.00	0.00	PASS
Sample #12	11.07	10.65	7.52	3.55	0.00	0.00	14.91	14.37	7.41	3.06	0.00	0.00	0.00	0.00	PASS
Sample #13	20.88	20.69	7.55	-2.49	0.00	0.00	19.21	18.98	6.90	-2.84	0.00	0.00	0.00	0.00	PASS
Sample #14	17.80	17.78	7.18	3.52	0.00	0.00	13.40	13.02	7.54	3.31	0.00	0.00	0.00	0.00	PASS
Sample #15	19.18	19.26	7.29	-0.92	0.00	0.00	15.40	14.97	7.43	-1.34	0.00	0.00	0.00	0.00	PASS
Sample #16	21.08	21.05	6.83	2.40	0.00	0.00	15.88	15.42	7.75	1.99	0.00	0.00	0.00	0.00	PASS
Sample #17	17.33	17.32	7.26	7.01	0.00	0.00	16.44	15.97	6.62	6.81	0.00	0.00	0.00	0.00	PASS
Sample #18	13.74	13.45	7.22	-1.05	0.00	0.00	18.87	18.41	7.12	-1.47	0.00	0.00	0.00	0.00	PASS
Sample #19	24.09	24.07	7.01	3.77	0.00	0.00	24.29	23.96	6.83	3.32	0.00	0.00	0.00	0.00	PASS
Sample #20	11.26	11.30	7.69	-1.45	0.00	0.00	15.44	15.08	6.78	-1.98	0.00	0.00	0.00	0.00	PASS

Confiden

7. QC PROCESS

WISOL	Process	ZigBee	QC PROCESS [Zigbee_Module]	No.	RP-M	Rev.	1
	Range	All procedure		Dept.	QC	Page	1/2

PROCESS Set Up			MONITORING and MEASURING		Management				ETC
Mark	Process	Materials	Manage / Inspect	Standard	Manager	Method	Tool	Record	
▽	INCOMING INSPECTION	- PCB & IC &Chip	- Raw material inspection report [Check Approval Sepc] - Request document for special	Import Inspect Standard [Raw material operate instruction] (WQZ-Q-0002)	IQC	A.Q.L [KS Q ISO 2859-1]	Micro Scope PGM(IQ_View) Analyzer	- I.Q.C check Master List[F201-011] - Import Inspect report[F201-008]	
○	SCREEN PRINT	- Solder Paste - Metal Mask	- AUTO CLEANING [1 time /5 sheets] - SOLDER PASTE storage condition - Print check : Collapse, Lack, Short	Screen Print Operate Standard	OP		I-CON	- Metal Mask revision management book	
◇	3D Inspection		- Shot, Shape fault check - Measure : Volume, area, height - R chart	SPL3D Lead height measure standard	OP PQC	Total Inspection	HS60	- HDD automatic saving - Lead spread Check Sheet	CTQ process [Volume control]
○	MOUNT	-Chip (Res, Condenser) -Fixture (IC, Connector, Filter, Coil)	- Check component layout - Check mount - Manage adhesive/mount for each M/C - Material exchange → Bar Code System	Rate : 99.9 %	OP		NXT4M YG200	- Production Report [B201-001] - Material exchange LOG SHEET [Write Material Lot No]	
◇	2D_VISION	- Master Sample	- Excess, Shortage, Short, Unequipped, Misequipped, Inverse, Dslocate/Bias, Island/Part add	VISION Operate Standard	OP	Total Inspection	VQS-HDL350	- Master Sample Check Sheet [Write Debugging history]	
○	MOUNT	- Shield Case	- Check mount - Check component layout - Material exchange → Bar Code System	Rate : 99.9 %	OP		YG-100R	- Production Report [B201-001] - Material exchange LOG SHEET [Write Material Lot No]	
○	REFLOW	- N2 & Air	- Manage Profile (Temperature) - Temperature condition per section Sheet (R chart)	REFLOW Operate Standard Peak Temp : 240±5℃	Reflow Eng'r	1 time/1 day	N30-G102	- REFLOW PROFILE	CTQ process [Temperature per section]
◇	VISUAL	- Micro magnifying glass - Microscope - Equipment sample	- Equipment status of each part, antenna thickness(T), Scratch(PCB, Shield)	VISUAL Check Standard	VI	Total Inspection	VQS-HDL350	- VI Inspection Log Sheet [F202-006]	
◇	X-RAY		- Shield Case inside [Dislocate, OPEN , SHORT , VOID]	Operate Instruction In Import Inspect Standard [X-Ray Inspect standard]	VI / PQC	10% /Magazine당	X-EYE 5000B	- X Ray daily report[B202-007]	
○	MONITORING		- Model Bom List Check - Check Material exchange System comply	VISUAL Check Standard	PQC	Line당 / Time당	Visual	- PQC Inspection Log Sheet [B201-008]	
◇	INCOMING INSPECTION	- SMT Assembly	- SMT Ass'y outgoing report - SMT material exchange report	Import Inspect Standard[SMT Ass'y operate manual] (WQZ-Q-0002)	IQC	A.Q.L [KS Q ISO 2859-1]	Micro Scope PGM (IQ_View) Analyzer	- I.Q.C check Master List[F201-011] - Import Inspect report[F201-008]	

Confi

WISOL	Process	ZigBee	QC PROCESS [Zigbee_Module]	No.	RP-M	Rev.	1
	Range	All procedure		Dept.	QC	Page	2/2

PROCESS Set Up			MONITORING and MEASURING		Management				ETC
Mark	Process	Materials	Manage / Inspect	Standard	Manager	Method	Tool	Record	
○	DICING	- SMT Assembly - Tray - DI Water	- Blade thickness (under 0.1㎜) (Life Time : 70,000 round)	DICING process standards	Process Manager		NDS-1012	- Dicing process daily report [B201-012]	
○	CLEANING	- DI Water	- CLN Time : 40±10sec DRY Time : 40±10sec	Cleaning process standards	Process Manager		NDS-50/80 NUT-20/30/40		
○	UV Induration	- UV Lamp	- Check remain of Tape regin	UV Induration process standards	Process Manager		NUV-50/80		
◇	LENGTH Measure	- Issue T-Crad	- Length manage [14.90~15.00㎜,17.90~18.00㎜] - Classify Sub Lot	LENGTH measuring process standards	Process Inspector	1Pcs/1Tray (1ea/90ea)	Bernier calipers	- Dimenaion measuring Log Sheet [D301-002]	
○	ROM WRITING	- Vaccum Pen	- Test Program Set-up - JIG management	ROM WRIGHTING process standards (WQZ-P-0001)	Process Inspector		WS-214PC WS-MU200	- Rom Writing daily report [B201-029]	
◇	RF Characteristic Inspect	- Golden Sample - Vaccum Pen	① PER [under 1%] ② AVG Power [2 ~ 8dBm] ③ Peak Power [2 ~ 8dBm] ④ Frequency deviation [-50 ~ 50kHz] ⑤ EVM [under 35%]	RF_Characteristic Inspect standards (WQZ-P-0002)	Process Inspector	Total Inspection	[IQ_VIEW] [(WS-T8214PC]	- RF daily report - RF Inspect daily report[B201-011] - RF Inspect changing history Sheet [B202-0013]	CTF/CTQ process CTF:Frequency deviation CTQ:Receive sensitivity
○	INK MARKING	- Ink : 3103 - Sol : 3501	- Marking status [Limit sample]	INK MARKING process standards (WQZ-P-0003)	Process Inspector	Total Inspection	LINX7300	- Ink Marking daily report [B201-014]	
○	USER FIRMWARE WRITING	- Vaccum Pen	- User Program Set-up - JIG management - MAC management book	USER FIRMWARE WRITING process standards (WQZ-P-0004)	Process Inspector		WS-214PC WS-MU200	- User Firmware Writing daily report [B201-029]	USER DEMAND
○	TAPING	- Carrier Tape - Cover Tape	- Sealing temperature [170℃ ± 5℃] - Taping Counter [500EA/1Reel]	TAPING process standards (WQZ-P-0005)	Process Inspector	Total Inspection	PK5101	- Laser Marking daily report [B201-014]	
○	PACKING	- Out Box - vinyl - Silica gel - Box Label	- Check quantity - Out Box Label Print status - Label check per model	PACKING process standards (WQZ-P-0006)	Packing manager	Each Box	AZ600 TTP-243Pro	- Product outgoing history book[B201-015]	
◇	OUTGOING INSPECTION	- Golden Sample - Vaccum Pen	- Check product (Appearance) - Check performance (Set-function) - Mac Address usage history	Outgoing inspection standards (WQZ-Q-0003)	O.Q.C	Sampling (20/4,000) n=20 c=0	[IQ_VIEW] WS-214PC	- O.Q.C Inspect history Sheet F204-002] - Outgoing inspection report [F204-001]	Lot: 1Lot→4,000
▽	SHIPPING		- Land transport		Logistic			- Delivery statement - Changing point report	

Confi

8. PACKAGE

8.1. Dimensions of tape

* Resistance: 1×10^{5}~1×10^{11} [ohm]

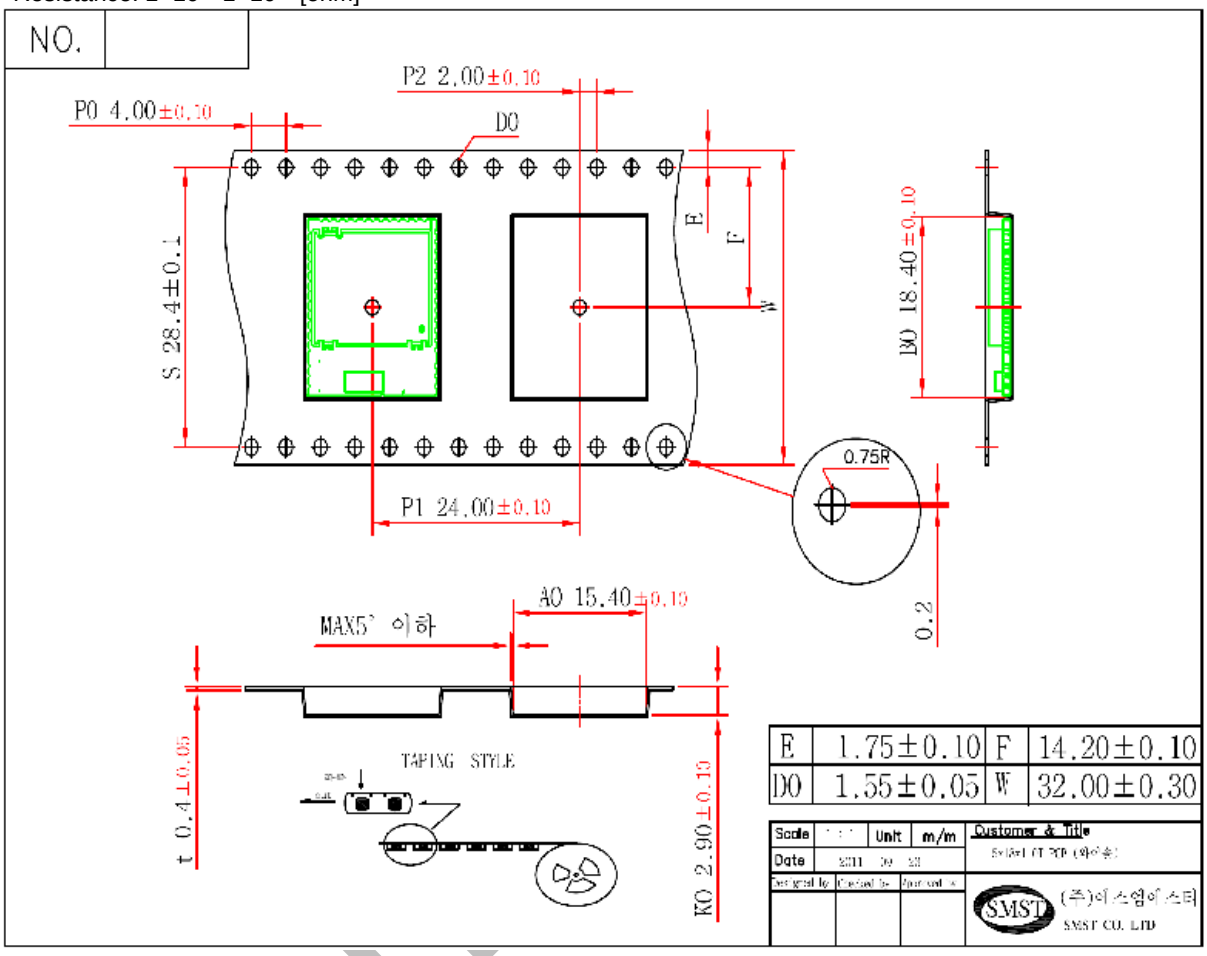

8.2. Dimensions of Reel

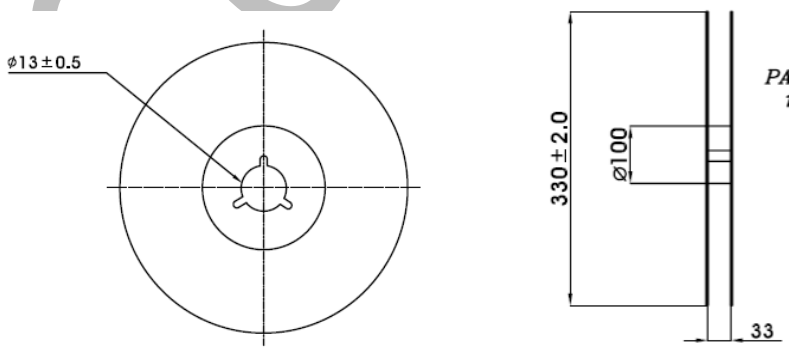

RadioPulse Inc

3rd Fl., Hans B/D II, 111-6 Seongnae-Dong,
Gangdong-Gu, Seoul, Korea, 134-883, Korea

URL: www.radiopulse.co.kr
Tel: +82-2-478-2963~5
Fax: +82-2-478-2967

sales@radiopulse.co.kr

Confidential

About RadioPulse Inc.

RadioPulse is a Being Wireless solution provider offering wireless communication & network technologies and developing next generation wireless networking technologies.

The new wireless networking solutions envisioned by RadioPulse will enable user to enjoy wireless technologies with easy interface.

Founded in April of 2003, the company maintains it headquarters and R&D center in Seoul, Korea.

Copyright (c) 2014 RadioPulse. All rights reserved.

FCC compliance Information

FCC Information to User

This equipment has been tested and found to comply with the limits for a Class B digital device, pursuant to Part 15 of the FCC Rules. These limits are designed to provide reasonable protection against harmful interference in a residential installation. This equipment generates, uses and can radiate radio frequency energy and, if not installed and used in accordance with the instructions, may cause harmful interference to radio communications. However, there is no guarantee that interference will not occur in a particular installation. If this equipment does cause harmful interference to radio or television reception, which can be determined by turning the equipment off and on, the user is encouraged to try to correct the interference by one of the following measures:

• Reorient or relocate the receiving antenna.

• Increase the separation between the equipment and receiver.

• Connect the equipment into an outlet on a circuit different from that to which the receiver is connected.

• Consult the dealer or an experienced radio/TV technician for help.

Caution

Modifications not expressly approved by the party responsible for compliance could void the user's authority to operate the equipment.

FCC Compliance Information : This device complies with Part 15 of the FCC Rules. Operation is subject to the following two conditions:

(1) This device may not cause harmful interference, and

(2) this device must accept any interference received, including interference that may cause undesired operation

This device is intended only for OEM integrators under the following conditions:

1) The transmitter module may not be co-located with any other transmitter or antenna,

2) OEM shall not supply any tool or info to the end-user regarding to Regulatory Domain change.

As long as 2 conditions above are met, further transmitter test will not be required. However, the OEM integrator is still responsible for testing their end-product for any additional compliance requirements required with this module installed (for example, digital device emissions, PC peripheral requirements, etc.).

IMPORTANT NOTE: In the event that these conditions can not be met (for example certain

laptop configurations or co-location with another transmitter), then the FCC authorization is no longer considered valid and the FCC ID can not be used on the final product. In these circumstances, the OEM integrator will be responsible for re-evaluating the end product (including the transmitter) and obtaining a separate FCC authorization.

End Product Labeling

To satisfy FCC exterior labeling requirements, the following text must be placed on the exterior of the end product : **Contains Transmitter Module FCC ID : UNTRP-2470BWR**

Manual Information To the End User

The OEM integrator has to be aware not to provide information to the end user regarding how to install or remove this RF module in the user's manual of the end product which integrates this module. The end user manual shall include all required regulatory information/warning as show in this manual.