Sound Merchandising DBA IntelliTouch Communications™

Application
For
47 CFR Part 15 Certification

Unlicensed Personal Communication Service Devices
(Base Unit)

FCC ID: UNVITC60202

Test Report Number: 06208721

Issue Date: October 26, 2006

KL/ Ann Choy

- The test results reported in this test report shall refer only to the sample actually tested and shall not refer or be deemed to refer to bulk from which such a sample may be said to have been obtained.
- This report shall not be reproduced except in full without prior authorization from Intertek Testing Services Hong Kong Limited.
- For Terms And Conditions of the services, it can be provided upon request.
- The evaluation data of the report will be kept for 3 years from the date of issuance.

Intertek Testing Services Hong Kong Ltd.
2/F., Garment Centre, 576 Castle Peak Road, Kowloon, Hong Kong.
Tel: (852) 2173 8888 Fax: (852) 2741 1693 Website: www.hk.intertek-etlsemko.com

LIST OF EXHIBITS

INTRODUCTION

EXHIBIT 1: Summary of Tests

EXHIBIT 2: General Description

EXHIBIT 3: System Test Configuration

EXHIBIT 4: Measurement Results

EXHIBIT 5: Equipment Photographs

EXHIBIT 6: Product Labelling

EXHIBIT 7: Technical Specifications

EXHIBIT 8: Instruction Manual

EXHIBIT 9: UTAM Affidavit

EXHIBIT 10: Confidentiality Request

MEASUREMENT/TECHNICAL REPORT

Sound Merchandising DBA IntelliTouch Communications™

Model: SBC-6028-2HC, VZN-6020, VZN-60HC, VZN-6028-2HC, ATV-6020, ATV-60HC, ATV-6028-2HC, QWT-6020, QWT-60HC, QWT-6028-2HC, BLS-6020, BLS-60HC, BLS-6028-2HC, CNB-6020, CNB-60HC, CNB-6028-2HC, CTL-6020, CTL-60HC, CTL-6028-2HC, SBC-6020, SBC-6050, SBC-60HC, SBC-6058-2HC, ITC-6020, ITC-60HC, ITC-6028-2HC

FCC ID: UNVITC60202

This report concerns (check one:) Original Grant __X__ Class II Change ___

Equipment Type : PUB - Part 15 Unlicensed PCS Base Station

Deferred grant requested per 47 CFR 0.457(d)(1)(ii)? Yes _____ No __X__

If yes, defer until :

_____
Date

Company Name agrees to notify the Commission by: _____
Date

of the intended date of announcement of the product so that the grant can be issued on that date.

Transition Rules Request per 15.37? Yes _____ No __X__

If no, assumed Part 15, Subpart D for Unlicensed Personal Communication Service Device - the new 47 CFR [04-05-05 Edition] Provision.

Report prepared by: Lam Chun Cheong, Kenneth

Intertek Testing Services Hong Kong Ltd.
2/F., Garment Centre,
576 Castle Peak Road,
Kowloon, Hong Kong.
Phone : 852-2173-8474
Fax: 852-2741-1693

Table of Contents

1.0 Summary of Test Results 7

2.0 General Description 10
2.1 Product Description 10
2.2 Technical Description 10
2.3 Related Submittal(s) Grants 11
2.4 Test Methodology 11
2.5 Test Facility 11

3.0 System Test Configuration 13
3.1 Justification 13
3.2 Conducted Emission Test Configuration 14
3.3 Conducted Monitoring and Operational Test Configuration 14
3.4 EUT Exercising Software 14
3.5 Support Equipment List and Description 15
3.6 Measurement Uncertainty 16
3.7 Equipment Modification 16

4.0 Measurement Results 18
4.1 Antenna Requirement 18
4.2 Digital Modulation Techniques 18
4.3 Emission Bandwidth 19
4.4 Directional Gain of the Antenna 21
4.5 Peak Transmit Power 22
4.6 Power Spectral Density 23
4.7 Automatic Discontinuation of Transmission 24
4.8 Unwanted Emission Inside the Sub-Band 25
4.9 Emissions Outside the Sub-Band 26
4.9.1 Field Strength Calculation 27
4.9.2 Average Factor Calculation and Transmitter ON Time Measurements 28
4.9.3 Radiated Emissions Configuration Photographs 29
4.9.4 Radiated Emissions Data 30
4.10 AC Power Lines Conducted Emissions from Transmitter portion of EUT 36
4.10.1 AC Power Lines Conducted Emissions Configuration Photographs 37
4.10.2 AC Power Line Conducted Emissions Data 38
4.11 Radiated Emissions from Computing Device Peripheral Portion of EUT 39
4.12 AC Power Lines Conducted Emissions from Computing Device Peripheral Portion of EUT 40
4.13 Radio Frequency Radiation Exposure 41
4.14 Frame Repetition Stability 42
4.15 Fame Period and Jitter 43
4.16 Carrier Frequency Stability 44
4.17 Monitoring Threshold 45
4.17.1 Lower Monitoring Threshold 46
4.17.2.1 Upper Monitoring Threshold 47
4.17.2.2 Least Interfered Channel (LIC) Selection 48
4.17.2.3 Least Interfered Channel (LIC) Confirmation 49

Table of Contents

4.17.2.4 Maximum Spectrum Occupance 49
4.18 Monitoring Time 50
4.19 Maximum Transmit Period 51
4.20 System Acknowledgement 52
4.21 Random Waiting 53
4.22 Monitoring Bandwidth 54
4.23 Maximum Reaction Time 55
4.24 Monitoring Antenna 56
4.25 Duplex Connections 57
4.26 Alternative Monitoring Interval for Co-located Device 59
4.27 Fair Access 60

5.0 Equipment Photographs 62

6.0 Product Labelling 64

7.0 Technical Specifications 66

8.0 Instruction Manual 68

9.0 UTAM Affidavit 70

10.0 Confidentiality Request 72

List of Attached Files

Exhibit Type	File Description	Filename
Operation Description	Technical Description	descri.pdf
Test Report	Test Report	report.pdf
Test Report	Emission Bandwidth and Test Frequency Plots	26bw.pdf
Test Report	Peak Transmit Power Plots	peaktp.pdf
Test Report	Power Spectral Density Plots	psd.pdf
Test Report	Unwanted Emission Inside Sub-Band Plots	inband.pdf
Test Report	Transmitter ON Time Plots	txon.pdf
Test Report	AC Lines Conducted Emission Data	conduct.pdf
Test Setup Photo	Radiated Emission Test Configuration	config photos.doc
Test Setup Photo	AC Lines Conducted Emission Test Configuration	
RF Exposure Info	RF Safety	RF exposure info.pdf
Attestation Statements	Fair Access Declaration	fair access.pdf
External Photos	External Photo	external photos.doc
Internal Photos	Internal Photo	internal photos.doc
ID Label/Location Info	Label Artwork and Location	label.pdf
Block Diagrams	Block Diagram	block.pdf
Schematics	Circuit Diagram	circuit.pdf
User Manual	User Manual	manual.pdf
Cover Letter	UTAM affidavit	utam.pdf
Cover Letter	Confidentiality Request	request.pdf
Declaration Letter	Declaration	declaration.pdf

EXHIBIT 1
SUMMARY OF TEST RESULTS

1.0 Summary of Test Results

Sound Merchandising DBA IntelliTouch Communications™

Model: SBC-6028-2HC, VZN-6020, VZN-60HC, VZN-6028-2HC, ATV-6020, ATV-60HC, ATV-6028-2HC, QWT-6020, QWT-60HC, QWT-6028-2HC, BLS-6020, BLS-60HC, BLS-6028-2HC, CNB-6020, CNB-60HC, CNB-6028-2HC, CTL-6020, CTL-60HC, CTL-6028-2HC, SBC-6020, SBC-6050, SBC-60HC, SBC-6058-2HC, ITC-6020, ITC-60HC, ITC-6028-2HC

FCC ID: UNVITC60202

General Technical Requirements				
Test Items	**FCC Part 15 Section**	**Test Procedure ANSI C63.17 / ANSI C63.4 ***	**Results**	**Details see section**
Antenna Requirement	15.317	---	Pass	4.1
Digital Modulation Techniques	15.319(b)	6.1.4	Pass	4.2
Emission Bandwidth	15.323(a)	6.1.3	Pass	4.3
Directional Gain of the Antenna	15.319(e)	4.3.1	Pass	4.4
Peak Transmit Power	15.319(c)	6.1.2	Pass	4.5
Power Spectral Density	15.319(d)	6.1.5	Pass	4.6
Automatic Discontinuation of Transmission	15.319(f)	---	Pass	4.7
AC Power Lines Conducted Emissions from Transmitter Portion of EUT	15.315	7 *	Pass	4.10
Radiated Emissions from Computing Device Peripheral Portion of EUT	15.109(a)	8 *	NA	4.11
AC Power Lines Conducted Emissions from Computing Device Peripheral Portion of EUT	15.107(a)	7 *	NA	4.12
Radio Frequency Radiation Exposure	15.319(i)	---	Pass	4.13

Test Engineer:

Felix Ng
Lead Engineer

Date: October 26, 2006

Approved By:

Lam Chun Cheong, Kenneth
Senior Lead Engineer

Date: October 26, 2006

1.0 **Summary of Test Results (continued)**

Sound Merchandising DBA IntelliTouch Communications™

Model: SBC-6028-2HC, VZN-6020, VZN-60HC, VZN-6028-2HC, ATV-6020, ATV-60HC, ATV-6028-2HC, QWT-6020, QWT-60HC, QWT-6028-2HC, BLS-6020, BLS-60HC, BLS-6028-2HC, CNB-6020, CNB-60HC, CNB-6028-2HC, CTL-6020, CTL-60HC, CTL-6028-2HC, SBC-6020, SBC-6050, SBC-60HC, SBC-6058-2HC, ITC-6020, ITC-60HC, ITC-6028-2HC

FCC ID: UNVITC60202

Specific Requirements for UPCS Device				
Test Items	**FCC Part 15 Section**	**Test Procedure ANSI C63.17 / ANSI C63.4 ***	**Results**	**Details see section**
Unwanted Emission Inside the Sub-Band	15.323(d)	6.1.6.1	Pass	4.8
Emissions Outside the Sub-Band	15.323(d)	6.1.6.2	Pass	4.9
Frame Repetition Stability	15.323(e)	6.2.2	Pass	4.14
Frame Period and Jitter	15.323(e)	6.2.3	Pass	4.15
Carrier Frequency Stability	15.323(f)	6.2.1	Pass	4.16
Lower Monitoring Threshold	15.323(c)(2)	7.3.1(b)	NA	4.17.1
Upper Monitoring Threshold	15.323(c)(5)	7.3.2	Pass	4.17.2.1
Least Interfered Channel (LIC) Selection,	15.323(c)(5)	7.3.3	Pass	4.17.2.2
Least Interfered Channel (LIC) Confirmation	15.323(c)(5)	7.3.3 , 7.3.4	Pass	4.17.2.3
Maximum Spectrum Occupancy	15.323(c)(5)	---	Pass	4.17.2.4
Monitoring Time	15.323(c)(1)	7.3.4	Pass	4.18
Maximum Transmit Period	15.323(c)(3)	---	Pass	4.19
System Acknowledgement	15.323(4)	8.1 or 8.2	Pass	4.20
Random Waiting	15.323(c)(6)	8.1.2 & 8.1.3	Pass	4.21
Monitoring Bandwidth	15.323(c)(7)	7.4	Pass	4.22
Maximum Reaction Time	15.323(c)(7)	7.5	Pass	4.23
Monitoring Antenna	15.323(c)(8)	4	Pass	4.24
Duplex Connections	15.323(c)(10)	8.3	NA	4.25
Alternative Monitoring Interval for Co-located Device	15.323(c)(11)	8.4	NA	4.26
Fair Access	5.323(c)(12)	---	Pass	4.27

Test Engineer:

Felix Ng
Lead Engineer

Date: October 26, 2006

Approved By:

Lam Chun Cheong, Kenneth
Senior Lead Engineer

Date: October 26, 2006

EXHIBIT 2
GENERAL DESCRIPTION

2.0 General Description

2.1 Product Description

The SBC-6028-2HC is a 1.9GHz Digital Modulation Cordless Phone with Caller ID and Speakerphone - Base Unit. It operates at frequency range of 1921.536MHz to 1928.448MHz with 5 channels. The unit is capable of either tone or pulse dialing. The internal power supply's isolation is accomplished through a power transformer having an adequate dielectric rating. The circuit wiring is consistent under the requirement of part 68.

The base unit has a page key, which is used to communicate with handset unit.

The antennas used in base unit and handset are integral, and the test sample is a prototype.

The Model: VZN-6020, VZN-60HC, VZN-6028-2HC, ATV-6020, ATV-60HC, ATV-6028-2HC, QWT-6020, QWT-60HC, QWT-6028-2HC, BLS-6020, BLS-60HC, BLS-6028-2HC, CNB-6020, CNB-60HC, CNB-6028-2HC, CTL-6020, CTL-60HC, CTL-6028-2HC, SBC-6020, SBC-6050, SBC-60HC, SBC-6058-2HC, ITC-6020, ITC-60HC, and ITC-6028-2HC are the same as the Model: SBC-6028-2HC in hardware aspect except the cosmetic changes only. VZN-6020, ATV-6020, QWT-6020, BLS-6020, CNB-6020, CTL-6020, SBC-6020, SBC-6050, ITC-6020 has one base unit and one handset, VZN-60HC, ATV-60HC, QWT-60HC, BLS-60HC, CNB-60HC, CTL-60HC, SBC-60HC, ITC-60HC has one handset and one extra charger, VZN-6028-2HC, ATV-6028-2HC, QWT-6028-2HC, BLS-6028-2HC, CNB-6028-2HC, CTL-6028-2HC, SBC-6028-2HC, SBC-6058-2HC, ITC-6028-2HC has one base unit, two handsets and one extra charger. The difference in trade name, model numbers and color serves as marketing strategy.

Connection between the device and the telephone network is accomplished through the use of USOC RJ11C in the 2-wire loop calling central office line.

2.2 Technical Description

The circuit description and digital modulation techniques description are saved as filename: descri.pdf.

2.3 Related Submittal(s) Grants

This is an application for Certification of a PUB - Part 15 Unlicensed PCS Base Station. The device is also subject to Part 68 Registration.

Part of a system operates with another device that requires a certification application. The related application has been filed at the same time as this application under FCC ID: UNVITC60202H.

A Verification report has been prepared for the digital device portion.

2.4 Test Methodology

The radiated emission measurements for unintentional radiator and AC power line-conducted emission measurements were performed according to the test procedures specified in ANSI C63.4 (2003). The radiated emission measurements for intentional radiator contained in UPCS device, conducted emission measurements, Listen Before Transmit (LBT) tests, Time Frame and Frequency Stability tests were performed according to the test procedures specified in Revision Draft ANSI C63.17 (2006). All radiated measurements were performed in Open Area Test Sites. Preliminary scans were performed in the Open Area Test Sites only to determine worst case modes. All radiated tests were performed at an antenna to EUT distance of 3 meters, unless stated otherwise in the "Justification Section" of this Application. All other measurements were made in accordance with the procedures in 47 CFR Part 2.

2.5 Test Facility

The open area test site and conducted measurement facility used to collect the emission data is located at Garment Centre, 576 Castle Peak Road, Kowloon, Hong Kong. This test facility and site measurement data have been fully placed on file with the FCC.

EXHIBIT 3
SYSTEM TEST CONFIGURATION

3.0 System Test Configuration

3.1 Justification

For emissions testing, the equipment under test (EUT) was setup to transmit continuously in burst mode with pseudo-random data to simplify the measurement methodology. Care was taken to ensure proper power supply voltages during testing. During testing, all cables were manipulated to produce worst-case emissions. The handset was powered by a fully charged battery.

For the measurements, the EUT was attached to a plastic stand if necessary and placed on the wooden turntable. If the base unit attached to peripherals, they were connected and operational (as typical as possible).

The signal was maximized through rotation and placement in the three orthogonal axes. The antenna height and polarization were varied during the search for maximum signal level. The antenna height was varied from 1 to 4 meters. Detector function was in peak mode. Radiated emissions are taken at three meters unless the signal level was too low for measurement at that distance. If necessary, a pre-amplifier was used and/or the test was conducted at a closer distance.

All readings were extrapolated back to the equivalent three meters reading using inverse scaling with distance. The spectrum analyzer resolution bandwidth was approximately 1% of the EUT emission bandwidth, unless otherwise specified.

Radiated emission measurements were performed from the lowest radio frequency signal generated in the device which is greater than 9 kHz to the tenth harmonic of the highest fundamental frequency or to 40 GHz, whichever is lower.

3.2 Conducted Emission Test Configuration

The setup and equipment setting were made in accordance with ANSI C63.17. The antenna of EUT transmitter was replaced by a coaxial cable. The impendence matching of connection, cable loss and external RF attenuator are taken into account. The EUT was arranged to communicate via a fixed carrier frequency between its transmitter and a companion device. The transmission was configured in burst mode with pseudo-random data as typical as normal operation.

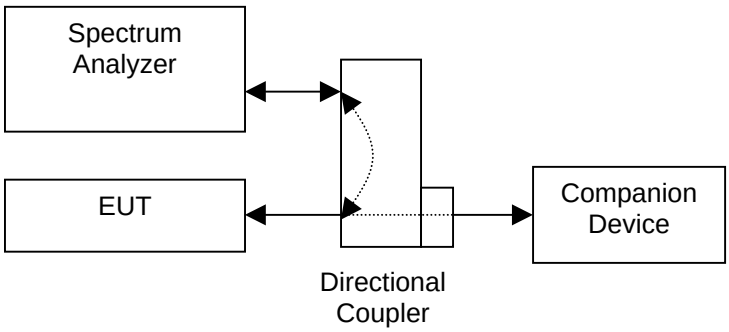

Figure 3.2.1

3.3 Conducted Monitoring and Operational Test Configuration

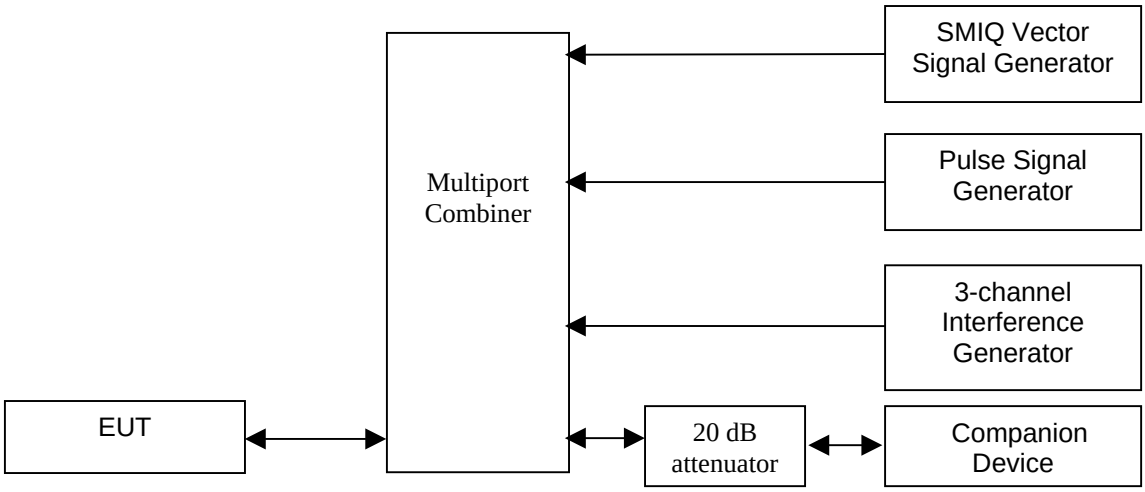

Figure 3.3.1

3.4 EUT Exercising Software

The EUT exercise program used during radiated and conducted testing was designed to exercise the various system components in a manner similar to a typical use.

3.5 Support Equipment List and Description

The FCC ID's for all equipment, plus descriptions of all cables used in the tested system are:

HARDWARE:

The unit was operated standalone. An AC adaptor and a battery (provided with the unit) were used to power the device. Their descriptions are listed below.

(1) Base Unit: An AC adaptor (120VAC to 6.0VDC 200mA, Model: KU1B-060-0200D) (Supplied by Client)
(2) Handset: A "Ni-MH" type rechargeable battery (2.4V 750mAh) (Supplied by Client)

CABLES:

(1) Telecommunication cable with RJ11C connectors (1m, unshielded), terminated (Supplied by Intertek)

OTHERS:

There are no special accessories necessary for compliance of this product.

3.6 Measurement Uncertainty

When determining of the test conclusion, the Measurement Uncertainty test has been considered.

3.7 Equipment Modification

Any modifications installed previous to testing by Sound Merchandising DBA IntelliTouch Communications™ will be incorporated in each production model sold/leased in the United States.

No modifications were installed by ETL Division, Intertek Testing Services Hong Kong Ltd.

All the items listed under section 3.0 of this report are confirmed by:

Confirmed by:

Lam Chun Cheong, Kenneth
Senior Lead Engineer
Intertek Testing Services Hong Kong Ltd.
Agent for Sound Merchandising DBA IntelliTouch Communications™

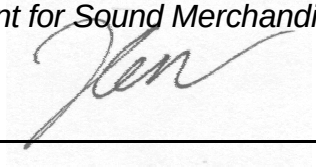

_____Signature

___October 26, 2006_____Date

EXHIBIT 4
MEASUREMENT RESULTS

4.0 **Measurement Results**

4.1 Antenna Requirement, FCC Rule 15.317:

EUT must meet the antenna requirement of FCC Rule 15.203.

[×] EUT uses a permanently attached antenna which is considered sufficient to comply with the provisions of this rule. Please refer to Exhibit 5: Internal Photos for more details.

[ ] EUT uses a unique antenna jack or electrical connector which is considered sufficient to comply with the provisions of this rule. Please refer to Exhibit 5: Internal Photos for more details.

4.2 Digital Modulation Techniques, FCC Rule 15.319(b):

All transmissions must use only digital modulation techniques.

The requirements are made in accordance with ANSI C63.17 sub-clause 6.1.4.

Attestation:

Please refer to the technical description in section 2.2 or relevant DECT standards for more details.

4.3 Emission Bandwidth, FCC Rule 15.323(a):

Operation shall be contained within the 1920 – 1930 MHz band. The emission bandwidth (*B*) shall be less than 2.5 MHz and greater than 50 kHz.

Measurements are made in accordance with ANSI C63.17 sub-clause 6.1.3. Test setup is shown in section 3.2 Figure 3.2.1.

Test Results:

I. Traffic Carrier

Channel	Channel Frequency (MHz)	Measuring Signal Level	Measured Emission Bandwidth (MHz)	Results
Lowest	1921.536	26 dB down	1.40	Pass
Highest	1928.448	26 dB down	1.41	Pass

II. Dummy Carrier

Channel	Channel Frequency (MHz)	Measuring Signal Level	Measured Emission Bandwidth (MHz)	Results
Lowest	1921.536	26 dB down	1.37	Pass
Highest	1928.448	26 dB down	1.33	Pass

The following test data are used in section 4.22 for monitoring bandwidth measurement.

I. Traffic Carrier

Channel	Channel Frequency (MHz)	Signal Level	Measured Frequency (MHz)
Lowest	1921.536	Peak	1.921536000
		6 dB down	1.921511050
			1.921570930
		12 dB down	1.921032008
			1.922039992
Highest	1928.448	Peak	1.928448000
		6 dB down	1.928423050
			1.928472950
		12 dB down	1.927944008
			1.928942012

II. Dummy Carrier

Channel	Channel Frequency (MHz)	Signal Level	Measured Frequency (MHz)
Lowest	1921.536	Peak	1.921536000
		6 dB down	1.921511050
			1.921570930
		12 dB down	1.921131808
			1.921830411
Highest	1928.448	Peak	1.928448000
		6 dB down	1.928093709
			1.928472950
		12 dB down	1.928043808
			1.928652591

4.3 Emission Bandwidth, FCC Rule 15.323(a): - Continued

Please refer to the attached plots for more details:

Plot 1A: Lowest Channel 26dB Emission Bandwidth (Traffic Carrier)
Plot 1B: Lowest Channel Test Frequency at -6dB points (Traffic Carrier)
Plot 1C: Lowest Channel Test Frequency at -12dB points (Traffic Carrier)
Plot 1D: Highest Channel 26dB Emission Bandwidth (Traffic Carrier)
Plot 1E: Highest Channel Test Frequency at -6dB points (Traffic Carrier)
Plot 1F: Highest Channel Test Frequency at -12dB points (Traffic Carrier)

Plot 1G: Lowest Channel 26dB Emission Bandwidth (Dummy Carrier)
Plot 1H: Lowest Channel Test Frequency at -6dB points (Dummy Carrier)
Plot 1I: Lowest Channel Test Frequency at -12dB points (Dummy Carrier)
Plot 1J: Highest Channel 26dB Emission Bandwidth (Dummy Carrier)
Plot 1K: Highest Channel Test Frequency at -6dB points (Dummy Carrier)
Plot 1L: Highest Channel Test Frequency at -12dB points (Dummy Carrier)

The plots of emission bandwidth and test frequency are saved as filename: 26bw.pdf

4.4 Directional Gain of the Antenna, FCC Rule FCC 15.319(e):

The peak transmit power shall be reduced by the amount in dB that the maximum directional gain of the antenna exceeds 3 dBi.

The requirements are made in accordance with ANSI C63.17 sub-clause 4.3.1.

[×] Manufacturer declares that the directional gain of the antenna is less than or equal to 3dBi. No peak transmit power reduction is required.

[ ] Manufacturer declares that the directional gain of the antenna is greater than 3dBi. The peak transmit power shall be reduced by _____ dB.

4.5 Peak Transmit Power, FCC Rule 15.319(c):

The peak transmit power (P_{EUT}) shall not exceed 100μW multiplied by the square root of the emission bandwidth (B) in Hz or 5 $\log_{10} B$ – 10 dBm. The peak transmit power shall be reduced by the amount in dB that the maximum directional gain of the antenna exceeds 3 dBi.

Measurements are made in accordance with ANSI C63.17 sub-clause 6.1.2. Test setup is shown in section 3.2 Figure 3.2.1. The cable loss and/or external attenuation are included in OFFSET function of spectrum analyzer.

Calculation of Peak Transmit Power Limit (P_{max}):

[×] $P_{max} = 5 \log_{10} B - 10$ dBm when $G_A \leq 3$dBi

[ ] $P_{max} = 5 \log_{10} B - 10$ dBm – (G_A – 3dBi) when $G_A > 3$dBi

Where G_A = EUT Antenna Gain: 0 dBi

B = Measured Emission Bandwidth: (26dB down BW) in Hz

Test Results:

I. Traffic Carrier

Channel	Channel Frequency (MHz)	Measured Peak Transmit Power (dBm)	Limit (dBm)	Results
Lowest	1921.536	17.89	20.73	Pass
Highest	1928.448	18.17	20.75	Pass

II. Dummy Carrier

Channel	Channel Frequency (MHz)	Measured Peak Transmit Power (dBm)	Limit (dBm)	Results
Lowest	1921.536	17.89	20.68	Pass
Highest	1928.448	18.20	20.62	Pass

Please refer to the attached plots for more details:

Plot 2A: Lowest Channel Peak Transmit Power (Traffic Carrier)
Plot 2B: Highest Channel Peak Transmit Power (Traffic Carrier)
Plot 2C: Lowest Channel Peak Transmit Power (Dummy Carrier)
Plot 2D: Highest Channel Peak Transmit Power (Dummy Carrier)

The plots of peak transmit power are saved as filename: peaktp.pdf

4.6 Power Spectral Density, FCC Rule 15.319(d):

Power spectral density shall not exceed 3 mW (4.8dBm) in any 3 kHz bandwidth as measured with a spectrum analyzer having a resolution bandwidth of 3 kHz.

Measurements are made in accordance with ANSI C63.17 sub-clause 6.1.5. Test setup is shown in section 3.2 Figure 3.2.1.

Test Results:

I. Traffic Carrier

Channel	Channel Frequency (MHz)	Measured Power Spectral Density (dBm/3kHz)	Limit (dBm/3 kHz)	Results
Lowest	1921.536	-2.71	4.8	Pass
Highest	1928.448	-2.27	4.8	Pass

II. Dummy Carrier

Channel	Channel Frequency (MHz)	Measured Power Spectral Density (dBm/3kHz)	Limit (dBm/3 kHz)	Results
Lowest	1921.536	-1.71	4.8	Pass
Highest	1928.448	-1.82	4.8	Pass

Please refer to the attached plots for more details:

Plot 3A: Lowest Channel Power Spectral Density (Traffic Carrier)
Plot 3B: Highest Channel Power Spectral Density (Traffic Carrier)
Plot 3C: Lowest Channel Power Spectral Density (Dummy Carrier)
Plot 3D: Highest Channel Power Spectral Density (Dummy Carrier)

The plots of the power spectral density are saved as filename: psd.pdf

4.7 Automatic Discontinuation of Transmission, FCC Rule 15.319(f):

The EUT shall automatically discontinue transmission in case of either absence of information to transmit or operational failure. These provisions are not intended to preclude transmission of control and signaling information or use of repetitive codes used by certain digital technologies to complete frame or burst intervals.

Test Procedures:

The following tests simulate the reaction of EUT in case of either absence of information to transmit or operational failure after a connection of its companion device is established. Test setup is shown in section 3.2 Figure 3.2.1.

Test Descriptions and Results:

	Test Descriptions	Reaction of EUT	Results
1	Switch-off companion device	B	Pass
2	On Hook by companion device	B	Pass
3	Switch-off EUT	NA	NA
4	On Hook on EUT Side	NA	NA
5	Remove power from EUT	A	Pass
6	Remove power from companion device	B	Pass

A – Connection is terminated and, transmission ceases.

B – Connection is terminated but EUT transmits control or signaling information.

C – Connection is terminated but companion device transmits control or signaling information.

NA – Not applicable

[×] The manufacturer declares that the EUT can automatically discontinue transmission in case of either absent information to transmit or operational failure. The manufacturer's declaration is saved as filename: declaration.pdf

4.8 Unwanted Emission Inside the Sub-Band, FCC Rule 15.323(d):

Emissions inside the sub-band must comply with the following emission mask:

1. In the bands between 1*B* and 2*B* measured from the center of the emission bandwidth, emission shall be at least 30 dB below the permitted peak transmit power; i.e.-9.5 dBm

2. In the bands between 2*B* and 3*B* measured from the center of the emission bandwidth, emission shall be at least 50 dB below the permitted peak transmit power; i.e. -29.5 dBm

3. In the bands between 3*B* and the band edge, emission shall be at least 60 dB below the permitted peak transmit power. i.e. -39.5 dBm

Where *B* = emission bandwidth in Hz

Measurements are made in accordance with ANSI C63.17 sub-clause 6.1.6.1. Test setup is shown in section 3.2 Figure 3.2.1.

Test Results:

I. Traffic Carrier

Channel	Channel Frequency (MHz)	Results
Lowest	1921.536	Pass
Highest	1928.448	Pass

II. Dummy Carrier

Channel	Channel Frequency (MHz)	Results
Lowest	1921.536	Pass
Highest	1928.448	Pass

Please refer to the attached plots for more details:

Plot 4A: Lowest Channel Unwanted Emission Inside the Sub-Band (Traffic Carrier)
Plot 4B: Highest Channel Unwanted Emission Inside the Sub-Band (Traffic Carrier)
Plot 4C: Lowest Channel Unwanted Emission Inside the Sub-Band (Dummy Carrier)
Plot 4D: Highest Channel Unwanted Emission Inside the Sub-Band (Dummy Carrier)

The plots of the unwanted emission inside the sub-band are saved as filename: inband.pdf

4.9 Emissions Outside the Sub-Band, FCC Rule 15.323(d):

Emissions outside the sub-band shall be attenuated below a reference power of 112 mW (20.5 dBm) as follows:

1. 30 dB between the band edge and 1.25 MHz above or below the band;
2. 50 dB between 1.25 and 2.5 MHz above or below the band; and
3. 60 dB at 2.5 MHz or greater above or below the band, or shall meet the requirement of FCC Rule 15.319(g) which shall not exceed the limits of FCC Rule 15.209.

Example: Calculation of Limit for emissions between the band edge and 1.25 MHz (1920.000 – 1918.750 MHz)

The emissions shall not exceed the Limit: 20.5 dBm – 30 dB = -9.5 dBm

Measurements are made in accordance with ANSI C63.17 sub-clause 6.1.6.2. As EUT has non-detachable antenna(s), radiated emissions test method is used for out-of-band emissions tests. Emissions that are directly caused by digital circuits in the transmit path and transmitter portion are measured. Test setup and procedures are described in section 3.2 Figure 3.2.1.

Test Results:

Channel	Carrier Frequency (MHz)	Measured Band (MHz)	Limit (dBm)	Results
Lowest	1921.536	1920.000 - 1918.750	-9.5	Pass
		1918.750 - 1917.500	-29.5	Pass
		0.009 - 1917.500 & 1932.500 - 19300.000	FCC Rule 15.209	Pass
Highest	1928.448	1930.000 - 1931.250	-9.5	Pass
		1931.250 - 1932.500	-29.5	Pass
		0.009 - 1917.500 & 1932.500 - 19300.000	FCC Rule 15.209	Pass

Please refer to the section 4.9.1 to 4.9.4 for more details.

4.9.1 Field Strength Calculation

The field strength is calculated by adding the reading on the Spectrum Analyzer to the factors associated with preamplifiers (if any), antennas, cables, pulse desensitization and average factors (when specified limit is in average and measurements are made with peak detectors). A sample calculation is included below.

FS = RA + AF + CF - AG + PD + AV

Where FS = Field Strength in dBμV/m
RA = Receiver Amplitude (including preamplifier) in dBμV
CF = Cable Attenuation Factor in dB
AF = Antenna Factor in dB
AG = Amplifier Gain in dB
PD = Pulse Desensitization in dB
AV = Average Factor in -dB

In the radiated emission table which follows, the reading shown on the data table may reflect the preamplifier gain. An example of the calculations, where the reading does not reflect the preamplifier gain, follows:

FS = RA + AF + CF - AG + PD + AV

Example
Assume a receiver reading of 62.0 dBμV is obtained. The antenna factor of 7.4 dB and cable factor of 1.6 dB is added. The amplifier gain of 29.0 dB is subtracted. The pulse desensitization factor of the spectrum analyzer is 0.0 dB, and the resultant average factor is -10.0 dB. The net field strength for comparison to the appropriate emission limit is 32.0 dBμV/m. This value in dBμV/m is converted to its corresponding level in μV/m.

RA = 62.0 dBμV
AF = 7.4 dB
CF = 1.6 dB
AG = 29.0 dB
PD = 0.0 dB
AV = -10 dB

FS = 62.0 + 7.4 + 1.6 – 29.0 + 0.0 + (-10.0) = 32.0 dBμV/m

Level in mV/m = Common Antilogarithm [(32.0 dBμV/m)/20] = 39.8 μV/m

4.9.2 Average Factor Calculation and Transmitter ON Time Measurements, FCC Rule 15.35(b, c)

The EUT antenna output port was connected to the input of the spectrum analyzer. The analyzer center frequency was set to EUT RF channel carrier. The SPAN function on the analyzer was set to ZERO. The transmitter ON time was determined from the resultant time-amplitude display:

For 4 handsets operation with dummy operation:

Average Factor (AF) = Total Transmitter ON time in 10ms / 10ms
= [(0.414 x 4) ms + 0.128 ms] / 10 ms
= 0.1784 ms

Average Factor (AF) in dB = 20 $\log_{10}$ (AF) dB
= 20 $\log_{10}$ (0.1784) dB
= -15.0 dB

[×] Please refer to the attached plots for more details:
Plot 5A: Transmitter ON Time Measurements (Traffic Carrier)
Plot 5B: Transmitter ON Time Measurements (Dummy Carrier)

The plots of Transmitter ON Time Measurements are saved as filename: txon.pdf

[ ] Please refer to the attached transmitter timing diagram that are provided by manufacturer

[ ] Not applicable - No average factor is required.

4.9.3 Radiated Emissions Configuration Photographs:

Worst Case Radiated Emission
at

41.475 MHz

The worst case radiated emission configuration photographs are saved as filename: config photos.doc

Company: Sound Merchandising DBA IntelliTouch Communications™
Model: SBC-6028-2HC Date of Test: September 25-27, 2006
Mode: Transmission

4.9.4 Radiated Emissions Data:

Data are included of the worst case configuration (the configuration which resulted in the highest emission levels). A sample calculation, configuration photographs and data tables of the emissions are included. All measurements were performed with peak detection unless otherwise specified.

The data in tables 1, 2, 3, 4, and 5 list the significant emission frequencies, the limit and the margin of compliance.

Judgement: Passed by 7.8 dB margin compare with the quasi-peak limit

TEST ENGINEER:

Signature

Felix Ng, Lead Engineer
Typed/Printed Name

October 26, 2006
Date

Company: Sound Merchandising DBA IntelliTouch Communications™
Model: SBC-6028-2HC Date of Test: September 25-27, 2006
Mode: Transmission

Table 1

Radiated Emissions Data
Pursuant To FCC Part 15 Section 15.323 (d) Emissions Requirements

Lowest Channel:

Polari -zation	Frequency (MHz)	Emission Level at 3m (dBm)	Limit (dBm)	Margin (dB)
V	1919.850	-37.3	-9.5	-27.8
V	1918.003	-46.1	-29.5	-16.6
V	1917.004	-51.6	-39.5	-12.1

NOTES:

1. Peak detector is used for the emission measurement.

2. All measurements were made at 3 meters. Emissions not detected at the 3-meter distance were measured at 0.3-meter and an inverse proportional extrapolation was performed to compare the signal level to the 3-meter limit. No other emissions than those reported were detected at a test distance of 0.3-meter.

3. Negative value in the margin column shows emission below limit.

4. In the band at 2.5 MHz or greater above or below the band,

   [ ] Emissions are below the limit -39.5 dBm.

   [×] Emissions meet the requirement of FCC Rule 15.319(g), and are below the limits of FCC Rule 15.209. The emissions data are included in tables 2.

Company: Sound Merchandising DBA IntelliTouch Communications™
Model: SBC-6028-2HC Date of Test: September 25-27, 2006
Mode: Transmission

Table 2

Radiated Emissions Data
Pursuant To FCC Part 15 Section 15.209 Emissions Requirements

Lowest Channel:

Polari-zation	Frequency (MHz)	Reading (dBμV)	Pre-Amp Gain (dB)	Antenna Factor (dB)	Net at 3m - Peak (dBμV/m)	Average Factor (-dB)	Calculated at 3m (dBμV/m)	Limit at 3m (dBμV/m)	Margin (dB)
H	*3843.100	48.7	33	33.3	49.0	15.0	34.0	54.0	-20.0
H	5764.650	54.8	33	36.6	58.4	15.0	43.4	54.0	-10.6
V	*7686.200	53.5	33	38.9	59.4	15.0	44.4	54.0	-9.6
V	9607.750	46.4	36	40.4	50.8	15.0	35.8	54.0	-18.2

NOTES:

1. Peak detector is used for the emission measurement over 1000 MHz.

2. Analyzer RBW is 100 kHz or greater for frequencies below 1000 MHz. The RBW is 1 MHz or greater for frequencies above 1000 MHz.

3. All measurements were made at 3 meters. Emissions not detected at the 3-meter distance were measured at 0.3-meter and an inverse proportional extrapolation was performed to compare the signal level to the 3-meter limit. No other emissions than those reported were detected at a test distance of 0.3-meter.

4. The corresponding limit as per 15.209 is based on quasi-peak limit for frequencies below 1000 MHz and average limit for frequencies over 1000 MHz. The radio frequency emissions above 1000 MHz also meet corresponding 20 dB permitted peak limit with a peak detector function.

5. Negative value in the margin column shows emission below limit.

6. * Emission within the restricted band meets the requirement of part 15.205.

Company: Sound Merchandising DBA IntelliTouch Communications™
Model: SBC-6028-2HC Date of Test: September 25-27, 2006
Mode: Transmission

Table 3

Radiated Emissions Data
Pursuant To FCC Part 15 Section 15.323 (d) Emissions Requirements

Highest Channel:

Polari -zation	Frequency (MHz)	Emission Level at 3m (dBm)	Limit (dBm)	Margin (dB)
V	1930.740	-39.1	-9.5	-29.6
V	1931.305	-41.9	-29.5	-12.4
V	1932.700	-47.4	-39.5	-7.9

NOTES:

1. Peak detector is used for the emission measurement.

2. All measurements were made at 3 meters. Emissions not detected at the 3-meter distance were measured at 0.3-meter and an inverse proportional extrapolation was performed to compare the signal level to the 3-meter limit. No other emissions than those reported were detected at a test distance of 0.3-meter.

3. Negative value in the margin column shows emission below limit.

4. In the band at 2.5 MHz or greater above or below the band,

   [ ] Emissions are below the limit -39.5 dBm.

   [×] Emissions meet the requirement of FCC Rule 15.319(g), and are below the limits of FCC Rule 15.209. The emissions data are included in tables 4.

Company: Sound Merchandising DBA IntelliTouch Communications™
Model: SBC-6028-2HC Date of Test: September 25-27, 2006
Mode: Transmission

Table 4

Radiated Emissions Data
Pursuant To FCC Part 15 Section 15.209 Emissions Requirements

Highest Channel:

Polari-zation	Frequency (MHz)	Reading (dBμV)	Pre-Amp Gain (dB)	Antenna Factor (dB)	Net at 3m - Peak (dBμV/m)	Average Factor (-dB)	Calculated at 3m (dBμV/m)	Limit at 3m (dBμV/m)	Margin (dB)
H	*3856.880	48.7	33	33.3	49.0	15.0	34.0	54.0	-20.0
H	5785.320	54.7	33	36.6	58.3	15.0	43.3	54.0	-10.7
V	*7713.760	53.1	33	38.9	59.0	15.0	44.0	54.0	-10.0
V	9642.200	47.2	36	40.4	51.6	15.0	36.6	54.0	-17.4

NOTES:

1. Peak detector is used for the emission measurement over 1000 MHz.

2. Analyzer RBW is 100 kHz or greater for frequencies below 1000 MHz. The RBW is 1 MHz or greater for frequencies above 1000 MHz.

3. All measurements were made at 3 meters. Emissions not detected at the 3-meter distance were measured at 0.3-meter and an inverse proportional extrapolation was performed to compare the signal level to the 3-meter limit. No other emissions than those reported were detected at a test distance of 0.3-meter.

4. The corresponding limit as per 15.209 is based on quasi-peak limit for frequencies below 1000 MHz and average limit for frequencies over 1000 MHz. The radio frequency emissions above 1000 MHz also meet corresponding 20 dB permitted peak limit with a peak detector function.

5. Negative value in the margin column shows emission below limit.

6. * Emission within the restricted band meets the requirement of part 15.205.

Company: Sound Merchandising DBA IntelliTouch Communications™
Model: SBC-6028-2HC Date of Test: September 25-27, 2006
Mode: Talk

Table 5

Radiated Emissions Data
Pursuant To FCC Part 15 Section 15.209 Emissions Requirements

Polarization	Frequency (MHz)	Reading (dBµV)	Pre-Amp (dB)	Antenna Factor (dB)	Net at 3m (dBµV/m)	Limit at 3m (dBµV/m)	Margin (dB)
V	41.475	38.2	16	10.0	32.2	40.0	-7.8
V	55.299	36.0	16	11.0	31.0	40.0	-9.0
V	69.123	39.8	16	7.0	30.8	40.0	-9.2
H	82.947	39.0	16	7.0	30.0	40.0	-10.0
H	*124.419	35.1	16	14.0	33.1	43.5	-10.4
H	*165.891	31.0	16	17.0	32.0	43.5	-11.5
H	221.187	29.5	16	17.0	30.5	46.0	-15.5

NOTES:

1. Peak detector is used for the emission measurement over 1000 MHz.

2. Analyzer RBW is 100 kHz or greater for frequencies below 1000 MHz. The RBW is 1 MHz or greater for frequencies above 1000 MHz.

3. All measurements were made at 3 meters. Emissions not detected at the 3-meter distance were measured at 0.3-meter and an inverse proportional extrapolation was performed to compare the signal level to the 3-meter limit. No other emissions than those reported were detected at a test distance of 0.3-meter.

4. The corresponding limit as per 15.209 is based on quasi-peak limit for frequencies below 1000 MHz and average limit for frequencies over 1000 MHz. The radio frequency emissions above 1000 MHz also meet corresponding 20 dB permitted peak limit with a peak detector function, and this is the worst-case of 7.8 dB margin at 41.475 MHz.

5. Negative value in the margin column shows emission below limit.

6. * Emission within the restricted band meets the requirement of part 15.205.

4.10 AC Power Lines Conducted Emissions from Transmitter portion of EUT, FCC Rule 15.315:

The AC power lines conducted emission shall not exceed the limits of FCC Rule 17.207.

Measurements are made in accordance with ANSI C63.4 sub-clause 7. Emissions that are directly caused by digital circuits in the transmit path and transmitter portion are measured.

[ ] Not applicable – EUT is only powered by battery for operation.

[×] EUT connects to AC power lines. Emission Data are listed in following pages. Please refer to the section 4.10.1 to 4.10.2 for more details.

4.10.1 AC Power Lines Conducted Emissions Configuration Photographs:

Worst Case AC Power Line Conducted Emission

The worst case AC power Line conducted emission configuration photographs are saved as filename: config photos.doc

Company: Sound Merchandising DBA IntelliTouch Communications™
Model: SBC-6028-2HC Date of Test: September 25-27, 2006
Mode: Talk

4.10.2 AC Power Line Conducted Emissions Data:

The data on the following pages list the significant emission frequencies, the limit, and the margin of compliance.

Judgment: Passed by more than 20 dB margin

The worst case AC power line conducted emission data are saved as filename: conduct.pdf

TEST ENGINEER:

Signature

Felix Ng, Lead Engineer
Typed/Printed Name

October 26, 2006
Date

4.11 Radiated Emissions from Computing Device Peripheral Portion of EUT, FCC Rule 15.109(a):

EUT includes computing device peripheral circuitry and is subject to the requirements of FCC Part 15 Subpart B. The radiated emission shall not exceed the limits of FCC Rule 15.109(a).

Measurements are made in accordance with ANSI C63.4 sub-clause 8 and section 3.1. Radiated emissions shall be measured with EUT operating in typical operation modes. The spectrum analyzer resolution bandwidth was 100 kHz or greater for frequencies below 1000 MHz.

[×] Not applicable – No computing device peripheral

[ ] The computing device peripheral portion of EUT is subject to FCC Part 15 Subpart B, Certification. Please refer to the section 4.11.1 for more details.

[ ] The computing device peripheral portion of EUT is subject to FCC Part 15 Subpart B, DoC. Emission Data are included in the separated DoC report.

4.12 AC Power Lines Conducted Emissions from Computing Device Peripheral Portion of EUT, FCC Rule 15.107(a):

EUT includes computing device peripheral and is subject to the requirements of FCC Part 15 Subpart B. The AC power lines conducted emission shall not exceed the limits of FCC Rule 15.107(a).

Measurements are made in accordance with ANSI C63.4 sub-clause 7. Conducted emissions shall be measured with EUT operating in typical operation modes.

[×] Not applicable – No computing device peripheral

[ ] The computing device peripheral portion of EUT is subject to FCC Part 15 Subpart B, Certification. Please refer to the section 4.11.1 for more details.

[ ] The computing device peripheral portion of EUT is subject to FCC Part 15 Subpart B, DoC. Emission Data are included in the separated DoC report.

4.13 Radio Frequency Radiation Exposure, FCC Rule 15.319(i):

EUT is subject to the radio frequency exposure requirements specified in FCC Rule §§ 1.1307(b), 2.1091 and 2.1093. It shall be considered to operate in a “general population / uncontrolled” environment.

[ ] EUT was evaluated for Specific Absorption Rate (SAR) evaluation compliance according to OET Bulletin 65, Supplement C (Edition 01-01). It is in compliance with the SAR evaluation requirements. The caution statement is saved as filename: RF exposure info.pdf. A SAR test report was submitted at same time.

[×] EUT was evaluated for Maximum Permissible Exposure (MPE) evaluation compliance according to OET Bulletin 65, Supplement C (Edition 01-01). The evaluation calculation results are saved as filename: RF exposure info.pdf.

4.14 Frame Repetition Stability, FCC Rule 15.323(e):

[ ] EUT implements Time Division Duplex (TDD) in order to support duplex connection on a given frequency carrier shall maintain a frame repetition rate whereby 3 X the standard deviation of the frequency stability shall not exceed 50 ppm, not including a shift of the mean.

[×] EUT uses Time Division Multiple Access (TDMA) in order to support multiple communication links on a given frequency carrier shall maintain a frame repetition rate whereby 3 X standard deviation of the frequency stability shall not exceed 10 ppm, not including a shift of the mean.

Measurements are made in accordance with ANSI C63.17 sub-clause 6.2.2. Test setup is shown in section 3.2 Figure 3.2.1. A spectrum analyzer measures the time duration between rising edges of two consecutive frames over a time period of at least 1000 frame periods. These measurement values are used to compute the 3 X standard deviation of the frequency stability.

Test Results:

Maximum Frame Repetition Stability (ppm)	Limit (ppm)	Results
0.10	10	Pass

4.15 Frame Period and Jitter, FCC Rule 15.323(e):

The frame period (a set of consecutive time slots in which the position of each time slot can be identified by reference to a synchronizing source) of EUT operating in these sub-bands shall be 20 ms or 10 ms/X where X is a positive whole number.

The jitter (time-related, abrupt, spurious variations in the duration of the frame interval) introduced at the two ends of such a communication link shall not exceed 25 μs for any two consecutive transmissions. Transmissions shall be continuous in every time and spectrum window during the frame period defined for EUT.

Measurements are made in accordance with ANSI C63.17 sub-clause 6.2.3. Test setup is shown in section 3.2 Figure 3.2.1. A spectrum analyzer measures the time duration between the rising edges of two consecutive frames. The measurements are taken over 100,000 frames. These measurement values are used to compute mean value and the difference between any two consecutive frame periods. The mean value is the frame period.

Test Results:

I. Jitter

Measured Maximum Jitter (μs)	Limit (μs)	Results
-0.16	±25	Pass

4.16 Carrier Frequency Stability, FCC Rule 15.323(f):

The carrier frequency stability of EUT shall be maintained within +/-10 ppm at the following conditions:

1. Over 1 hour at nominal supply voltage and a temperature of +20 °C;
2. Over a variation in the primary supply voltage of 85 % to 115 % of nominal supply voltage at a temperature of +20 °C. This test does not apply to an EUT that is only powered by battery for operation;
3. Over a temperature variation of -20 °C to +50 °C or at extreme temperatures as declared by manufacturer, and at nominal supply voltage.

The nominal supply voltage: 120 VAC and the extreme temperatures of -20°C to +50°C are declared by manufacturer.

Measurements are made in accordance with ANSI C63.17 sub-clause 6.2.1 The EUT and CMD60 is connected with shielded coaxial cable. The EUT is controlled by DECT Radio Communication Tester, CMD60, to use a fixed frequency channel during test as well as record the frequency offset. The transmission of EUT is in burst mode with pseudo-random data. Test setup is shown as follows.

Test Results:

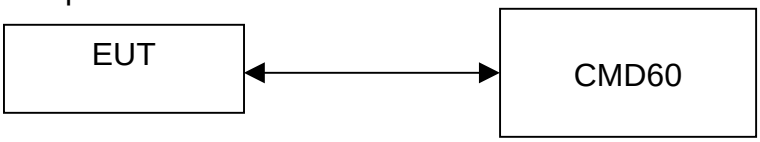

I. Carrier Frequency Stability over time

Supply Voltage	Temperature (^oC)	Measured Frequency Offset Over an hour (ppm)		Limit (ppm)	Results
		Max.	Min.		
Nominal	+20°C	1.04	-1.03	±10	Pass

II. Carrier Frequency Stability over Power Supply Voltage

Supply Voltage	Temperature (^oC)	Measured Frequency Offset (ppm)	Limit (ppm)	Results
85%	+20°C	1.04	±10	Pass
115%	+20°C	-0.51	±10	Pass

III. Carrier Frequency Stability over Temperature

Supply Voltage	Temperature (^oC)	Measured Frequency Offset (ppm)	Limit (ppm)	Results
Nominal	-20°C	2.08	±10	Pass
Nominal	+50°C	-1.03	±10	Pass

NA - Not applicable

4.17 Monitoring Threshold:

Monitoring threshold can be relaxed according to FCC Rule 15.323(c)(9). EUT that has a power output lower than the maximum permitted under FCC Rule 15.319(c) may increase their monitoring detection threshold by one decibel for each one decibel that the transmitter power is below the maximum permitted.

Calculation of Monitoring Threshold Limit:

Monitoring Threshold (T) $\leq -174 + 10 \log_{10} B + M + P_{max} - P_{EUT}$ dBm
$\leq 15 \log_{10} B - 184 + M - P_{EUT}$ dBm

Where B = Measured Emission Bandwidth: 1.33 x10^6 Hz
M = 30 dB for Lower Monitoring Threshold (T_L), or
= 50 dB for Upper Monitoring Threshold (T_U)
P_{max} = $5 \log_{10} B - 10$ dBm
P_{EUT} = Measured Peak Transmit Power: 18.20 dBm

Calculated Monitoring Threshold Limits:

Lower Monitoring Threshold (T_L) in dBm	-80.3
Upper Monitoring Threshold (T_U) in dBm	-60.3

4.17.1 Lower Monitoring Threshold, FCC Rule 15.323(c)(2):

[×] Not applicable – EUT which supports at least of 40 duplex system access channels and implements Least Interfered Channel (LIC) algorithm is permitted to use an upper monitoring threshold. Please refer to the section 4.17.2 for more details.

[ ] The lower monitoring threshold must not be more than 30 dB above the thermal noise power for a bandwidth equivalent to the emission bandwidth used by EUT.

Measurements are made in accordance with ANSI C63.17 sub-clause 7.3.1(b). Test setup is shown in section 3.3 Figure 3.3.1. The test is performed on the carrier closest to center of the band. RF signal generators apply uniform CW interference on all EUT carriers each at level T_L + 10 dB. Then, the interference level is reduced uniformly on all carriers until the EUT can transmit. The interference level shall be lower than or equal to the threshold limit.

Test Results:

Measured Maximum Interference Level (dBm)	Adjusted Lower Monitoring Threshold Limit (dBm)	Results
NA	-80.3	NA

NA - Not applicable

4.17.2 Least Interfered Channel, LIC, FCC Rule 15.323(c)(5):

[ ] Not implemented – EUT met lower monitoring threshold requirements. Please refer to the section 4.17.1 for more details

[×] If access to spectrum is not available as determined by section 4.17.1 and a minimum of 40 duplex system access channels are defined for the EUT, the time and spectrum windows with the lowest power level below a monitoring threshold of 50 dB above the thermal noise power determined for the emission bandwidth may be accessed

Number of duplex channels per frequency channel = 12
Number of frequency channel = 5
Total Duplex Channels = 60

Hence, the time and spectrum windows below upper monitoring threshold may be accessed.

4.17.2.1 Upper Monitoring Threshold, FCC Rule 15.323(c)(5):

Measurements are made in accordance with ANSI C63.17 sub-clause 7.3.2(b). Test setup is shown in section 3.3 Figure 3.3.1. The test is performed on the carrier closest to center of the band. RF signal generators apply uniform CW interference on all EUT carriers each at level T_U + 10 dB. Then, the interference level is reduced uniformly on all carriers until the EUT can transmit. The interference level shall be lower than or equal to the threshold limit.

Test Results:

Measured Maximum Interference Level (dBm)	Upper Monitoring Threshold Limit (dBm)	Results
-68.3	-60.3	Pass

NA - Not applicable

4.17.2.2 Least Interfered Channel (LIC) Selection, FCC Rule 15.323(c)(5):

The criteria are specified in section 4.17.2. In addition, the power measurement resolution for this comparison must be accurate to within 6 dB.

Measurements are made in accordance with ANSI C63.17 sub-clause 7.3.3. Test setup is shown in section 3.3 Figure 3.3.1. RF signal generators apply uniform CW interference on all EUT carriers except two carriers (designated f_1 and f_2), each at level T_U. EUT can only transmit on these two carriers.

Test Descriptions and Results:

II. LIC Procedure

	Test Descriptions	EUT transmits on	Results
1	Apply interference on f_1 at level T_L + 7 dB. Apply interference on f_2 at level T_L. Initiate transmission. Verify transmission on f_2. Terminate transmission. Repeat 5 times.	f_2	Pass
2	Apply interference on f_1 at level T_L. Apply interference on f_2 at level T_L + 7 dB. Initiate transmission. Verify transmission on f_1. Terminate transmission. Repeat 5 times.	f_1	Pass
3	Apply interference on f_1 at level T_L + 1 dB. Apply interference on f_2 at level T_L - 6 dB. Initiate transmission. Verify transmission on f_2. Terminate transmission. Repeat 5 times.	f_2	Pass
4	Apply interference on f_1 at level T_L - 6 dB. Apply interference on f_2 at level T_L + 1 dB. Initiate transmission. Verify transmission on f_1. Terminate transmission. Repeat 5 times.	f_1	Pass

NA - Not applicable

4.17.2.3 Least Interfered Channel (LIC) Confirmation, FCC Rule 15.323(c)(5):

EUT utilizing the provision of FCC Rule 15.323(c)(5) must have monitored all access channels defined for its system within the last 10 s and must verify, within the 20 ms (40 ms for EUT designed to use a 20 ms frame period) immediately preceding actual channel access that the detected power of the selected time and spectrum windows is no higher than the previously detected value.

Measurements are made in accordance with ANSI C63.17 sub-clause 7.3.4. This test is performed in section 4.18.

Results:

The tests are reported in section 4.18.

4.17.2.4 Maximum Spectrum Occupancy, FCC Rule 15.323(c)(5):

No EUT or group of co-operating EUTs located within 1 meter of each other shall during any frame period occupy more than 6 MHz of aggregate bandwidth, or alternatively, more than one third of the time and spectrum windows defined by the EUT.

Attestation:

According to the technical description provided, the total number of the time and spectrum windows defined by the system is 5*12 = 60

During any frame period, the maximum number of time and spectrum windows occupied by the system will be 12, which is less than one third of the time and spectrum windows defined by the system.

4.18 Monitoring Time, FCC Rule 15.323(c)(1):

Immediately prior to initiating transmission, EUT must monitor the combined time and spectrum windows in which they intend to transmit for a period of at least 10 ms for EUT designed to use a 10 ms or shorter frame period, or at least 20 ms for EUT designed to use a 20 ms frame period.

Measurements are made in accordance with ANSI C63.17 sub-clause 7.3.4. Test setup is shown in section 3.3 Figure 3.3.1. RF signal generators apply uniform CW interference on all system carriers except two carriers (designated f_1 and f_2), each at level T_U. EUT can only transmit on these two carriers.

Test Descriptions and Results:

	Test Descriptions	EUT transmits on	Results
1	Apply interference on f_1 at level T_U, and no interference on f_2. Initiate transmission. Verify transmission on f_2. Then, terminate transmission.	f_2	Pass
2	Apply interference on f_2 at level T_U, and remove interference from f_1 immediately. Also immediately initiate transmission but is at least 20 ms after interference on f_2 is applied. Verify transmission on f_1.	f_1	Pass

4.19 Maximum Transmit Period, FCC Rule 15.323(c)(3):

If no signal above the threshold level is detected, transmission may commence and continue with the same emission bandwidth in the monitored time and spectrum windows without further monitoring. However, occupation of the same combined time and spectrum windows by a EUT or group of co-operating EUTs continuously over a period of time longer than 8 hours is not permitted without repeating the access criteria.

EUT establishes a communication channel with its companion device, which occupies the duplex pair combined time and spectrum windows. Reference RF signal generator synchronized with the sample and then generated a pulse as a time frame reference. The centre frequency of spectrum analyzer was set to the carrier frequency and the SPAN was set to ZERO. The spectrum analyzer was used to monitor the time (reference to the time signal) and spectrum of the communication channel. The occupied time or spectrum of the communication channel shall be changed over a period of time no longer than 8 hours. For a EUT with a frame period of 10/X ms, no more than 2,880,000 X frames should be transmitted without a break.

Test setup is shown as follows:

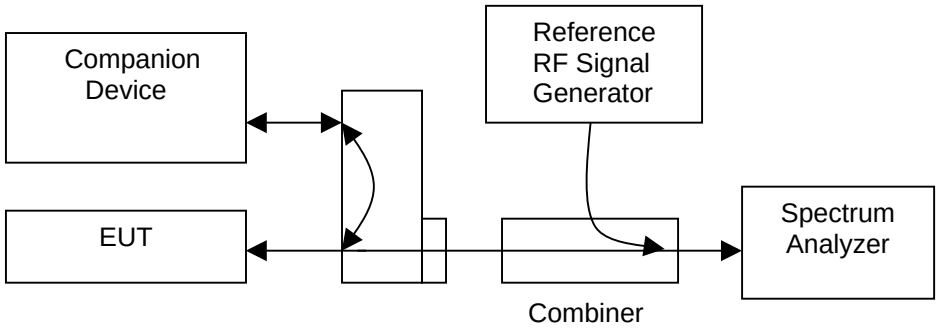

Test Results:

Measured Maximum Transmission Duration (seconds)	Limit (seconds)	Results
600	28,800	Pass

4.20 System Acknowledgement, FCC Rule 15.323(c)(4):

Once access to specific combined time and spectrum windows is obtained an acknowledgment from a system participant must be received by the initiating transmitter within one second or transmission must cease. Periodic acknowledgments must be received at least every 30 seconds or transmission must cease. Channels used exclusively for control and signaling information may transmit continuously for 30 seconds without receiving an acknowledgment, at which time the access criteria must be repeated.

Measurements are made in accordance with ANSI C63.17 sub-clause 8.1.1 and 8.2.1. Test setup is shown in section 3.3 Figure 3.3.1.

Test Results:

[×] Timing for EUTs using control and signaling channel type transmissions:

Conditions	Transmission Duration (seconds)	Limit (seconds)	Results
Time needed to repeat access criteria	1	30	Pass

[×] Timing for EUTs using communications channel type transmissions:

Conditions	Transmission Duration (seconds)	Limit (seconds)	Results
Activate EUT w/ companion device off	NA	1	NA
Time needed to cease Traffic Channel	5.5	30	Pass

NA - Not applicable

4.21 Random Waiting, FCC Rule 15.323(c)(6):

If the selected combined time and spectrum windows are unavailable, the EUT may either monitor and select different windows or seek to use the same windows after waiting an amount of time, randomly chosen from a uniform random distribution between 10 and 150 ms, commencing when the channel becomes available.

Measurements are made in accordance with ANSI C63.17 sub-clause 8.1.2 and 8.1.3. Test setup is shown in section 3.3 Figure 3.3.1.

Test Results:

[×] Random Waiting Interval is not implemented in the EUT:

Conditions	Transmit Channel	Results
Interference applied at operating Channel, f_1	f_2	Pass

[ ] Random waiting is implemented in the EUT:

Maximum time interval from the end of interference to the start of the control channel	The distribution of the measured time intervals	Results
NA	Uniform / Non-uniform	NA

NA - Not applicable

4.22 Monitoring Bandwidth, FCC Rule 15.323(c)(7).1:

The monitoring bandwidth must be equal to or greater than the emission bandwidth of the intended transmission.

Measurements are made in accordance with ANSI C63.17 sub-clause 7.4. Test setup is shown in section 3.3 Figure 3.3.1.

Test Results:

I. Simple Compliance Test Results:

Interference from Carrier	Reaction of EUT	Results
-30% EBW	NA	NA
+ 30% EBW	NA	NA

II. Detailed Compliance Test Results:

CW Interference from Carrier	Reaction of EUT	Results
+ 6 dB	B	Pass
+ 12 dB	B	Pass
- 6 dB	B	Pass
- 12 dB	B	Pass

A – Could Transmit
B – Could not Transmit
NA – Not applicable

*Remarks: Detailed Compliance Test was used to show the compliance of the EUT.

4.23 Maximum Reaction Time, FCC Rule 15.323(c)(7).2:

The monitoring system bandwidth must have a maximum reaction time less than 50 x SQRT (1.25/emission bandwidth *B* in MHz) μs for signals at the applicable threshold level but shall not be required to be less than 50 μs. If a signal is detected that is 6 dB or more above the applicable threshold level, the maximum reaction time shall be 35 x SQRT (1.25/emission bandwidth *B* in MHz) μs but shall not be required to be less than 35 μs.

Measurements are made in accordance with ANSI C63.17 sub-clause 7.5. Test setup is shown in section 3.3 Figure 3.3.1.

Test Results:

	Test	Reaction of EUT	Results
1	With Interference Pulse, 50μs	B	Pass
2	With Interference Pulse, 35μs	B	Pass

A – Could be connected in at least one channel

B – Could not be connected in all channels

NA – Not applicable

4.24 Monitoring Antenna, FCC Rule 15.323(c)(8):

The monitoring system shall use the same antenna used for transmission, or an antenna that yields equivalent reception at that location.

[×] EUT uses the same antenna used for transmission and monitoring that is in compliance meet above provision.

[ ] EUT uses difference antenna used for transmission and monitoring. It must be verified that the monitoring antenna provides coverage equivalent to that of the transmitting antenna. Measurements are made in accordance with ANSI C63.17 sub-clause 4.

4.25 Duplex Connections, FCC 15.323(c)(10):

An initiating device may attempt to establish a duplex connection by monitoring both its intended transmit (Tx) and receive (Rx) time and spectrum windows. If both the intended transmit and receive time and spectrum windows meet the access criteria, then the initiating device can initiate a transmission in the intended transmit time and spectrum window. If the power detected by the responding device can be decoded as a duplex connection signal from the initiating device, then the responding device may immediately begin transmitting on the receive time and spectrum window monitored by the initiating device.

Measurements are made in accordance with ANSI C63.17 sub-clause 8.3. Test setup is shown in section 3.3 Figure 3.3.1.

Attestation:

[×] Not applicable.

[ ] The EUT is the initiating device of the duplex connection

Test Results:

[ ] Dual Access Criteria Check for EUT not Implemented the Upper Threshold:

Interference	Reaction of EUT	Results
All Tx and Rx Window, except one for Rx Window	NA	NA
All Tx and Rx Window, except one for Tx Window	NA	NA

A – Could be connected on the target Rx window and its duplex mate
B – Could be connected on the target Tx window and its duplex mate
C – Could not be connected
NA – Not applicable

4.25 Duplex Connections, FCC 15.323(c)(10): continued

[ ] Dual Access Criteria Check for EUT Implemented the Upper Threshold:

Interference	Reaction of EUT	Results
All Tx windows with level T_L & Rx windows with level T_L+7dB, except one for Tx window & one for Rx window, which are not duplex.	NA	NA
All Tx windows with level T_L+7dB & Rx windows with level T_L, except one for Tx window & one for Rx, which are not duplex	NA	NA
All Tx & Rx windows with level T_U, except one for Tx window & one fro Rx Window, which are not duplex	NA	NA

A – Could be connected on the target Rx window and its duplex mate

B – Could be connected on the target Tx window and its duplex mate

C – Could not be connected

NA – Not applicable

4.26 Alternative Monitoring Interval for Co-located Device, FCC Rule 15.323(c)(11):

An initiating device that is prevented from monitoring during its intended transmit window due to monitoring system blocking from the transmissions of a co-located (within one meter) transmitter of the same system, may monitor the portions of the time and spectrum windows in which they intend to receive over a period of at least 10 ms. The monitored time and spectrum window must total at least 50 % of the 10 ms frame interval and the monitored spectrum must be within the 1.25 MHz frequency channel(s) already occupied by that device or co-located co-operating devices. If the access criteria is met for the intended receive time and spectrum window under the above conditions, then transmission in the intended transmit window by the initiating device may commence.

Measurements are made in accordance with ANSI C63.17 sub-clause 8.4.

Attestation:

[ ] Appropriate as it is Co-located Device, in which the monitoring system will be blocked from the transmissions of a co-located (Within one meter) transmitter of the same system. Please refer to attachment, 15.323(c)(11).pdf, for details.

[×] Not appropriate, as it is Cordless Telephone Application.

4.27 Fair Access, FCC Rule 15.323(c)(12):

The provisions of FCC Rule 15.323(c)(10) or (c)(11) shall not be used to extend the range of spectrum occupied over space or time for the purpose of denying fair access to spectrum to other devices.

Attestation:

The manufacturer declares that the device does not use any mechanisms as provided by Part 15.323(c)(10) or (c)(11) to extend the range of spectrum occupied over space or time for the purpose of denying fair access to spectrum to other devices.

The Declaration is saved as filename: fair access.pdf.

EXHIBIT 5
EQUIPMENT PHOTOGRAPHS

5.0 **Equipment Photographs**

The photographs are saved as filename: external photos.doc & internal photos.doc

EXHIBIT 6
PRODUCT LABELLING

6.0 **Product Labelling**

The FCC ID label artwork and its location are saved as filename: label.pdf

EXHIBIT 7
TECHNICAL SPECIFICATIONS

7.0 Technical Specifications

The block diagram and circuit diagram are saved as filename: block.pdf and circuit.pdf respectively.

EXHIBIT 8
INSTRUCTION MANUAL

8.0 **Instruction Manual**

A preliminary copy of the Instruction Manual is saved as filename: manual.pdf

The required FCC Information to the User is stated on P.44 of Instruction Manual.

This manual will be provided to the end-user with each unit sold/leased in the United States.

EXHIBIT 9
UTAM Affidavit

9.0 **UTAM Affidavit**

A copy of the UTAM affidavit is saved as filename: utam.pdf

EXHIBIT 10
CONFIDENTIALITY REQUEST

10.0 **Confidentiality Request**

A copy of the Confidentiality Request is saved as filename: request.pdf