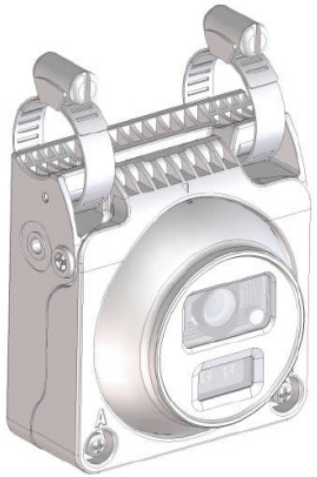

Aux Camera

Quick Start Guide

lytx

Model List:

	Wi Fi Model	Ethernet Model
Side Mount	DC-ACW-01	DC-ACE-01
Rear Mount	DC-ACW-02	DC-ACE-02

There are two versions of Aux Camera : WiFi Model & Ethernet Model.
The WiFi version does not support Ethernet connection and Ethernet version does not support WiFi connection.

1) The Aux Camera Module shall support Wi-Fi 802.11 b/g/n at a minimum for communication with the DriveCam/SurfSight devices.

* The wireless module complies with IEEE 802.11 b/g/n standard.
* It can achieve up to a speed of 72.2Mbps with single stream in 802.11n draft, 54Mbps as specified in IEEE 802.11g, or 11Mbps for IEEE 802.11b to connect to the wireless LAN.

1.1 Needed information for accessing to WiFi Model : DC-ACW-01 & DC-ACW-02

SSID (last 6 digit follow Mac address)	User name	Password
AuxCamera_ABCDEF	AuxCamera_ap	Aux.0123456789ab

1.2 Appearance Description and Device overview.

The overview of the aux camera is shown below:

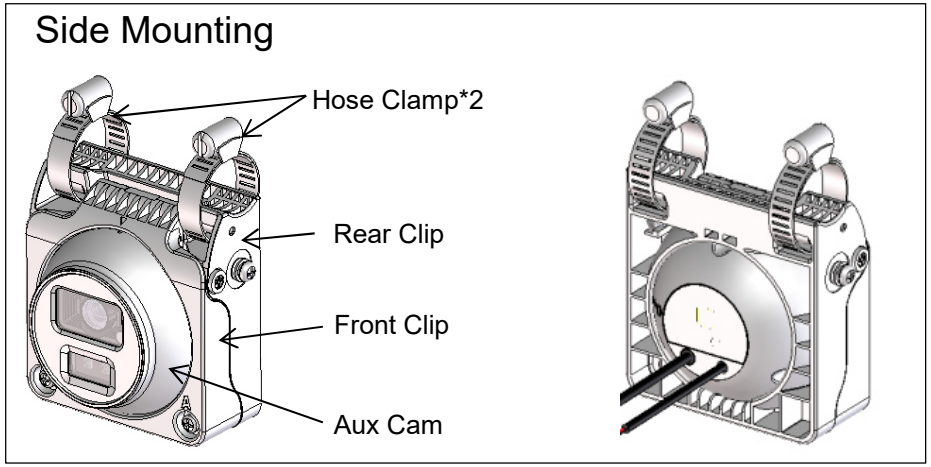

Rear Mounting

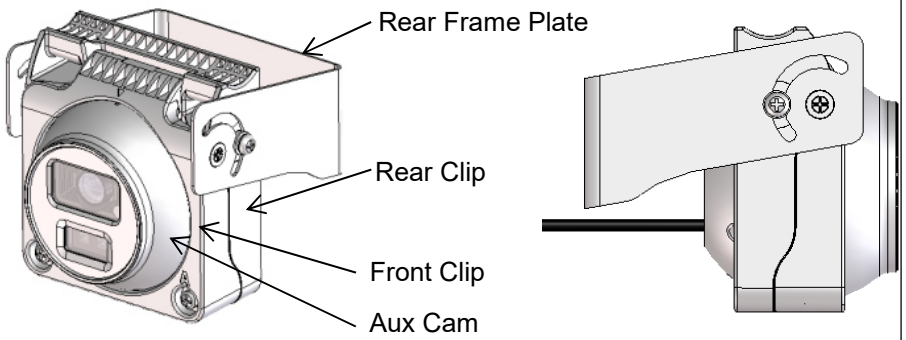

1.3 Cable Interface

M12 Ethernet D-Coded Cable for Video Signal

Pin 1: TxData+

Pin 2: RxData+

Pin 3: TxData-

Pin 4: RxData-

2 bare wire power cables

Red wire: Provides primary power and must be connected to a continuous power source.

Black wire: Functions as ground.

1.4 Required Tools

In addition to all guides and reference documents that you should read before beginning installation, the following tools are required for installation:

- Wire cutter
- Wire crimper
- Voltmeter or Multi-meter
- Cable ties
- Electric tape
- Vehicle manufacturer recommended tools
- Tape measure
- Phillips screwdriver
- Flat-blade screwdriver
- Marking pen

2. Installation

2.1 Note

The following materials are included in package.
Make sure the device in the package is in good condition and all the assembly parts are included.

2.2 Packing list

Packing List	WIFI Model		Ethernet Model	
	Side Camera	Rear Camera	Side Camera	Rear Camera
Camera	V	V	V	V
- DC Cable	10ft	10ft	6ft	6ft
- Ethernet Cable	-	-	6ft	6ft
Hose Clamp 1-1.5"	2pcs		2pcs	
Hose Clamp 4"	2pcs		2pcs	

2.3 Caution

Please do not lift a camera by its cable.

(NG)

Please do not open the cover.

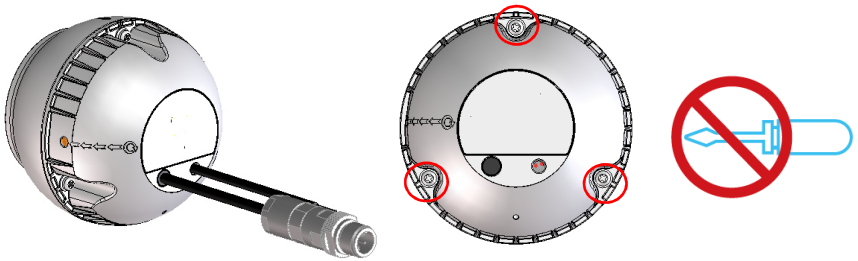

2.4 Mounting Location Recommendations

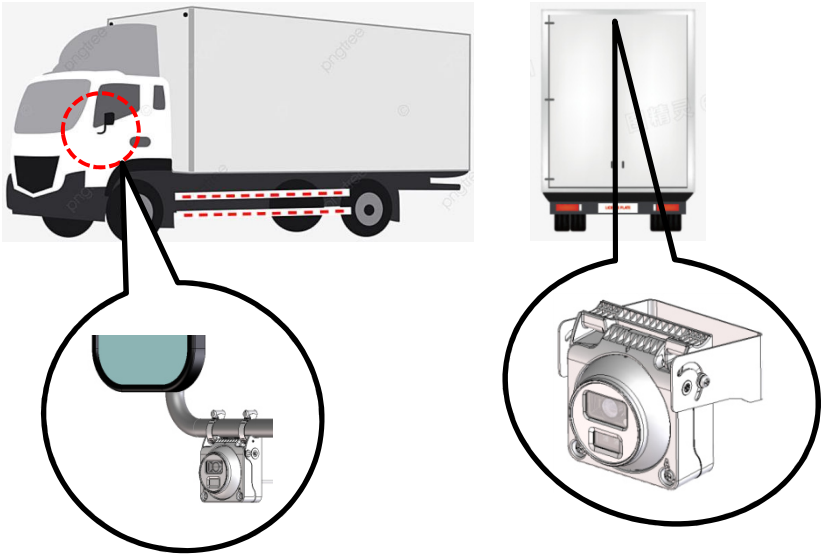

Side Mounting

Rear Mounting

2.5 Install Side Mounting

Screwdriver used in the metal hose clamp

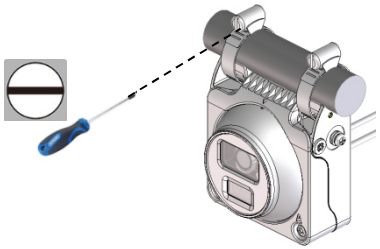

Angle Adjustment of side mounting.

How to adjust the Aux camera when user had been fixed into the bracket of back mirror?
First of all, using a Phillips screwdriver to release the Phillips screw A, Then user can adjust the angle, after done, meantime tightens the screws A.

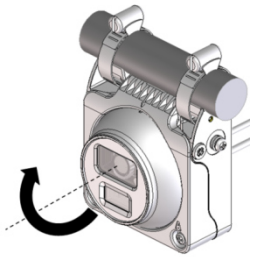

Rotate angle 360°

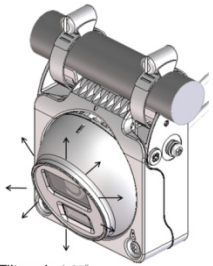

Tilt angle ± 20°
Pan angle ± 20°

2.6 Install Rear Mounting

First of all, Use a Phillips screwdriver to release the Phillips screw A of both side. And tilting the camera to -90° . Meantime user can see the hole of installation from top view. User can screw the screws B into the plate to fix entire camera, after done, user can adjust the angle for needing. Meantime tighten the screws A.

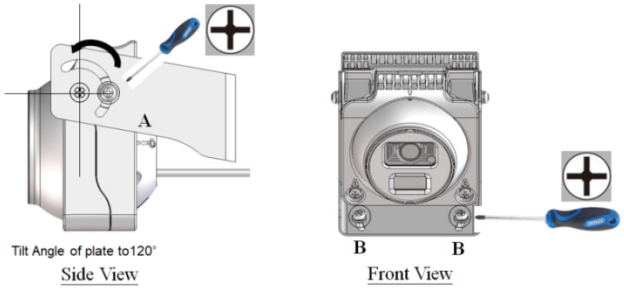

Angle Adjustment of rear mounting.

First of all, using a Phillips screwdriver to release the Phillips screw C, Then user can adjust the angle, after done, meantime tighten the screws C.

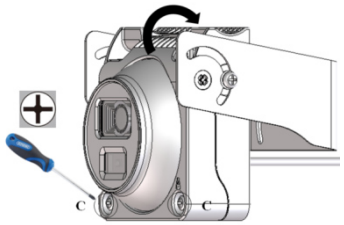

2.7 Cable connection

For Wi-Fi Model, power-only installations:

Red: Connect to 12V CONSTANT power source.
Black: Connect to clean CHASSIS GROUND.

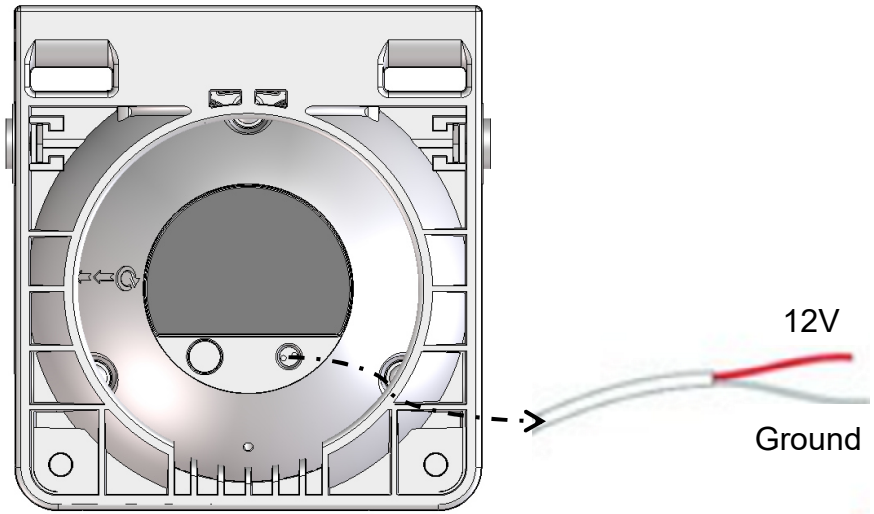

For Ethernet Model, Video cable installation

First of all, follow the power-cable installation to connect the power-cable.
Then, connect the video cable and checking the length of cable, If necessary, use the extension cable to add the cable for your need.
Mount the number O-ring for the waterproof connector onto the video cable port and install the remaining components of the waterproof connector in the sequence shown below. The waterproof connectors of the network cable must be secured tightly or they may come loose later.

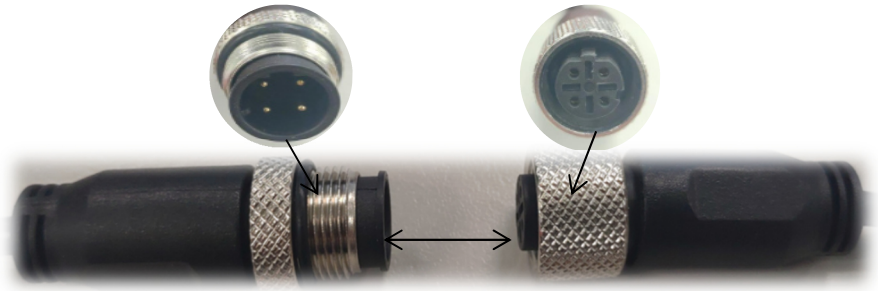

2.8 Cable waterproof and insulation

Please make sure the cable of all cannot be out of vehicle, and do not touch the rain or any water, If It cannot be prevent, please make sure get the waterproof as below shown.

Waterproof and insulate all cables including power cables, network cables, and unused pigtails.

1. Wrap one layer of insulation tape around each cable joint.
2. Stretch the waterproofing tape evenly to twice its original length. Then apply it for three layers from bottom to top, from top to bottom, and from bottom to top again.
3. Stretch the insulation tape evenly to twice its original length. Then apply it for three layers from bottom to top, from top to bottom, and from bottom to top again.to up. Finally tie the upper and lower ends with cable ties. Then use cable ties to secure the both ends.
4. Cover the rest of the cabling in a conduit or with protective waterproof rubber tape. Make a drip loop as shown below to create an artificial lowest point of the cable.

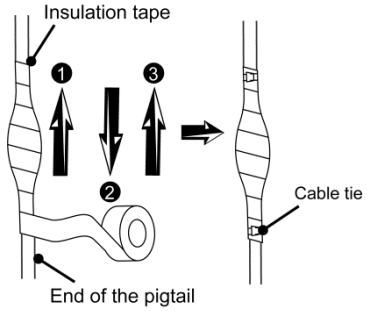

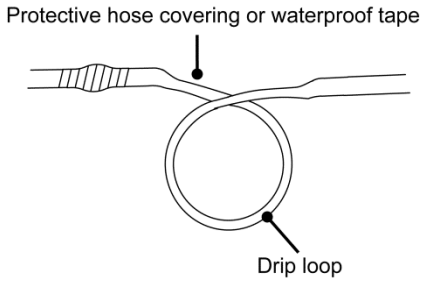

2.9 Reset Button

Use the Phillips screwdriver to remove the bottom cover of camera.

This button is hidden in the bracket. Normally, the user will not see the reset button.

When the user need to use this button.

First of all, open the bracket, then you can see the button.

Next, use a pencil or any pin to push the rubber button.

Triggered the reset button.

- hold the reset button over 10 sec , Aux cam will REBOOT & RESET all the setting.
- hold the reset button over 3 sec and release , Aux cam will ONLY REBOOT.

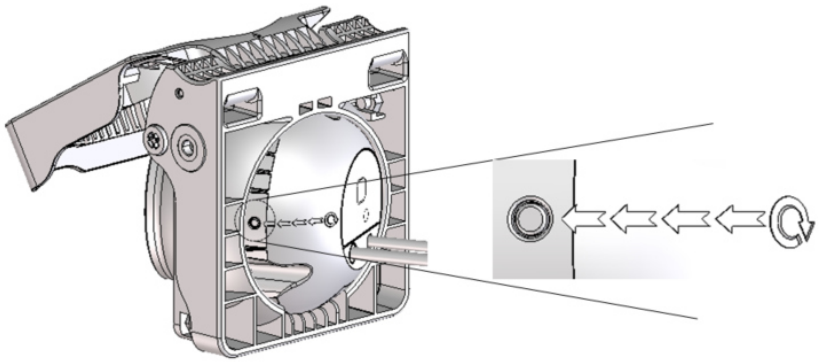

3. Check Item

Please confirm the following to ensure that the equipment is installed correctly.

Check Item	Result
All screw fully tightened	YES☐ NO ☐
The camera is securely installed to the mount or wall	YES☐ NO ☐
The ambient temperature meets the device specifications.	YES☐ NO ☐
Insulation and waterproofing measures have been taken to protect cables installed in humid environments, and the drip loops are in correct positions.	YES☐ NO ☐
The camera can power on normally.	YES☐ NO ☐

Declaration of toxic and hazardous substances in electronic and electrical products

設備名稱(Equipment name)：　　**型號（型式）**Type designation (Type)：

單元 Unit	限用物質及其化學符號 Restricted substances and its chemical symbols					
	鉛 Lead	汞 Mercury	鎘 Cadmium	六價鉻 Hexavalent chromium	多溴聯苯 Polybrominated biphenyls	多溴二苯醚 Polybrominated diphenyl ethers
	(Pb)	(Hg)	(Cd)	(Cr^{+6})	(PBB)	(PBDE)
PCBA	-	○	○	○	○	○
塑膠件	○	○	○	○	○	○
金屬件	○	○	○	○	○	○
Cable	○	○	○	○	○	○
電池	-	○	○	○	○	○

備考1.〝超出0.1 wt %〞及〝超出0.01 wt %〞係指限用物質之百分比含量超出百分比含量基準值。
Note 1: "Exceeding 0.1 wt %" and "exceeding 0.01 wt %" indicate that the percentage content of the restricted substance exceeds the reference percentage value of presence condition.

備考2.〝○〞係指該項限用物質之百分比含量未超出百分比含量基準值。
Note 2："○" indicates that the percentage content of the restricted substance does not exceed the percentage of reference value of presence.

備考3.〝-〞係指該項限用物質為排除項目。
Note 3：The "-" indicates that the restricted substance corresponds to the exemption.

FCC CAUTION

General caution (applicable to all products);

Class A: (Section 15.105)

FEDERAL COMMUNICATIONS COMMISSION INTERFERENCE STATEMENT

This equipment has been tested and found to comply with the limits for a Class A digital device, pursuant to part 15 of the FCC Rules. These limits are designed to provide reasonable protection against harmful interference when the equipment is operated in a commercial environment. This equipment generates, uses, and can radiate radio frequency energy and, if not installed and used in accordance with the instruction manual, may cause harmful interference to radio communications. Operation of this equipment in a residential area is likely to cause harmful interference in which case the user will be required to correct the interference at his own expense.

(Section 15.21)

CAUTION:

Any changes or modifications not expressly approved by the grantee of this device could void the user's authority to operate the equipment.

Labeling (Section 15.19)(a)(3)

This device complies with Part 15 of the FCC Rules. Operation is subject to the following two conditions: (1) this device may not cause harmful interference, and (2) this device must accept any interference received, including interference that may cause undesired operation.

RF exposure warning (FCC 2.1091 and FCC 2.1093)

This equipment must be installed and operated in accordance with provided instructions and the antenna(s) used for this transmitter must be installed to provide a separation distance of at least 20 cm from all persons and must not be co-located or operating in conjunction with any other antenna or

transmitter. End-users and installers must be provide with antenna installation instructions and transmitter operating conditions for satisfying RF exposure compliance.

RED

“Hereby, Lytx , declares that this IP Auxiliary Camera is in compliance with the essential requirements and other relevant provisions of Directive 2014/53/EU.”

URL : lytx.com/en-us/declaration-of-conformity

CE

Operating Frequency and Output Power

Function	Frequency	Maximum output power (EIRP)
WLAN	2412 – 2472 MHz	19.04dBm