DLoG MPC 6

Manual 1.01

This manual contains a detailed description of the product and we have made every effort to make it as accurate as possible. However, this is not a guarantee of the features or the functionality of the product.

We reserve the right to modify the contents of this document at any time and without prior notice.

Because we at DLoG are constantly striving to improve this product, we cannot guarantee that previous or subsequent releases of the product will correspond in every respect with the product description given in this manual.

DLoG GmbH assumes no liability for technical inaccuracies, typographic errors or faults in this documentation. DLoG GmbH also assumes no liability for damages caused directly or indirectly by the delivery, performance or usage of this material.

The software and hardware designations used in this documentation are in most cases also registered trademarks and are thus subject to law.

Windows® is a registered trademark of Microsoft Corporation in the United States (US) and other countries.

This documentation is protected by copyright. Duplication, in whole or in part, is not permitted without prior written approval of DLoG GmbH!

Title of documentation:	Manual DLoG MPC 6
Documentation completed on:	November 16, 2006
Version:	V1.01
Product number	885191E

© Copyright 2006

DLoG GmbH
Werner-von-Siemens-Strasse 13
D-82140 Olching, Germany

All rights reserved

Technical customer support

If you experience technical difficulties, please consult your distributor or contact the technical services department at DLoG's headquarters:

(+49) 8142/2860-0

KONFORMITÄTSERKLÄRUNG
DECLARATION OF CONFORMITY

gemäß den Bestimmungen der EG-Richtlinie über elektromagnetische Verträglichkeit 89/336/EWG geändert mit 91/263/EWG, 92/31/EWG, 93/68/EWG
und der EG-Richtlinie über Niederspannung 73/23/EWG geändert mit 93/68/EWG
sowie der RTTE EG-Richtlinie 1999/5/EG falls Datenübertragungsgeräte die im 2,4GHz Band arbeiten von DLoG installiert wurden
(in accordance with the EU-Directive of Electromagnetic-Compatibility 89/336/EWG changed by directive 91/263/EEC, 92/31/EEC, 93/68/EEC of the council and the EU-Directive for Low Voltage 73/23/EEC changed by directive 93/68/EEC of the council as well as the EU-Directive for radio equipment 1999/5/EC in case of data transmission equipment operating in the 2.4GHz band is assembled by DLoG)

Die Firma
(The Manufacturer)

DLoG
Gesellschaft für elektronische Datentechnik mbH
Werner-von-Siemens-Straße 13
D-82140 Olching
Germany

erklärt hiermit, daß das Produkt
(declares, that the product described in the following)

Geräteart: Industrie-PC
(Designation of device: industrial PC)
Gerätetyp: MPC 6
(Type of device: MPC 6)

mit den folgenden Normen oder normativen Dokumenten übereinstimmt:
(is conform to the following standards or normative documents:)

EMC-Störaussendung (EMC-Emission) / EMC-Störfestigkeit (EMC-Immunity):

EN 55022 : 1998 + A1:2000+A2:2003 Class B	Information technology equipment – radio disturbance characteristics – Limits and methods of measurement
EN 55024 : 1998 + A1:2001 + A2:2003	Information technology equipment – Immunity characteristics – Limits and methods of measurement
EN 61000-6-2 : 2001	Electromagnetic compatibility (EMC) – Immunity for industrial environment
EN 300 328 V1.6.1	Data transmission equipment operating in the 2.4Ghz ISM band and using spread spectrum modulation techniques
EN 301 489-17 V1.2.1	Specific conditions for 2.4GHz wideband transmission systems and 5GHz high performance RLAN equipment

Sicherheit (Safety):

EN 60950	2000	Safety of Information Technology Equipment, Including Electrical Business Equipment

Olching, 27.10.2006
Ort, Datum (Date)

DLOG Gesellschaft für elektronische Datentechnik mbH
Werner-von-Siemens-Str.13
D-82140 Olching bei München
Tel. 0 81 42 / 28 60 - 0 Fax 0 81 42 / 28 60 - 10

Unterschrift (Signature)

C:\Dokumente und Einstellungen\grimm.DLOG-SW2K\Lokale Einstellungen\Temporary Internet Files\OLK16\KonformErklMPC6_ClassB.doc

Table of contents

1. About this manual 1
   1.1. Device version described 1
   1.2. For qualified personnel 1
   1.3. Design method 2
      1.3.1. Warnings and notices 2
      1.3.2. Additional design elements 2
2. Important safety notices 4
   2.1. Initial operation of the device 4
   2.2. Power supply/external peripheral devices 6
   2.3. Repairs only through DLoG 7
   2.4. Opening and closing the device 8
   2.5. Exchanging and extending modules 10
   2.6. CE Marking 12
   2.7. RTTE Directive 1999/5/EC 12
      2.7.1. Special regulations in France 12
   2.8. FCC user information 13
      2.8.1. Interference declaration of the Federal Communications Commission 13
      2.8.2. Transmission of radio frequencies 14
3. Device description 15
   3.1. General 15
   3.2. Intended usage 16
   3.3. The models: DLoG MPC 6/110 and DLoG MPC 6/112 16
   3.4. Abbreviations used for devices and accessories 16
   3.5. Device description and type identification 17
      3.5.1. Device type plate 17
   3.6. Technical specifications 19
      3.6.1. Mechanical 19
      3.6.2. Motherboard 20

3.6.3. LCD/CRT interface 22
3.6.4. Touch screen (optional) 22
3.6.5. Network interface 23
3.6.6. ADC/MDC interface (optional) 23
3.6.7. Cardbus interface (optional) 23
3.6.8. PCI Express® MiniCard interface for WLAN (optional) 24
3.6.9. Power supply 25
3.6.10. Maximum power available for peripheral devices 26
3.6.11. Power supply fuses 27
3.6.12. Ambient conditions 28
3.6.13. Test marks 29
3.6.14. Dimensions 30
3.6.15. VESA drill holes 36

4. Unpacking the DLoG MPC 6 37

4.1. Scope of delivery 37

4.2. Packaging 37

4.3. Returning your device 37

5. Putting your DLoG MPC 6 in operation 38

5.1. Cooling through the supply of fresh air 38

5.2. Pin configuration 39

5.3. External connectors 39

5.3.1. AC voltage supply connector 41
5.3.2. DC voltage supply connector 41

5.4. Connecting external devices 43

5.4.1. Powering down the DLoG MPC 6 44

5.5. WLAN settings 45

5.5.1. Radio performance 45
5.5.2. DLoG antenna solutions for use in Germany 46

5.6. Removing the protective film from the display 46

5.7. Powering up the DLoG MPC 6 47

5.8. Protecting the TFT display from the memory effect 47

6. Accessories 48
6.1. Keyboard 48
6.1.1. SMALL keyboard 48
6.1.2. 24-key keypad 49
6.2. Mouse 50
6.3. External CD-ROM drive 51
6.4. External floppy disk drive 52
6.5. USB stick 53
6.6. Scanners 53
6.7. WLAN cards (PC card, cardbus, PCIe minicard) 53
7. Installation 54
7.1. Options for installing the device 54
7.2. Permitted mounting positions 55
7.3. Follow and retain the installation instructions 56
7.4. Mechanical dynamic loading 56
7.5. Power supply 57
7.5.1. AC power pack 57
7.5.2. DC power pack 58
7.5.3. Installing connecting cables 59
7.6. Vehicle applications (such as forklifts) 59
7.7. Cable cover (splash guard) 61
7.7.1. Protection class IP65 61
7.7.2. Protection class IP54 62
8. Operation 64
8.1. 4 key front panel 64
8.2. 10 key front panel 65
8.3. 25 key front panel 66
8.3.1. Power key 67
8.3.2. Manual brightness control/backlighting 68
8.3.3. LEDs 68
8.3.4. Function and number keys 69

8.3.5. Special keys 69
8.3.6. Escape key, enter key and scroll keys 70
8.4. Operating states 71

9. Operating system 72

9.1. Pre-installed on the hard drive/Compact Flash 72

9.2. Installing on the hard drive/Compact Flash 73

9.2.1. Operating systems supplied on CD-ROM 73
9.2.2. Operating system images 74
9.2.3. Operating systems on floppy disk 74

9.3. Special features of the operating systems 75

9.3.1. MS-DOS 75
9.3.2. Windows XP Embedded 75
9.3.3. Linux 75

10. Software applications 76

10.1. Displaying the configuration of the DLoG MPC 6 76

10.2. Fine tuning the operating system parameters 76

10.3. Environment controller settings 77

11. Serial ports 79

11.1. Resources 79

11.2. COM1 options 79

11.3. COM1 as a power supply 79

11.4. COM2 options 80

11.5. COM2 as electrically-isolated RS-422/485 80

11.6. Drivers 81

11.6.1. RS-232 operation 81
11.6.2. RS-4xx operation 81

11.7. Serial port printers 81

11.8. Serial port barcode scanners 82

11.8.1. Tips & tricks 83

12. Internal devices 84
12.1. Chipset 84
12.1.1. Installing chipset drivers under MS-DOS 84
12.1.2. Installing chipset drivers under Windows XP 84
12.2. VGA adapter 86
12.2.1. VGA driver installation under MS-DOS 86
12.2.2. VGA driver installation under Windows XP 86
12.3. Network adapter (10/100) 88
12.3.1. Network driver installation under MS-DOS 89
12.3.2. Network driver installation under Windows XP 89
12.4. Onboard sound adapter 91
12.4.1. Installation of the onboard sound adapter drivers (Win XP) 91
12.5. Touch screen 93
12.5.1. MS-DOS installation and calibration for driver version 5.06 94
12.6. Touch (Serial) for Windows XP Prof. and XP Embedded 96
12.6.1. Installation 96
12.6.2. Calibration 98
12.7. Touch (PS2) for Windows XP Prof. and XP Embedded 99
12.7.1. Installation 99
12.7.2. Calibration 100
12.8. Resistance of the touch screen 101
12.9. Plug-in cards 103
12.9.1. Riser card with 1x PCI 104
12.9.2. TerraTec 128i PCI sound card 104
12.9.3. CAN card 104
12.10. Automatic switch-off and heating 105
12.10.1. Automatic shutdown process 106
12.10.2. Program flowchart 107
12.10.3. Drivers 109
12.10.4. General notes about the automatic shutdown software in Windows 110

13. Maintenance 111
13.1. Cleaning the housing 111
13.2. Touch screen cleaning 111
14. Common mistakes in usage 112
14.1. Power supply 112
14.2. Powering up/down 112
14.3. Cable cover 112
14.4. Installation 113
14.5. Mobile application on vehicles 113
14.6. Using the touch screen 114
14.7. Use/storage in extreme temperatures 114
15. Disposal 115
16. Appendix A: System resources 116
16.1. Part 1 116
16.2. Part 2 118
17. Appendix B: Terminal assignment (Pins) 119
17.1. External connectors 119
17.1.1. Keyboard and Mouse 119
17.1.2. USB 120
17.1.3. Serial port COM1 120
17.1.4. Serial port COM2 121
17.1.5. Network connector 122
17.2. Internal connectors, motherboard MPC6.20 123
17.2.1. Cardbus connector 124
17.2.2. Input voltage connector 126
17.2.3. Ignition signal connector 126
17.2.4. Heating power connectors 127
17.2.5. Serial port COM2 127
17.2.6. Audio port 128
17.2.7. IDE connector 129

17.2.8. Compact Flash connector 130
17.2.9. LCD connector 131
17.2.10. Front keyboard connector 132
17.2.11. Inverter connector 132
17.2.12. Touch connector 133
17.2.13. Riser card connector 134
17.2.14. Internal connectors, riser card 135
17.2.15. PCI connector 136
17.2.16. VGA Interface (for service purposes only) 139
17.2.17. COM4 connection 140
17.2.18. USB post 3 and 4 141
17.2.19. PCIe MiniCard socket 142

18. Appendix C: Jumper 143

18.1. Warnings 143

18.2. Standard jumper settings 143

18.3. Jumper layout view, motherboard 144

18.3.1. Battery 145
18.3.2. Ethernet configuration 145
18.3.3. Compact Flash configuration 145
18.3.4. Touch enable 146
18.3.5. Touch configuration 146
18.3.6. COM1 configuration 147
18.3.7. LCD configuration 147
18.3.8. Compact Flash DMA configuration 148
18.3.9. Touch interface selection 148
18.3.10. External shield connection 148

19. Appendix D: Tools 149

19.1. Please follow the safety notices 149

19.2. DLoG MPC 6 toolkit 150

19.3. Mounting bracket toolkit 151

20. Appendix E: Mechanical dynamic loading 152
20.1. Introduction 152
20.2. Using the device without vibration insulation (tuned to a high frequency) 154
20.3. Use with passive vibration insulation (tuned to a low frequency) 155
20.4. Dimensioning example DLoG MPC 6/110 156
20.4.1. Approximate solution for the selection of elastomer springs 158
20.4.2. Further possible steps for optimization: 160
20.4.3. Approximate solution for determining insulating effects 161
20.5. Determining natural frequencies 163
21. Appendix F: BIOS 164
21.1. BIOS setup description 164
21.2. Entering the BIOS setup program 164
21.3. Setup menu and navigation 165
21.4. Main setup screen 166
21.5. Advanced setup 168
21.5.1. ACPI configuration submenu 169
21.5.2. PCI configuration submenu 170
21.5.3. Graphics configuration submenu 172
21.5.4. CPU configuration submenu 174
21.5.5. Chipset configuration submenu 174
21.5.6. I/O Interface configuration submenu 175
21.5.7. IDE configuration submenu 176
21.5.8. USB configuration submenu 180
21.5.9. Keyboard/mouse configuration submenu 182
21.5.10. Remote access configuration submenu 183
21.5.11. Hardware monitoring submenu 185
21.5.12. Watchdog configuration submenu 186
21.6. Boot setup 188
21.6.1. Boot device priority 189
21.6.2. Boot settings configuration 190
21.7. Security setup 191
21.7.1. Security Settings 192
21.7.2. Hard disk security 193

21.8. Exit menu 194
21.9. Additional BIOS features 195
21.9.1. Updating the BIOS 195
21.10. BIOS recovery 199
21.11. BIOS security features 199
21.12. Hard disk security features 200
22. Return packing slip 201
Index 202

List of figures

Figure 2.1: CE Marking 12
Figure 3.1: DLoG MPC 6 with optional mount 15
Figure 3.2: Example of a device type plate 18
Figure 3.3: DLoG MPC 6/110 SVGA front view 30
Figure 3.4: DLoG MPC 6/110 SVGA side view 31
Figure 3.5: DLoG MPC 6/110 SVGA top view 32
Figure 3.6: DLoG MPC 6/112 front view 33
Figure 3.7: DLoG MPC 6/112 side view 34
Figure 3.8: DLoG MPC 6/112 top view 35
Figure 3.9: DLoG MPC 6/110 with VESA drill holes 36
Figure 5.1: External connectors, AC version 39
Figure 5.2: External connectors, 24/48 VDC 60 W version 39
Figure 5.3: External connectors, 24/48 VDC 100 W version 40
Figure 5.4: External connectors, 12 VDC 100 W version 40
Figure 5.5: Exterior view of the AC power supply connector 41
Figure 5.6: Exterior view of the DC power supply connector 41
Figure 5.7: Cable diagrams of the DC device's supply connection 42
Figure 6.1: SMALL keyboard on the DLoG MPC 6 48
Figure 6.2: 24-key keypad on the DLoG MPC 6 49
Figure 7.1: Permitted mounting positions of the DLoG MPC 6 55
Figure 7.2: Position of the ground bolt 60
Figure 7.3: DLoG MPC 6 with strain relief 61
Figure 7.4: DLoG MPC 6 without cable cover 62
Figure 7.5: DLoG MPC 6 with cable cover mounted 63
Figure 8.1: DLoG MPC 6 front panel with 4 keys 64
Figure 8.2: DLoG MPC 6 front panel with 10 keys 65
Figure 8.3: DLoG MPC 6 front panel with 25 keys 66

Figure 12.1: Welcome screen for chipset driver installation 85
Figure 12.2: Welcome screen for the VGA driver installation 87
Figure 12.3: RJ45 network port 88
Figure 12.4: Network driver installation license agreement 89
Figure 12.5: Start screen for network driver installation 90
Figure 12.6: Welcome screen for the onboard sound adapter drivers 91
Figure 12.7: Warning message for the onboard sound adapter drivers 92
Figure 12.8: “Files Needed” touch installation dialog 97
Figure 12.9: “Setup Message” touch installation dialog 99
Figure 12.10: Automatic shutdown program flowchart part 1 107
Figure 12.11: Automatic shutdown program flowchart part 2 108
Figure 17.1: Internal connectors, riser card 1 x PCI 135
Figure 18.1: Jumper layout, motherboard MPC6.20 06.2006 144
Figure 19.1: DLoG MPC 6 toolkit 150
Figure 19.2: Mounting bracket toolkit 151
Figure 20.1: Table-top attachment with elastomer springs 157
Figure 21.1: BIOS advanced setup 168
Figure 21.2: BIOS security setup 191
Figure 21.3: BIOS exit menu 194
Figure 21.4: BIOS updating under Windows 1 197

1. About this manual

This manual has been designed to make using the DLoG MPC 6 as simple as possible and provide expert assistance if problems should occur. It contains important information on using the device safely, properly and efficiently.

Adhering to the manual helps by avoiding dangers, reducing repair costs and breakdown times and increasing the reliability and lifespan of the DLoG MPC 6.

DLoG GmbH will not assume responsibility for any damage caused by the improper use of the DLoG MPC 6 and/or in disregard of the instructions in this manual.

Within this manual, DLoG GmbH strives to provide all the information required for using your DLoG MPC 6. However, because this is a versatile product that can be used in many different scenarios, we cannot guarantee that the information contained in this manual will cover every single aspect.

Should you require further information or if you have questions or issues needing clarification, please contact your nearest DLoG agent or representative.

1.1. Device version described

This manual describes the DLoG MPC 6 with the motherboard version MPC6 20 06 2006.

1.2. For qualified personnel

This manual was written for qualified personnel. The information is intended exclusively to complement the expertise of qualified personnel , not to replace it.

1.3. Design method

1.3.1. Warnings and notices

Warnings and notices in this manual are indicated as follows:

This symbol indicates **general information** and **hints** that help you to understand how to use the product or the manual.

This symbol warns you of any dangers or hazards that could potentially cause **damage to the terminal or system** (such as malfunctions, data loss, equipment damage, etc.).

This symbol indicates **hazards that pose a risk to life and limb** (such as contacting the power supply).
You must heed this information!

1.3.2. Additional design elements

Lists are indicated with bullet points, for example:

- DC power packs
- AC power packs

Instructions are numbered, for example:

1. Insert a CD.
2. Press <A>.

Parameter descriptions (e.g., of a dialog)

Ignition off	This parameter is used to set,…
Delay time	This indicates the delay time.
Switch-off time	The switch-off time should be at least…

Key display

Key names are shown in angle brackets: <F1>, <Ctrl>, <Insert>, <Home>, etc.

Menu options, commands, dialog fields

Examples: In the **Edit** menu you will find the command **Paste | Values**.

Click **OK** to finish.

Entries

Any text that needs to be entered is shown in `Courier` font, for example:

1. Enter the text `abcdefg`.

Other methods for emphasis

Any other emphasized text elements are highlighted in **bold** or <u>underlined</u>.

References to other chapters in the manual are printed in *italics*.

2. Important safety notices

The DLoG MPC 6 was designed and built according to modern technology and accepted safety regulations. However, the operation of the DLoG MPC 6 can endanger personnel or third parties and cause damage to the device and other material assets when for example the device is

- operated by untrained or uninformed personnel.
- not operated correctly.
- operated and maintained incorrectly.

The operator commitments in regards to safety (accident prevention regulations, work protection) are to be followed.

2.1. Initial operation of the device

Area of application

The device is not designed for use in life-support systems or critical safety systems where system malfunction can lead to the direct or indirect endangerment of human life. The operator shall take full responsibility for using the device in these situations.

The device cannot be used in combination with safety functions for machines and equipment which have to conform to the requirements of EN 954-1.

Choice of location

The ambient conditions at the point of installation must comply with the device's protection class.

Installation/initial operation

The device is not supplied with a disconnector (switch) that can be accessed externally. The power supply connector is therefore used as a disconnector. Therefore it needs to be easily accessible. If it is necessary to establish a fixed connection, an easily accessible disconnecting device (e.g. a switch such as a circuit breaker) should be installed close to the device. Ensure that the power cable is laid so that it is mechanically protected.
The power supply cables must be laid in accordance with the applicable local installation regulations.

Radio performance

Do not exceed the maximum permissible transmitting power which is specified by each separate country. DLoG MPC 6 users must verify this themselves.

Risk of injury

The unit could fall during transit or installation and cause injury. Always ensure that there are two persons available when installing or removing the device.

Supply of fresh air

The DLoG MPC 6 is based on a passive cooling concept. As a result, the waste heat which is produced inside the device is emitted over the surface of the housing. For this system to function properly, sufficient fresh air circulation is required. Never install the system in a closed environment where the cooling air is unable to dissipate accumulated heat to the outside.

If the DLoG MPC 6 is not able to draw in fresh cooling air, this may cause overheating and severe damage to the unit.
The maximum allowed ambient temperature for the system needs to be taken into account for the concrete application area.

2.2. Power supply/external peripheral devices

Operation in an emergency

In case of emergency (such as damage to the power cable , or housing, or ingress of liquid or other foreign bodies), the device must be disconnected immediately from the power supply. Contact technical support staff at once.

Protection of the power supplies

If, after replacement, the fuse fed by the internal power supply blows again, the device must be sent in for servicing immediately (see section *3.6.11*).

Danger of electrocution when cleaning/servicing the device

In order to avoid electrocution always disconnect the DLoG MPC 6 from the power supply before cleaning or servicing the device.

When charging the car battery please note

While charging the car battery the DLoG MPC 6 has to be either disconnected from the battery or it has to be determined that the maximum allowed input voltage of the DLoG MPC 6 is not exceeded. (see sections *3.6.9* and *7.5*).

Wiring

Do not use the DLoG MPC 6 when a cable or plug is damaged. Have the damaged parts replaced immediately!

Do not connect or disconnect any cables during storms

Data cables must never be connected or disconnected during an electrical storm.

External peripheral devices

The use of additional wiring and other peripheral devices, which are not recommended or sold by the manufacturer can result in fire, electrocution or personal injury.

If a power supply is used, only use the power supply recommended by the manufacturer.

Before connecting or disconnecting peripheral devices (exception: USB devices), the DLoG MPC 6 must be disconnected from the power supply! Otherwise, this could seriously damage both the DLoG MPC 6 and the connected devices!

Make sure that external peripheral devices with their own power supply are switched on at the same time or after you start the DLoG MPC 6.
If this is not possible, please ensure that the DLoG MPC 6 is adequately protected from power leakage caused by an external device.

2.3. Repairs only through DLoG

As a rule, never carry out repairs on the device yourself. Always contact DLoG's technical support and send in your unit for repair if necessary.

On the back of the DLoG MPC 6 you will find the device's type plate which has important information about the device which you must quote for technical service. It provides important information about the configuration and manufacture of the device in abbreviated form.

Always provide technicians with the full model name and serial number.

2.4. Opening and closing the device

If you choose to open the DLoG MPC 6 at your own risk, please make sure you observe the safety instructions from the previous pages.

Persons authorized to open and close the device

The DLoG MPC 6 may only be opened for the purposes of adding or exchanging modules. Only qualified electrical or electronics engineers or persons trained by DLoG are authorized to do this.

Power supply

Prior to opening the device , make sure that the operating system has been properly shut down and that the unit is disconnected from the power supply. If the DLoG MPC 6 is equipped with an optional UPS battery, only open the device after the Power LED has gone out.

On opening and closing the device, pay attention to the following:

Note that the penetration of even extremely small metallic splinters or small amounts of moisture can put the DLoG MPC 6 out of service. Always open the device in a weather-protected environment that is as dust-free as possible..

The surface of the touch screen should always be kept free of dirt, dust, fingerprints and so on to ensure full visibility of the display. Protect the touch screen from scratches or any other damage, before placing the device face down.

If you open the device, disconnect the cable connections to the front of the display.

Before closing the device, please ensure that the cable connections to the front of the display have been replaced correctly.

Make sure the cables are not unduly stressed or bent.

When working on the device, only use the appropriate tools as listed in *Appendix D*.

You need a torque wrench, in order to correctly close the device.

Device seal

The face of the DLoG MPC 6 device has a protective seal glued into its frame. Do not attempt to remove the seal from the face, as this will cause irreversible damage to the seal and render it unusable.

Before closing the device, ensure the seal is seated properly between the face and the device housing – especially for devices compliant with protection class IP65.

Visually check the seal for defects (tears, cuts) and foreign bodies (dirt). If you can tell the seal is damaged, or if you think it may be damaged, contact DLoG's technical service.

Replacing the seal on IP65 devices

Never replace the glued-in seal on devices compliant with protection class IP65 yourself. This will instantly void all present and future guarantees and liability claims even during the agreed warranty period.

Closing the device

The front is attached to the base unit with hexagonal screws (M5 x 20 with an inside diameter of 3 mm). These screws must be retightened with a torque wrench in all devices.

Retighten all the hexagonal screws in a cross-wise pattern to the following torque:
DLoG MPC 6/110: 3 Nm
DLoG MPC 6/112: 4 Nm

Tighten both screws in the temporary cap and antenna cap with a torque wrench to a torque of 1 Nm.

Please be aware that any licenses or guarantees may lose their validity if the device has been improperly operated or opened/closed. For devices compliant with protection class IP65, DLoG can no longer guarantee the safety rating if the device has been, for example, improperly opened or closed by unqualified personnel.

2.5. Exchanging and extending modules

Carefully follow the instructions on opening and closing the device!

Replacement and extension by qualified personnel

The DLoG MPC 6 may only be opened for the purposes of adding or replacing modules. Only qualified electrical or electronics engineers or persons trained by DLoG are authorized to do this.

Fuse failure

If, after replacement, the fuse fed by the internal power supplies blows again, the device must be immediately sent in for servicing.

No battery changes

The DLoG MPC 6 motherboard is powered by a lithium ion battery which is fixed to the motherboard. This battery should not be replaced under any circumstances, as this requires soldering! Should a battery replacement be necessary, the device must be sent to DLoG. Changing the battery yourself will instantly void all present and future guarantee and liability claims.

Using an unsuitable battery type or incorrectly installing it may cause the battery to explode.

Extending modules

When extending or replacing modules, only use components approved by DLoG for use in the DLoG MPC 6. Each time before installing a component, please contact DLoG to ensure that the desired module can be replaced or installed.

When extending modules, proceed with utmost caution.
Any damage caused while installing or replacing modules will instantly void all present and future guarantee and liability claims.

Damage to the computer system

To avoid damage to the motherboard and/or other computer components, only install modules in the designated slots.

Never physically touch the motherboard or any electrical components in a non-ESD-protected area, as this may cause damage to the motherboard.

Before physically touching motherboards or electrical components, make sure that you are working within an ESD-protected area.

System overloads

To avoid system overloads, check the sum load of all components installed.

Make sure that the input current for each consumer falls within the appropriate boundaries (see: the technical data for each corresponding consumer).

2.6. CE Marking

This product and its authorized peripheral devices comply with all of the requirements for the CE marking for use at home or in commercial or light industrial applications.

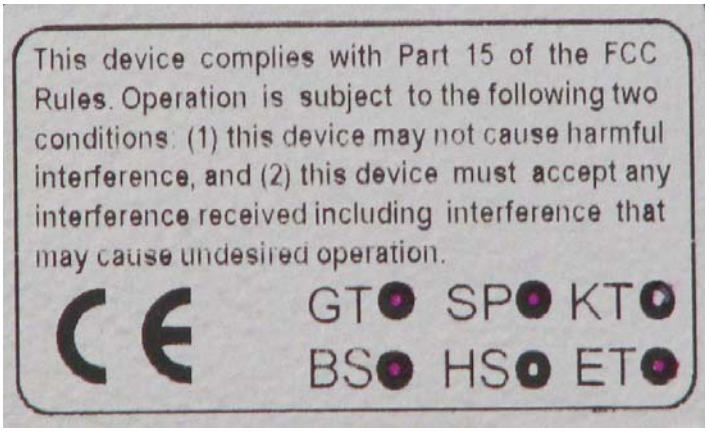

Figure 2.1: CE Marking

2.7. RTTE Directive 1999/5/EC

With regard to the RTTE Directive 1999/5/EC the statements in the declaration of conformity for the DLoG MPC 6 (see page 2 of this handbook) apply.

2.7.1. Special regulations in France

Due to restrictions imposed by the French government, the DLoG MPC 6 with WLAN 802.11b is only permitted for use indoors.

On private property the product is allowed to be used outdoors, however only with previous approval from France's Ministry of Defense.

2.8. FCC user information

2.8.1. Interference declaration of the Federal Communications Commission

This device was tested and conforms, according to section 15 of the FCC regulations, to the threshold values for Class B digital devices. These threshold values were determined in order to provide for reasonable protection against damaging interference when installed in living areas. This device generates, uses, and can radiate high frequency energy. If not installed and operated according to the manual, the device can cause disturbances in the reception of radio waves. There is no guarantee that certain installations will result in no disturbance.

If this device causes disturbance to radio or TV reception - which can be determined by turning the unit on and off – the user should eliminate the disturbance using the following measures:

- Readjust the receiving antenna or place it in a different location.
- Increase the distance between the unit and the receiver.
- Plug the unit into a different electrical circuit to the receiver.
- Contact your dealer or an experienced radio or TV technician.

This device complies with the provisions of section 15 of the FCC regulations. Operation is subject to the following two conditions: (1) This device must not cause harmful interference, and (2) this device must absorb any interference received including interference that may cause undesired operation.

FCC warning: Any change or modification which is not expressly approved in the corresponding pages can lead to the withdrawal of the operating license for this device.

In order to comply with the FCC requirements regarding radio frequency exposure from vehicle-mounted transmission devices the antenna has to be kept at least 20 cm away from people.

2.8.2. Transmission of radio frequencies

Use care in airplanes or in clinical/medical areas

Some devices in hospitals and airplanes are not protected from radio frequency energy. Consequently, do not use the DLoG MPC 6 in airplanes or hospitals without prior authorization. Here use of the DLoG MPC 6 is only permitted if authorization is obtained.

Caution with pacemakers

Do not use the DLoG MPC 6 near pacemakers.

The DLoG MPC 6 can affect the function of medically implanted devices such as pacemakers and create interference. Do not place the DLoG MPC 6 near such devices.

Keep a minimum distance of 20cm between such a device and the DLoG MPC 6 in order to reduce the risk of interference.

If you have reason to assume that interference has occurred, then turn the DLoG MPC 6 off and consult a heart expert.

3. Device description

3.1. General

Thank you for choosing the DLoG MPC 6.

The DLoG MPC 6 is a multi-function PC designed for stationary and mobile use. Thanks to its rugged design (aluminum housing), the device provides effective protection against mechanical, electrical and chemical influences and extreme ambient temperatures. It is designed without an external fan to reduce maintenance requirements.

The particular advantage offered by the DLoG MPC 6 is the extreme diversity of functions combined with its compact design. By applying ultramodern technologies for display and touch screen, the DLoG MPC 6 combines excellent image quality with the simplest operability.

Figure 3.1: DLoG MPC 6 with optional mount

3.2. Intended usage

The DLoG MPC 6 is a multifunction terminal for stationary and mobile use in commercial applications (for example logistics, storage, manufacturing).

A different or extraordinary usage is not permitted.
For resulting damage the user/operator of the DLoG MPC 6 is solely responsible. This also applies to any changes you make to the device.

Compliance with the contents of the safety guidelines is particularly important for the proper use of this device.

3.3. The models: DLoG MPC 6/110 and DLoG MPC 6/112

This manual applies to the following models of the DLoG MPC 6:

- for the DLoG MPC 6/110 with 10.4“ display
- and for the DLoG MPC 6/112 with 12.1“ display

Any differences between the devices will be clearly noted in this manual.

3.4. Abbreviations used for devices and accessories

Please note that to save space on the DLoG MPC 6 and supplied accessories, the following abbreviations have been used:

Abbreviation	Explanation
+	DC+
-	DC-
Ign	Ignition

3.5. Device description and type identification

3.5.1. Device type plate

The device type plate on the DLoG MPC 6 contains the following information:

DLoG MPC 6	Describes the device DLoG MPC 6 with a connection level and a 10” or 12” display
SVGA or VGA	Display resolution
AC or DC	Type of power supply, the following numbers (1-9) indicate the exact type of power supply with input voltage
H	H stands for heating, further letters denote other device options
e.g., 24/48 V with 6.2 A	Input voltage of the DC power supply with nominal current or AC power supply with additional frequency display
e.g., 800 MHz	Clock rate of the CPU
S/N	11 or 12 digit serial number composed of: • DLoG specific device code (29 stands for the DLoG MPC 6 model range) • Indication of the week of manufacture (e.g., CW 14) • Indication of the year of manufacture (e.g., 2006) • Five or six digits for internal DLoG identification

Example of a device type plate

Figure 3.2: Example of a device type plate

3.6. Technical specifications

3.6.1. Mechanical

Housing	Rugged aluminum-cast housing with integrated heat sink Protection class IP54 (upgradeable to IP65) ESD safe Weight of the DLoG MPC 6 with a 10.4” front panel: approx. 4.0 kg (depending on configuration)
Display panel	10.4" SVGA, 230 cd/m^2, optional 4-wire resistive touch screen , with brightness adjustment 10.4" SVGA, 400 cd/m^2, optional 4-wire resistive touch screen, with brightness adjustment 12.1" SVGA, 350 cd/m^2, optional 8-wire resistive touch screen , with brightness adjustment 12.1" XGA, 400 cd/m^2, optional 8-wire resistive touch screen, with brightness adjustment
Bottom	Cable cover (splash guard)
Top	Optional antenna fitting for wireless LAN

3.6.2. Motherboard

CPU	Intel® Celeron® M 800 MHz, ULV Intel® Celeron® M 373, 1 GHz, ULV
Chipset	Intel® 82915GM Northbridge and graphic chip Intel® 82801 FBM (ICH6-M) Southbridge
Bus Interface	PCI bus (PCI 2.1)
Cache	64 kB level 1 cache: internal in the CPU 0 kB level 2 cache on the 800 MHz CPU: CPU-internal 512 kB level 2 cache on the 1 GHz CPU: CPU-internal
RAM	256 to 1024 MBytes in one SO-DIMM slot Fully cacheable DDR2 technology
BIOS	AMIBIOS8® -1 MByte Flash BIOS with ACPI, PnP Programmable in the system BIOS POST self test
Slots for standard plug-in cards	A riser card is available for expansions: 1 PCI slot 32 bit 5 V
Real-time clock	Real-time clock with a power reserve of up to 10 years
IDE interface	Supports up to two IDE devices from PIO Mode 3/4 to UDMA/33. Connection via a 44-pin connector (2 mm grid). Connectable devices: 2.5" hard drives (enquire which capacities are currently available) 2.5" Flash disks (IDE) (enquire which capacities are currently available) Compact Flash type I/II Important notes for Compact Flash Cards: Only use Compact Flash Cards approved and released by DLoG to ensure the device functionality. Otherwise data loss could increase.

	The Compact Flash Cards used in the DLoG MPC 6 must be industrial and non removable models.
Floppy disk drive	Supports an external 3.5” USB floppy disk drive Protected to ESD level 4 (according to EN 61000-4-2)
Fan	Optional
Serial ports	1st serial port: 115,200 Baud max (16550A compatible, 16 byte FIFO), supports RS-232 on an external 9-pin D-Sub connection ESD level 4 protected (acc. to EN 61000-4-2) 2nd serial port: 115,200 Baud max (16550A compatible, 16 bytes FIFO), supports RS-232 on an external 9-pin D-Sub connection ESD level 4 protected (acc. to EN 61000-4-2) 3rd serial port: 115,200 Baud max (16550A compatible, 16 bytes FIFO), internal for the integrated environment controller 4th serial port: 115,200 Baud max (16550A compatible, 16 bytes FIFO), internal for integrated touch controller
Keyboard/mouse connection	Keyboard/mouse: 6-pin mini DIN connector, combination connector, Y cable for PS/2 keyboard and mouse required Internally-protected power supply for keyboard and mouse ESD level 4 protected (acc. to EN 61000-4-2)
USB-connection	2 stacked USB connections (USB 2.0 HiSpeed) with 0.5 A per port protected by fuse ESD level 4 protected (acc. to EN 61000-4-2)

Software compatibility	MS-DOS 6.x Windows XP Professional Windows XP Embedded Linux

3.6.3. LCD/CRT interface

VGA controller	Integrated Intel® Graphics Media Accelerator 900 with maximum 224 MByte Dynamic Video Memory Technology (DVMT 3.0) Shared memory architecture Resolution up to 1600 x 1200 (UXGA)Up to 24 bit color depth, depending on which LCD is used Simultaneous use of LCD/CRT Multiple LCDs are supported Drivers available for Windows XP Professional, XP Embedded and Linux

3.6.4. Touch screen (optional)

Analog touch controller	12bit touch controller for 4/5/8-wire resistive touch screens with RS232 and PS/2 interface. Drivers available for MS-DOS 6.2x, Windows XP Professional, XP Embedded and Linux
Analog touch screens	Available for 10.4” and 12.1” LCD displays, others on request
Analog touch connection	Internal plug-in connector Interface is ESD level 4 protected (acc. to EN 61000-4-2)

3.6.5. Network interface

Network controller	Intel® ICH6M with PHY Intel® 82562 controller: 10/100 MB/s Drivers available for MS-DOS 6.2x, Windows XP Professional, XP Embedded and Linux
Network connection	RJ45 plug-in connector Integrated transmitter Two integrated status LEDs

3.6.6. ADC/MDC interface (optional)

Properties	4 electrically-isolated outputs, 16 electrically-isolated inputs PCI bus Drivers available for Windows XP Professional and XP Embedded
ADC/MDC connection	A 37-pin D-Sub connector

3.6.7. Cardbus interface (optional)

Cardbus controller	Ricoh R5C485 PCI Ver. 2.2 Driver support through Windows XP Professional, XP Embedded and Linux (only operating system support, plug-in card drivers from the manufacturer)
Cardbus slot	1 x type 1 or 1 x type 2 Accessible at the back of the unit

3.6.8. PCI Express® MiniCard interface for WLAN (optional)

PCI Express MiniCard slot	1 USB 2.0 High Speed 1x x1 PCI Express® Lane No SIM card mounts available, therefore, for example, no GSM, UMTS etc. cards can be used Driver support through Windows XP Professional, XP Embedded and Linux (only operating system support, plug-in card drivers from the manufacturer)

3.6.9. Power supply

The device model is displayed on the device type plate.

AC internal power supply	115 V/230 V, 50 to 60 Hz Maximum output 100 W Electrically-isolated Optional automatic shutdown software, supports Windows XP Professional, XP Embedded and Linux Withstands 4 kV burst Type: AC-1 Nominal current 1 A
DC power pack 24/48 VDC 60 W internal type DC-2	24/48 VDC nominal (down to 11 V for 20 s max.) Voltage range: 18 to 60 VDC Covers power outages up to 5 ms Electrically-isolated Maximum output 60 W Optional automatic shutdown software, supports Windows and Linux Optional temperature display Withstands bursts up to 2 kV Nominal current of 3.7 A Connection to SELV circuit[2)] only
DC power pack 24/48 VDC 100 W internal type: DC-3	24/48 VDC nominal (down to 11 V for 20 s max.) Voltage range: 18-60 VDC Covers power outages up to 5 ms Electrically-isolated Maximum output 100 W Optional automatic shutdown software, supports Windows and Linux Optional temperature display Withstands bursts up to 2 kV Nominal current 6.2 A Connection to SELV circuit[2)] only

DC power pack 12 VDC 100 W internal type: DC-1	12 VDC nominal (down to 6 V for 20 s max.) Voltage range from 9 to 16 VDC Covers power outages up to 5 ms Electrically-isolated Maximum output 100 W (at 9 to 16 VDC) 80 W (at 6 to 9 VDC) Optional automatic shutdown software, supports Windows and Linux Optional temperature display Withstands bursts up to 2 kV Nominal current of 15 A Connection to SELV circuit[3)] only
Power consumption	Type:30 W (DLoG MPC 6/110 SVGA with Compact Flash) Max. 100 W (DLoG MPC 6/110 VGA with Compact Flash in heating mode) Standby 1W (DLoG MPC 6/110 SVGA with DC power pack in standby mode)

[1,2,3)] The SELV circuit is a secondary circuit that is designed and protected so that its voltages will not exceed a safe value both when operating correctly or if a single error occurs.

3.6.10. Maximum power available for peripheral devices

Power supply	Motherboard	with no internal fan	with internal fan
DC-1	800 MHz motherboard	24 W	28 W
DC-1	1 GHz motherboard	16 W	20 W
DC-3	800 MHz motherboard	13.2 W	26.2 W
DC-3	1 GHz motherboard	5 W	18 W
AC-1	800 MHz motherboard	13.2 W	26.2 W
AC-1	1 GHz motherboard	5 W	18 W

3.6.11. Power supply fuses

The symbol for the fuse is FA.

You will find the exact position on the sticker located on the connection plate (*Section 5.3 External connectors*).

Power supply	Fuse type	Examples
DC-1, DC-5	5x20mm T 16A L/250V	Wickmann 195-2160 16A/250V Siba 179120 (SIBA #. 7000135) 16A/250V or similar devices produced by other manufacturers
DC-2	5x20mm T 6.3A H/250V	Bussman S505-6.3A Wickmann 181-6.3A Littelfuse 215 06.3 Schurter 0001.2512 Siba 70 007 65 6.3A Elu 179200 6.3A or similar devices produced by other manufacturers
DC-3, DC-4	5x20mm T 12.5A L/250V	Wickmann 195-2125 12.5 A/250 V Siba 179120 (SIBA Nr. 7000135) 12.5 A/250 V or similar devices produced by other manufacturers
AC-1	5x20mm T 1.25A H/250V	Wickmann 181-1.25 A or similar devices produced by other manufacturers

3.6.12. Ambient conditions

You can obtain even more information on the currently used displays and their temperature ranges on the Internet at www.dlog.com.

Operating temperature

All specifications in accordance with EN 60068-2-1/2

The permissible ambient temperature depends on the display used:

Display	Operating temperature [°C]	Operating temperature with heating [°C]
10.4” VGA	0 to +50	-30 to +50
10.4" SVGA 230cd	0 to +35	no heating possible
10.4" SVGA 400cd	0 to +50	-30 to +50
12.1" SVGA	0 to +50	-30 to +50
12.1" XGA	0 to +50	-30 to +50

Storage temperature

All specifications in accordance with EN 60068-2-1/2

The permissible ambient temperature depends on the display used .

Display	Storage temperature [°C]
10.4” VGA	-35 to +65
10.4" SVGA 230cd	-20 to +60
10.4" SVGA 400cd	-20 to +80
12.1" SVGA	-20 to +80
12.1" XGA	-20 to +80

Note: The storage temperature's lower limit may exceed the permissible operating temperature range. In such cases, the unit may be powered up to the minimum storage temperature and used in the full range of operating temperatures after the heating phase.

Relative humidity	10% to 90% at 40° C, non-condensating In accordance with EN 60068-2-3
Mechanical vibration and shock-resistance	Class 5M3 according to EN 60721-3-5: 1998 (land vehicles), 5 hrs with 3.6 g effective noise and 36 vibrations with 30 g peaks or US highway truck according to MIL-STD 810F: 2000 (Department of Defense), 3 hrs with 1 g effective noise and 600 vibrations with 20 g peaks in operation, with Flash disk

3.6.13. Test marks

CE	EN 55022 Class B EN 55024, EN 61000-3-2, EN61000-3-3, EN 61000-6-2 IEC 60950-1, EN 60950-1, UL 60950-1 EN 300328-1 and EN 301489-17, in case DLoG data transmission devices operating in the 2.4 GHz spectrum have been installed

3.6.14. Dimensions

1. DLoG MPC 6/110 SVGA

Front view

Dimensions without add-ons (in mm):

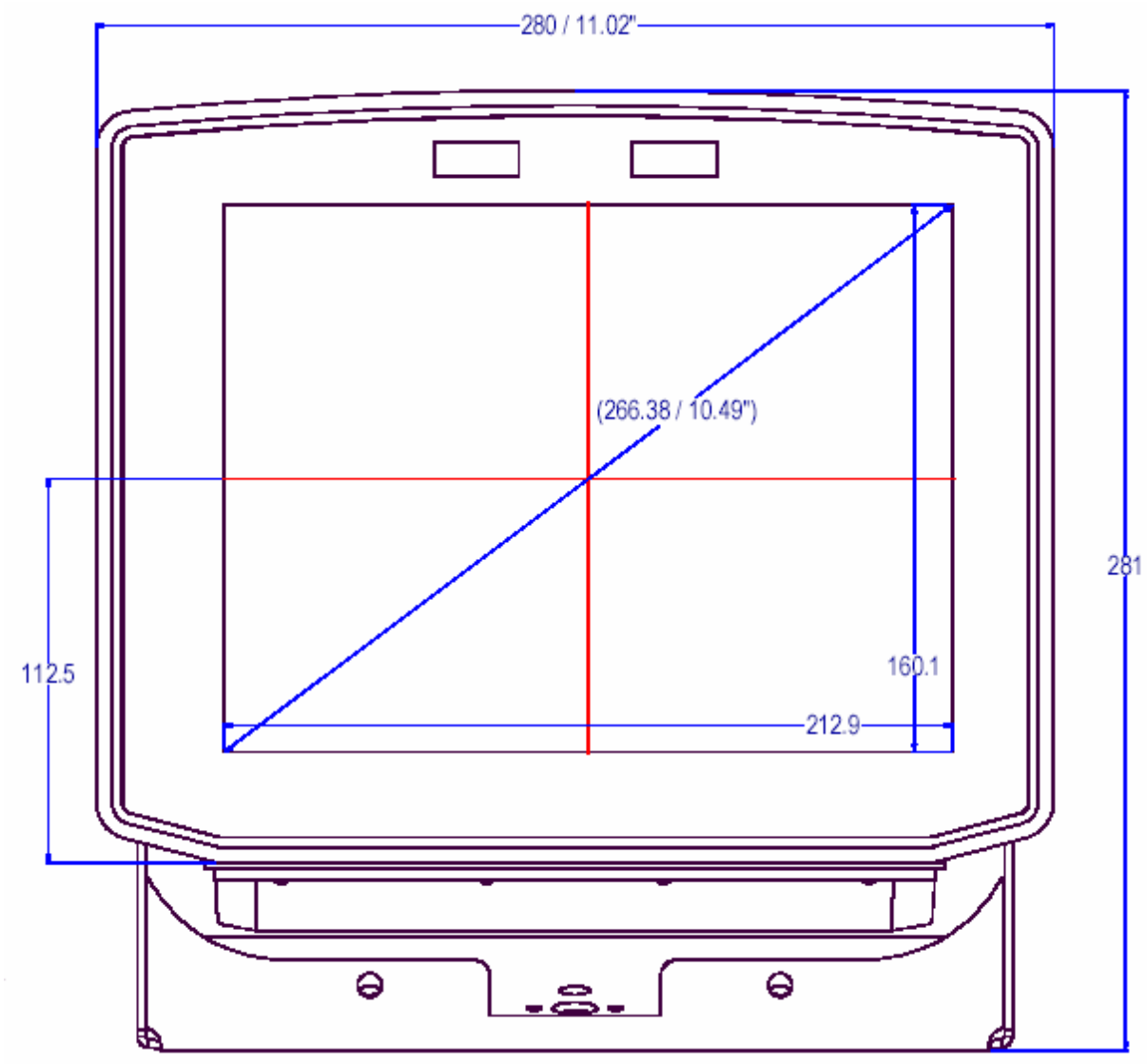

Figure 3.3: DLoG MPC 6/110 SVGA front view

Side view

Dimensions without add-ons (in mm):

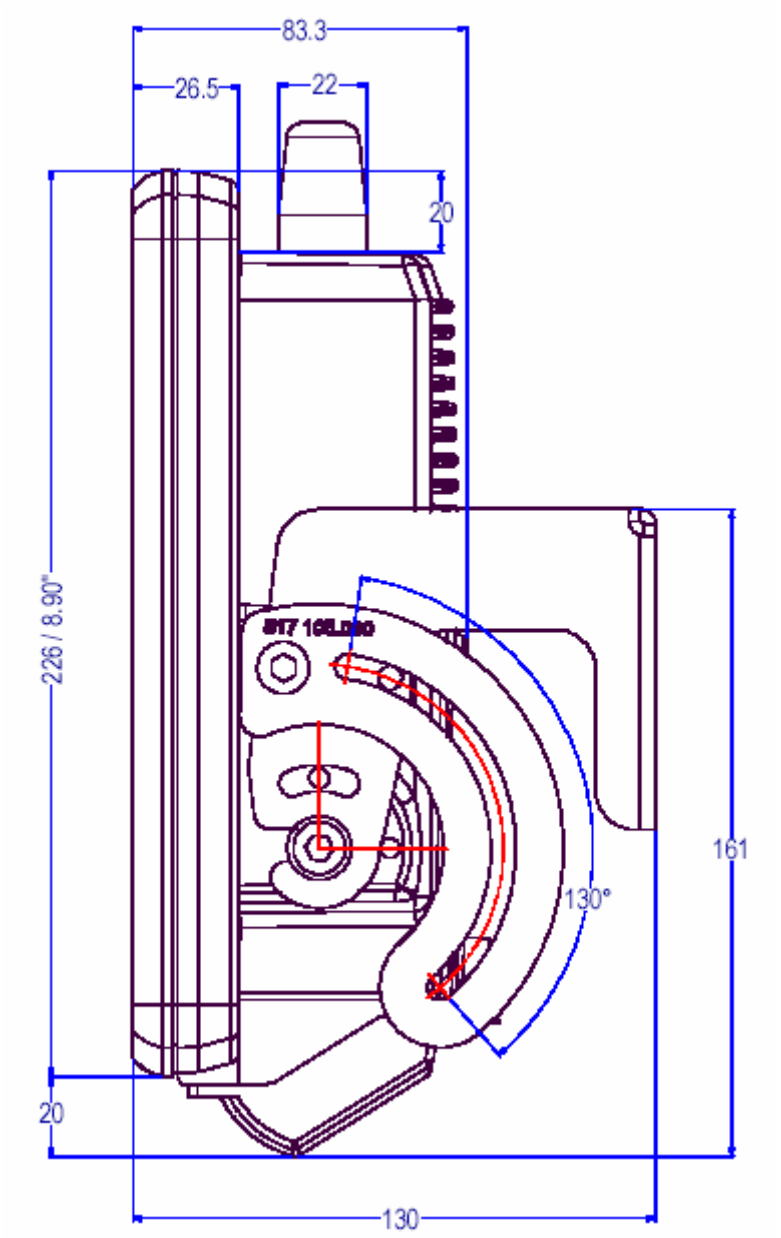

Figure 3.4: DLoG MPC 6/110 SVGA side view

Top view

Dimensions without add-ons (in mm):

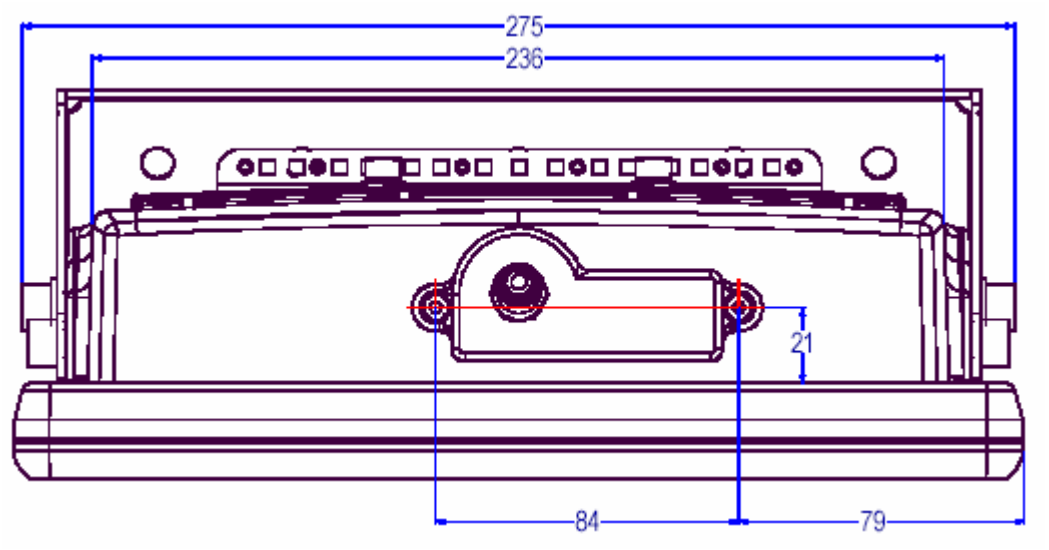

Figure 3.5: DLoG MPC 6/110 SVGA top view

2. DLoG MPC 6/112

Front view

Dimensions without add-ons (in mm):

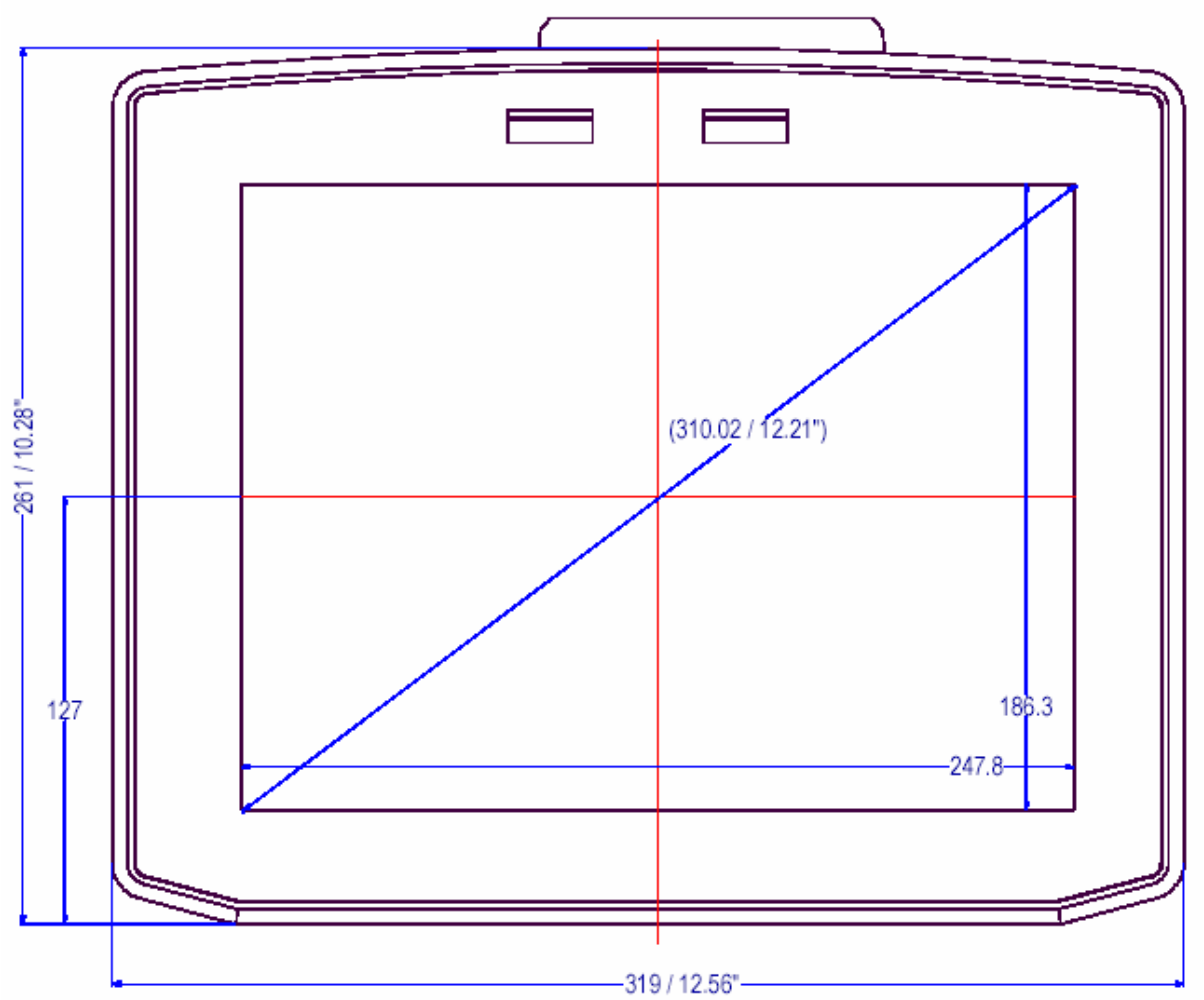

Figure 3.6: DLoG MPC 6/112 front view

Side view

Dimensions without add-ons (in mm):

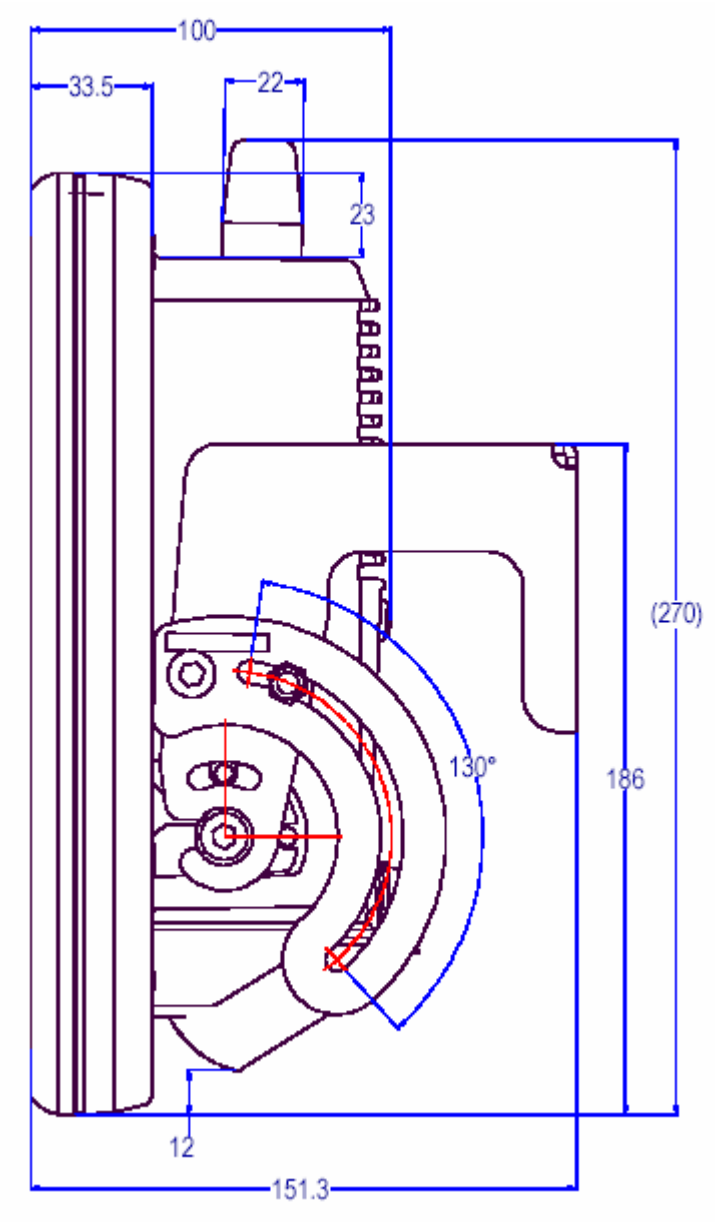

Figure 3.7: DLoG MPC 6/112 side view

Top view

Dimensions without add-ons (in mm):

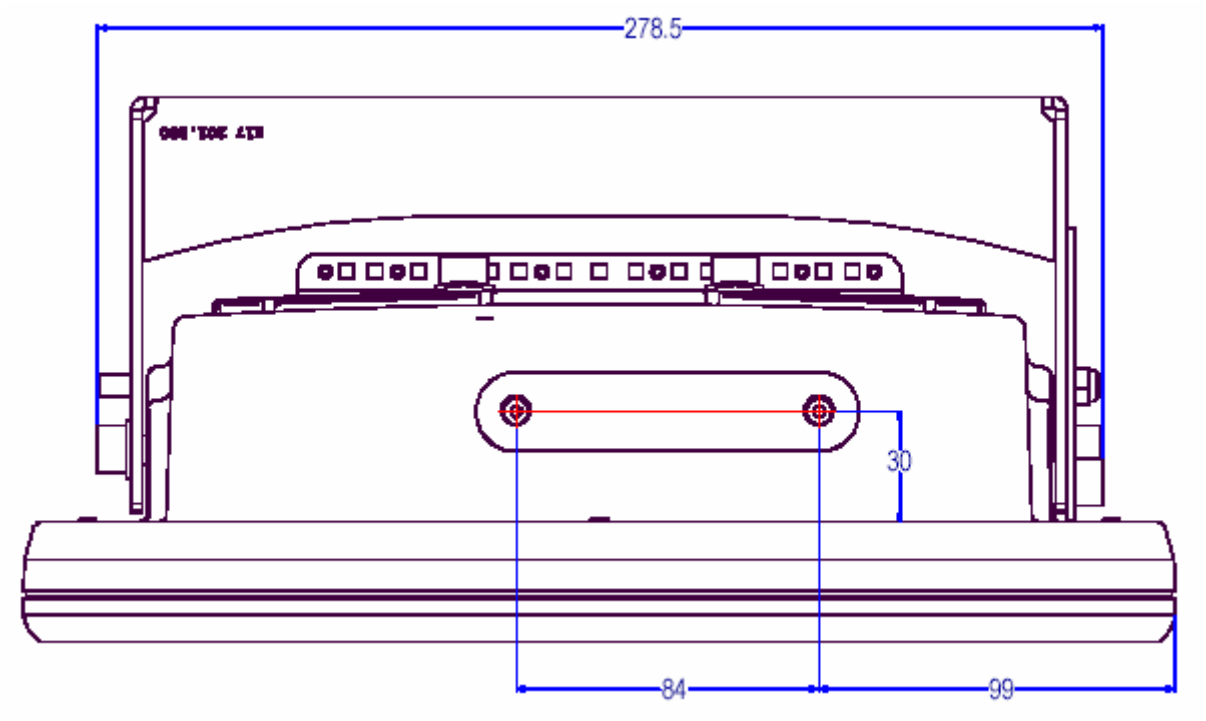

Figure 3.8: DLoG MPC 6/112 top view

3.6.15. VESA drill holes

The VESA drill holes on the DLoG MPC 6 are visible on this diagram.

Dimensions without add-ons (in mm):

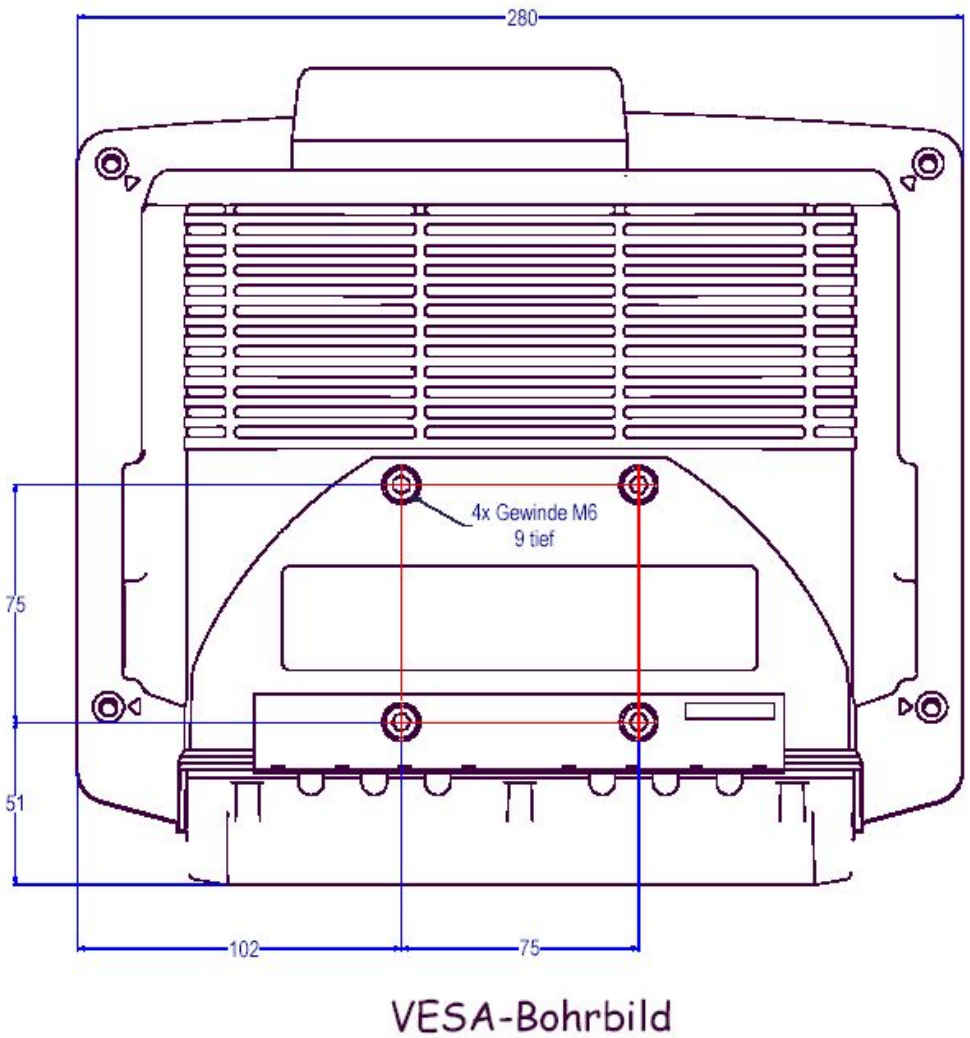

Figure 3.9: DLoG MPC 6/110 with VESA drill holes

4. Unpacking the DLoG MPC 6

4.1. Scope of delivery

The delivery includes at least the following:

- DLoG MPC 6 with strain relief rail
- Ordered assembly set
- Cable cover
  (standard = IP54; optional = IP65 with strain relief rail)
- One DC or AC connecting cable
- One IPC/MPC driver CD per delivery
- One printed manual per delivery

Please verify the delivery contents immediately on receipt!

4.2. Packaging

The packaging material has been selected to optimally protect your device while simultaneously offering the best possible ecological compatibility. We therefore kindly request that you store the original packaging material or ensure it is used for another suitable purpose such as transporting the unit or returning shipment.

If you repack the device, please ensure that the cling wrap in the cardboard frame is positioned towards the front of the device so that it can provide the proper protection.

4.3. Returning your device

Due care was exercised when putting together the contents of your delivery and dispatching your device. Nevertheless, if you still have cause for complaint, please complete the form included in the appendix.

Should you need to return the device, please use the original packaging.

5. Putting your DLoG MPC 6 in operation

Before operating the unit for the first time , carefully read the safety guidelines at the start of this manual.

5.1. Cooling through the supply of fresh air

The DLoG MPC 6 employs a passive cooling concept whereby the waste heat generated inside the device is emitted from the surface of the housing. For this system to function properly, sufficient fresh air circulation is required.

Never install the system in a closed environment where the cooling air is unable to dissipate accumulated heat to the outside.

If the DLoG MPC 6 does not have access to fresh cooling air, it may result in overheating and severe damage to the unit. The maximum permissible ambient temperature for the entire system needs to be taken into account for the concrete application area.

5.2. Pin configuration

This section describes the pin configuration for all DLoG MPC 6 plug-in connectors.

The pin configuration is based on the MPC6.20 06.2006 motherboard.

5.3. External connectors

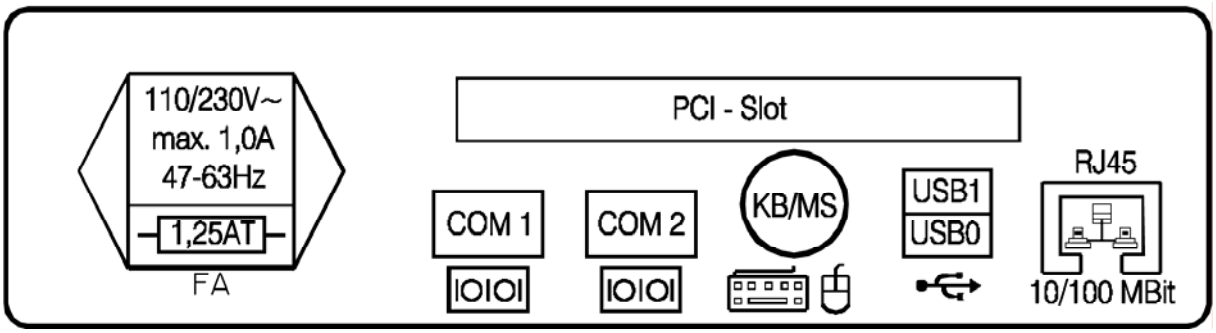

Figure 5.1: External connectors, AC version

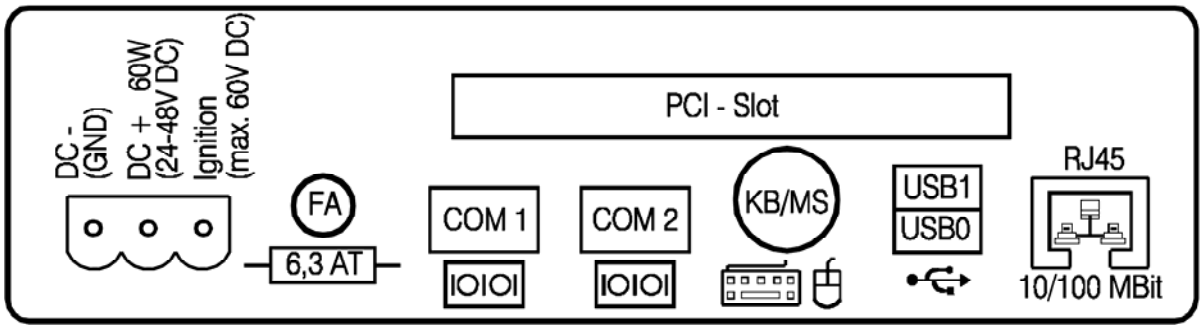

Figure 5.2: External connectors, 24/48 VDC 60 W version

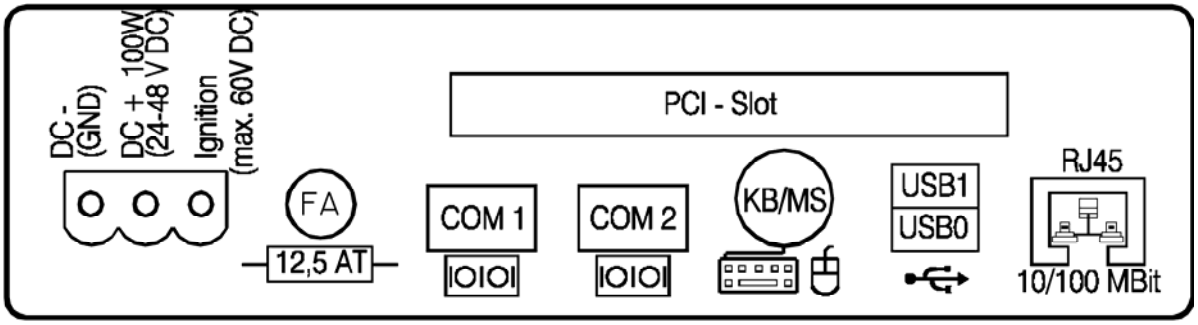

Figure 5.3: External connectors, 24/48 VDC 100 W version

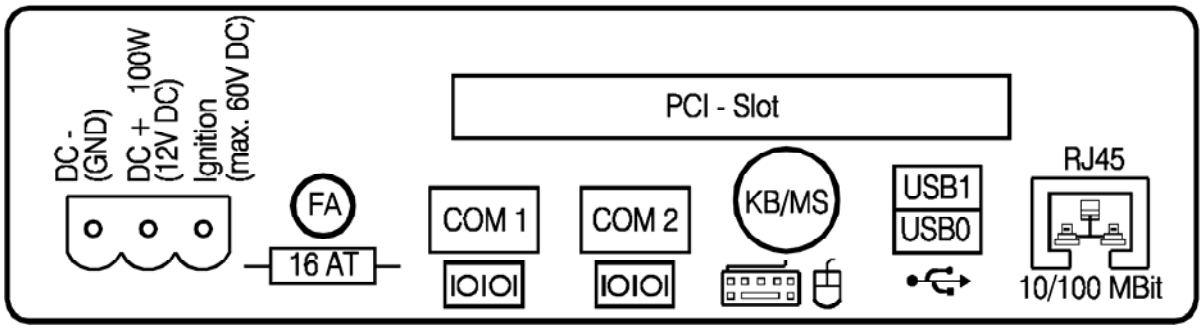

Figure 5.4: External connectors, 12 VDC 100 W version

5.3.1. AC voltage supply connector

Version: Standard power plug (IEC 320 compliant), 3-pin.

Outside view of the connector:

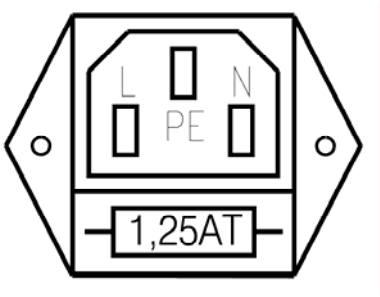

Figure 5.5: Exterior view of the AC power supply connector

5.3.2. DC voltage supply connector

Version: Phoenix Combicon, 3-pin.

External view:

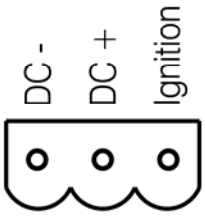

Figure 5.6: Exterior view of the DC power supply connector

Explanation:

Ignition on means that a control signal has to be routed to this connection (e.g., ignition of a vehicle), that matches the supply voltage level and is able to supply at least 2 W to the DLoG MPC 6.

The signal reference is DC−.

3. DLoG MPC 6 supply cable

The following diagrams show the DC device's supply cable .

12 V supply cable	24/48 V supply cable
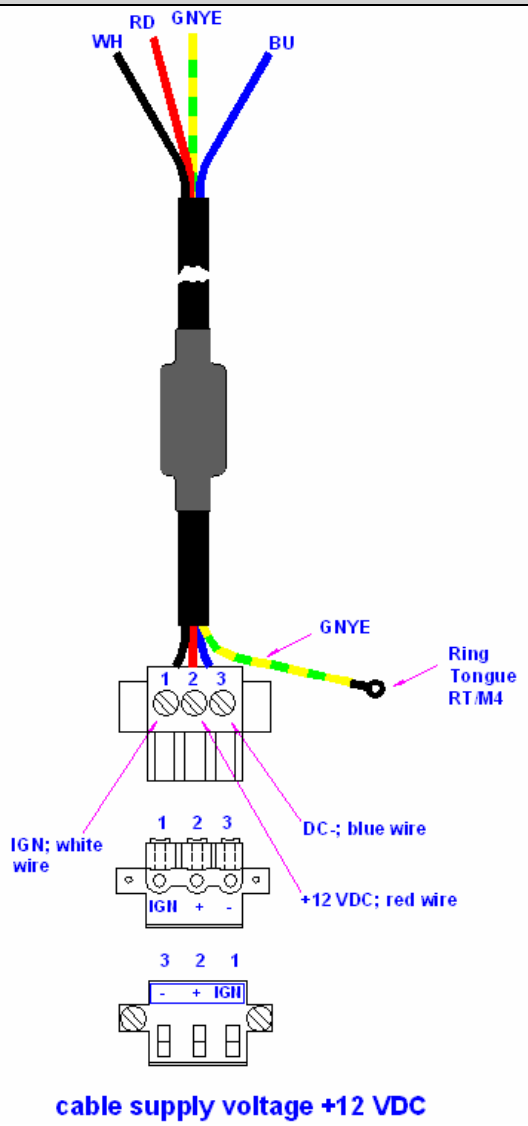	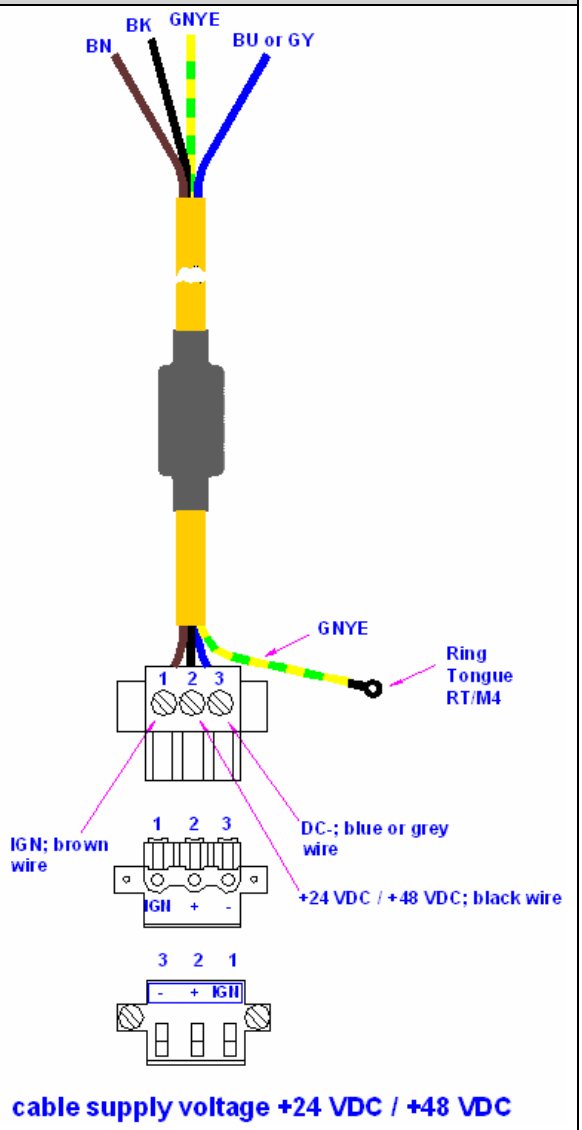

Figure 5.7: Cable diagrams of the DC device's supply connection

5.4. Connecting external devices

The DLoG MPC 6 must be disconnected from the power supply:

- before external devices (e.g., scanner, keyboard) can be connected or disconnected
- and before the DLoG MPC 6 can be connected to a network.

All connections and interfaces on the DLoG MPC 6 are located on the underside of the unit.

Before connecting or disconnecting peripheral devices (exception: USB devices), the DLoG MPC 6 must be disconnected from the power supply! If the DLoG MPC 6 is equipped with an optional UPS battery, only open the device after the power LED has gone out. Otherwise, this could seriously damage both the DLoG MPC 6 and the connected devices!

Make sure that external peripheral devices with their own power supply are switched on at the same time as the DLoG MPC 6 or after you start the DLoG MPC 6. If this is not possible, please ensure that the DLoG MPC 6 is adequately protected from power leakage caused by an external device.

5.4.1. Powering down the DLoG MPC 6

Always shut down the DLoG MPC 6 as follows:

1. If your DLoG MPC 6 has a DC power pack and automatic shutdown software, power down the device using the ignition input.
2. If your device has an AC power pack and automatic shutdown software, power it down using the power button.
3. Remove the cable cover .
4. Disconnect the device from the DC or AC supply voltage (pull the plug).

The DLoG MPC 6 is only shutdown once the Power LED has gone out.

Powering up the DLoG MPC 6

Only power up the DLoG MPC 6 when all devices have been connected and the DLoG MPC 6 has been closed correctly (remember the cable cover!). Otherwise, you may damage the DLoG MPC 6!

5.5. WLAN settings

5.5.1. Radio performance

Do not exceed the maximum permissible transmitting power which is specified by each separate country. DLoG MPC 6 users must verify this themselves.

Please keep in mind the configuration for the transmitting power:

- Wireless card (programmed driver capacity)
- Connecting cables
- Antenna

Help table for the correct setting:

Translation between mW and dBm																						
dBm	-1	2	5	6	7	8	9	10	11	12	13	14	15	16	17	18	19	20	21	22	23	24
mW	1	2	3	4	5	6	8	10	12	15	20	25	30	40	50	60	80	100	125	150	200	250

5.5.2. DLoG antenna solutions for use in Germany

The integrated DLoG antenna solutions are based on the prevailing IEEE.802.11b standard, which allows wireless data transfer at rates from 54 Mbps to 1 Mbps using the 2.4 GHz band.

In Germany according to regulations published in the gazette 89/2003 of the RegTP (regulating body for telecommunications and mail), now: “Bundesnetzagentur” - Federal network agency for electricity, gas, telecommunications, post and railway - the maximum permissible transmitting power, EIRP (equivalent isotropically radiated power), in the 2.4 GHz frequency band is set at 20 dBm.

The transmitting power of the two integrated DLoG antennas (DLoG 4 dBi or DLoG 5 dBi) must be set to 30 mW (15 dBm) so that the EIRP limit value is adhered to when using the antenna.

To set the transmitting power of the wireless card, please read the documentation on the wireless card.

5.6. Removing the protective film from the display

The display of the DLoG MPC 6 is protected during transport by a transparent film. This film should remain on the display during assembly to avoid damage to the display surface.

Only remove the film once all of the assembly work has been completed.

5.7. Powering up the DLoG MPC 6

Only power up the DLoG MPC 6 after connecting all of the devices.

The DLoG MPC 6 is powered up by connecting it to an appropriate power supply and then, depending on the version of the device, either using the power switch or the ignition signal

Make sure there is a suitable disconnecting device such as a power switch or circuit breaker in the power supply circuit.

5.8. Protecting the TFT display from the memory effect

The TFT display of the DLoG MPC 6 has to be protected from the burning in of a motionless image. An image that has remained motionless for too long can cause irreversible damage to the display. With TFT displays there no cathode rays burning in an afterimage as in old TV sets or monitors, but TFT displays still have a “memory effect”. This is because with a still image the liquid crystal molecules align themselves in a certain way and become inert if they are not moved. Like burning in the effect is irreversible, but can be avoided by regularly turning off the display or by using a screensaver with changing content.

Define in the power management center of the utilized operating system that the displays of the DLoG MPC 6 should be turned off when no user input occurs.

A motionless image can stay on the display for a maximum of 12 hours. After more than 12 hours there is the risk of the “memory effect”.

Important for the lifespan of the backlighting:

Choose a turn off time that is definitely not too short (not less than 30 min) since frequent turning on of the backlighting will noticeably reduce its lifespan. This particularly applies at low temperatures. Here the backlighting of the display should never be switched off but instead a screensaver should be used which displays a changing or completely black screen in order to achieve the maximum lifespan of the backlighting.

6. Accessories

6.1. Keyboard

On the DLoG MPC 6 any keyboard with a 6-pin Mini-DIN plug can be connected (PS/2).

Resources for the keyboard controller are pre-defined in the system architecture and automatically managed by the BIOS.

All keyboards can be used with all operating systems. No additional drivers are required.

6.1.1. SMALL keyboard

A mountable SMALL keyboard (German/English) is available for the DLoG MPC 6, protection class IP 65.

Figure 6.1: SMALL keyboard on the DLoG MPC 6

SMALL keyboards available from DLoG:

- Desktop SMALL keyboard, English and German
- Add-on version SMALL keyboard, English and German, this add-on version can be attached to a stationary or mobile mounting bracket with a mounting kit.

6.1.2. 24-key keypad

A 24-key keypad which can be mounted onto the device, with a protection class IP 65 is available for the DLoG MPC 6.

Figure 6.2: 24-key keypad on the DLoG MPC 6

6.2. Mouse

Any PS/2-compatible mouse with a standard Mini-DIN plug, USB connector or RS-232 port can be connected to the DLoG MPC 6.

If the mouse has a PS/2 connection, a Y cable is also required.

> It is not possible to use a PS/2 mouse during Touch operations, if you use the touch controller in PS/2 mode. By default, however, the touch controller is operated via COM4.
>
> Of course a USB mouse or a RS-232-mouse can always be used in combination with touch mode.

Resources for the PS/2 mouse controller are pre-defined in the system architecture and automatically managed by the BIOS. This is also the case for RS-232 and USB mouse devices.

Drivers for MS-DOS operation need to be supplied by the control device manufacturer (order if necessary).

Support for the USB mouse under MS-DOS can be provided with a PS/2 driver, since here it is managed by the BIOS.

Special functions, such as those provided by wheel mouse devices, frequently require additional drivers, which are to be supplied by the manufacturer.

6.3. External CD-ROM drive

An external CD-ROM drive is available for the DLoG MPC 6. This is connected via the USB port.

When connecting an external USB CD-ROM drive which has its own external power supply the DLoG MPC 6 must be disconnected from the power supply. The CD-ROM must be powered up **simultaneously** or **after** the DLoG MPC 6 as otherwise this can cause start-up problems, malfunctions, or even the destruction of the device.

Please note: Not every device classified as a USB CD-ROM is a proper USB CD-ROM drive. Only use devices approved by DLoG to ensure the device is fully compatible.

Operation

The CD-ROM drive port is provided via USB. The drive, which is supplied in a separate housing, is connected to one of the sockets on the back of the DLoG MPC 6.

Depending on the model, the external drive is powered either via the DLoG MPC 6 connecting cable or via a separate external power supply.

If USB has been activated in the BIOS, the CD-ROM drive is automatically recognized and made available by the BIOS.

The CD-ROM drive is bootable once it has been properly installed. To boot from a CD-ROM, insert a bootable CD and start the system.

In the BIOS USB CDROM must be entered as a boot device.

Resources and drivers

Resources for the USB port are pre-defined in the system architecture and automatically managed by the BIOS.

Drivers for the various operating systems need to be supplied by the drive manufacturer (order if necessary).

6.4. External floppy disk drive

An external floppy disk drive is available for the DLoG MPC 6.

Operation

The floppy disk drive port is provided via USB. The drive, which is supplied in a separate housing, is connected to one of the sockets on the underside of the DLoG MPC 6.

Power is supplied to the external drive by the DLoG MPC 6 via the USB connecting cable. If USB has been activated in the BIOS, the floppy disk drive is automatically recognized and made available by the BIOS.

The floppy disk drive is bootable once it has been installed correctly.

To boot from drive A: Insert a bootable floppy disk and start the system.

In the BIOS USB **Floppy** must be entered as the first boot device.

Resources and drivers

Resources for the floppy disk drive controller are pre-defined in the system architecture and automatically managed by the BIOS.

The floppy disk drive is automatically supported by all modern operating systems.

6.5. USB stick

You can connect a USB stick to the DLoG MPC 6 with a USB-A connector.

6.6. Scanners

You can connect scanners to either the USB, PS/2 or serial port. If connected to COM1, the scanner can be powered through the port (optional).

Be sure to only use scanners that have been approved by DLoG.

6.7. WLAN cards (PC card, cardbus, PCIe minicard)

WLAN cards are plugged in to the PC card/cardbus slot or at the PCIe minicard slot (according to the specified option which cannot be changed!).

If you received the WLAN card from DLoG the correct driver will already be installed.

If you want to use other WLAN cards the correct driver must be installed.

Generally, only drivers for WLAN cards that have been approved by DLoG can be integrated into the Images operating system.

7. Installation

7.1. Options for installing the device

The DLoG MPC 6 can be installed in a variety of ways:

- It can be positioned horizontally on a desk or mounted on a steering wheel and vehicle console.
- Wall mounts are also available for mounting the unit on machines and operating panels.
- Roof mounting is also possible, for example under the vehicle roof.

Depending on the vibration resistance and pivoting demands, mounting brackets, clamp foots or RAM mount elements can also be used to attach the device. Please contact your DLoG sales office to find out more about the whole range of installation options on offer.

Risk of injury

The unit could fall during transit or installation and cause injury. Always ensure that there are two persons available when installing or removing the device.

7.2. Permitted mounting positions

The permitted mounting positions of the DLoG MPC 6 have been defined as follows:

From a maximum of -90° Up to a maximum of +90°

Figure 7.1: Permitted mounting positions of the DLoG MPC 6

The DLoG MPC 6 can only be mounted in a range of 180° as illustrated.

7.3. Follow and retain the installation instructions

Please follow the installation instructions included with assembly kit when installing your DLoG MPC 6.

Please make sure that you retain the installation instructions. Pay careful attention to the important safety notices included in the beginning of this manual.

7.4. Mechanical dynamic loading

Since the DLoG MPC 6 is a weighted structure, it is invariable that the unit will be subject to mechanical dynamic effects. Therefore optimizing the mounting can be very helpful.

Please refer to *Appendix E: Mechanical dynamic loading.*

7.5. Power supply

An integrated, electrically isolated AC/DC power supply is available for the DLoG MPC 6.

The power pack is designed to fulfill the requirements for the full range of operating temperatures of a DLoG MPC 6 with standard extension modules.

In a system with a 800 MHz CPU, 512 MB RAM, HDD, a 10.4” display and an external keyboard, this leaves approx. 20 W for plug-in cards and/or external devices.

7.5.1. AC power pack

An integrated, electrically isolated AC power pack is available for the DLoG MPC 6. This automatically adapts to the mains voltages 115 VAC or 230 VAC (50-60 Hz)

Its maximum output is 60 W.

Power is connected on the underside of the device via a standard plug for non-heating devices.

There is no power switch.

Ensure that there is a suitable disconnecting device such as a power switch or circuit breaker in the power supply circuit.

Ensure that the disconnecting device isolates all supply voltage lines.

7.5.2. DC power pack

Three different DC power packs, each fully integrated and electrically isolated, are available for the DLoG MPC 6:

- DC power packs with 18 to 60 VDC input voltage, maximum output 60 W
- DC power pack with 18 to 60 VDC input voltage, maximum output 100 W
- DC power pack with 9 to 16 VDC input voltage, maximum output 100 W

100 W power packs are required for the heating option.

Power is connected to the underside of the unit using a Phoenix Contact plug. There is no power switch.

In DC applications the DLoG MPC 6 must only be connected to a SELV (Safety Extra Low Voltage) circuit .[4)]

Ensure that there is a suitable disconnecting device such as a power switch or circuit breaker in the power supply circuit. Ensure that the disconnecting device isolates all supply voltage lines. See *Appendix B: Pin configuration.*

The DC+ - connecting cables must be protected by a fuse (30 AT max.).

The ignition connecting cables must be protected by a fuse of the following type: 5x20 mm T 125 mA L/250 V, for example, a Wickmann 195-125 mA/250 V.

[4)] The SELV circuit is a secondary circuit that is designed and protected so that its voltages will not exceed a safe value both when operating correctly or if a single error occurs.

7.5.3. Installing connecting cables

If possible, use the connecting cables supplied to connect the DLoG MPC 6 to the power supply.

Make sure that the connecting cables are laid without kinks and are protected.

7.6. Vehicle applications (such as forklifts)

Pay special attention to the various electrical potentials when installing the unit on a vehicle (such as a forklift). In the DLoG MPC 6, the logic ground and the shield ground are firmly linked.

The “logic ground” is the earth line (GND) for all of the internal electrical components, such as the hard drive and the CPU.

Cable shielding, the housing and the ground conductor (in AC-powered units) are connected to the shield ground.

Carefully read the following warnings!

- Never connect a 12 VDC device to a 24/48 VDC vehicle! The device model is written on the device type plate, a warning sticker on the front of the unit and on the external connector strip.
- Some forklifts have a chassis that is connected to DC+. Therefore, the DLoG MPC 6 chassis is also connected to DC+. However, if you use peripheral devices that supply DC– to the DLoG MPC 6 via an interconnector (such as a DC– serial port), this will cause a short circuit. This will inevitably lead to malfunctions or even a total system failure.
- In DC-powered devices, always attach ring tongues on the supply voltage cable to the ground bolt situated on the connector bay .

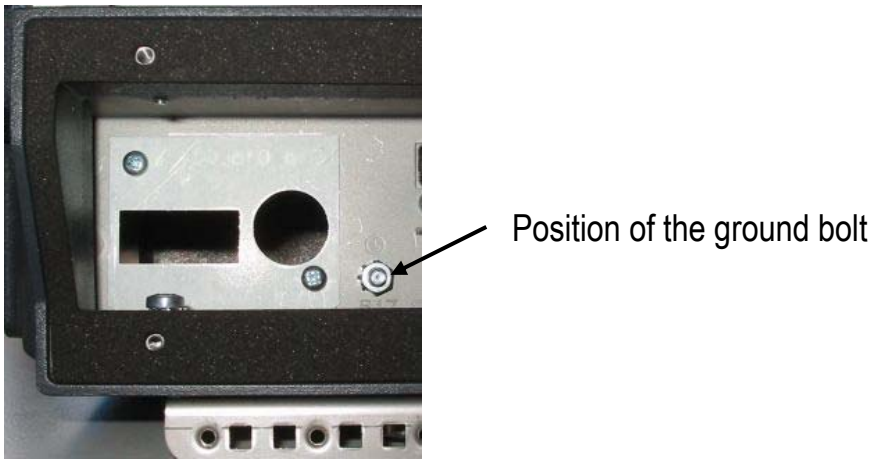

Figure 7.2: Position of the ground bolt

- The other end of the yellow-green supply voltage cable should be connected to the vehicle's chassis .
- Make sure that the DLoG MPC 6's connecting cable is attached as close to the battery as possible. Connecting the DLoG MPC 6 to large electrical loads, such as converters for the forklift motor may result in random restarts, malfunctions and/or irreparable damage to the device.
- If you want to connect devices fed by other power sources to the DLoG MPC 6, such as certain PS/2-Wedges, printers and so on, be sure to power up the peripheral devices at the same time or after the DLoG MPC 6. Otherwise, you may encounter start-up problems, malfunctions or even irreparable damage to the device.

7.7. Cable cover (splash guard)

For safety reasons, the supplied cable cover for the external ports must be installed prior to using the DLoG MPC 6.

7.7.1. Protection class IP65

In order to comply with protection class IP65, please use the optionally available IP65 assembly kit from DLoG. Please observe the installation instructions included with this assembly kit.

After finishing the mounting process the cables must be affixed using the included strain relief rail.

Figure 7.3: DLoG MPC 6 with strain relief

7.7.2. Protection class IP54

To ensure that the DLoG MPC 6 continues to conform to this protection category, proceed as follows:

1. Place the cables connected to and from the device next to each other. Avoid crossing the cables.
2. Attach the cables to the strain relief rail using the enclosed strain relievers. Ensure that the cables are attached exactly where the cable cover's cable opening is located.

Figure 7.4: DLoG MPC 6 without cable cover

3. Now attach the sealing ends onto the cables.

Take care not to damage the opening seal of the cable cover! It should be possible to attach the cable cover to the cable duct without using force. The neck collar screws should be screwed firmly, preferably diagonally and always using 5 rotations. The screws need to be retightened after 2 days.

Figure 7.5: DLoG MPC 6 with cable cover mounted

8. Operation

The DLoG MPC 6 is available with three different front panels:

- With a 4 key front panel
- With a 10 key front panel
- Or with a 25 key front panel

8.1. 4 key front panel

The DLoG MPC 6 with a 4 key front panel has the following controls:

- POWER ON/OFF for turning the unit on and off
- Manual brightness control with + or -
- As well as turning the backlighting on or off (“lightbulb” symbol)

You can find details on the functionality of these keys in section *8.3 25 key front panel*.

Figure 8.1: DLoG MPC 6 front panel with 4 keys

8.2. 10 key front panel

The DLoG MPC 6 with a 10 key front panel has the following controls:

- POWER ON/OFF for turning the unit on and off
- Manual brightness control with + or -
- As well as turning the backlighting on or off (lightbulb symbol)
- Arrow keys
- <Esc> and <Enter>

You can find details on the functionality of these keys in section *8.3 25 key front panel*.

Figure 8.2: DLoG MPC 6 front panel with 10 keys

8.3. 25 key front panel

Figure 8.3: DLoG MPC 6 front panel with 25 keys

The layout of the keys is the same for 10.4” and 12.1” displays.

Units with brightness control

Note for all units featuring a **brightness control**: Even after manually turning off the backlighting, the DLoG MPC 6 will continue to respond to interaction via the keyboard, mouse or touch screen. This means that you can continue to enter commands and data even if the display lighting is off.

8.3.1. Power key

	Turning the DLoG MPC 6 on and off: This button has been preconfigured by DLoG by default:	
	DLoG MPC 6 with DC power supply and automatic shutdown software	Power key is not used for powering up the unit. If the button is pressed before the shutdown delay time has elapsed, the unit is powered down immediately.
	DLoG MPC 6 with DC power supply without automatic shutdown software	Power key is used to power up the unit. If the button is pressed while the unit is operating, this results in a HARD shutdown. This may lead to data loss!
	DLoG MPC 6 with AC power supply and automatic shutdown software	Power key is used to power up the unit. If the button is pressed while the unit is operational, all applications are quit and the DLoG MPC 6 is properly shut down.
	DLoG MPC 6 with AC power supply without automatic shutdown software	Power key is used to power up the unit. If the button is pressed while the unit is operating, this results in a HARD shutdown. This may lead to data loss!

8.3.2. Manual brightness control/backlighting

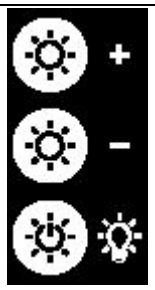	+ button for manual brightness control (optional) - button for manual brightness control (optional) Turning the backlighting ON/OFF

8.3.3. LEDs

	Temp (red) LED indicates an excessively high or low temperature inside the unit HD (green) LED indicates access of the hard drive/Compact Flash drive Power (green) LED indicates an available internal power supply

8.3.4. Function and number keys

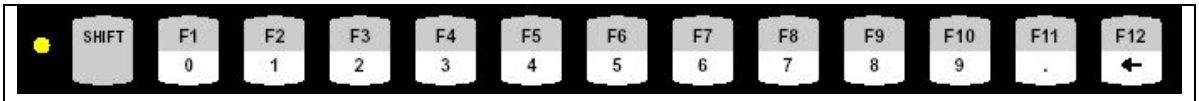

yellow LED: indicates the status of the <Shift> key

"0"/F1": digit “0“, or function key <F1> if the <Shift> key is pressed

to

"9"/F10": digit “9“, or function key <F10> if the <Shift> key is pressed

"." / F11": decimal point, or function key <F11> if the <Shift> key is pressed

"🡐 "/F12" "BACKSPACE" or. <F12> if the <Shift> key is pressed

8.3.5. Special keys

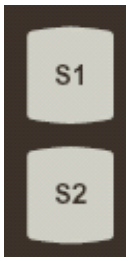	<S1> Special key: Pressing this key has the same effect as simultaneously pressing the <Ctrl> and <+> key on the keypad. <S2> Special key: Pressing this key has the same effect as simultaneously pressing the <Ctrl> and <-> key on the keypad.

8.3.6. Escape key, enter key and scroll keys

	<Esc> key <Enter> key, also called the <Return> key
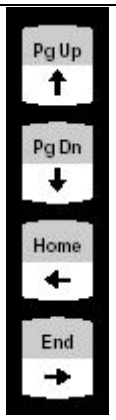	↑/PgUp “Cursor Up” or “Page Up” when pressing the <Shift> key ↓/PgDn “Cursor Down” or “PageDown” when pressing the <Shift> key ←/Home “Cursor Left” or all the way left on that line when pressing the <Shift> key →/End “Cursor Right” or all the way right on that line when pressing the <Shift> key

8.4. Operating states

The following operating states are possible for the DLoG MPC 6:

Status of internal LEDs		DLoG MPC 6 status
Power (green)	Temp (red)	
OFF	OFF	Initial state, idle time - waiting for a new ignition signal after switch off; no power supply
OFF	FLASHING	Temperature sensor malfunctioning
OFF	ON	Heating is on at temperatures < 0 °C, or overheating warning at temperatures > 62 °C. The computer will not start until the temperature inside the unit is between 0 and 62 °C again.
ON	OFF	Computer is starting up; normal operational state; shutdown delay time is running
ON	ON	Temp. < -25°C or Temp. > 70°C
ON	FLASHING	Temperature sensor malfunctioning; automatic shutdown software configuration

9. Operating system

9.1. Pre-installed on the hard drive/Compact Flash

When a DLoG MPC 6 with a pre-installed operating system is started, this operating system is loaded following the BIOS boot messages.

System-specific device drivers – such as those for display, audio and network adapters, and touch screens – are also pre-installed.

Refer to the relevant operating system manual for specific operating instructions.

In DLoG MPC 6 units with a pre-installed operating system, the system is located on the C partition. The size of this partition will not always be the same as the size of the entire hard drive/Compact Flash. It is up to you to organize the usage of the remaining hard drive/Compact Flash capacity.

With Windows XP Embedded a small EWF partition (Enhanced Write Filter), which is required for the EWF functions.

9.2. Installing on the hard drive/Compact Flash

When a DLoG MPC 6 is started up for the first time without a pre-installed operating system, the user needs to carry out a number of steps that will vary depending on the system to be installed. Refer to the relevant operating system manual for specific instructions.

> The installation and configuration of the operating system should only be carried out by professionals familiar with the system environment.

9.2.1. Operating systems supplied on CD-ROM

There are two ways to install operating systems which are supplied on CD-ROM:

- Using an external CD-ROM drive connected to a USB port. This drive can be used to install, for example, Windows XP/SP1 and SUSE Linux 10.1.
- Initialize the hard drive/Compact Flash using a bootable floppy disk and then copying the operating system CD and driver CD contents onto the hard drive/Compact Flash using the right network/CD drivers. The operating system can then be installed directly from the hard drive/Compact Flash.

> The installation CD must include Service Pack 1 or higher if Windows XP is to be installed via a USB-connected CD-ROM. Service Pack 1 is included with all current installation CDs from DLoG.

9.2.2. Operating system images

If you have created an image of a master installer, there are many ways to copy it to another computer:

From CD-ROM	For installation via USB CD-ROM a bootable image CD must be available The operating system image can then simply be installed from the USB-connected CD-ROM drive.
Via Memory stick	For installation via a USB memory stick a bootable memory stick with an image must be available. The operating system can then be installed from the memory stick.
Via the network	When installing via a network, you need to have an external USB floppy disk drive and a bootable disk with the right network driver. The operating system image can then be installed from the network server.

9.2.3. Operating systems on floppy disk

Operating systems supplied on floppy disk can be installed from an external USB floppy disk drive.

There are three ways to install additional system-specific device drivers such as those for display and network adapters or touch screen:

- If the DLoG MPC 6 only contains a floppy disk drive, the device drivers need to be copied from the IPC/HPC/MPC Drivers CD-ROM to the floppy disk.
- If a CD-ROM drive is available for the USB connection on the DLoG MPC 6 it is possible to install from the IPC/HPC/MPC Drivers CD-ROM.
- If a network connection is available, copy the IPC/HPC/MPC Drivers CD-ROM to the network server and install the device drivers from there.

9.3. Special features of the operating systems

Always observe the documentation provided by the operating system's manufacturer when using a custom operating system. Additional aspects to be observed for specific hardware/software combinations are described below.

9.3.1. MS-DOS

MS-DOS is not a Plug and Play operating system. The system resources need to be managed by the user.

9.3.2. Windows XP Embedded

If the DLoG MPC 6 is running Windows XP Embedded, not all USB devices will be supported.

9.3.3. Linux

Linux is an operating system that is gaining more and more ground in the industrial environment due to its stability and open access to the source code.

The DLoG MPC 6 was successfully tested with the SUSE distribution version 10.1 and Fedora Core 5 Most likely, other distributions will also be compatible.

Most of the peripheral equipment for the DLoG MPC 6 is supported in Linux by default. For the DLoG MPC 6 analog touch controller, the drivers are included on the IPC/HPC/MPC Drivers CD, or they can also be obtained from your DLoG sales agent.

10. Software applications

10.1. Displaying the configuration of the DLoG MPC 6

The program DSYSINFO, which is started from DOS shows the configuration of the DLoG MPC 6.

It was designed for use under DOS and does not work under Windows XP.

Launching DSYSINFO.EXE generates the following messages:

```
DSYSINFO V3.60 DLoG PC System Info
Copyright (C) 1992-2003 by DLoG GmbH

Date                    : 13-SEP-06 13:40:07.20
Operating System, Vers  : MS-DOS, DOS 7.10
CPU, Math Coprocessor   : 486 or higher, 80387
Installed Memory        : 64MB
Size of fixed disk 0,1  : 122MB, 1MB
DLoG PC model           : MPC 6
DLoG Serial Number      : 290002200000H
DLoG BIOS Version       : M6I00C00
Chipset                 : Intel 915
```

10.2. Fine tuning the operating system parameters

The free program TweakUI from Microsoft® is used to fine-tune the Windows user interface. Operating parameters that are otherwise inaccessible can be changed with this program.

For example, an automatic log-on can be set up with a username and password. Please refer to the help file for further details.

TweakUI has been designed exclusively to be used with Microsoft Windows operating systems. Specific functional limitations of the program are listed in the TweakUI help file.

10.3. Environment controller settings

The program MPCCOM has been developed for use in DOS. It does not work under Windows XP or any other Windows operating system.

The MPCCOM program is started from DOS.

Using different parameters you can adjust the following settings:

- Display the current version of your environment controller software as well as statistical, configuration and control functions (temperature, ignition and so on).
- Change the shutdown and delay time.
- Change the reaction time of the power button on the unit's front panel.
- Set how the front panel power button is to be interpreted.
- Set whether the DLoG MPC 6 is to constantly monitor the ignition signal during operation.

Operation

Launching `MPPCOM.EXE -h` generates the following messages:

```
MPCCOM -d time0    set power-key time
                   (time0=time to wait before keypress is
                   recognized in 100ms
                   valid values [1..255])
MPCCOM -h          show this help
MPCCOM -info, -i   readout a lot of info stored in EEPROM
MPCCOM -p value    set power-key mode
                   (0=power-key completely disabled
                   1=wait for the power-key to startup &
                   use the power-key to switch off the
                   device
                   2=ignore the power-key at startup & use
                   the power-key to switch off the device
                   3=wait for the power-key to startup &
                   ignore the power-key on the working
                   device
MPCCOM -t time1 time2 ...set timer values in sec
                         (valid values [1..65535])
                         (time1 = delay time,
                          time2 = switchoff time)
```

```
MPCCOM -x value       .. .set ignition monitoring
                          when device is working
                         (0=use ignition for automatic
                                switch-off
                          1=ignore ignition if device
                          is working)
MPCCOM -kb value       ...disable backlight key
                         (0=no, 1=yes)
MPCCOM -kl value       ...disable "+" & "-" keys
                         (0=no, 1=yes)
MPCCOM -kp value       ...disable power key
                         (0=no, 1=yes)
MPCCOM -ks value       ...disable shift key
                         (0=no, 1=yes)
```

Statistical information, for example, is generated by calling: `MPCCOM.EXE -i`

```
PIC-Version:  3.00                      MPCCOM-Version:        :       1.7
Last Update: 01.01.2003                 Actual Temperature     :      26øC
Working hour backlight : 103h 30min or  4d,  7h and 30min
Working hour device    : 103h 30min or  4d,  7h and 40min
Delay time             :      900s      Switchoff time         :      180s
Brightness value       :         0      Switchoff automatic    :       yes
Brightness control     :       yes      Heating automatic      :        no
BKL off while on Accu  :        no      Accu option            :        no
Use delay while on Accu:        no      Shift key state saved  :        no
Backlight key off      :        no      "+" & "-" keys off     :        no
Power key off          :        no      Shift key off          :        no
Act. brightness saved  :        no      Use switchoff auto     :       yes
Wait for powerkey      :        no      Wait for ignition      :       yes
Switch-on device count :        70      Powerkey-time          :      2.0s
Switch backlight-volt  :        78      Switch-on/off bkl-sw   :         1
Powerkey sw-on count   :         1      Powerkey sw-off count  :         0
Ignition sw-on count   :        26      Switch-off auto count  :         0
PS-ON switch-off count :         0      Temp-sensor error count:         0
Overtemp sw-off count  :         0      Lowtemp sw-off count   :         0
Heating active startup :         0      Heating active working :         1
Startup temp -> min    :      23øC      Startup temp -> max    :      49øC
Working temp -> min    :      23øC      Working temp -> max    :      49øC
Actual shutdown reason :   unknown      Last shutdown reason   :   unknown
```

11. Serial ports

By default the DLoG MPC 6 is equipped with 4 serial ports. COM1 and COM2 are accessible from the outside, COM3 and COM4 are used internally for communication with the environment controller and the touch controller.

11.1. Resources

Resources for the serial ports are pre-defined in the system architecture and automatically managed by the BIOS. The resources for COM1, COM2, COM3 and COM4 can be defined via the BIOS.

The standard resources for serial ports are:

COM1	Address 0x3F8 - 0x3FF (hexadecimal), Interrupt IRQ4
COM2	Address 0x2F8 - 0x2FF (hexadecimal), Interrupt IRQ3
COM3	Address 0x3E8 - 0x3EF (hexadecimal), Interrupt IRQ10
COM4	Address 0x2E8 - 0x2EF (hexadecimal), Interrupt IRQ11

11.2. COM1 options

The following section describes what needs to be observed when using the COM1 port to supply power to external equipment.

The resources required for the COM1 controller module are automatically reserved by the BIOS.

11.3. COM1 as a power supply

The COM1 port can optionally supply externally connected equipment with +12 V or +5 V of power. The voltages are protected by internal fuses which limit the total consumed current to 1.1 A at 5 V (including keyboard and mouse). The current consumption at 12 V is also limited to 1.1 A by a reversible fuse. Depending on the specific system configuration, the maximum current consumption at +12 V may be significantly lower.

11.4. COM2 options

This section describes what needs to be observed when the COM2 options RS-422 and RS-485 are used.

The resources required for the COM2 controller module are automatically reserved by the BIOS.

11.5. COM2 as electrically-isolated RS-422/485

An electrically-isolated RS-422/485 port is optionally available for the COM2 of the DLoG MPC 6. This option provides increased data transfer reliability in environments with a lot of interference and extreme differences in ground potential.

This function requires special adapter cables. This can be ordered from your DLoG sales agent.

11.6. Drivers

11.6.1. RS-232 operation

MS-DOS only supports 4 serial ports.

The application is responsible for the use of more COM ports.

Other operating systems support more serial ports.

11.6.2. RS-4xx operation

This operating mode is not supported by any of the available operating systems.

Applications need to provide their own routines for this mode.

11.7. Serial port printers

Printers with a serial port can be connected to the DLoG MPC 6.

11.8. Serial port barcode scanners

To activate the integrated scanner software wedge under Windows XP Embedded:

1. Open the Start menu and navigate to Settings | Control Panel | Accessibility.
2. Select the General tab.
3. Select Support accessibility options.
4. Click Settings.
5. Configure the desired COM port and BAUD rate.
6. Confirm the change with OK.
7. Click OK again for the changes to take effect.

Please note that you have to configure the scanner correctly to RS-232 and the above set BAUD rate following the scanner manufacturer's guidelines. Otherwise the software wedge will not function properly.

11.8.1. Tips & tricks

Note that according to the EIA-232-E specification, the maximum cable length is 15 m at 19,200 bps.

By using a correctly terminated twisted-pair cable, however, up to 1,200 m at 100 kbps can be achieved according to the EIA-422-A specification. With a data rate of 1 Mbps and a high-quality cable, it is possible to reach cable lengths of up to approximately 400 m.

Malfunctions in the RS-232 connections are frequently caused by ground loops. If both end devices establish a ground connection via RS-232 but do not share the same ground potential in their power supply circuits, then compensation currents may result. This is particularly noticeable with long cables.

These compensation currents, which are also present at the ground point of the RS-232 connection, may significantly degrade signal quality and effectively stop the data flow. In challenging environments, electrically-isolated connections (via external converters) or differential systems (RS-422/485 port) are strongly recommended.

12. Internal devices

12.1. Chipset

The DLoG MPC 6 computer is equipped with a chipset which controls the communication between all function modules.

The chipset converts the signals it receives from the CPU into memory access, hard drive access and other similar actions. Likewise, it transmits requests from peripheral devices to the CPU. Input devices such as the mouse or keyboard also communicate with the system via this chipset.

Resources

The chipset does not require any resources for its core functions – unlike the internal peripheral units, which are also described in this manual.

12.1.1. Installing chipset drivers under MS-DOS

No drivers are required for MS-DOS operation.

12.1.2. Installing chipset drivers under Windows XP

Install the chipset drivers **before** all other drivers, otherwise the system will not function properly!

The chipset drivers to be used can by default be found on the Compact Flash or hard drive under **Util/chipset/<verNR>**.

In addition you will find the DLoG drivers on the included driver CD or on the Internet under www.dlog.com.

Proceed as follows to install the chipset driver:

1. Open the corresponding folder and run Setup.exe.

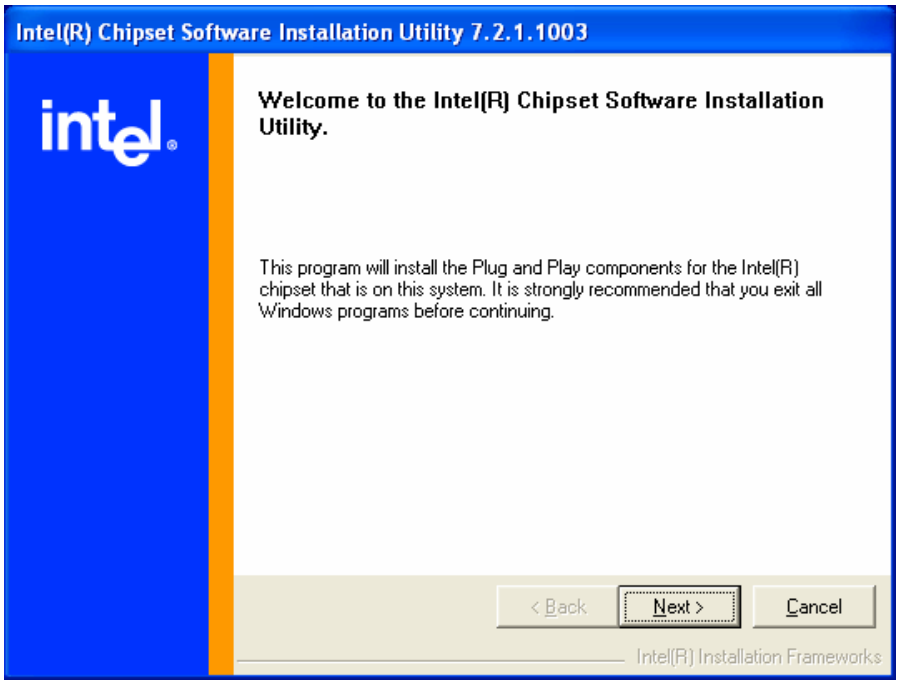

Figure 12.1: Welcome screen for chipset driver installation

3. Click Next.
4. In the following window click Yes.
5. Click Next again.
6. Then restart your computer.

12.2. VGA adapter

The DLoG MPC 6 is equipped with a VGA-compatible adapter. This adapter controls the integrated display.

The VGA adapter generates all the control signals required for the integrated displays.

Resources

The VGA adapter is a Plug and Play component for the PCI bus. All resource allocation and management is therefore performed by the BIOS.

12.2.1. VGA driver installation under MS-DOS

No drivers are required for MS-DOS operation.

12.2.2. VGA driver installation under Windows XP

The graphic card driver to be used can be found by default on the Compact Flash or hard drive under Util/vga/<verNR>.

In addition you will find the DLoG drivers on the included driver CD or on the Internet under www.dlog.com.

Proceed as follows to install the VGA driver:

1. Open the corresponding folder and run Setup.exe.

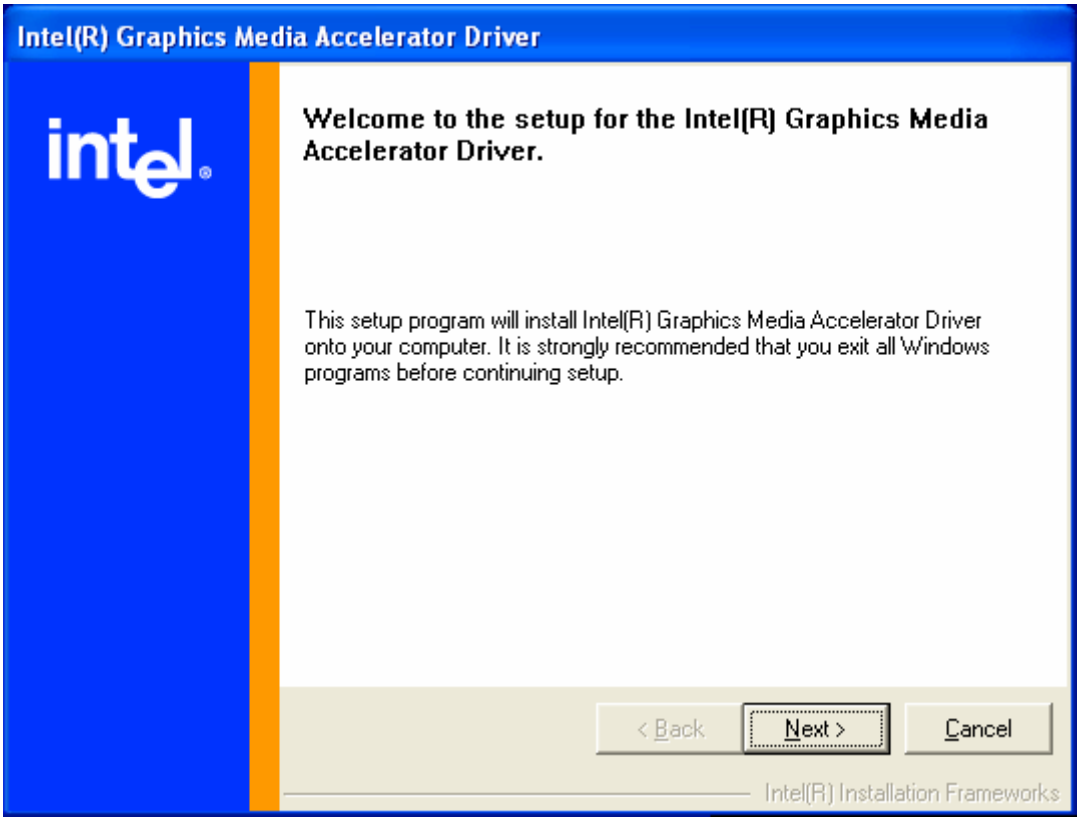

Figure 12.2: Welcome screen for the VGA driver installation

2. Click Next.
3. In the following window click Yes.
4. Now restart your computer.

12.3. Network adapter (10/100)

The DLoG MPC 6 is equipped with a 10/100 Mbit network adapter.

This adapter is available on the back of the device and features an RJ45 port

The network controller undertakes the entire task of connecting the hardware to the network.

The RJ45 connection port features two integrated status LEDs. They display the following messages:

Left LED (green)

LED off: not connected, no activity

LED on: connected, no activity

LED flashes: connected, activity

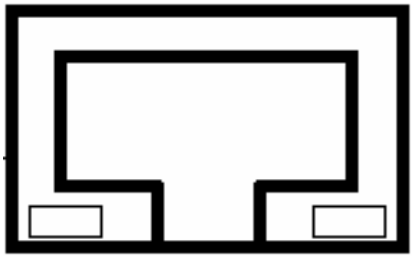

RJ45 network port

Right LED (orange):

LED off: 10 Mbit network

LED on: 100 Mbit network

Figure 12.3: RJ45 network port

Resources

The network adapter is a true Plug and Play component. All resource allocation and management is therefore performed by the BIOS.

12.3.1. Network driver installation under MS-DOS

Follow the instructions provided in the ReadMe file on the master installation CD.

12.3.2. Network driver installation under Windows XP

The network drivers to be used can be found by default on the Compact Flash or hard drive under Util/Lan/<verNR>.

In addition you will find the DLoG drivers on the included driver CD or on the Internet under www.dlog.com.

Proceed as follows to install the network drivers:

1. Open the corresponding folder and run Setup.exe.

Figure 12.4: Network driver installation license agreement

2. Select the menu option I accept the terms in the license agreement and click Next.
   In the following window click Next.

Figure 12.5: Start screen for network driver installation

3. Now click Install Drivers.
4. After the installation click Exit.
5. Next, the computer needs to be restarted:

12.4. Onboard sound adapter

The DLoG MPC 6 is equipped with an onboard sound adapter. Normally this adapter is not directed to the outside.

Resources

The onboard sound adapter is a true Plug and Play component. All resource allocation and management is therefore performed by the BIOS.

12.4.1. Installation of the onboard sound adapter drivers (Win XP)

The sound card drivers to be used can be found by default on the Compact Flash or hard drive under Util/Sound/<verNR>. In addition you will find the DLoG drivers on the included driver CD or on the Internet under www.dlog.com.

Proceed as follows to install the onboard sound adapter drivers:

1. Open the corresponding folder and run Setup.exe.

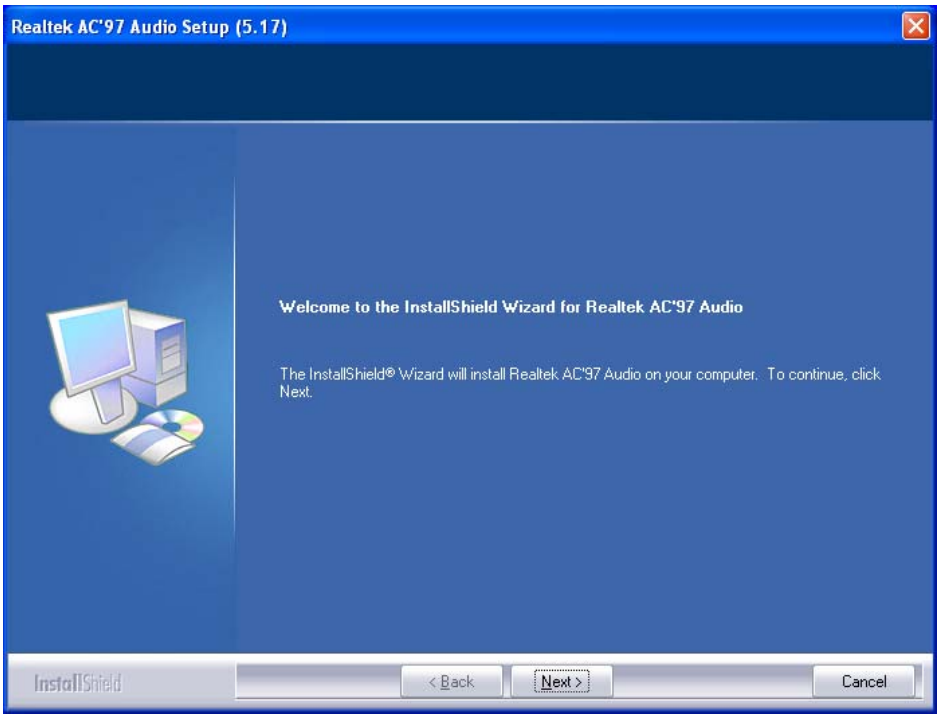

Figure 12.6: Welcome screen for the onboard sound adapter drivers

2. Click Next.

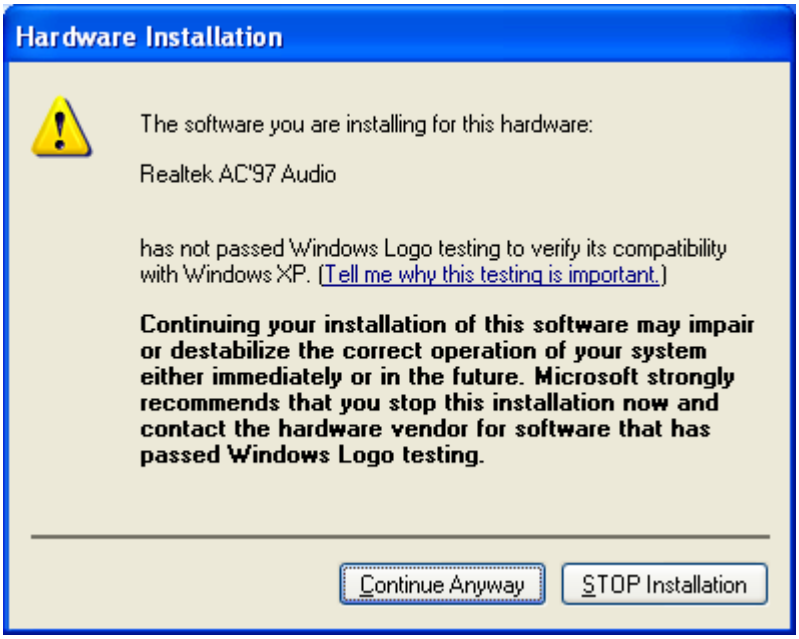

Figure 12.7: Warning message for the onboard sound adapter drivers

3. In the following window click Continue Anyway.
4. Now restart your computer.

12.5. Touch screen

An optional resistive touch screen is available for the DLoG MPC 6.

The touch screen can be operated with or without a keyboard and is compatible with a mouse.

If the touch controller is configured as PS/2 touch (via jumpers) a mouse cannot be connected to the external PS/2 mouse.

Of course it is always possible to use a serial or a USB mouse at the same time as the touch screen.

Explanation of functions

A touch screen controller for resistive touch screens is integrated into the motherboard to analyze the sensor line state changes caused by touching. The touch screen controller calculates and formats this data and then sends it to the touch screen software driver via the COM4 port or optionally the mouse-PS/2 port (interrupt-controlled). The driver converts the data into pointer commands.

The analog touch screen controller used for analysis provides a resolution of 4096 x 4096 pixels (12-bit horizontal and vertical).

4-wire touch screen (10.4" front panel) and also 8-wire touch screens (12.1” front panel) are supported.

Resources

By default the resources for the touch screen controller are the same as for the COM4 port. If the appropriate configuration exists, these may also be the same as for the PS/2 mouse. With the exception of ensuring that the jumpers are set correctly J6 (open = Touch active) and J13 (closed=PS/2, open=COM4), no further configuration is required.

12.5.1. MS-DOS installation and calibration for driver version 5.06

Installation

The directory C:\hammouse must be used in order for the driver to be able to locate the calibration data.

Install the Hampshire touch screen driver after installing MS-DOS and verifying that the installed system is fully functional.

Follow the instructions below to install the Hampshire touch screen driver under MS-DOS:

1. Create the directory C:\HAMMOUSE. This directory name must not be modified.
2. Copy the DOS files for the touch screen into this directory. These DOS files can be found in the directory C:\Util on the hard drive/Compact Flash of the DLoG MPC 6 or on the driver CD-ROM.
3. Enter the following command line in the batch file Autoexec.bat (for example, using <EDIT>):
   Serial touch: `C:\HAMMOUSE\HMOUSE /B9600 /C4 /I11 /hY`
   - PS/2 touch: `C:\HAMMOUSE\HMOUSE /p /T12 /hY`
4. Restart the computer.

Calling parameters:

You can also enter the following calling parameters:

/r : Uninstall the driver

/? : Help page

MS-DOS calibration

The calibration of the touch screen is carried out with the program HDOSCALB.EXE.

Example:

1. Open the directory C:\HAMMOUSE.
2. Enter HDOSCAL.

You can also enter the following calling parameters:

/Tx : Touch Mode

/TS – Stream
/TU – Pen-UP
/TD – Pen-Down

/Sx : Touch Sound

/SN – Sound ON
/SF – Sound OFF

/Cxx: Cal Mode

/C3 – 3 point
/C4 – 4 point
/C20 – 20 point

/V: Video Mode

/VTEXT – Calibrate Text mode
/V640x200 – Calibrate 640x200 mode
/V640x350 – Calibrate 640x350 mode
/V640x480 – Calibrate 640x480 mode
/V800x600 – Calibrate 800x600 mode
/V1024x768 – Calibrate 1024x768
/Vcustom – Calibrate custom mode

12.6. Touch (Serial) for Windows XP Prof. and XP Embedded

12.6.1. Installation

The touch drivers to be used can, by default, be found on the Compact Flash or hard drive under Util/atouch/<verNR>.

In addition you will find the DLoG drivers on the included driver CD or on the Internet under www.dlog.com.

1. Open the corresponding folder and run Setup.exe.
2. On the Welcome dialog click Next.
3. In the Software License Agreement window select I accept all of the terms of the above License Agreement and then click Next.
4. On the Select Controller dialog choose serial (RS/232) and click Next.
5. On the Serial Configuration dialog choose COM4 and 9600 Baud and click Next.
6. Deselect the option on the Configuration Complete dialog and close by clicking Finish.
7. Two Files Needed windows will appear querying the path to the tsufiltr.sys file.

8. Select Browse to navigate to the installation folder indicated above, then choose the Serial folder and click OK.

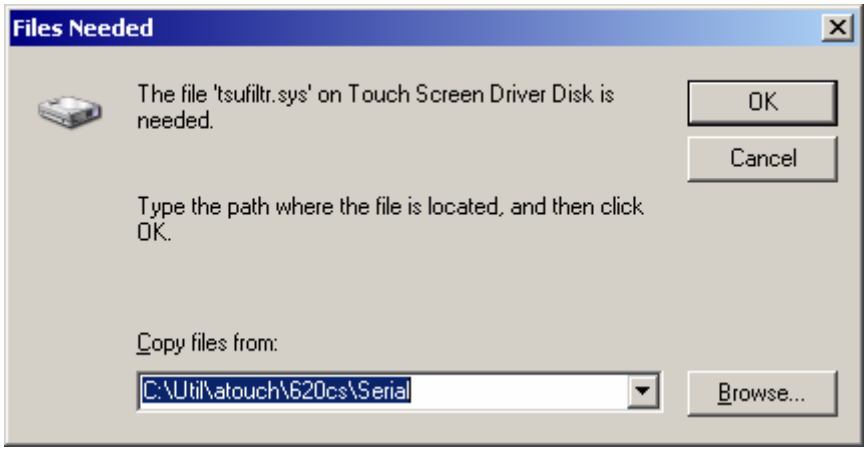

Figure 12.8: “Files Needed” touch installation dialog

9. Confirm the final message Setup is now complete by clicking OK. The computer does not need to be restarted.

12.6.2. Calibration

The touch screen must be calibrated so that it functions correctly.

1. Start the touch configuration tool under Start/Programs/Hampshire TSHARC Control Panel.
2. Select the Calibration tab and click the Touch field.
3. Once calibration is complete, finish by clicking Accept.
4. Select the Click Settings tab and select Enable right click emulation and enter the following values:
   Right-Click Area + Double-Click Area each to 13;
   Right-Click Delay + Double-Click Delay each to the third line.
5. Exit the tool with OK.

12.7. Touch (PS2) for Windows XP Prof. and XP Embedded

12.7.1. Installation

The touch drivers to be used can, by default, be found on the Compact Flash or hard drive under Util/atouch/<verNR>.

In addition you will find our drivers on the included driver CD or on the Internet under www.dlog.com.

1. Open the corresponding folder and run Setup.exe.
2. On the Welcome dialog click Next.
3. In the Software License Agreement window select I accept all of the terms of the above License Agreement and then click Next.
4. On the Select Controller dialog select PS/2 and click Next.
5. Deselect the option in the Configuration Complete dialog and end by clicking Finish.
6. In the following window confirm the dialog by clicking OK.

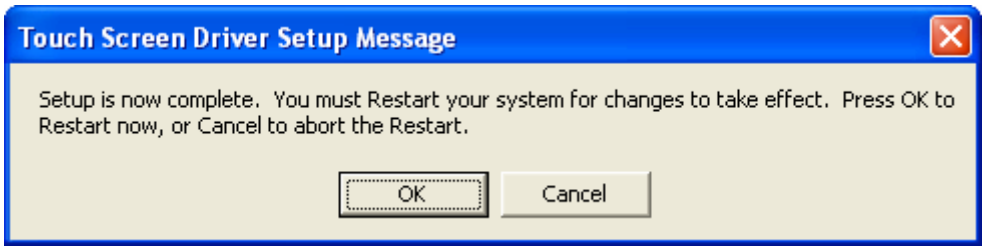

Figure 12.9: “Setup Message” touch installation dialog

7. Next, the computer needs to be restarted.

12.7.2. Calibration

The touch must be calibrated so that it functions correctly.

1. Start the touch configuration tool under Start/Programs/Hampshire TSHARC Control Panel.
2. Select the Calibration tab and click the Touch field.
3. Once calibration is complete, finish by clicking Accept.
4. Select the Click Settings tab and select Enable right click emulation and enter the following values:
   Right-Click Area + Double-Click Area each to 13;
   Right-Click Delay + Double-Click Delay each to the third line.
5. Exit the tool with OK.

12.8. Resistance of the touch screen

Resistance to chemical substances

The transparent coating of the DLoG touch screen's surface is resistant to most chemical substances that are normally used at home or in the industrial sector.

As the majority of chemicals react more intensely at higher temperatures, the screen has been designed for normal room temperatures as well as extreme operating temperatures.

The data listed here applies exclusively to DLoG's resistive touch screens.

Household chemicals Reaction time: 24 hours	Visible effect at 29°C, 90% relative humidity (RH)	Visible effect at 50°C, dry
Coffee	none	none
Ketchup	none	none
Cleaning agents (liquid)	none	none
Milk	none	none
Mustard	none	slight yellow stain
Strong tea	none	none
Vinegar	none	none

Solvents/ Industrial chemicals	Visible effect at 29°C, 90% relative humidity (RH)	Visible effect at 50°C, dry
Acetic acid	none	none
Acetone/MEK, 50/50	none	none
Brake fluid	none	none
Butyl acetate	none	none
Cellosolve acetate	none	none
Ethanol/isopropanol, 50/50	none	none
Gasoline	none	none
Concentrated sulfuric acid	none	none
Petrol-based oil	none	none
Mineral oil	none	none
40% sodium hydroxide	none	Slight corrosion
111 trichlorethane	none	none
Turpentine	none	none
Vm & P Naphtha	none	none

Pencil hardness test ASTM D 3363.74

The resistive DLoG touch screens have a hardness ≥ 4H.

Test scale (from softest to hardest): 6B, 5B, 4B, 3B, 2B, B, HB, F, H, 2H, 3H, 4H, 5H, 6H, 7H, 8H, 9H

Adhesion

Test scale: 0B=100% delamination, 5B=no delamination

12.9. Plug-in cards

A so-called riser card with a single bus master-capable PCI slot is available for the DLoG MPC 6. This card allows you to upgrade your system with conventional ultra-short expansion cards (max. length: 141 mm).

Before extending the module, make sure that you read the *important safety notices* at the start of this manual.

The slot bracket on the connector bay needs to be removed and replaced by the expansion card's slot bracket.

The riser card routes the onboard PCI bus signals from the P22 of the motherboard to a standard plug-in slot.

Resources

The riser card itself does not require any system resources. You need to be familiar with the plug-in card's resource requirements to avoid conflicts with standard system resources.

Even in worst-case operating scenarios, the power consumption of all added plug-in cards must not exceed 20 W.

Remember to also take into account the power requirements of external peripheral equipment (keyboard, mouse, scanner etc.)!

Installation

The plug-in card is fastened to the slot bay at the back of the unit by its slot bracket.

12.9.1. Riser card with 1x PCI

This riser card provides a master-capable PCI slot for PCI Ver. 2.1.

Component heights are permitted up to 12 mm. Otherwise, refer to the PCI specifications for maximum component heights.

The maximum length of the plug-in card must not exceed 141 mm.

Drivers

The riser card is fully transparent for all operating systems, i.e. no drivers are required.

Some plug-in cards which are inserted into riser cards may require additional drivers. These drivers need to be supplied by the respective card manufacturers.

12.9.2. TerraTec 128i PCI sound card

Follow the manual supplied with the sound card.

12.9.3. CAN card

Follow the manual supplied with the CAN card.

12.10. Automatic switch-off and heating

DLoG MPC 6 models with DC voltage can optionally be equipped with either an automatic shutdown module or an automatic shutdown and heating module.

If the heating option is implemented, the DLoG MPC 6 can be operated at temperatures ranging from maximum -30 C to +50 C.

Modes of operation

If wired up accordingly, the DLoG MPC 6 conveniently switches off together with the vehicle's ignition. As disconnecting the power supply during operation can lead to data loss, the operating system needs to be shut down normally using the appropriate hardware and software installed on the system when the ignition is switched off.

The DLoG MPC 6 is connected to the vehicle with three supply cables. DC+ und DC- are directly connected to the power supply of the vehicle, the connection is of course run through fuses (see section *7.5.2 DC power pack*) Therefore make sure that the cables are connected directly to the battery and not to high-interference supply lines (for example, motor supply) or to supply lines already used by other consumers.

The supply voltage connected is then linked to the DLoG MPC 6's ignition input via a switch, for example, the key switch of the ignition (also with a fuse, see section *7.5.2 DC power pack*).

Heating is required if you want to operate the DLoG MPC 6 at ambient temperatures below 0°C.

In the following two sections, the main functions of the automatic heating and shutdown modules are described. For detailed information on the automatic shutdown and heating modules – complete with pre-defined thresholds – refer to the program flowchart diagrams (part 1 and 2) below.

Resources

The automatic switch-off/heating module requires the COM3 port for configuration. In normal use the LPT1 port is used for communication.

12.10.1. Automatic shutdown process

When the ignition is switched on, the DLoG MPC 6 is supplied with power and begins checking its internal temperature and automatic shutdown function.

Once the ambient conditions have been verified as acceptable, the DLoG MPC 6 starts the operating system just like normal.

During the first three minutes of the start-up phase, none of the ambient conditions, such as the internal temperature or the *Ignition* input status, are checked. This allows the operating system and the operating software for the automatic shutdown module to fully load without interruption. Following this three-minute period, the internal temperature of the unit and the status of the *Ignition* input are checked continuously. If the inner temperature of the DLoG MPC 6 reaches a critical range, the operating system is shut down normally and the computer remains switched off until the temperature is back in the permitted range.

If the *Ignition* input is switched to earth potential or a potential-free source during normal operation, the unit switches to shutdown delay time. In this state, the device continues to operate normally until the delay time (for example, 15 minutes) has elapsed.

- If the ignition is triggered again during this time, the DLoG MPC 6 resumes normal operation.
- If, however, the delay time elapses, the operating system is shut down normally by the DLoG operating software and the unit is automatically switched off (for example, after three minutes, or after a signal from the operating software).

12.10.2. Program flowchart

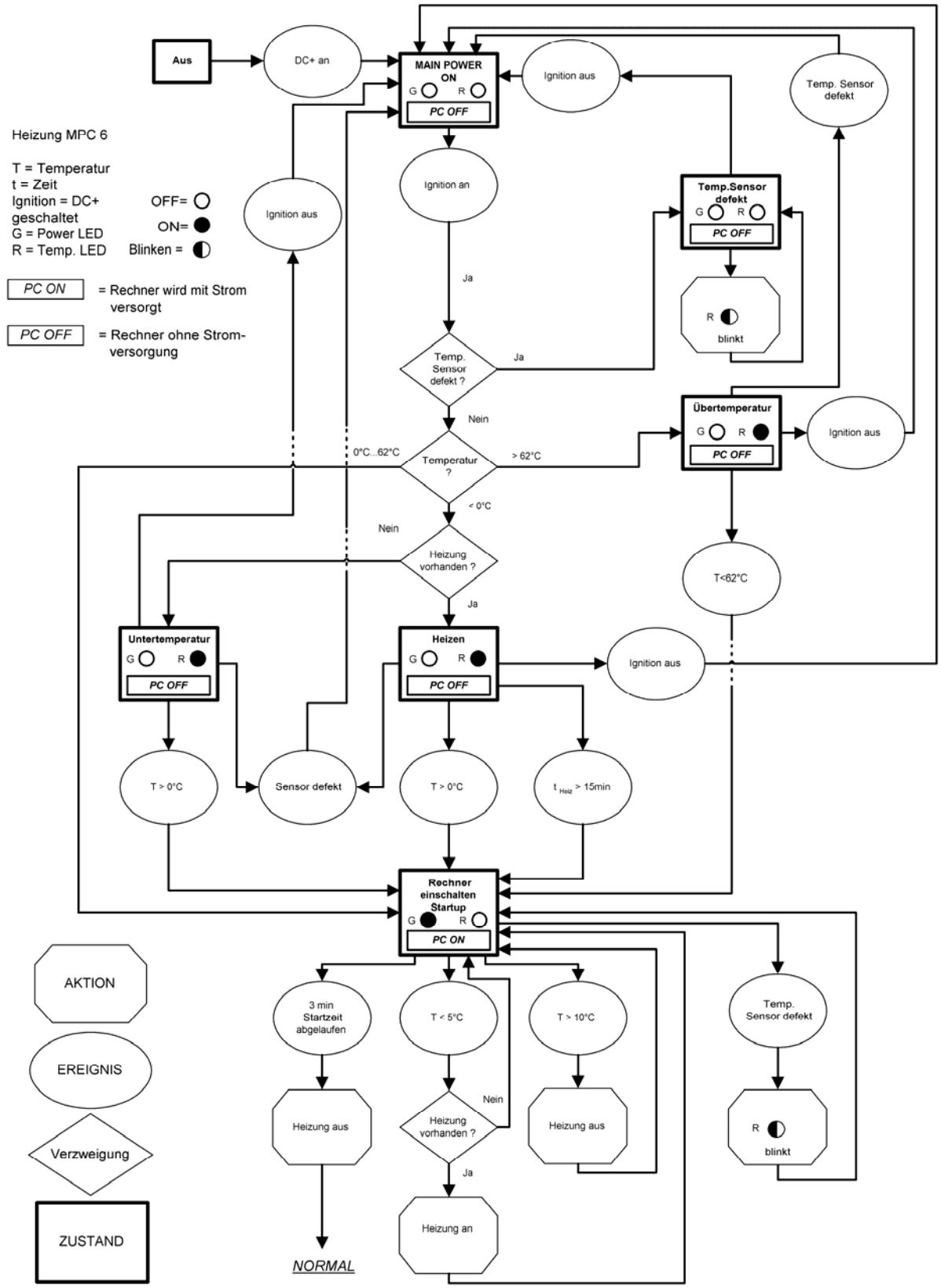

Figure 12.10: Automatic shutdown program flowchart part 1

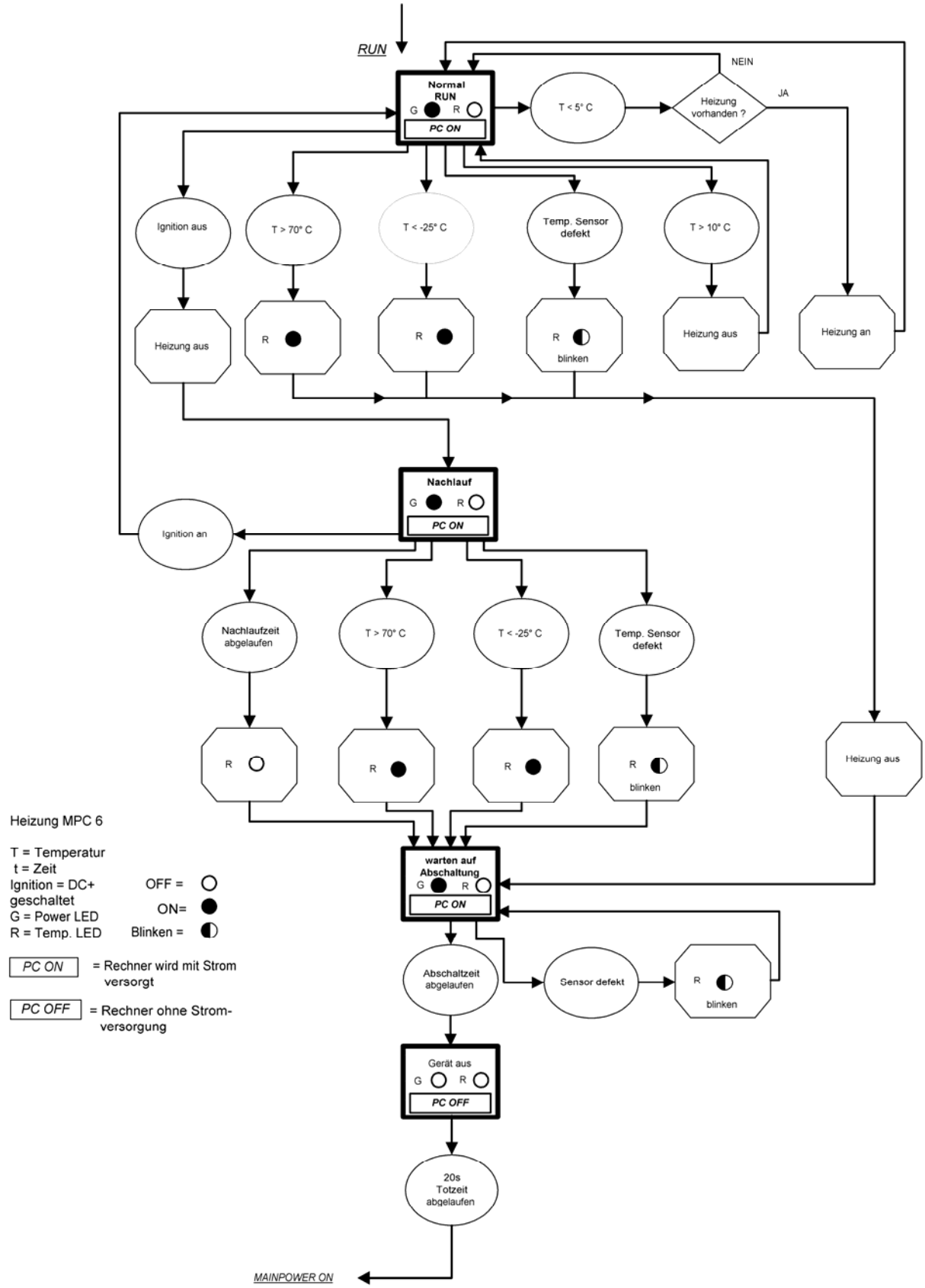

Figure 12.11: Automatic shutdown program flowchart part 2

12.10.3. Drivers

DLoGPwrw.sys driver V1.0 for Windows XP

Standard setting: I/O port 0x379, length 2 Bytes

The DLoG MPC 6 and the automatic shutdown module communicate via the DLoG motherboard control port, which consists of the two I/O ports described above.

Parameter settings in the registry

Using the Registry Editor REGEDIT.EXE, supplied with Windows, the parameters of the DLoG port driver can be configured via the following path:

`HKEY_LOCAL_MACHINE\SYSTEM\CurrentControlSet\Services\dlogpwr\parameters\0`

Key name	Key type	Value of key
IpcType	REG_DWORD	0: The computer type is automatically detected 8: The PC is a DLoG IPC 6 9: The PC is a DLoG MPC 6 Default: 9

12.10.4. General notes about the automatic shutdown software in Windows

The DLoG Config program must be installed for the automatic shutdown module to function correctly.

If the DLoG Config has not been started, the DLoG MPC 6 will carry out a hard shutdown once the delay time and shutdown time set by the hardware (e.g. via MPCCOM.EXE) has elapsed. In this case, the operating system is not shut down normally before the power is switched off. The current application is unable to save its data, and the file system becomes increasingly unstable and inconsistent.

If the DLoG Config has been started, the program can recognize when the operating system needs to be shut down. Firstly, the Windows message "WM_QUERYENDSESSION" is sent to all running applications to inform them of the impending shutdown.

Now every application has to respond within the time that is set in the registry (see the DLoG Config manual). If a response is not sent in the specified time, the application is forced to quit.

If there are any open programs with unsaved changes, it may not be possible to automatically quit them (for example, an unsaved document in WORDPAD.EXE, a program supplied with Windows). In this case WORDPAD.EXE responds to the Windows message "WM_QUERYENDSESSION" with a user query to confirm if the current file is to be saved. Applications that can be quit with the key combination "ALT" and "F4" (that is, without a final user query) generally send the required response to the "WM_QUERYENDSESSION" message and are not shutdown "hard".

To ensure that vital data is always saved correctly, applications need to be able to properly respond to the "WM_QUERYENDSESSION" message, that is, without user queries and within the set time period.

Further information to the DLoG Config program can be found in the corresponding manual.

13. Maintenance

13.1. Cleaning the housing

The housing of the DLoG MPC 6 is best cleaned with a damp cloth.

Do not use compressed air, a high-pressure cleaner or vacuum cleaner, as this can damage the surface.

Using a high-pressure cleaner poses the additional risk of water entering the device and damaging the electronics or display.

13.2. Touch screen cleaning

The touch screen's surface should always be kept clean of dirt, dust, fingerprints etc. to ensure full display visibility. Abrasive cleaning agents may scratch the surface and lead to a deterioration in image quality .

The best results are obtained using a damp, non-abrasive cloth with any commercially-available window cleaner that does not contain ammonia. Apply the window cleaner to the cloth instead of spraying it directly onto the touch screen surface.

Do not use sulfurous agents.

14. Common mistakes in usage

14.1. Power supply

An integrated, electrically isolated AC/DC power supply is available for the DLoG MPC 6.

- Do not connect DLoG MPC 6 devices that have a DC power pack to an AC/DC power supply!
- Do not connect DLoG MPC 6 devices that have an AC/DC power pack to a DC power supply!

14.2. Powering up/down

- Please note that the function of the DLoG MPC 6's power switch varies depending on how the device is configured (depending on the power supply and integrated automatic shutdown).
- Only disconnect the computer from the power supply after the computer has been properly shut down and switched off. Otherwise file errors may occur on the storage device (in operating systems that have no activated write protection filter).

14.3. Cable cover

- The supplied cable cover for the external ports must be installed prior to using the DLoG MPC 6. In order to comply with protection class IP65, please use the optionally available IP65 assembly kit from DLoG.

14.4. Installation

- Only use suitable mounting brackets and screws permitted by DLoG.
- Ensure that ball-and-socket bases and fastening arms are securely attached.
- Follow the instructions carefully when attaching all outgoing cables to the strain relief rail.
- The top cover hood of the wireless card is there to protect the card and should not be used as a handle when turning the terminal.
- All fastening brackets and mounting parts supplied by DLoG are only intended for use in the mounting of terminals and peripheral devices and may not be used for other purposes.
- However, changing conditions during installation may result in operating states where it may be necessary to optimize the mounting process. Carefully follow the *Appendix E: Mechanical dynamic loading.*
- When mounting peripheral devices, follow the manufacturer's instructions. This is particularly important when welding or drilling supporting parts.
- To avoid any accidents, make sure your field of vision is not restricted in any way when mounting peripheral devices. Observe all accident prevention regulations.

14.5. Mobile application on vehicles

- Never connect a 12 VDC device to a 24/48 VDC vehicle!
- Never connect a 24/48 VDC device to a 12 VDC vehicle!
- Never connect a 12/24/48 VDC device to vehicles with more than a 60 VDC voltage.
- Ensure that supply lines are fused correctly.
- Lay the supply cable so that it will not get crushed or frayed.
- Read the labeling on the cable and connect the supply cable with the correct polarity.

- Cut the supply cable as short as possible. This avoids tangled cables and improves the quality of the power supply.
- Observe the vehicle manufacturer's instructions for connecting additional loads, for instance, in conjunction with an emergency shut-off switch.
- Connect the supply cable to a suitable place. Ensure that the connecting cable has an adequate cross section and ampacity at the connection point.

14.6. Using the touch screen

- Please do not use sharp or abrasive objects on the DLoG MPC 6's touch screen.
- Do not use abrasive cleaning agents to clean the front of the device. The best results are obtained using a damp, non-abrasive cloth with any commercially-available window cleaner that does not contain ammonia. Apply the window cleaner to the cloth instead of spraying it directly onto the touch screen surface. Do not use sulfurous agents.

14.7. Use/storage in extreme temperatures

Please observe the DLoG MPC 6's maximum operating and storage temperatures. Make sure you know which type of device is being used:

- With or without heating module
- Which type of display is used

The temperature ranges mainly depend on these two components.

15. Disposal

The DLoG GmbH general terms and conditions set out the obligations for disposal in accordance with official electronics regulations.

16. Appendix A: System resources

16.1. Part 1

The resources listed are reference values only. They may vary depending on the system configuration. These reference values are especially useful as a guide and for troubleshooting.

Component	Interrupt	DMA channel	Setup default	Memory range (Hex.)	I/O range (Hex.)
VGA controller	IRQ 05 per PCI routing	-	PCI/ISA PnP	FE280000	03B0 – 03DF
CardBus controller (Ricoh R5C485)	IRQ 05 per PCI routing	–	PCI/ISA PnP	0F000000 – 0F000FFF	–
PCIe MiniCard slot	IRQ 05 per PCI routing		PCI/ISA PnP		
Network controller (Intel® ICH6M with PHY Intel® 82562)	IRQ 05 per PCI routing	–	PCI/ISA PnP	EE000000 – EE0000FF	C000 – C0FF
Onboard Audio	IRQ 05 per PCI routing	-	PCI/ISA PnP	-	-
1. IDE controller	IRQ 14 per PCI routing	–	PCI/ISA PnP	–	01F0 – 01F7 03F6 – 03F7 C400 – C407
Numeric coprocessor	IRQ 13	–	PCI/ISA PnP	–	00F0 – 00FF
PS/2 Analog Touch (optional)	IRQ 12	–	PCI/ISA PnP	–	0060 – 0060
USB controller	IRQ 05,06,15	–	PCI/ISA PnP	–	C800 – C81F
CMOS/real time clock	IRQ 08	–	–	–	0070 – 0071
LPT1 (only available internally)	IRQ 07	–	PCI/ISA PnP	–	0378 – 037F 0778 – 077A
Floppy disk drive (only available	IRQ 06	2 (8 bit)	PCI/ISA PnP	–	03F2 – 03F5

internally)					
SCI IRQ ACPI bus	IRQ 09	–	PCI/ISA PnP	–	
COM4 (Analog Touch)	IRQ 11	–	legacy ISA	–	02E8 – 02EF
COM3	IRQ 10	–	legacy ISA	–	03E8 – 03EF
COM2	IRQ 03	–	legacy ISA	–	02F8 – 02FF
COM1	IRQ 04	–	legacy ISA	–	03F8 – 03FF
SMBus controller	IRQ 05 per PCI routing		PCI/ISA PnP		0400
Interrupt controller	IRQ 02	–	–	–	0020 – 0021 00A0 – 00A1
Keyboard	IRQ 01	–	–	–	0060 – 0060 0064 – 0064
System timer	IRQ 00	–	–	–	0040 – 0043

16.2. Part 2

List of abbreviations: TOM = Top of memory = max. DRAM installed

Component	Interrupt	DMA channel	Setup default	Memory range (Hex.)	I/O range (Hex.)
Graphic controller	–	–	–	0000C000 – 0000D400 000A0000 – 000AFFFF 000B0000 – 000BFFFF 000C0000 – 000CDFFF E0000000 – E7FFFFFF EC000000 – EC00FFFF ED000000 – ED07FFFF	03B0 – 03BB 03C0 – 03DF
DMA controller	–	4 (16 bit)	–	–	0000 – 000F 0080 – 0090 0094 – 009F 00C0 – 00DF
I/O read for ISA PnP	–	–	–	–	0A00 - 0A0F
PCI bus	–	–	–	–	0CF8 – 0CFF 4000 – 407F 4080 – 40FF 5000 – 500F 6000 – 607F
Motherboard resources	–	–	–	E0000 - FFFFF CC000 - DFFFF A0000 - CBFFF 9FC00 - 9FFFF (TOM-192kB) – TOM (TOM-8MB-192kB) – (TOM-192kB) 1024kB – (TOM-8MB-192kB) E0000000 - EFFFFFFF FED1C000 - FED1FFFF	04D0 – 04D1 0CF8 - 0CFF 0072 - 0075 0480 - 04BF 0800 - 087F 002E - 002F 0000 - 00FF 0100 - 010F
Memory refresh	-	0 (8 bit)	-	-	-
System speaker	–	–	–	–	0061 – 0061

17. Appendix B: Terminal assignment (Pins)

The following chapter lists the pin numbers and the appropriate signals.

The following abbreviations will be used: n.c. = not connected

17.1. External connectors

17.1.1. Keyboard and Mouse

Version: Mini-DIN (PS2), 6-pin, motherboard reference P12

Keyboard only or keyboard and mouse connected via a Y cable

Pin	Signal
1	KBDATA
2	MSDATA
3	GND
4	+5V fused
5	KBCLOCK
6	MSCLOCK

17.1.2. USB

Version: 8-pin, motherboard reference P13

Pin	Signal
1	+5V fused
2	USB0 -
3	USB0 +
4	GND
5	+5V fused
6	USB1 -
7	USB1 +
8	GND

17.1.3. Serial port COM1

Version: D-SUB-D, 9-pin, MALE, motherboard reference P15

Pin	Signal
1	+5V fused
2	USB0 -
3	USB0 +
4	GND
5	+5V fused
6	USB1 -
7	USB1 +
8	GND

17.1.4. Serial port COM2

Version: D-SUB-D, 9-pin, MALE, via adapter cable to motherboard reference P16

RS232 version (standard)

Pin	Signal	Name
1	DCD	Data Carrier Detect
2	RxD	Receive Data
3	TxD	Transmit Data
4	DTR	Data Terminal Ready
5	GND	Signal Ground
6	DSR	Data Set Ready
7	RTS	Request to Send
8	CTS	Clear to Send
9	RI	Ring Indicate

RS422 version (optional)

Pin	Signal	Name
1	Connected to Pin2	
2	Connected to Pin1	
3	RXD–	Receive Data –
4	TXD–	Transmit Data –
5	GND	Signal Ground
6	Connected to Pin7	
7	Connected to Pin6	
8	RXD+	Receive Data +
9	TXD+	Transmit Data +

RS485 version (optional)

Pin	Signal	Name
1	Connected to Pin2	
2	Connected to Pin1	
3	not connected	
4	RXD-/TXD–	Receive/Transmit Data –
5	GND	Signal Ground
6	Connected to Pin7	
7	Connected to Pin6	
8	not connected	
9	RXD+/TXD+	Receive/Transmit Data +

17.1.5. Network connector

Version: RJ-45, 8-pin, motherboard reference P14

Pin	Signal	Name
1	TxP	Transmit +
2	TxN	Transmit -
3	RxP	Receive +
4	CTTD	Transmit Center Termination
5	CTRD	Receive Center Termination
6	RxN	Receive -
7	n.c.	
8	TERM	Termination

17.2. Internal connectors, motherboard MPC6.20

Overview

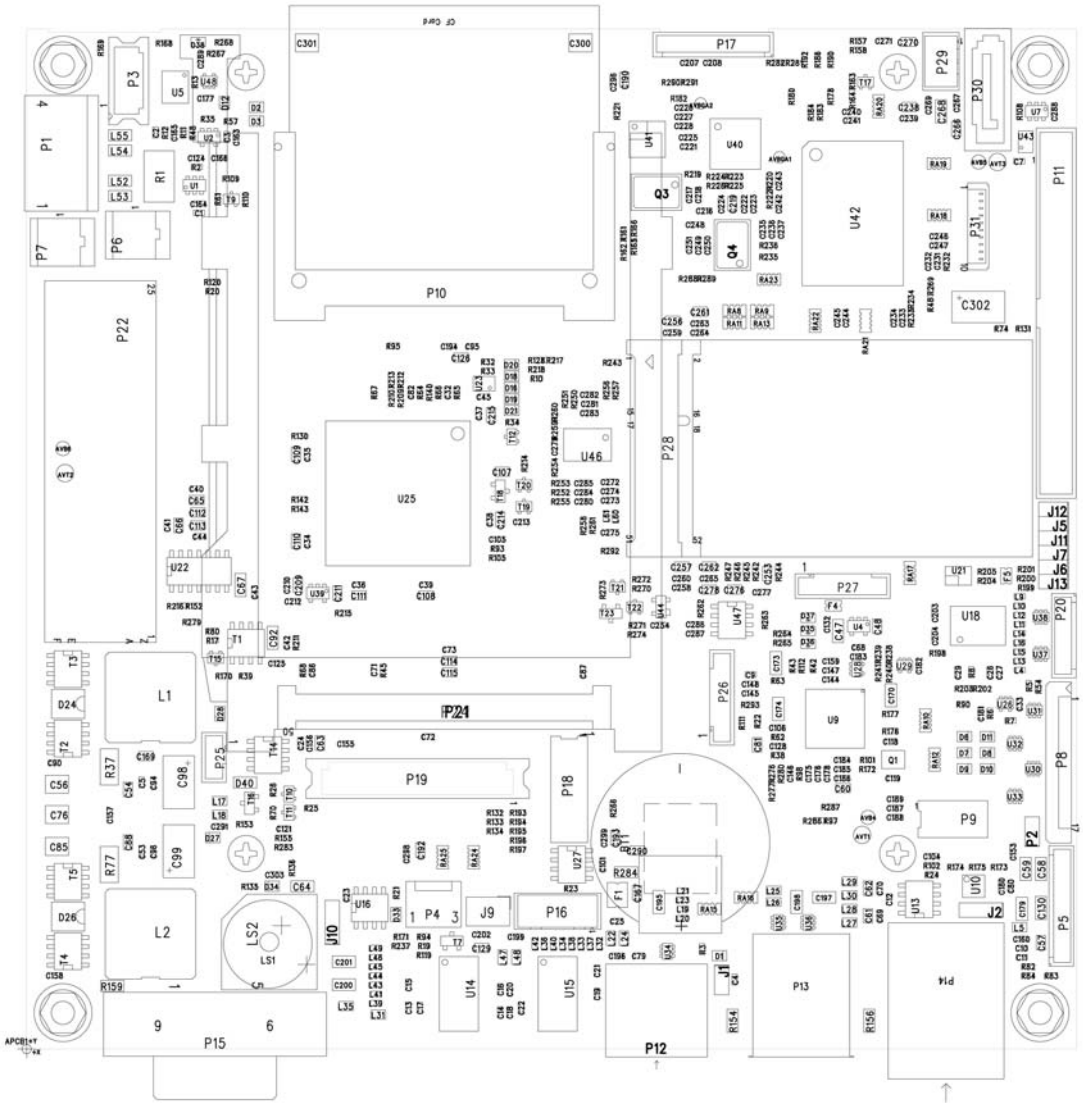

Figure 17.1: Connectors, motherboard version 06.2006

17.2.1. Cardbus connector

Version: 100-pin, MALE, optional equipment

Motherboard reference P21, via the top slot

Pin	Signal	Pin	Signal
1	GND	24	+5 V
2	D3	25	GND
3	D4	26	GND
4	D5	27	VPP
5	D5	28	A16
6	D6	29	GND
7	GND	30	A15
8	D7	31	A12
9	/CE1	32	GND
10	GND	33	A07
11	A10	34	A06
12	/OE	35	GND
13	GND	36	A05
14	A11	37	A04
15	A09	38	GND
16	GND	39	A03
17	A08	40	A02
18	A13	41	GND
19	GND	42	A01
20	A14	43	A00
21	/WE	44	GND
22	GND	45	D0
23	RDY/BSY	46	D1

Pin	Signal	Pin	Signal
47	GND	74	+5 V
48	D2	75	GND
49	WP/IOIS16	76	GND
50	GND	77	VPP
51	GND	78	A22
52	/CD1	79	GND
53	D11	80	A23
54	GND	81	A24
55	D12	82	GND
56	D13	83	A25
57	GND	84	VSS2
58	D14	85	GND
59	D15	86	RESET
60	GND	87	/WAIT
61	/CE2	88	GND
62	VSS1	89	/INPACK
63	GND	90	/REG
64	/IORD	91	GND
65	/IOWR	92	BVD2
66	GND	93	BVD1
67	A17	94	GND
68	A18	95	D8
69	GND	96	D9
70	A19	97	GND
71	A20	98	D10
72	GND	99	/CD2
73	A21	100	GND

17.2.2. Input voltage connector

Version: 1-row pin strip, 3.96 mm grid, 4-pin, motherboard reference P1

Pin	Signal
1	+12V
2	+12V
3	GND
4	GND

17.2.3. Ignition signal connector

Version: AMP Quick pin strip, 5-pin, motherboard reference P3

Pin	Signal
1	IGNITEP
2	DCM
3	n.c.
4	n.c.
5	SUPP_LP
6	VP12_SB
7	GND
8	GND
9	SDAacc
10	SCLacc

17.2.4. Heating power connectors

Version: Pin strip, 3.96mm grid, 2-pin, motherboard reference P6, P7

P6:

Pin	Signal
1	HEATVCC
2	HEATGND

P7:

Pin	Signal
1	HEATVCC
2	HEATGND

17.2.5. Serial port COM2

Version: AMP MicroMatch socket strip, 10-pin., motherboard reference P16

Pin	Signal
1	DCD2
2	DSR2
3	RXD2
4	RTS2
5	TXD2
6	CTS2
7	DTR2
8	RI2
9	SGND2
10	VCC_FC

17.2.6. Audio port

Version: Hirose DF13, 12-pin, motherboard reference P17

Pin	Signal
1	AUXAR
2	AUXAL
3	SNDR
4	SNDL
5	MIC
6	+5 V
7	+5 V
8	+12 V
9	GND
10	ASGND
11	SPEAKER_VCC
12	SPEAKER_GND

17.2.7. IDE connector

Version: 2-row pin strip, 2.00mm grid, 44-pin, motherboard reference P11

Pin	Signal	Pin	Signal
1	#RESET	2	GND
3	DD7	4	DD8
5	DD6	6	DD9
7	DD5	8	DD10
9	DD4	10	DD11
11	DD3	12	DD12
13	DD2	14	DD13
15	DD1	16	DD14
17	DD0	18	DD15
19	GND	20	n.c.
21	DMARQ	22	GND
23	#DIOW	24	GND
25	#DIOR	26	GND
27	IORDY	28	CSELL
29	#DMACK	30	GND
31	INTRQ	32	n.c.
33	DA1	34	#PDIAG
35	DA0	36	DA2
37	#CS0	38	#CSI
39	#DASP	40	GND
41	+5 V	42	+5 V
43	GND	44	+5 V

n.c. = not connected

17.2.8. Compact Flash connector

Version: 2-row pin base, 50-pin, motherboard reference P10

Pin	Signal	Pin	Signal
1	GND	2	D3
3	D4	4	D5
5	D6	6	D7
7	/CS0-	8	GND
9	GND	10	GND
11	GND	12	GND
13	VCC0	14	GND
15	GND	16	GND
17	GND	18	A2
19	A1	20	A0
21	D0	22	D1
23	D2	24	n.c.
25	n.c.	26	n.c.
27	D11	28	D12
29	D13	30	D14
31	D15	32	CS1-
33	n.c.	34	IORD-
35	IOWR-	36	WE-
37	INTRQ	38	VCC1
39	CSEL-	40	n.c.
41	RESET-	42	IORDY
43	NC/INPACK-	44	VCC/REG-
45	DASP-	46	PDIAG-
47	D8	48	D9
49	D10	50	GND

n.c. = not connected

17.2.9. LCD connector

Version: Hirose DF13, 40-pin, motherboard reference P19

Pin	Signal	Pin	Signal
1	GND	21	Ch1 TXOUT3
2	n.c.	22	Ch1 TXOUT3#
3	n.c.	23	GND
4	n.c.	24	GND
5	n.c.	25	Ch2 TXOUT0
6	n.c.	26	Ch2 TXOUT0#
7	n.c.	27	Ch2 TXOUT1
8	n.c.	28	Ch2 TXOUT1#
9	n.c.	29	Ch2 TXOUT2
10	n.c.	30	Ch2 TXOUT2#
11	GND	31	Ch2 TXCLK
12	GND	32	Ch2 TXCLK#
13	Ch1 TXOUT0	33	Ch2 TXOUT3
14	Ch1 TXOUT0#	34	Ch2 TXOUT3#
15	Ch 1 TXOUT1	35	GND
16	Ch1 TXOUT1#	36	GND
17	Ch1 TXOUT2	37	3.3 or 5 V, depending on J10, switched
18	Ch1 TXOUT2#	38	3.3 or 5 V, depending on J10, switched
19	Ch1 TXCLK	39	3.3 or 5 V, depending on J10
20	Ch1 TXCLK#	40	3.3 or 5 V, depending on J10

17.2.10. Front keyboard connector

Version: FFC connector, 17-pin, motherboard reference P8

Pin	Signal	Pin	Signal
1	SHIFT_LED_CON	10	SWITCH 2
2	GND	11	SWITCH 1
3	LEDTEMP_CON	12	SWD2
4	HDLED_CON	13	SWD3
5	LEDPWR_CON	14	SWITCH 0
6	SWITCH 5	15	SWD1
7	SWD0	16	SWD4
8	SWITCH 4	17	SWD5
9	SWITCH 3		

17.2.11. Inverter connector

Version: Hirose DF13, 12-pin, motherboard reference P5

Pin	Signal	Pin	Signal
1	GND	7	BKLEN
2	VDIMM	8	GND
3	GND	9	GND
4	BKLPWM	10	+12V
5	+5V	11	+12V
6	+5V	12	+12V

17.2.12. Touch connector

Version: Hirose DF13, 8-pin, motherboard reference P20

Pin	Signal	Pin	Signal
1	IN_TS_Y–	5	IN_TS_X+
2	IN_TS_SY–	6	IN_TS_SX+
3	IN_TS_SY+	7	IN_TS_SX–
4	IN_TS_Y+	8	IN_TS_X–

17.2.13. Riser card connector

Version: CPCI pin strip B (7-row), 2 mm grid, 154-pin

Motherboard reference P22

Row							
No.	Z	A	B	C	D	E	F/G
1	GND	GND	+12V	+12V	-12V	-12V	GND
2	GND	n.c.	#INTD	#INTC	#INTB	#INTA	GND
3	GND	n.c.	+5 V	+5V	+5V	+5V	GND
4	GND	#PCIRST	GND	n.c.	+5V	+5V	GND
5	GND	GND	GND	GND	GND	PCICLK3	GND
6	GND	PCICLK4	GND	#REQ3	#GNT3	GND	GND
7	GND	GND	n.c.	n.c.	n.c.	n.c.	GND
8	GND	GND	#GNT2	#GNT1	#REQ2	#REQ1	GND
9	GND	GND	GND	+3.3V	+3.3V	+3.3V	GND
10	GND	AD31	AD30	AD29	AD28	AD27	GND
11	GND	AD26	AD25	AD24	#CBE3	AD23	GND
15	GND	AD22	AD21	AD20	AD19	AD18	GND
16	GND	AD17	AD16	#CBE2	#FRAME	#IRDY	GND
17	GND	GND	GND	+3.3V	+3.3V	GND	GND
18	GND	#TRDY	#DEVSEL	#STOP	#LOCK	SERIRQ	GND
19	GND	#PERR	#PME	#SERR	PAR	AD15	GND
20	GND	GND	GND	+3.3V	+3.3V	GND	GND
21	GND	#CBE1	AD14	AD13	AD11	AD12	GND
22	GND	AD10	AD9	#CBE0	AD8	AD7	GND
23	GND	GND	GND	+3.3V	+3.3V	GND	GND
24	GND	AD6	AD4	AD5	AD3	AD2	GND
25	GND	GND	AD0	AD1	+3.3V	GND	GND

17.2.14. Internal connectors, riser card

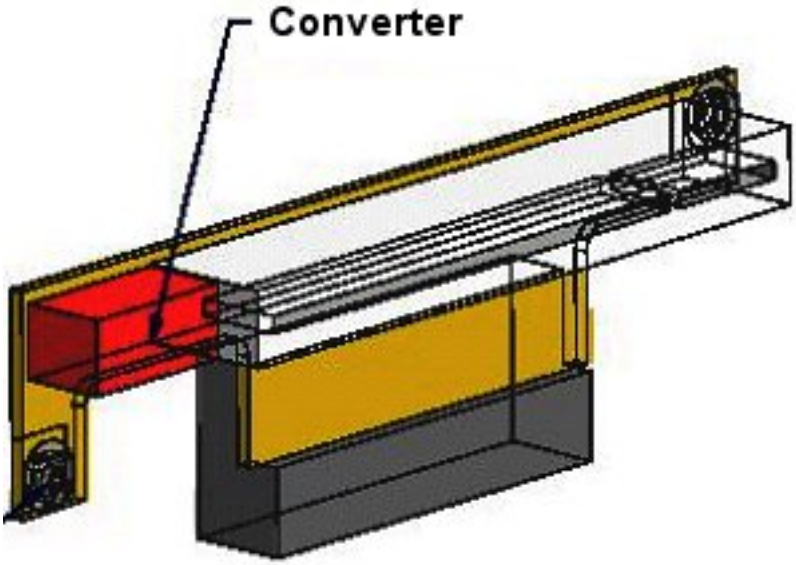

Figure 17.1: Internal connectors, riser card 1 x PCI

17.2.15. PCI connector

Version: MicroChannel, 124-pin, 2-row, 5 V/32 bit

Riser cards reference P4, P5

Signal	Pin	Pin	Signal
-12V	B1	A1	#TRST
TCK	B2	A2	+12V
GND	B3	A3	TMS
TDO	B4	A4	TDI
+5V	B5	A5	+5V
+5V	B6	A6	#INT A
#INT B	B7	A7	#INT C
#INT D	B8	A8	+5V
#PRSNT1	B9	A9	reserved
reserved	B10	A10	+5V I/O
#PRSNT2	B11	A11	reserved
GND	B12	A12	GND
GND	B13	A13	GND
Reserved	B14	A14	reserved
GND	B15	A15	#RST
CLK	B16	A16	+5V I/O
GND	B17	A17	#GNT
#REQ	B18	A18	GND
+5V I/O	B19	A19	reserved
AD31	B20	A20	AD30
AD29	B21	A21	+3.3V
GND	B22	A22	AD28

Signal	Pin	Pin	Signal
AD27	B23	A23	AD26
AD25	B24	A24	GND
+3.3V	B25	A25	AD24
C/#BE3	B26	A26	IDSEL
AD23	B27	A27	+3.3V
GND	B28	A28	AD22
AD21	B29	A29	AD20
AD19	B30	A30	GND
+3.3V	B31	A31	AD18
AD17	B32	A32	AD16
C/#BE2	B33	A33	+3.3V
GND	B34	A34	#FRAME
#IRDY	B35	A35	GND
+3.3V	B36	A36	#TRDY
#DEVSEL	B37	A37	GND
GND	B38	A38	#STOP
#LOCK	B39	A39	+3.3V
#PERR	B40	A40	SDONE
+3.3V	B41	A41	#SBO
#SERR	B42	A42	GND
+3.3V	B43	A43	PAR
C/#BE1	B44	A44	AD15
AD14	B45	A45	+3.3V
GND	B46	A46	AD13
AD12	B47	A47	AD11
AD10	B48	A48	GND
GND	B49	A49	AD09

Signal	Pin	Pin	Signal
mechanical code	B50	A50	mechanical code
mechanical code	B51	A51	mechanical code
AD08	B52	A52	C/#BE0
AD07	B53	A53	+3.3V
+3.3V	B54	A54	AD06
AD05	B55	A55	AD04
AD03	B56	A56	GND
GND	B57	A57	AD02
AD01	B58	A58	AD00
+5V I/O	B59	A59	+5V I/O
#ACK64	B60	A60	#REQ64
+5V	B61	A61	+5V
+5V	B62	A62	+5V

17.2.16. VGA Interface (for service purposes only)

Version: AMP MicroMatch 2x5-pin, reference P18

Pin	Signal
1	GND
2	VGA_R
3	VGA_G
4	VGA_B
5	GND
6	GND
7	VGA_HSY
8	VGA_VSY
9	+5 V
10	+5 V

17.2.17. COM4 connection

Version: JST BM10B-SRSS-TB, 1x10-pin P31

All signals have TTL levels.

Pin	Signal
1	#TOU_DCD
2	#TOU_DSR
3	TOU_RX
4	#TOU_RTS
5	TOU_TX
6	#TOU_CTS
7	#TOU_DTR
8	#TOU_RI
9	GND
10	+5 V

17.2.18. USB post 3 and 4

Version: Hirose, 12-pin, motherboard reference P26

Pin	Signal
1	GND
2	USBP3P
3	USBP3M
4	+5 V
5	GND
6	USBP4P
7	USBP4M
8	+5 V

17.2.19. PCIe MiniCard socket

Version: Molex 67910, reference P28

Pin	Signal	Pin	Signal
1	#WAKE	27	GND
2	VP3.3	28	VCC15
3	n.c.	29	GND
4	GND	30	SMB_CLK
5	n.c.	31	PETn0
6	VCC15	32	SMB_DATA
7	#CLKREQ	33	PETp0
8	n.c.	34	GND
9	GND	35	GND
10	n.c.	36	USB_D-
11	REFCLK-	37	n.c.
12	n.c.	38	USB_D+
13	REFCLK+	39	n.c.
14	n.c.	40	GND
15	GND	41	n.c.
16	n.c.	42	#LEDWWAN
17	n.c.	43	n.c.
18	GND	44	#LEDWLAN
19	n.c.	45	n.c.
20	#W_DISABLE	46	#LEDWPAN
21	GND	47	n.c.
22	#PERST	48	VCC15
23	PERn0	49	n.c.
24	VP3.3	50	GND
25	PERp0	51	n.c.
26	GND	52	VP3.3

18. Appendix C: Jumper

18.1. Warnings

For the operation and settings of the hardware configuration described above, the jumper positions do not need to be changed.

Changing the jumper positions can impair the function of the DLoG MPC 6 or destroy the unit! If the jumper settings are changed, DLoG GmbH is no longer liable for warranty claims!

18.2. Standard jumper settings

The default jumper settings are marked with an asterisk *.

Take note of the markings for the jumper position:

Jumper closed

Jumper open

18.3. Jumper layout view, motherboard

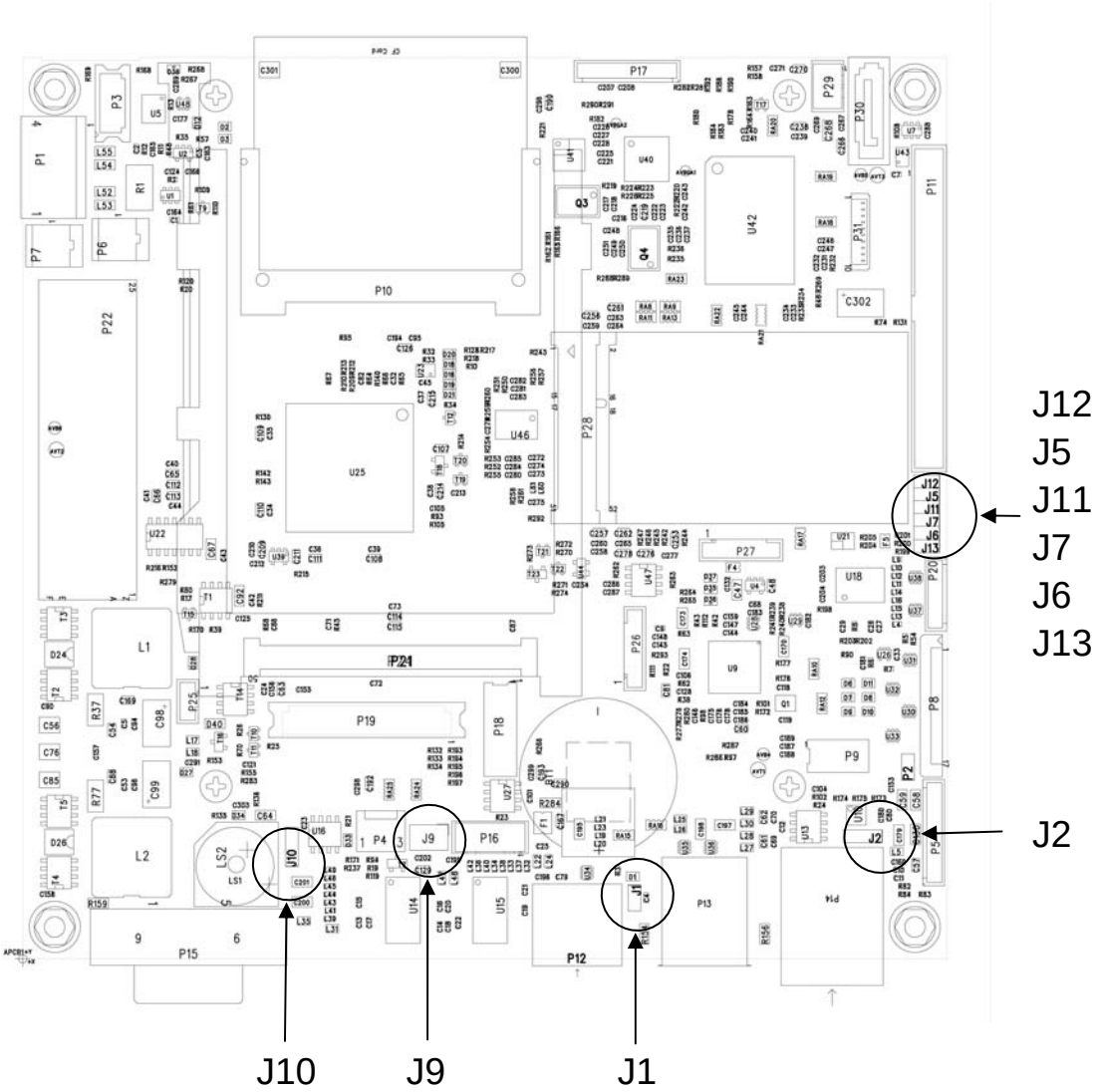

Figure 18.1: Jumper layout, motherboard MPC6.20 06.2006

18.3.1. Battery

Version: 1-row pin strip, 2 mm grid, 2-pin

Motherboard reference J1

Jumper		Function
1	2	RTC/CMOS RAM, battery buffered *
1	2	RTC/CMOS reset

*) factory setting

18.3.2. Ethernet configuration

Version: 1-row pin strip, 2.00 mm grid, 3-pin

Motherboard reference J2

Jumper			Function
1	2	3	Davicom ETH controller
1	2	3	Intel ETH controller *

*) factory setting

18.3.3. Compact Flash configuration

Version: 1-row pin strip, 2 mm grid, 2-pin

Motherboard reference J5

Jumper		Function
1	2	Compact Flash is master*
1	2	Compact Flash is slave

*) factory setting

18.3.4. Touch enable

Version: 1-row pin strip, 2 mm grid, 2-pin

Motherboard reference J6

Jumper		Function
1	2	Touch deactivated
1	2	Touch activated *

*) factory setting

18.3.5. Touch configuration

Version: 1-row pin strip, 2 mm grid, 2-pin

Motherboard reference J7

Jumper		Function
1	2	8-wire touch controller
1	2	4-wire touch controller *

*) factory setting

18.3.6. COM1 configuration

Version: 2-row pin strip, 2.00 mm grid, 6-pin

Motherboard reference J9

Jumper			Function
5	3	1	Pin9 is RI*
6	4	2	not required*

*) factory setting

Jumper			Function
5	3	1	Pin9 is the voltage supply
6	4	2	+5 V on Pin9

Jumper			Function
5	3	1	Pin9 is the voltage supply
6	4	2	+12 V on Pin9

18.3.7. LCD configuration

Version: 1-row pin strip, 2.00 mm grid, 3-pin

Motherboard reference J10

Jumper			Function
1	2	3	+5.0 V LCD supply
1	2	3	+3.3 V LCD supply *

*) factory setting

18.3.8. Compact Flash DMA configuration

Version: 1-row pin strip, 2.00 mm grid, 2-pin

Motherboard references J11 and J12

Jumper	Pin		Function
J11	1	2	Compact Flash PIO *
J12	1	2	

Jumper	Pin		Function
J11	1	2	Compact Flash DMA
J12	1	2	

*) factory setting

18.3.9. Touch interface selection

Version: 1-row pin strip, 2 mm grid, 2-pin

Motherboard reference J13

Jumper		Function
1	2	PS/2 interface
1	2	RS232 interface *

*) factory setting

18.3.10. External shield connection

Via screws

19. Appendix D: Tools

19.1. Please follow the safety notices

Pay careful attention to the *Important safety notices* included at the start of this manual.

Observe the relevant accident prevention regulations when using tools of any kind.

19.2. DLoG MPC 6 toolkit

The following tools are required to assemble/disassemble the DLoG MPC 6.

- 3 mm hexagonal screwdriver
- Phillips screwdriver, size 1
- Screwdriver, size 2
- Screwdriver, size 4
- Socket wrench, size 5 mm
- Socket wrench, size 5.5 mm

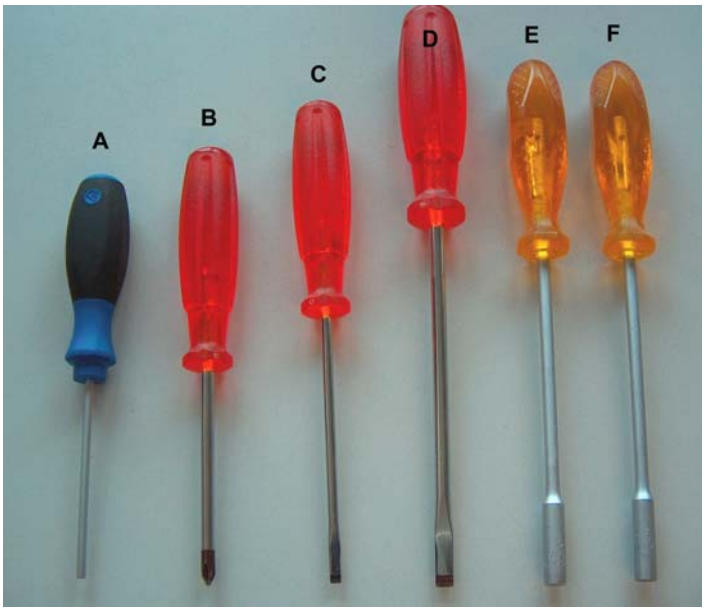

Figure 19.1: DLoG MPC 6 toolkit

You will also need a 0.5 to 4.0 Nm torque wrench with the following replacement blades or bits:

- Cross slot PH1
- Hexagonal 3 mm

19.3. Mounting bracket toolkit

The following tools are required for positioning the DLoG MPC 6's mounting bracket:

Figure 19.2: Mounting bracket toolkit

- For mounting and positioning the stationary mounting bracket: Hexagonal socket wrench (Allen key) sizes 5 mm and 6 mm
- For mounting and positioning the mobile mounting bracket: Hexagonal socket wrench (Allen key) size 6 mm

20. Appendix E: Mechanical dynamic loading

20.1. Introduction

The mechanical environmental conditions of the DLoG MPC 6 can vary greatly in terms of vibrations, collisions and shocks. The matter is made more difficult by the fact that the random values for acceleration and their frequencies for a given location are often unknown.

It is therefore useful to divide the values into three operation classes 5M3, 5M2 and 5M1 on the basis of standards, previous measurements and experience. The following standards offer a practical means of reference:

- DIN EN 60721-3-5: 1998 classification of environmental conditions, part 3, section 5: Use on and in ground vehicles.
- Military standard MIL-STD 810F: 2000.

(5)M3 Mobile use

Operational environments with high energy vibrations and high energy shocks as well as rough handling/transport compliant with:

- Operation class 5M3 according to DIN EN 60721-3-5 or equivalent.
- Category US Highway Truck according to MIL-STD 810F.
- Examples: Vehicles without shock absorption: Fork lifts, unbalanced machines: Combustion engine of a construction machine.

(5)M2 Restricted mobile application

Operational environments with low energy vibrations and high energy shocks as well as careful handling/transport compliant with:

- Operation class 5M2 according to DIN EN 60721-3-5 or equivalent.
- Category US Highway Truck according to MIL-STD 810F.
- Examples: Vehicles with shock absorption: Driver's cab in a tractor, standing machines: Machine tools.

(5)M1 Stationary use

Operational environments with low energy vibrations and medium energy shocks as well as very careful handling/transport compliant with:

- Operation class 5M1 according to DIN EN 60721-3-5.
- Examples: Vehicles with very good shock absorption: Car dashboard, immobile mounting surfaces: Desk or wall.

20.2. Using the device without vibration insulation (tuned to a high frequency)

Selection criteria: Stationary, partly mobile or fully mobile applications for which components offering insulation against vibrations cannot be used or are not required.

The DLoG MPC 6 system can vibrate and should therefore be installed using the bracket as rigidly as possible.

With their variable mountings, the DLoG MPC 6 units form a spring-mass system that can result in excitation by one or more random vibrations or shocks from its surroundings.

This system reacts with natural oscillations, the amplitudes of which can be up to 20 times greater than the excitation amplitudes (resonance effects). The goal is therefore to remove resonance points of this kind or at least to tune the system to such a high frequency that they fall within the range of low excitation amplitudes.

For an initial assessment, you can test the device by hand. Bring the system to excitation by gently hitting it with your hand. If the DLoG MPC 6 starts to visibly oscillate and if the vibrations take a long time to die away, it is probable that the natural frequency is too low. In this case, we recommend reinforcing the fixing points to the maximum bending moments (through the use of rigid sections, for example).

Practically speaking, natural frequencies above 100 Hz are sufficient. However, those below 50 Hz are likely to lead to damaging amplitudes during resonance which may result in fatigue fractures along the outer mounting parts or on the internal electronic components or even a loosening of the connections.

20.3. Use with passive vibration insulation (tuned to a low frequency)

Selection criteria: Mobile use

> The system can be tuned to a low frequency by installing a flexible bearing.

For example, you can attach the mounting bracket to elastomer springs or rubber buffers.

The ideal total spring constant should be dimensioned in such a way so that the natural frequency of the system falls below the lowest excitation frequency.

All excitations with a frequency greater than 1.4 times the natural frequency would then be dampened by a counter-phase effect. This is practically impossible, if you consider that excitation accelerations within the range of around 10 Hz to 200 Hz or more may occur. Furthermore, the springs of the DLoG MPC 6 would strongly deflect while static or visibly swivel while resonating (blurred display).

Based on our experience, we have found that the natural frequencies of unsprung ground vehicles lie between 15 Hz and 25 Hz. Although the elastic bearing does create an interfering resonance, it can suppress high excitation frequencies to various degrees of success.

20.4. Dimensioning example DLoG MPC 6/110

Example for dimensioning an elastic bearing with mounting bracket for mobile application (according to the figure on next page)

The DLoG MPC 6/110 is screwed into a mobile position with a mounting bracket. Elastomer springs should be installed between the back of the mounting bracket and the assembly surface in the vehicle so that the depth can be adjusted.

The point of resonance for the spatial axis with the greatest deflection should be 20 Hz.

- Which elastomer springs are suitable?
- Which insulating effects can be expected for different excitation frequencies?

Mounting example for table-top attachment with elastomer springs:

- DLoG MPC 6/110 with mobile mounting bracket , adjustable to 15 degrees
- 3 elastomer springs
- Diameter 30 to 40 mm, 20 to 30 mm high
- Natural rubber

- Total vibrating weight of DLoG MPC 6/110: approx. 5 kg

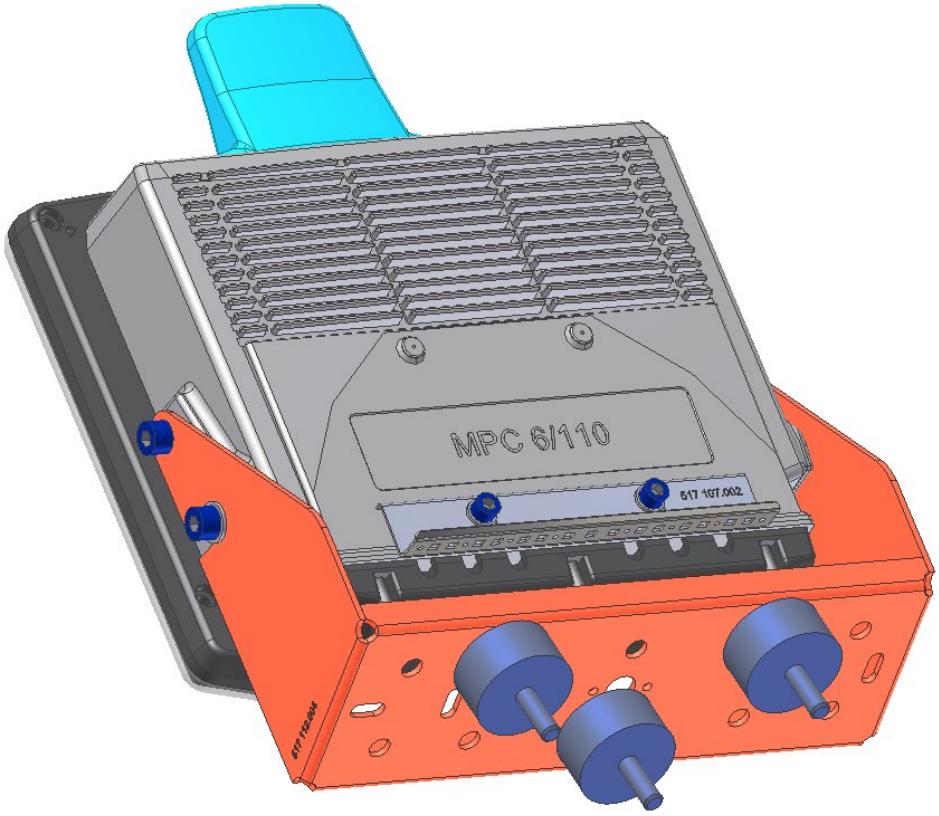

Figure 20.1: Table-top attachment with elastomer springs

20.4.1. Approximate solution for the selection of elastomer springs

Since $\omega^2 = c / m$, we obtain the following relationship:

$$c \cong \frac{4\pi^2}{1000} \cdot m \cdot f_e^2 \approx 0{,}039 \cdot m \cdot f_e^2 = \underline{\underline{78 N / mm}}$$

Where:

m	= oscillatory mass	= 5 kg
f_e	= natural frequency	= 20 Hz
c	= spring constant in N/mm	

This model applies to the oscillatory mass at the device's center of gravity. This lies around 120 mm above the mounting surface of the group of springs and also displaced from it. To determine the spring constant for an individual elastomer spring, the leverages and arrangement of the springs (here in a triangle) must also be considered.

Furthermore, each of the 4 elastomer springs connected in parallel must deliver one third of the total spring constant, i.e., 78 N/mm / 3 = 26 N/mm.

To simplify matters, of the 6 possible degrees of freedom we will only consider those with the greatest deflection in the case of the DLoG MPC 6/110. In other words: We observe the display as it oscillates towards or away from us (a combination of rotational and longitudinal oscillation).

Comparative measurements for <u>precisely</u> the arrangement displayed in *figure 20.5* (construction of the mounting bracket, quantity and position of the elastomer springs) show that the individual spring must be stiffer by a factor of 25 for the mathematical model stated above to be applied.

Factors for other mountings with elastomer springs must be calculated through testing!

As a result, this model gives a value of 26 N/mm x 22.5 = <u>585 N/mm</u> for the required single spring constant.

The next step is to look through the manufacturer's datasheets (such as those from gmt-gmbh.de or simrit.de) to find the right types of elastomer springs and rubber buffers.

Here we have decided to use springs with an M8 thread and cylindrical body made of natural rubber (NR). Based on the datasheet for a diameter of 30 mm and a height of 20 mm, for example, we arrived at the pressure load:

Compressive force 539 N / Displacement 1 mm = 539 N/mm for a Shore hardness A 70.

This value lies below the default value. What is the natural frequency?

The following formula can be used to calculate the natural frequency:

$$f_e \approx 5{,}03 \cdot \sqrt{\frac{c}{m}} = 19.1Hz$$

Where:

f_e	= natural frequency in Hz	
c	= total spring constant	= 539 N/mm (calculated from datasheet values) * 3 (springs) / 22.5 (factor) = 71.9 N/mm
m	= oscillatory mass	= 5 kg

This theoretical value of 19.1 Hz lies in the range of 20 Hz ± 5 Hz as measured in practice.

The calculations depicted above are only approximations, which is why we recommend a final field test with the selected elastomer springs .

20.4.2. Further possible steps for optimization:

- If it turns out that the DLoG MPC 6's resonance deflections could be greater, the natural frequency can be reduced.
  In our selected example, softer elastomer springs with the same construction could be used. In that case, it would still be possible that a Shore hardness of A55 activates approx. 13 Hz.
- However, if the resonance deflections are too high (10 mm and more), the natural frequency should be increased.
  For example, using 3 elastomer springs with a diameter of 40 instead of 30 mm or using 4 instead of 3 springs.

The number, form, material type and arrangement of the elastomer springs can be used to control the natural frequency. As a rule, constructions with vulcanized fittings are used.

Static tensile loads on the elastomer springs should be avoided, as the elastomer can tear easily. A DLoG MPC 6 should therefore never be suspended from elastomer springs.

20.4.3. Approximate solution for determining insulating effects

A transmission function can be used to reach an exact calculation. However, we will not detail this function here. The following equation is based on this transmission function (very small damping factors of approx. 0.05) and is good for making estimates:

$$Isolationsgrad \cong \left(1 - \frac{1}{\left|1 - \lambda^2\right|}\right) \times 100\ \% = \mathrm{Re}\,aktionsbeschleunigung\ /\ Anregungsbeschleunigung$$

Where λ = excitation frequency / natural frequency

for λ not equal to 1

Excitation frequency	Natural frequency	λ	Degree of insulation
10 Hz	20 Hz	0.5	-33 % Warning! Amplification!
20 Hz	20 Hz	1	Warning! Resonance, approx. – 500 % and greater! High amplification!
Approx. 28 Hz	20 Hz	$\sqrt{2}$	0, no insulation
40 Hz	20 Hz	2	66 %
60 Hz	20 Hz	3	88 %
80 Hz	20 Hz	4	93 %

Based on this table, we can clearly expect very good insulation for excitation frequencies that are twice as high as the system's natural frequency.

Consequently, the amplitude of the reaction accelerations of the DLoG MPC 6 still only reaches 66 % of the amplitude of the excitation accelerations, which actually have an effect twice that of the natural frequency.

The table also demonstrates the costs of achieving this, namely that all excitation frequencies below the natural frequency are amplified – to a maximum when resonance occurs.

Implication for designing computer mounts:

- If high energy excitation frequencies mainly occur in the region of the natural frequency of the DLoG MPC 6 with its mounting, which can be found, for example, in a vehicle chassis tuned to a low frequency. In this case a spring mounting of the DLoG MPC 6 should be avoided.

- However, if high energy excitation frequencies mainly occur above the natural frequency, it is recommended that you use passive vibration insulation for the computer. This applies to unsprung fork lifts with solid rubber tires or for unbalanced machines with relatively constant and correspondingly high operating speed.

Random samples of fork lift rotors were taken and the field excitations measured:

Track:	Warehouses with loading thresholds, potholes and pallet splinters
Amplitude of the excitation accelerations	Mean value ±1 g to ±2 g for all three spatial axes with peak values ±5 g approximately twice each minute and ±8 g to ±13 g occasionally
Excitation frequencies:	5 Hz to 200 Hz

These values can be assigned to operation class 5M3.

The basic DLoG MPC 6 is designed for operation class 5M3. Depending on the equipment (e.g. 24-key keyboard) and mounting types (e.g. with elastomer springs), the operation class can be reduced to 5M2 or 5M1. If you have any questions regarding the permissible operation class, please contact the DLoG technical service department.

20.5. Determining natural frequencies

There are several ways of determining a system's natural frequencies:

- Take field measurements with acceleration sensors and frequency analyses (very time-consuming, but produces accurate results for all spatial axes)
- Calculating the known static spring deflection using the following quantity equation (minimal measurement work, very good approximation)

$$f_e \approx \frac{15{,}8}{\sqrt{x_{St}}}$$

Where: f_e = natural frequency in Hz

x_{st} = static spring deflection in mm
= deflection of the center of gravity in the direction of the gravitational force (for example using a mechanical timer)

Further technical information can be found in the product documents provided by the elastomer spring manufacturers.

21. Appendix F: BIOS

21.1. BIOS setup description

The following section describes the BIOS setup program. The BIOS setup program can be used to view and change the BIOS settings for the module. Only experienced users should change the default BIOS settings.

21.2. Entering the BIOS setup program

The BIOS setup program can be accessed by pressing the <Del> key during POST.

21.3. Setup menu and navigation

The BIOS setup screen is composed of the menu bar and two main frames. The menu bar is shown below. The left frame displays all the options that can be configured in the selected menu. Grayed-out options cannot be configured. Only the blue options can be configured. When an option is selected, it is highlighted in white.

The right frame displays the key legend. Above the key legend is an area reserved for text messages. These text messages explain the options and the possible impacts when changing the selected option in the left frame.

The setup program uses a key-based navigation system. Most of the keys can be used at any time while in setup. The table below explains the supported keys:

Key	Description
← → Left/Right	Select a setup menu (e.g. Main, Boot, Exit).
↑ ↓ Up/Down	Select a setup item or sub menu.
+ - Plus/Minus	Change the field value of a particular setup item.
Tab	Select setup fields (e.g. in date and time).
F1	Display general help screen.
F2/F3	Change colors of setup screen.
F7	Discard changes.
F9	Load optimal default settings.
F10	Save changes and exit setup.
END	This button can be pressed repeatedly immediately after power is initiated so that the manufacturer default settings can be loaded. This is helpful when a previous BIOS setting is no longer desired.
ESC	Discard changes and exit setup.
ENTER	Display options of a particular setup item or enter sub menu.

21.4. Main setup screen

When you first enter the BIOS setup, you will enter the main setup screen. You can always return to the main setup screen by selecting the main tab.

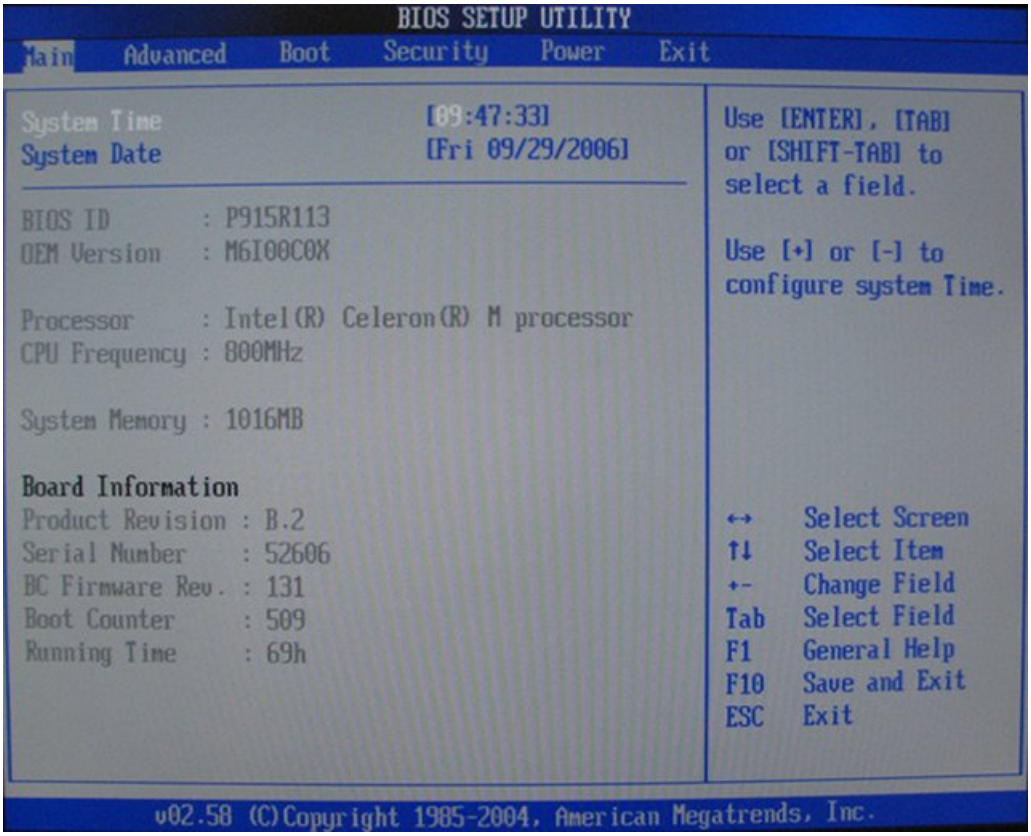

Figure 21.1: BIOS main setup screen

The main screen reports BIOS, processor, memory and board information and is for configuring the system date and time.

Feature	Options	Description
System Time	Hour:Minute:Second	Specifies the current system time. Note: The time is in 24 hour format.
System Date	Day of week, month/day/year	Specifies the current system date. Note: The date is in month/day/year format.
BIOS ID	No option	Displays the BIOS ID.
OEM Version	No option	Displays the production BIOS version
Processor	No option	Displays the processor type.
System Memory	No option	Displays the total amount of system memory.
Product Revision	No option	Displays the hardware revision of the board
Serial Number	No option	Displays the serial number of the board
BC Firmware Rev.	No option	Displays the revision of the CPU board controller.
Boot Counter	No option	Displays the number of boot-ups. (max. 16777215)
Running Time	No option	Displays the time the board is running [in hours max. 65535].

21.5. Advanced setup

Select the advanced tab from the setup menu to enter the advanced BIOS setup screen.

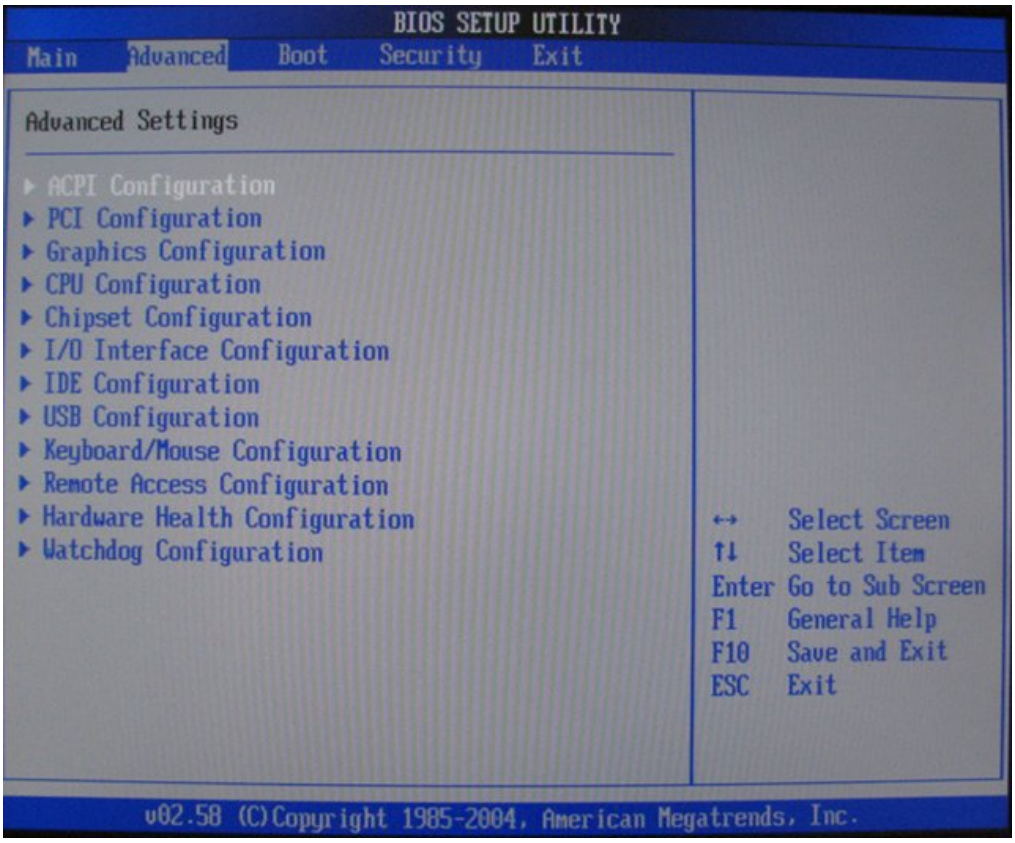

Figure 21.1: BIOS advanced setup

21.5.1. ACPI configuration submenu

Feature	Options	Description
ACPI Aware O/S	No Yes	Set this value to allow the system to utilize the Intel ACPI (Advanced Configuration and Power Interface). Set to NO for non ACPI aware operating system like DOS and Windows NT. Set to YES if your OS complies with the ACPI specification (e.g. Windows 2000, XP)
ACPI 2.0 Features	No Yes	Enable RSDP pointers to 64-bit fixed system description tables.
ACPI APIC support	Enabled Disabled	Set to enable to include the APIC support table to ACPI.

21.5.2. PCI configuration submenu

Feature	Options	Description
Plug & Play O/S	No Yes	Specifies if manual configuration is desired. Set to NO for operating systems that do not meet the Plug & Play specification. In this case the BIOS configures all devices in the system. Select YES to let the operating system configure PnP devices that are not required for booting.
PCI Latency Timer	32, 64, 96, ... 248	This option allows you to adjust the latency timer of all devices on the PCI bus.
Allocate IRQ to PCI VGA	Yes No	Allow or restrict the BIOS from giving the VGA controller an IRQ resource.
► PCI IRQ Resource Exclusion	Submenu	Opens PCI IRQ resource exclusion submenu.
► PCI Interrupt Routing	Submenu	Opens PCI interrupt routing submenu.

PCI IRQ resource exclusion submenu

Feature	Options	Description
IRQ xx	Available Reserved	Allow or restrict the BIOS from giving IRQ resource to PCI/PNP devices.

PCI interrupt routing submenu

Feature	Options	Description
PIRQ xx (devices)	Auto, 3, 4, .., 14, 15	Select fixed IRQ for PCI interrupt line or set to AUTO to let the BIOS and operating system route an IRQ. Note: Make sure that the selected IRQ is not assigned to legacy I/O.

21.5.3. Graphics configuration submenu

Feature	Options	Description
Primary Video Device	Internal VGA PCI /Int.VGA	Select primary video adapter to be used during boot up.
Internal VGA Mode Select	Disabled Enabled, 1MB Enabled, 8MB	This option allows you to disable the internal VGA controller or enable it with 1MB or 8MB initial frame buffer size.
DVMT Mode Select	Fixed mode DVMT mode Combo mode	Select the DVMT mode to be used by the DVMT graphics driver. Fixed mode The amount of DVMT memory selected is always allocated by the DVMT graphics driver. DVMT mode: The DVMT driver only allocates as much memory as required for the current video mode but may allocate memory up to the limit specified in the following node. Combo mode: The DVMT graphics driver allocates at least 64MB but may allocate up to 128MB if required. DVMT = Dynamic Video Memory Technology
DVMT/FIXED Memory	64MB 128MB	Amount of DRAM the DVMT graphics driver can or will allocate (depends on DVMT mode selected).
Boot Display Device	Auto CRT only SDVO only CRT + SDVO LFP only CRT + LFP	Select the display device(s) used for boot up. LFP = Local Flat Panel (LVDS) Note: Auto feature only works with a DDC compatible CRT monitor.

Feature	Options	Description
Local Flat Panel Type	Auto VGA 1x18 (002h) VGA 1x18 (013h) SVGA 1x18 (004h) XGA 1x18 (006h) XGA 2x18 (007h) XGA 1x24 (008h) XGA 2x24 (012h) SXGA 2x24 (00Ah) UXGA 2x24 (00Ch) Customized EDID™ 1 Customized EDID™ 2 Customized EDID™ 3	Select a predefined LFP type or choose Auto to let the BIOS automatically detect and configure the attached LVDS panel. Auto detection is performed by reading an EDID data set via the video I²C bus. Note: Customized EDID™ utilizes an OEM defined EDID™ data set stored in the BIOS flash device. VGA = 640x480 SVGA = 800x600 XGA = 1024x768 SXGA = 1280x1024 Use the following settings for: VGA 1x18 (013h) for Hosiden HLD1045AE SVGA 1x18 (004h) for Optrex T-51944D104J-FW-A-AA,NEC NL8060BC31-28D and AUO G104SN03 V0 XGA 1x18 (006h) for NEC NL10276BC24-13
Local Flat Panel Scaling	Centering, expand text, expand graphics, expand text & graphics	Select whether and how to scale the actual video mode resolution to the local flat panel resolution.

21.5.4. CPU configuration submenu

Feature	Options	Description
Processor Info Block	No option	Displays the processor manufacturer, brand, frequency, and cache sizes.
On Demand Clock Modulation	Disable	Allows a reduction of the performance of the processor by utilizing clock modulation. The value indicates the CLOCK ON to CLOCK OFF interval ratio. E.g. 75% results in a performance decrease of about 25%. Note: This option is only available for Celeron M CPUs

21.5.5. Chipset configuration submenu

Feature	Options	Description
Memory Hole	Disabled 15MB-16MB	Enable or disable the memory hole between 15MB and 16MB. If enabled, accesses to this range are forwarded to the LPC/PCI bus.
IOAPIC	Disabled Enabled	Enable/Disable ICH6M IOAPIC function.
APIC ACPI SCI IRQ	Disabled Enabled	If set to disabled IRQ9 is used for the SCI. If set to enabled IRQ20 is used for the SCI.
C4 On C3	Disabled Enabled	If enabled, the CPU is put to C4 state, when the ACPI OS initiates a transition to C3, for additional power saving at “Desktop Idle Mode”.
Active State Power Management	Disabled Enabled	Enable or disable PCI Express L0s and L1 link power states.
PCI Express Port 1	Enabled Disabled	

21.5.6. I/O Interface configuration submenu

Feature	Options	Description
Onboard Audio Controller	Azalia AC97 Disabled	Configure onboard audio controller for AC'97 or Azalia (Intel High Definition Audio) mode. Note: Azalia mode requires an external Azalia codec.
Onboard Ethernet Controller	Enabled Disabled	Enable/Disable the ICH6M onboard Ethernet controller.
Serial Port 1/2 Configuration	Disabled 3F8/IRQ4 2F8/IRQ3 3E8/IRQ4 2E8/IRQ3	Specifies the I/O base address and IRQ of serial port 1/2.
Parallel Port Address	Disabled 378 278 3BC	Specifies the I/O base address used by the parallel port.
Serial Port 3/4 Configuration	Disabled 3F8/IRQ11, 2F8/IRQ10, 3E8/IRQ11, 2E8/IRQ10, 3F8/IRQ10, 2F8/IRQ11, 3E8/IRQ10, 2E8/IRQ11	Specifies the I/O base address and IRQ of serial port 3/4.

21.5.7. IDE configuration submenu

Feature	Options	Description
ATA/IDE Configuration	Disabled **Compatible** Enhanced	Configure the integrated parallel and serial ATA controllers. Disabled: Both controllers are disabled. Compatible: Both controllers operate in legacy or compatible mode. Enhanced: Both controllers operate in enhanced or native mode.
► Primary IDE Master	Submenu	Reports type of connected IDE device.
► Primary IDE Slave	Submenu	Reports type of connected IDE device.
Hard Disk Write Protect	**Disabled** Enabled	If enabled, protects the hard disk from being erased. Disabled allows the hard disk to be used normally. Read, write and erase functions can be performed to the disk.
IDE Detect Time Out (s)	0, 5, 10, ... 30, **35**	Set this option to stop the BIOS from searching for IDE devices within the specified number of seconds. Basically, this allows you to fine-tune the settings to allow for faster boot times. Adjust this setting until a suitable timing can be found that will allow for all IDE disk drives that are attached to be detected.

Primary/secondary IDE master submenu

Feature	Options	Description
Device	no option	Displays the type of drive detected. he 'grayed-out' items below are the IDE disk drive parameters taken from the firmware of the IDE disk
Vendor	no option	Manufacturer of the device.
Size	no option	Total size of the device.
LBA Mode	Supported Not supported	Shows whether the device supports logical block addressing.
Block Mode	Number of sectors	Block mode boosts IDE performance by increasing the amount of data transferred. Only 512 bytes of data can be transferred per interrupt if block mode is not used. Block mode allows transfers of up to 64 KB per interrupt.
PIO Mode	0, 1, 2, 3, 4	IDE PIO mode programs timing cycles between the IDE drive and the programmable IDE controller. As the PIO mode increases, the cycle time decreases.
Async DMA	No option	This indicates the highest asynchronous DMA mode that is supported.
Ultra DMA	No option	This indicates the highest synchronous DMA mode that is supported.
S.M.A.R.T	No option	Self-monitoring analysis and reporting technology protocol used by IDE drives of some manufacturers to predict drive failures.
Type	Not Installed Auto	Sets the type of device that the BIOS attempts to boot from after the POST has

Feature	Options	Description
	CD/DVD ARMD	completed. **Not Installed** prevents the BIOS from searching for an IDE disk. **Auto** allows the BIOS to auto detect the IDE disk drive type. CD/DVD specifies that an IDE CD/DVD drive is attached. The BIOS will not attempt to search for other types of IDE disk drives. ARMD specifies an ATAPI removable media device. This includes, but is not limited to ZIP and LS-120.
LBA/Large Mode	Disabled **Auto**	Set to **AUTO** to let the BIOS auto detect LBA mode control. Set to **Disabled** to prevent the BIOS from using LBA mode.
Block (Multi-Sector Transfer)	Disabled **Auto**	Set to **AUTO** to let the BIOS auto detect device support for multisector transfer. The data transfer to and from the device will occur multiple (the number of sectors, see above) sectors at a time. Set to **Disabled** to prevent the BIOS from using block mode. The data transfer to and from the device will occur one sector at a time.
PIO Mode	**Auto** 0, 1, 2, 3, 4	Set to **AUTO** to let the BIOS auto detect the supported PIO mode.
DMA Mode	**Auto** SWDMA0, 1, 2 MWDMA0, 1, 2 UDMA0, 1, 2, 3, 4, 5, 6	Set to **AUTO** to let the BIOS auto detect the supported DMA mode. SWDMA = Single Word DMA MWDMA = Multi Word DMA UDMA = Ultra DMA
S.M.A.R.T	**Auto** Disabled Enabled	Set to **AUTO** to let the BIOS auto detect hard disk drive support. Set to **Disabled** to prevent the BIOS from

Feature	Options	Description
		using SMART feature. Set to **Enabled** to allow the BIOS to use SMART feature on supported hard disk drives.
32 Bit Data Transfer	Disabled **Enabled**	Enable/Disable 32 bit data transfers on supported hard disk drives.

21.5.8. USB configuration submenu

Feature	Options	Description
USB Functions	Disabled 2 USB ports 4 USB ports 6 USB ports	Disable ICH6M USB host controllers. Enable UHCI host controller 0. Enable UHCI host controller 0 + 1. Enable UHCI host controller 0 + 1 + 2.
USB 2.0 Controller	Enabled Disabled	Enable the ICH6M USB 2.0 (EHCI) host controller.
Legacy USB Support	Disabled Enabled Auto	Legacy USB support refers to the USB keyboard, USB mouse and USB mass storage device support. If this option is Disabled, any attached USB device will not become available until a USB compatible operating system is booted. However, legacy support for USB keyboard will be present during POST. When this option is Enabled, those USB devices can control the system even when there is no USB driver loaded. AUTO disables legacy support if no USB devices are connected.
USB Keyboard Legacy Support	Disabled Enabled	Enable/Disable USB keyboard legacy support. NOTE: This option has to be used with caution. If the system is equipped with USB keyboard only then the user cannot enter setup to enable the option back.
USB Mouse Legacy Support	Disabled Enabled	Enable/Disable USB mouse legacy support.
USB Storage Device Support	Disabled Enabled	Enable/Disable USB mass storage device support.

Feature	Options	Description
Port 64/60 Emulation	Disabled Enabled	Enable/Disable the “Port 6h/64h” trapping option. Port 60h/64h trapping allows the BIOS to provide full PS/2 based legacy support for USB keyboard and mouse. It provides the PS/2 functionalities like keyboard lock, password setting, scan code selection etc. to USB keyboards.
USB 2.0 Controller Mode	Full speed Hi-speed	Configures the USB 2.0 host controller in hi-speed (480Mbps) or full speed (12Mbps).
BIOS EHCI Hand-Off	Disabled Enabled	Enable workaround for OSes without EHCI hand-off support.
USB Beep Message	Disabled Enabled	Enable/Disable the beep during USB device enumeration.
USB Stick Default Emulation	Auto Hard disk	Select default USB Stick emulation type. Auto selects floppy or hard disk emulation based on the storage size of the USB Stick, but the emulation type can be manually reconfigured for each device using the mass storage device configuration submenu.
USB Mass Storage Reset Delay	10 Sec 20 Sec 30 Sec 40 Sec	Number of seconds the legacy USB support BIOS routine waits for the USB mass storage device after the start unit command.

21.5.9. Keyboard/mouse configuration submenu

Feature	Options	Description
Bootup Num-Lock	Off On	Specifies the power-on state of the num-lock feature on the numeric keypad of the keyboard.
Typematic Rate	Slow Fast	Specifies the rate at which the computer repeats a key that is held down. Slow sets a rate of under 8 times per second. Fast sets a rate of over 20 times per second.
PS/2 Mouse Support	Disabled Enabled Auto	Disabled will prevent the PS/2 mouse port from using system resources and will prevent the port from being active. Enabled activates the PS/2 port and the BIOS offers PS/2 mouse support. Use this setting if you always need PS/2 mouse support even when the mouse is not connected at boot-up time. Auto lets the BIOS check for a connected PS/2 mouse and enable support if one is connected.

21.5.10. Remote access configuration submenu

Feature	Options	Description
Remote Access	Disabled Enabled	Enable/Disable the BIOS remote access feature. Note: If the systems serial ports are disabled in the 'I/O Interface configuration' submenu, then serial redirection is disabled and 'Remote access configuration' menu is unavailable to the users.
Serial Port Number	COM1 COM2	Select the serial port you want to use for console redirection. Note: Only enabled serial ports are presented as an option.
Serial Port Mode	115200 8,n,1 57600 8,n,1 19200 8,n,1	Select the baud rate (transmitted bits per second) you want the serial port to use for console redirection. Note: The terminal program used with serial redirection must be set to use exact the same set of communication parameters.
Flow Control	None Hardware Software	Select the flow control for serial redirection.
Redirection After BIOS POST	Disabled Boot Loader Always	With Disabled, serial redirection functionality is disabled at the end of BIOS POST. If set to Always, all resources and interrupts associated with serial redirection are protected and not released to DOS. This option lets serial redirection permanently reside at base memory which allows the DOS console to be redirected. Note, that graphics output (VGA, SVGA, etc) from DOS programs is not redirected! If set to Boot loader, serial redirection is

Feature	Options	Description
		active during the OS boot loader process. This allows boot status messages to be redirected, but serial redirection will terminate when the OS loads.
Terminal Type	ANSI VT100 VT-UTF8	Select the target terminal type. Escape sequences representing keystrokes are sent to the remote terminal based on these settings.
VT-UTF8 Combination Key Support	Disabled Enabled	This option enables VT-UFT8 combination key support for ANSI/ VT100 terminals.
Sredir Memory Display Delay	No Delay Delay 1 Sec Delay 2 Sec Delay 4 Sec	Set the delay in seconds to display memory information if serial redirection is enabled.

21.5.11. Hardware monitoring submenu

Feature	Options	Description
H/W Health Function	Disabled Enabled	Enable hardware health monitoring device and display the readings.
Board Temperature	No option	Current board temperature.
CPU Temperature	No option	Current processor die temperature.
Fan1 Speed	No option	Current fan speed.
VcoreA	No option	Current Core A reading.
VcoreB	No option	Current Core A reading.
+3.3Vin	No option	Current 3.3V reading.
+5Vin	No option	Current 5V reading.
VBAT	No option	Current VBAT reading.

21.5.12. Watchdog configuration submenu

Feature	Options	Description
POST Watchdog	Disabled 30sec 1min 2min 5min 10min 30min	Select the timeout value for the POST watchdog. The watchdog is only active during the power-on-self-test of the system and provides a facility to prevent errors during boot up by performing a reset..
Runtime Watchdog	Disabled One time trigger Single event Repeated event	Selects the operating mode of the runtime watchdog. This watchdog will be initialized just before the operating system starts booting. If set to One time trigger the watchdog will be disabled after the first trigger. If set to Single event, every stage will be executed only once, then the watchdog will be disabled. If set to Repeated event the last stage will be executed repeatedly until a reset occurs.
Delay	See "Post watchdog"	Select the delay time before the runtime watchdog becomes active. This ensures that an operating system has enough time to load.
Event 1	NMI ACPI event Reset Power button	Selects the type of event that will be generated when timeout 1 is reached. For more information about ACPI Event see section 9.4.1 of this user's guide.
Event 2	Disabled NMI ACPI event Reset	Selects the type of event that will be generated when timeout 2 is reached.

Feature	Options	Description
	Power button	
Event 3	Disabled NMI ACPI event Reset Power button	Selects the type of event that will be generated when timeout 3 is reached.
Timeout 1	0.5sec 1sec 2sec 5sec 10sec 30sec 1min 2min	Selects the timeout value for the first stage watchdog event.
Timeout 2	See above	Selects the timeout value for the second stage watchdog event.
Timeout 3	See above	Selects the timeout value for the third stage watchdog event.

21.6. Boot setup

Select the boot tab from the setup menu to enter the boot setup screen.
In the upper part of the screen the boot setup allows you to prioritize the available boot devices. The lower part of this setup screen shows options related to the BIOS boot.

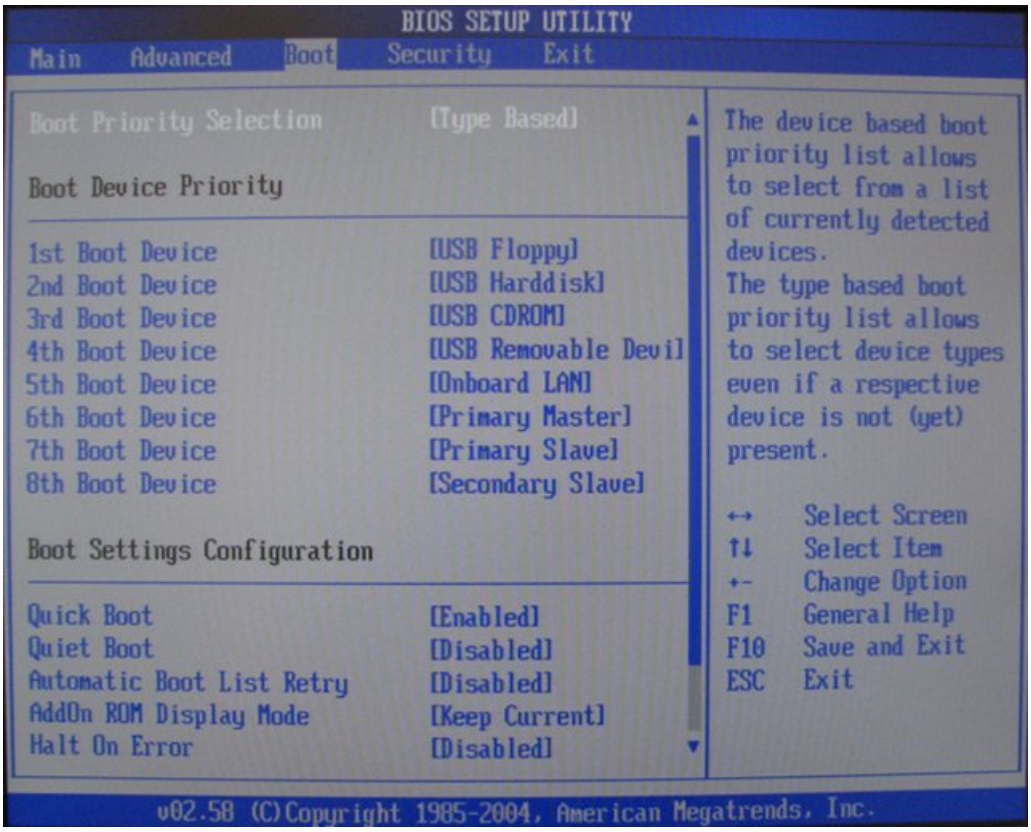

Figure 21.3: BIOS boot setup

21.6.1. Boot device priority

Feature	Options	Description
Boot Priority Selection	Device Based Type Based	Select between device and type based boot priority lists. The “device based” boot priority list allows you to select from a list of currently detected devices only. The “type based” boot priority list allows you to select device types, even if a respective device is not yet present. Moreover, the “device based” boot priority list might change dynamically in cases when devices are physically removed or added to the system. The “type based” boot menu is static and can only be changed by the user.
1st, 2nd, 3rd, ... Boot Device (Up to 12 boot devices can be prioritized if device based priority list control is selected. If “Type Based” priority list control is enabled only 8 boot devices can be prioritized.)	Disabled Primary master Primary slave Secondary master Secondary slave Legacy floppy USB hard disk USB CDROM USB removable Dev. Onboard LAN External LAN PCI mass storage PCI SCSI card Any PCI BEV device Third master Third slave	This view is only available when in the default “type based” mode. When in “device based” mode you will only see the devices that are currently connected to the system. The default boot priority is *Removables 1st, ATAPI CDROM 2nd, Hard Disk 3rd, BEV 4th* (BEV = Boot Entry Vector, e.g. network or SCSI option-ROMs).

21.6.2. Boot settings configuration

Feature	Options	Description
Quick Boot	Disabled **Enabled**	If **Enabled**, some POST tasks will be skipped to speed up the BIOS boot process.
Quiet Boot	**Disabled** Enabled	**Disabled** displays normal POST diagnostic messages. **Enabled** displays OEM logo instead of POST messages. **Note**: The default OEM logo is a dark screen.
Automatic Boot List Retry	**Disabled** Enabled	Automatically retry boot list if end of list is reached and no boot device found.
AddOn ROM Display Mode	Force BIOS **Keep current**	Set display mode for option ROM.
Halt On Error	**Disabled** Enabled	Determines whether the BIOS halts and displays an error message if an error occurs. If set to **Enabled** the BIOS waits for user input.
Hit 'DEL' Message Display	Disabled **Enabled**	Allows/Prevents the BIOS to display the '*Hit Del to enter setup'* message.
Interrupt 19 Capture	**Disabled** Enabled	Allows/Prevents the option ROMs (such as network controllers) from trapping the boot strap interrupt 19.
PXE Boot to LAN	**Disabled** Enabled	Disable/Enable PXE boot to LAN **Note**: When set to 'Enabled', the system has to be rebooted in order for the Intel boot agent device to be available in the boot device menu.

21.7. Security setup

Select the security tab from the setup menu to enter the security setup screen.

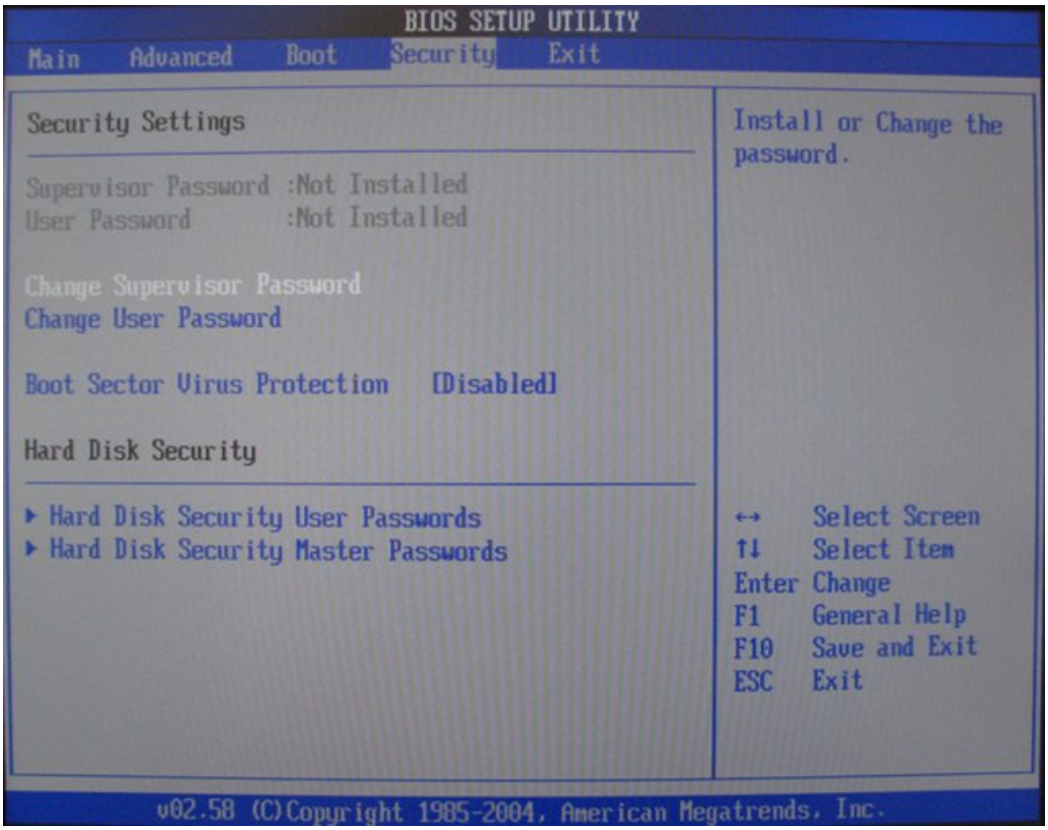

Figure 21.2: BIOS security setup

21.7.1. Security Settings

Feature	Options	Description
Supervisor Password	Not installed	Reports if there is a supervisor password set.
User Password	Not installed	Reports if there is a user password set.
Change Supervisor Password	Enter password	Specifies the supervisor password.
Change User Password	Enter password	Specifies the user password.
Boot Sector Virus Protection	Disabled Enabled	Select Enabled to enable boot sector protection. The BIOS displays a warning when any program (or virus) issues a disk format command or attempts to write to the boot sector of the hard disk drive. If enabled, the following appears when a write is attempted to the boot sector. You may have to type N several times to prevent the boot sector write. *Boot Sector Write!* *Possible VIRUS: Continue (Y/N)?* The following appears after any attempt to format any cylinder, head or sector of any hard disk drive via the BIOS INT13 hard disk drive service: *Format!!!* *Possible VIRUS: Continue (Y/N)?*

21.7.2. Hard disk security

This feature enables the users to set, reset or disable passwords for each hard drive in setup without rebooting. If the user enables password support, a power cycle must occur for the hard drive to lock using the new password. Both user and master password can be set independently however the drive will only lock if a user password is installed.

Hard disk security user password

Feature	Options	Description
Primary/Master/ Slave HDD User Password	Enter password	Set or clear the user password for the hard disk. Note: This option will be shaded if the hard drive does support the Security Mode Feature set but user failed to unlock the drive during BIOS POST.

21.8. Exit menu

Select the Exit tab from the setup menu to enter the exit setup screen.

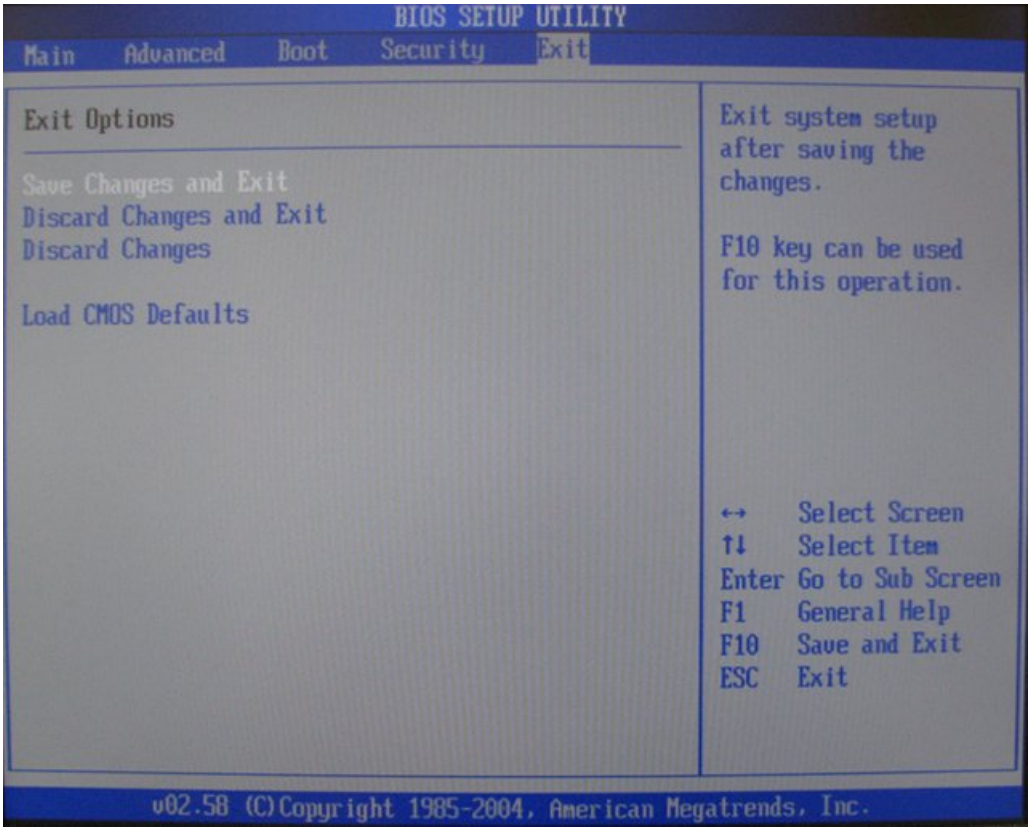

Figure 21.3: BIOS exit menu

Feature	Description
Save Changes and Exit	Exit setup and reboot so the new system configuration parameters can take effect.
Discard Changes and Exit	Exit setup without saving any changes made in the BIOS setup program.
Discard Changes	Discard changes without exiting setup. The option values presented when the computer was turned on are used.
Load CMOS Defaults	Load the CMOS defaults of all the setup options.

21.9. Additional BIOS features

The DLoG MPC 6 uses a AMIBIOS that is stored in an onboard Flash ROM chip and can be updated using the CGUTL System Utility, which is available in a DOS based command line, Win32 command line, and a Win32 GUI version.

The BIOS displays a message during POST and on the main setup screen identifying the BIOS project name and a revision code. The initial production BIOS is identified as M6IxxCyy, where M6 means MPC6, xx means the revision of the VGA BIOS and yy is the version of the BIOS.

21.9.1. Updating the BIOS

The hardware of the MPC 6 lets you update the system BIOS without opening the unit. You should only update the BIOS if the BIOS in your DLoG MPC 6 is serverely corrupted. During the update operation, the power supply to the unit must not be interrupted. Should this happen, the unit needs to be sent in for repairs.

Updating the BIOS under DOS

When booting into MS-DOS, do not start any network driver or memory management programs such as EMM368 or HIMEN.

1. Boot into MS-DOS.
2. Create a RAM disk.
3. Copy CGUTLCMD.EXE and the current binary file to this RAM disk.
4. Start the update with the following command:
   `cgutlcmd bflash `name of the binary-file´ /c`

The update is carried out without further confirmation and the computer is restarted.

After completing the update, the settings described below need to be configured in the BIOS Setup Utility menu.

Page	Item	Setting
Exit	<Load CMOS Defaults>	No setting possible
Main Setup Page	Save and Exit with <F10> <OK>	No setting possible

Updating the BIOS under Windows

1. Boot up MS-Windows.
2. Start the CGUTLGUI.EXE.

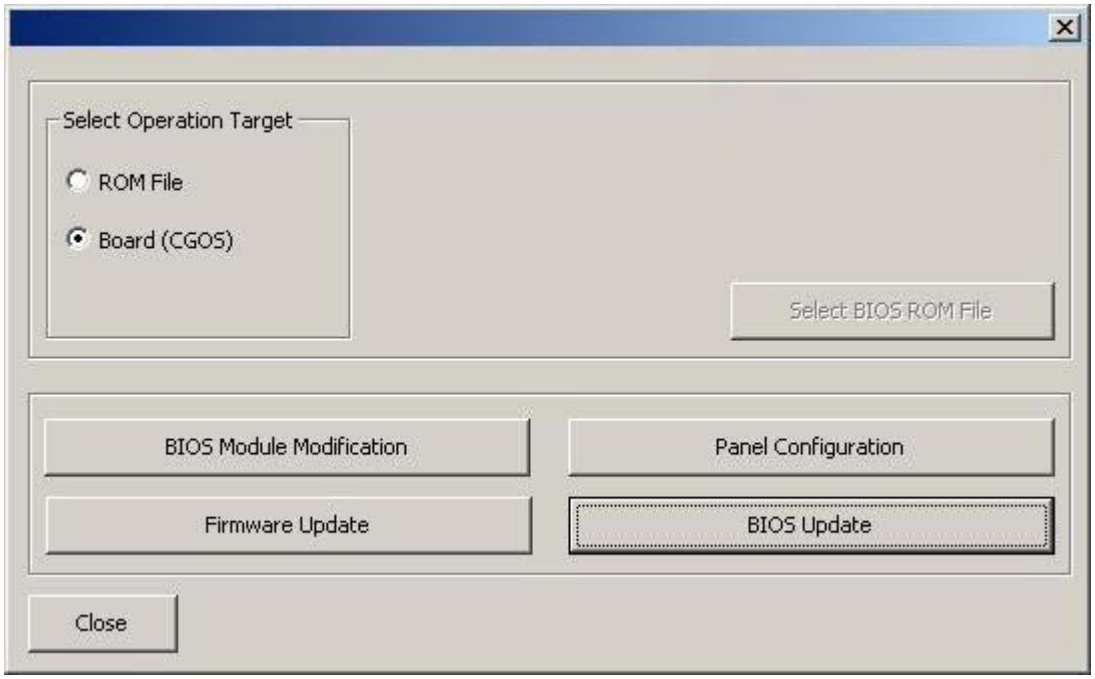

Figure 21.4: BIOS updating under Windows 1

3. Select Board (CGOS) on the Select Operation Target menu.
4. Select Bios Update.

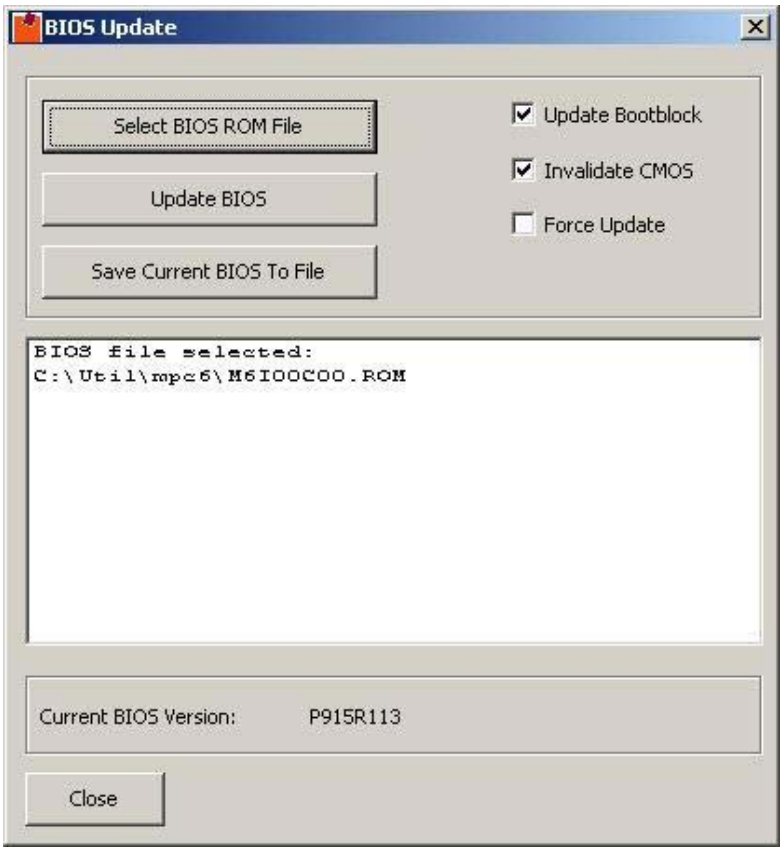

Figure 21.7: BIOS updating under Windows 2

5. Click Select BIOS ROM file and choose the current binary file.
6. Select Update Bios.
7. The update is carried out without further confirmation.
8. Then restart the DLoG MPC 6.

After completing the update, the settings described below need to be configured in the BIOS Setup Utility menu.

Page	Item	Setting
Exit	<Load CMOS Defaults>	No setting possible
Main Setup Page	Save and Exit with <F10> <OK>	No setting possible

21.10. BIOS recovery

The BIOS recovery scenario is recommended for situations when the normal flash update fails and the user can no longer boot back to an OS to restore the system. The code that handles BIOS recovery resides in a section of the flash referred to as “boot block”.

In order to make a BIOS recovery from a USB device (floppy, USB Stick) the BIOS file must be copied into the root directory of the storage device and renamed to AMIBOOT.ROM. Then boot from the device.

The BIOS issues a series of 4 beeps that indicate that the system BIOS ROM file has successfully been updated.

After that the system will automatically reset and reboot.

If the boot block of the BIOS is corrupted the recovery scenario as described here will not be possible. In this situation the unit needs to be sent in for repair.

21.11. BIOS security features

The BIOS provides both a supervisor and user password. If you use both passwords, the supervisor password must be set first. The system can be configured so that all users must enter a password every time the system boots or when setup is executed.

The two passwords activate two different levels of security. If you select password support you are prompted for a one to six character password. Type the password on the keyboard. The password does not appear on the screen when typed.

The supervisor password (supervisor mode) gives unrestricted access to view and change all the setup options. The user password (user mode) gives restricted access to view and change setup options.

If only the supervisor password is set, pressing <Enter> at the password prompt of the BIOS setup program allows the user restricted access to setup.

Setting the password check to 'Always' restricts who can boot the system. The password prompt will be displayed before the system attempts to load the operating system. If only the supervisor password is set, pressing <Enter> at the password prompt allows the user to boot the system.

21.12. Hard disk security features

Hard disk security uses the security mode feature commands defined in the ATA specification. This functionality allows users to protect data using drive-level passwords. The passwords are kept within the drive, so data is protected even if the drive is moved to another computer system.

The BIOS provides the ability to 'lock' and 'unlock' drives using the security password. A 'locked' drive will be detected by the system, but no data can be accessed. Accessing data on a 'locked' drive requires the proper password to 'unlock' the disk.

The BIOS enables users to enable/disable hard disk security for each hard drive in setup. A master password is available if the user can not remember the user password. Both passwords can be set independently however the drive will only lock if a user password is installed. The max length of the passwords is 32 bytes.

During POST each hard drive is checked for security mode feature support. In case the drive supports the feature and it is locked, the BIOS prompts the user for the user password. If the user does not enter the correct user password within five attempts, the user is notified that the drive is locked and POST continues as normal. If the user enters the correct password, the drive is unlocked until the next reboot.

In order to ensure that the ATA security features are not compromised by viruses or malicious programs when the drive is typically unlocked, the BIOS disables the ATA security features at the end of POST to prevent their misuse. Without this protection it would be possible for viruses or malicious programs to set a password on a drive thereby blocking the user from accessing the data.

22. Return packing slip

Return packing slip (please fill in once per return shipment):

Company	
Street	
Zip code, town	
Contact	
Phone number	

Type(s) of unit(s) returned:

Serial number(s) of the unit(s) returned:

[ ] The units have not been returned, as they are currently being used. However, the following parts are missing:

[ ] Unit was already damaged on delivery (please enclose a copy of the delivery note)

[ ] Delivery was incomplete

Missing parts:

[ ] The following error occurs when operating the unit:

[ ] Separate error report is enclosed

Index

16550A compatible 21
24-key keypad 49
30 AT fuse 58
32 Bit Data Transfer 179
4-wire touch 19
8-wire touch 19
Abbreviations 16
AC /DC power pack 112
AC power pack 57
AC power supply, internal 25
AC voltage supply connector 41
Accident prevention regulations 4, 149
ACPI 2.0 Features 169
ACPI APIC support 169
ACPI Aware O/S 169
Active State Power Management 174
ADC/MDC connection 23
ADC/MDC interface 23
ADC/MDC properties 23
Additional loads 114
Additonal BIOS features 195
AddOn ROM Display Mode 190
Adhesion 102
Advanced BIOS setup screen 168
Afterimage 47
Airplanes 14
Allocate IRQ to PCI VGA 170
Aluminum-cast housing 19
Ambient conditions 28, 106
Ambient temperature 5, 28
AMIBIOS 195
Ampacity 114
Analog touch connection 22
Analog touch controller 22
Analog touch screens 22
Antenna cap 9
Antenna fitting 19
Antenna solutions 46
APIC ACPI SCI IRQ 174
Area of application 4, 15, 16
Async DMA 177
ATA/IDE Configuration 176
Audio 128
Automatic Boot List Retry 190
Automatic heating 105
Automatic shutdown 105
Automatic shutdown software 71, 110
Automatic switch-off 106
Automatic switch-off and heating 105
Backlight 66, 68
Backspace key 69
Barcode scanners 82
Battery 20, 60
Battery replacement 10
Baud rate 82
BIOS 20, 164
BIOS boot setup screen 188
BIOS EHCI Hand-Off 181
BIOS exit setup screen 194
BIOS ID 167
BIOS main setup screen 166
BIOS navigation 165
BIOS PCI Configuration Submenu 170
BIOS recovery 199
BIOS security features 199
BIOS Security Settings 192
BIOS setup program 164
BIOS updating 195
Block (Multi-Sector Transfer) 178
Block Mode 177
Board Temperature 185
Board Version MPC6.20 06.2006 1
Boot Counter 167
Boot Device 189
Boot Display Device 172
Boot Priority Selection 189
Boot Sector Virus Protection 192
Bootup Num-Lock 182
Brightness adjustment 19
Brightness control 66
Bundesnetzagnetur 46
Burning in a motionless image 47
Bus master-capable PCI slot 103
Bussman 27
C partition 72
Cable connections 8
Cable cover 19, 44, 61, 63
Cable diagrams 42
Cable duct 63
Cable labeling 113
Cable ties 62
Cables 62, 113
Cache 20
Calibration 95, 98, 100
Car battery 6
Cardbus 23
Cardbus connectors 124
Cardbus controller 23
Cardbus slot 23
Cathode rays 47
cd/m^2 19
CD-ROM drive 51
CE 29
CE Marking 12
Center of gravity 158
CF Cards 20
CGUTL system utility 195
Changing the device 16
Charging the car battery 6
Chassis 59
Chemical substances 101
Chipset 20, 84
Chipset configuration 174
Choice of location 4
Circuit breaker 5, 47, 57, 58

Clamp foots ... 54
Class B ... 13
Cleaning/servicing the device ... 6
Cling wrap ... 37
Closing the device ... 9
Color depth ... 22
COM1 ... 79, 120
COM1 as a power supply ... 79
COM1 options ... 79
COM2 ... 79, 121, 127
COM2 options ... 80
COM3 ... 79
COM4 ... 79
Combination connector ... 21
Common mistakes in usage ... 112
Compact Flash capacity ... 72
Compact Flash connector ... 130
Compact Flash type I/II ... 20
Compensation currents ... 83
Compressed air ... 111
Config program ... 110
Connecting cables ... 59, 60
Connecting/disconnecting external devices ... 43
Connector bay ... 59
Converters ... 60
Cooling ... 38
Cooling air ... 5, 38
Cooling concept ... 5, 38
Cover hood of the wireless card ... 113
CPU ... 20
CPU configuration submenu ... 174
CPU Temperature ... 185
Damaged parts ... 6
Damaged power cable ... 6
Data cables ... 6
Data transfer rates ... 46
DC power pack ... 58, 105, 112
DC use ... 58
DC voltage supply connector ... 41
DC+ - connecting cables ... 58
DDR2 technology ... 20
Delamination ... 102
Delay ... 186
Delay time ... 71, 110
Depth-wise adjustment ... 156
Design elements ... 2
Design method ... 2
Device ... 177
Device description ... 15
Device model ... 7, 25
Device seal ... 9
Device type plate ... 7, 17
Dimensions ... 30
Direct current power pack, internal ... 25, 26
Disconnecting device ... 47
Display ... 46, 47
Display and temperature ... 28
Display configuration ... 76
DLoG Config program ... 110
DLoG drivers ... 84, 86, 89
DLoG MPC 6 toolkit ... 150
DLoGPwr.sys driver ... 109
DMA Mode ... 178
DSYSINFO ... 76
DVMT Mode Select ... 172
DVMT/FIXED Memory ... 172
EIRP ... 46
Elastomer springs ... 155, 158, 159, 160
Electrically-isolated input/outputs ... 23
Electrocution ... 6, 7
Elu ... 27
Emergency operation ... 6
Emergency shut-off switch ... 114
EMM368 ... 196
EN 61000-4-2 ... 21
EN 954-1 ... 4
EN test marks ... 29
Enhanced Write Filter ... 72
Environment controller ... 21, 77
ESD level 4 ... 21
ESD protected area ... 11
ESD safe ... 19
Event 1 ... 186
Event 2 ... 186
Event 3 ... 187
EWF partition ... 72
Excess temperature in the unit ... 68
Excitation frequency ... 155, 161
Exit BIOS setup ... 194
Expansion cards ... 20, 103
Extending modules ... 10
External connectors
  Overview ... 39
External connectors ... 119
External peripheral devices ... 7
Extreme temperatures ... 114
Face ... 9
Fan ... 21
Fan1 Speed ... 185
FCC regulations ... 13
Fedora Core 5 ... 75
File errors ... 112
Flashdisk ... 29
Flat Panel Scaling ... 173
Flat Panel Type ... 173
Floppy disk drive ... 21, 52
Flow Control ... 183
Fork lift ... 162
Forklift applications ... 59
Forklift chassis ... 59
Forklift motors ... 60
Frequency band ... 46
Fresh air ... 5
Front attachment ... 9
Front keyboard connector ... 132
Function keys ... 69
Fuse ... 6, 10, 58
Graphic card driver ... 86
Ground bolts ... 59
Ground loops ... 83
Ground potential ... 83
GSM ... 24

Guarantee ... 9
H/W Health Function ... 185
Halt On Error ... 190
Hampshire touch screen driver ... 94
Hard disk security ... 193
Hard disk security features ... 200
Hard Disk Write Protect ... 176
Hard drive capacity ... 72
Hard drives ... 20
HDOSCALB.EXE ... 95
Heat ... 38
Heating ... 71, 105
Heating power connectors ... 127
Hexagonal screws ... 9
High-pressure cleaner ... 111
HIMEN ... 196
Hit 'DEL' Message Display ... 190
Hospitals ... 14
IDE Configuration ... 176
IDE connector ... 129
IDE Detect Time Out (s) ... 176
IDE interface ... 20
IEEE.802.11b standard ... 46
Ignition ... 41, 105, 106
Ignition connecting cables ... 58
Ignition input ... 105
Ignition signal ... 47, 71
Ignition signal connector ... 126
Image quality ... 111
Image quality deterioration ... 8
Inferior temperature in the device ... 68
Initial operation ... 5
Input current for each consumer ... 11
Input voltage ... 58
Input voltage connector ... 126
Input voltage of the DLoG MPC 6 ... 6
Inputs ... 23
Installation environment ... 5
Installing components ... 10
Insulation effects ... 161
Intended usage ... 16
Interconnector ... 59
Interference ... 13
Internal connectors ... 124
Internal connectors, motherboard MPC6.20 ... 123
Internal connectors, riser card ... 135
Internal temperature ... 106
Internal VGA Mode Select ... 172
Interrupt ... 79
Interrupt 19 Capture ... 190
Inverter connector ... 132
IOAPIC ... 174
IP54 ... 19
IP65 ... 9, 19, 61, 112
IPC/HPC/MPC drivers, CD-ROM ... 74
IRQ xx ... 171
Jumper battery ... 145
Jumper COM1 configuration ... 147
Jumper Compact Flash configuration ... 145
Jumper Ethernet configuration ... 145
Jumper external shield connection ... 148
Jumper LCD configuration ... 147
Jumper positions ... 143
Jumper touch configuration ... 146
Jumper touch enable ... 146, 148
Jumper warnings ... 143
Key switch of the ignition ... 105
Keyboard ... 43, 48, 119
Keyboard connection ... 21
Large electrical loads ... 60
LBA Mode ... 177
LBA/Large Mode ... 178
LCD connector ... 131
LCD/CRT interface ... 22
LCD/CRT operation ... 22
LEDs ... 68
Legacy USB Support ... 180
Liability claims ... 9
Life-support systems ... 4
Linux ... 22, 75
Linux operating system ... 75
Liquid crystal molecules ... 47
Lithium ion battery ... 10
Littelfuse ... 27
Local Flat Panel Type ... 173
Logic ground ... 59
Maintenance ... 111
Manual brightness control ... 68
Mechanical ... 19
Mechanical dynamic loading ... 152
Memory effect ... 47
Memory Hole ... 174
Memory stick ... 74
Metal splinters ... 8
Methods for emphasis ... 3
Mini DIN connector ... 21
Model range ... 17
Models ... 16
Moisture ... 8
Motherboard ... 11, 20
Motherboard battery ... 10
Motherboard MPC6.20 internal connectors ... 123
Motherboard, jumper layout ... 144
Mounting bracket ... 155
Mounting bracket toolkit ... 151
Mounting brackets ... 54
Mouse ... 50, 119
Mouse connection ... 21
MPCCOM ... 77
MPCCOM.EXE ... 110
MS-DOS ... 75
MS-DOS 6.x ... 22
MS-DOS operating system ... 75
Multiple power sources ... 60
Natural frequency ... 154, 155, 163
Natural oscillations ... 154
Natural rubber ... 159
Neck collar screws ... 63
Network adapter ... 88
Network connection ... 23, 43
Network connector ... 122
Network controller ... 23

Nominal current ... 25
Number keys ... 69
OEM Version ... 167
Onboard Audio Controller ... 175
Onboard Ethernet Controller ... 175
Onboard sound adapter ... 91
Opening seal ... 63
Opening the device ... 8
Operating states ... 71
Operating system image ... 74
Operating system installation ... 73
Operating systems on floppy disk ... 74
Operating systems supplied on CD-ROM ... 73
Operating temperature ... 28
Operation ... 64
Output DC power packs ... 58
Outputs ... 23
Overheating ... 5, 38
Pacemakers ... 14
Packaging ... 37
Parallel Port Address ... 175
Parameter settings in the registry ... 109
Password ... 199
PCI bus ... 23
PCI connector ... 136
PCI Express Port 1 ... 174
PCI Interrupt Routing ... 170
PCI IRQ Resource Exclusion ... 170
PCI Latency Timer ... 170
PCI slot ... 20
PCIe MiniCard ... 24
PCIe MiniCard slot ... 24
PCIe MiniCard socket ... 142
Peripheral devices ... 7, 26, 43, 60
Phoenix Contact plug ... 58
Pin configuration ... 39
PIO Mode ... 177, 178
PIO Mode 3/4 ... 20
PIRQ xx (devices) ... 171
Plug & Play O/S ... 170
Port 64/60 Emulation ... 181
POST ... 164, 200
POST Watchdog ... 186
Power consumption ... 26
Power key ... 67
Power supply ... 7, 8, 25, 43, 57
Power supply cables ... 5
Power supply connector ... 5
Power supply fuses ... 27
Power switch ... 57, 112
Powering down ... 112
Powering up ... 47
Powering up/down ... 112
Pre-installed operating system ... 72
Primary IDE Master ... 176
Primary IDE Slave ... 176
Primary Video Device ... 172
Primary/Master/Slave HDD User Password ... 193
Printers ... 60, 81
Processor Info Block ... 174
Protection class ... 4
Protection class IP65 ... 9, 61, 112
Protective film ... 46
PS/2 ... 48
PS/2 mouse ... 50
PS/2 Mouse Support ... 182
PS/2-Wedges ... 60
PXE Boot to LAN ... 190
Qualified personnel ... 1
Quick Boot ... 190
Quiet Boot ... 190
Radio frequencies ... 14
Radio frequency energy ... 14
Radio frequency exposure ... 13
Radio performance ... 5, 45
Radio wave reception ... 13
RAM ... 20
RAM mount elements ... 54
Real-time clock ... 20
Receiving antenna ... 13
Redirection After BIOS POST ... 183
References ... 3
RegTP ... 46
Remote Access ... 183
Repairs ... 7
Replacing modules ... 10
Resistance of the touch screen ... 101
Resistive touch screen ... 93
Resolution ... 22
Resonance deflections ... 160
Resources for the serial ports ... 79
Retighten screws ... 63
Return packing slip ... 201
Returning your device ... 37
Ring tongues ... 59
Riser card ... 20, 103
Riser card connector ... 134
Riser card with 1x PCI ... 104
Risk of injury ... 5
RJ45 plug-in connector ... 23
RJ45 port ... 88
Roof mounting ... 54
RS-232 ... 21
RS232 mouse ... 50
RS-422 ... 80
RS-485 ... 80
RTTE Directive 1999/5/EC ... 12
Rubber buffers ... 155, 160
Runtime Watchdog ... 186
S.M.A.R.T ... 177, 178
Safety notices ... 4, 16
Scanner ... 43, 53, 82
Schurter ... 27
Scope of delivery ... 37
Scratches ... 8
Seal ... 9
Security Settings ... 192
SELV circuit ... 25, 58
Serial number ... 17
Serial Port 1/2 Configuration ... 175
Serial Port 3/4 Configuration ... 175
Serial Port Mode ... 183

Serial Port Number 183
Serial port printers 81
Serial ports 21, 79
Serial ports, tips & tricks 83
Shield ground 59
Shift key 69
Siba 27
Slot bracket 103
SMALL keyboard 48, 49
Software 22
Software Wedge 82
Special keys 69
Special regulations in France 12
Splash guard 19
Sredir Memory Display Delay 184
Standard jumper settings 143
Standard plug 57
Start-up problems 51, 60
Steering wheels 54
Storage temperature 28
Strain relief rail 37, 61, 62, 113
Sulfurous Agents 111
Supervisor 199
Supervisor Password 192
Supply cable 42, 113
Supply voltage cable 59
Supply voltage lines 57
Surface 8
SUSE distribution 75
SUSE Linux 10.1 73
Switch 5
System Date 167
System overloads 11
System resources 116
System Time 167
System tuned to a high frequency 154
System tuned to a low frequency 155
Temperature 28
Temperature ranges 114
Temperature sensor 71
Temperature warning, hot 71
Temporary cap 9
Terminal Type 184
Test marks 29
TFT display 47
Timeout 187
Tools 149
Torque wrench 8, 9
Total spring constant 155
Touch connector 133
Touch controller 22
Touch screen 8, 19, 22, 93, 114
Touch screen cleaning 111
Touch screen controller 93
Touch screen pencil hardness test 102
Touch screen resistance 101
Touch screen resistance to chemical substances 101
Touch screen surface 111
Transmission function 161
Transmitting power 5, 45
TTL levels 140
Turning off the display 47
TweakUI 76
Twisted-pair cable 83
Type identification 17
Type of Device 177
Type plate 7
Typematic Rate 182
UDMA/33 20
Ultra DMA 177
Ultra-short cards 103
ULV 20
UMTS 24
Unbalanced machine 162
USB 120
USB 2.0 Controller 180
USB 2.0 Controller Mode 181
USB 2.0 High Speed 24
USB 2.0 HiSpeed 21
USB 3.5 floppy disk drive 21
USB Beep Message 181
USB connection 21
USB Functions 180
USB Keyboard Legacy Support 180
USB Mass Storage Reset Delay 181
USB mouse 50, 93
USB Mouse Legacy Support 180
USB Port 51
USB post 3 and 4 141
USB stick 53
USB Stick Default Emulation 181
USB Storage Device Support 180
USB-CD-ROM 51
User Password 192
Vacuum cleaner 111
VcoreA 185
VcoreB 185
Vehicle applications 59
Vehicle chassis 60, 162
Vendor 177
VGA adapter 86
VGA controller 22
Vibration insulation 154, 155
Vibration shock 29
Vibrations 154
Voltage range 26
VT-UTF8 Combination Key Support 184
Vulcanized fittings 160
Wall mounts 54
Waste heat 5, 38
Week of manufacture 17
Weight 19
Wickmann 27
Windows XP Embedded 22, 75
Windows XP Professional 22
Windows XP/SP1 73
Wireless card 53, 113
Wiring 6, 7
WLAN 802.11b 12
WLAN cards 53
WLAN settings 45
WM_QUERYENDSESSION 110

WORDPAD.EXE 110
Y cable 50, 119
Y cable for PS/2 keyboard and mouse..... 21