Paxton

ins-30212

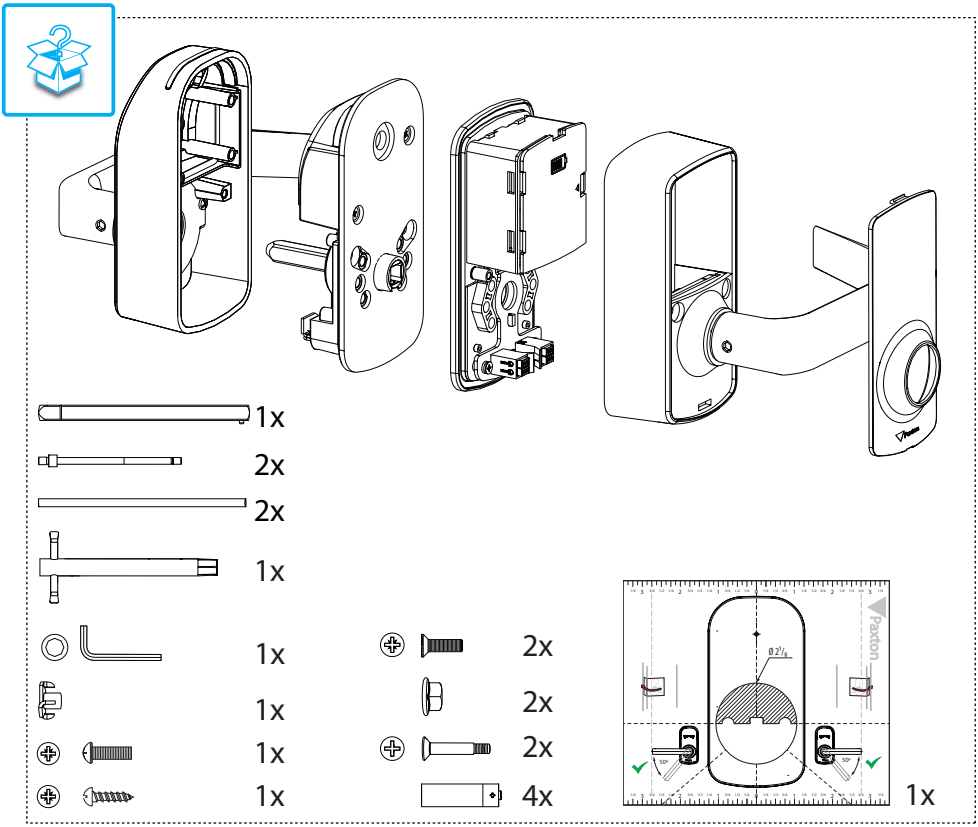
1x
2x
2x
1x
1x
1x
1x
1x
2x
2x
2x
4x
Paxton
1x

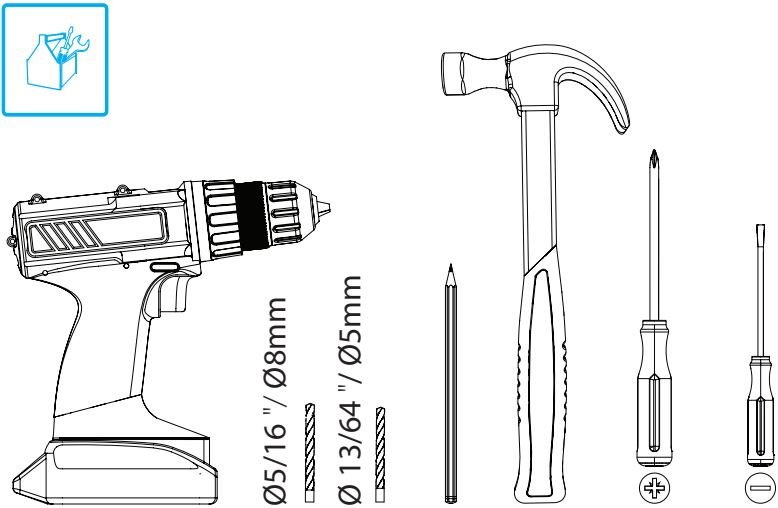
Ø5/16 " / Ø8mm
Ø 13/64 " / Ø5mm

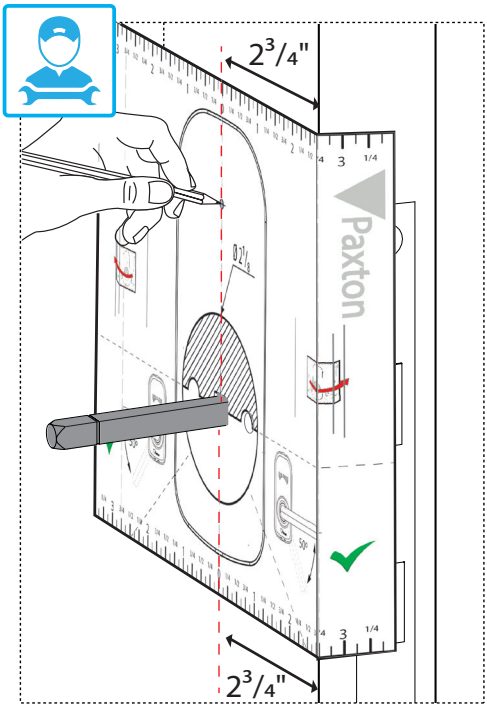
2³/₄"
Paxton
2³/₄"

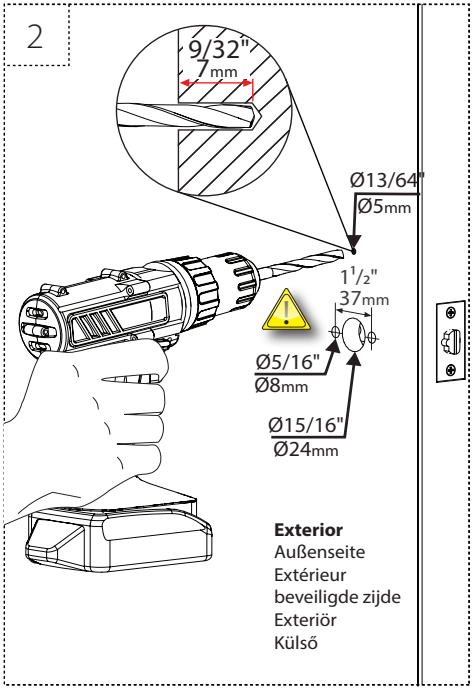
2
9/32"
7mm
Ø13/64"
Ø5mm
1¹/₂"
37mm
Ø5/16"
Ø8mm
Ø15/16"
Ø24mm
Exterior
Außenseite
Extérieur
beveiligde zijde
Exteriör
Külső

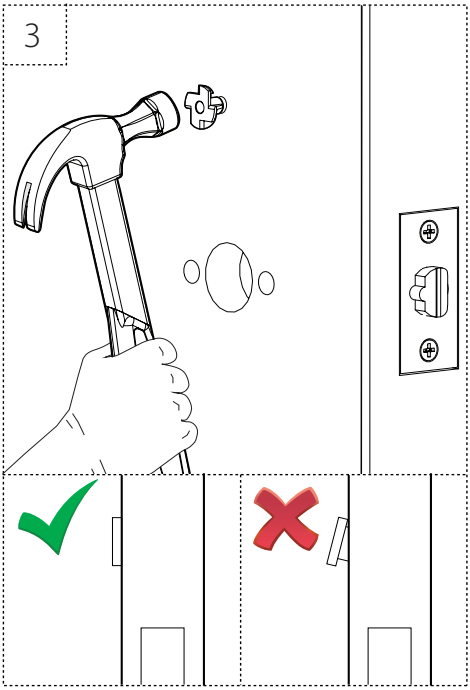
3

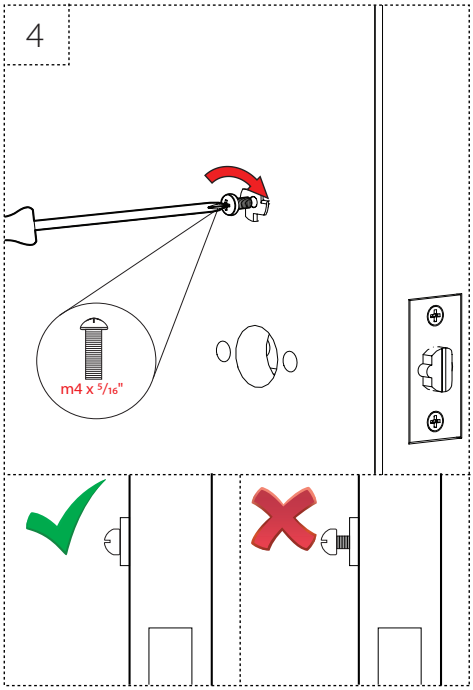
4
m4 x ⁵/₁₆"

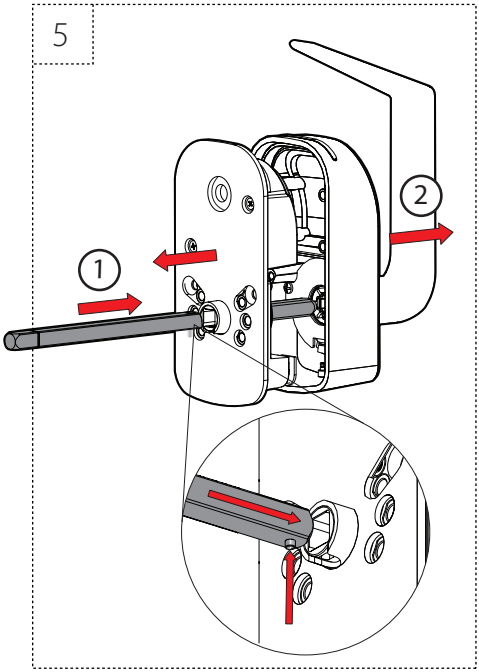
5
1
2

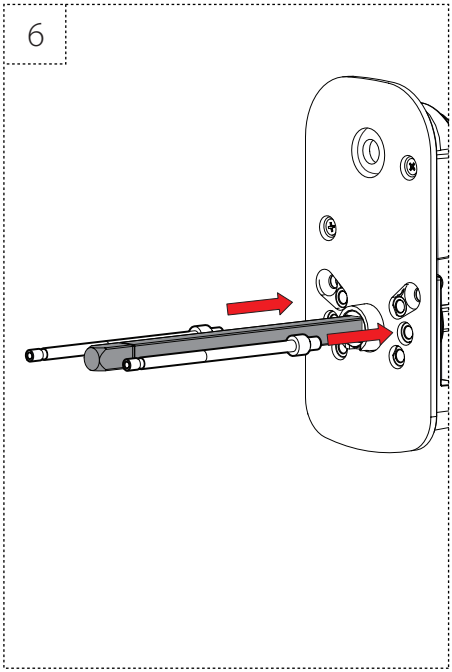
6

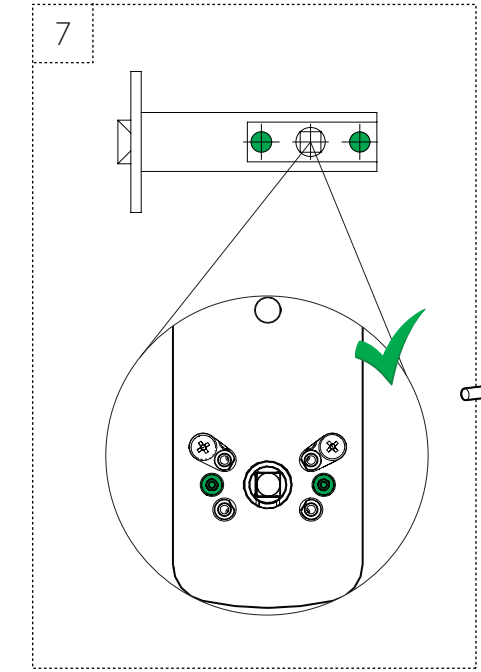
7

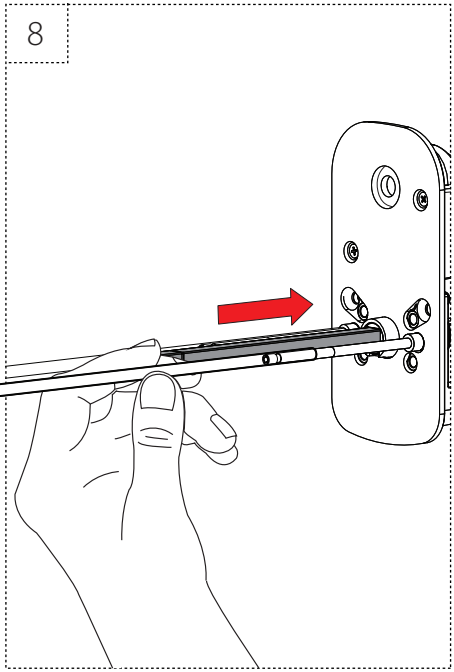
8

9

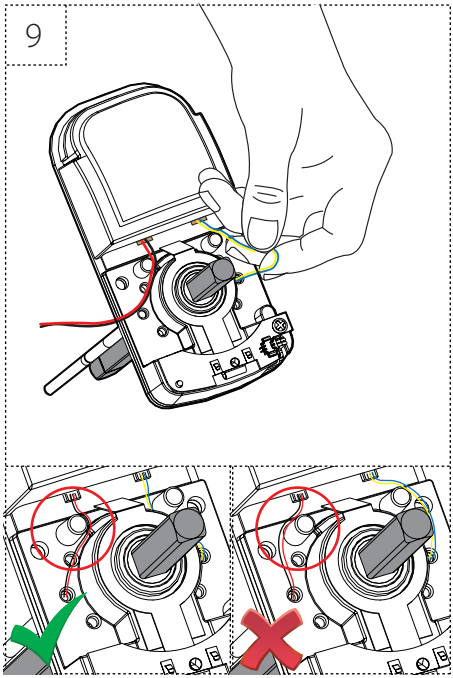

10

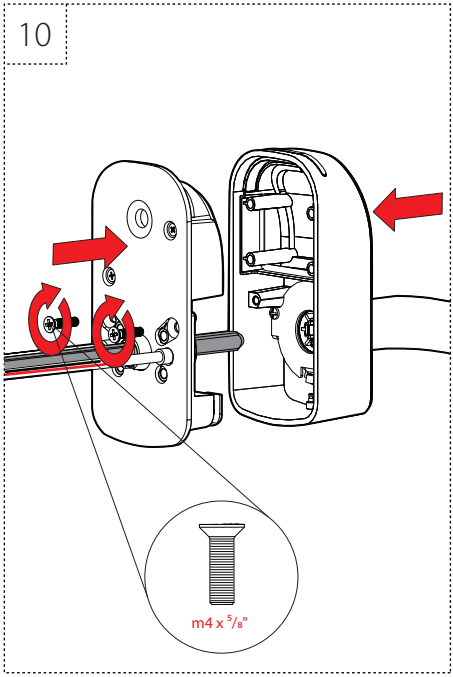

11

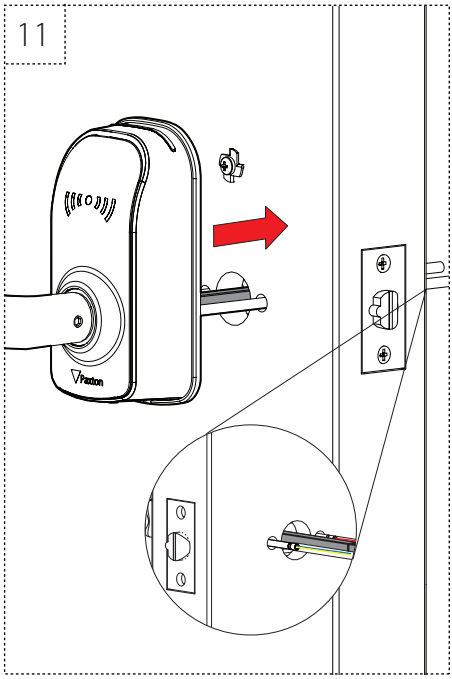

12

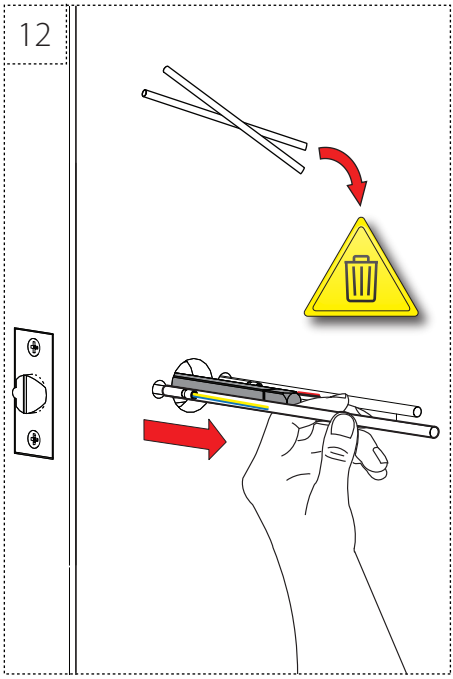

13

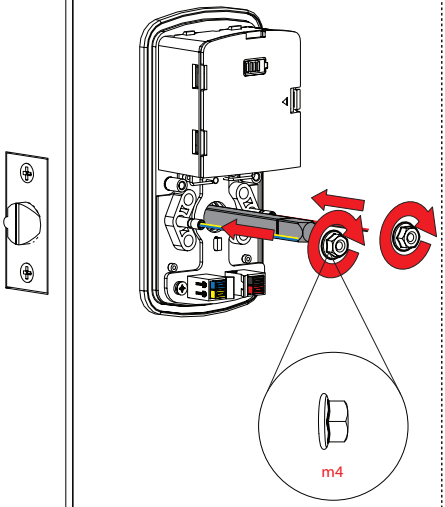

14

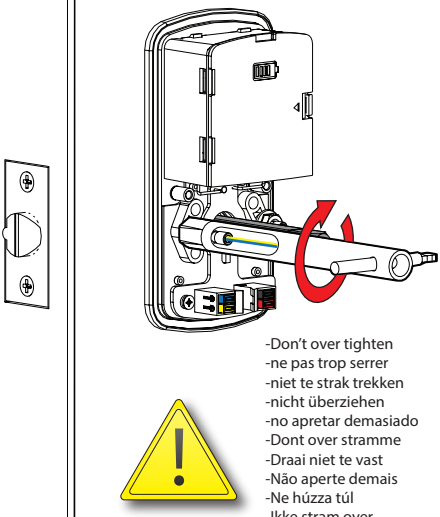

-Don't over tighten
-ne pas trop serrer
-niet te strak trekken
-nicht überziehen
-no apretar demasiado
-Dont over stramme
-Draai niet te vast
-Não aperte demais
-Ne húzza túl
-Ikke stram over

15

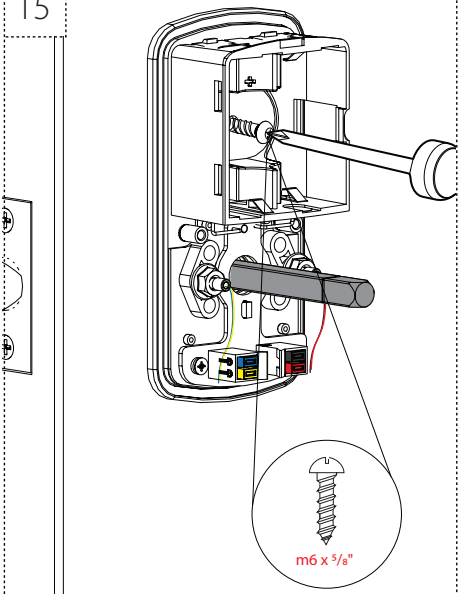

16

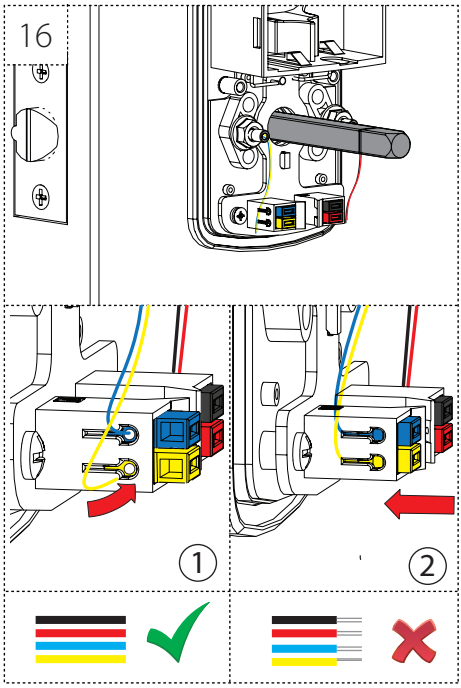

17

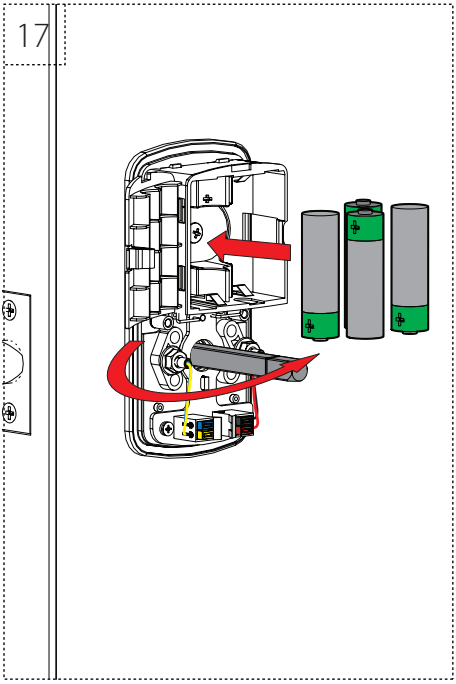

18

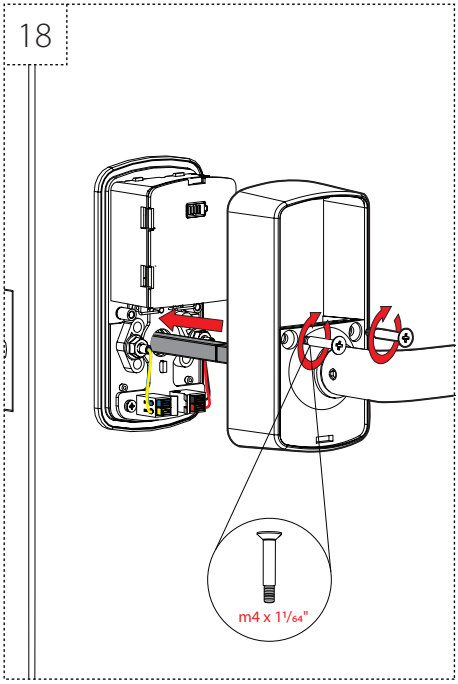

19

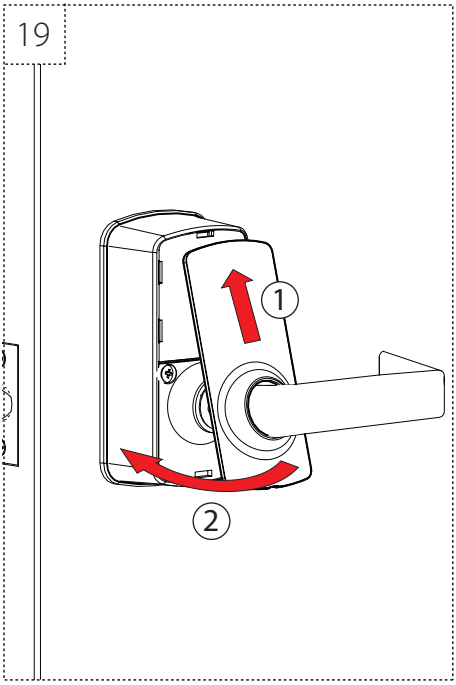

20

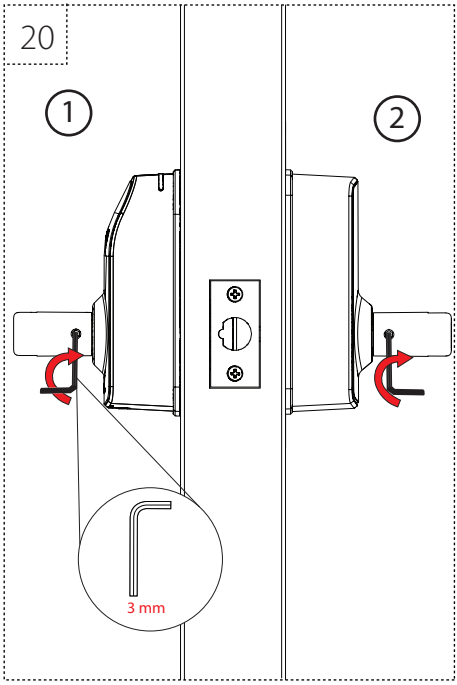

1

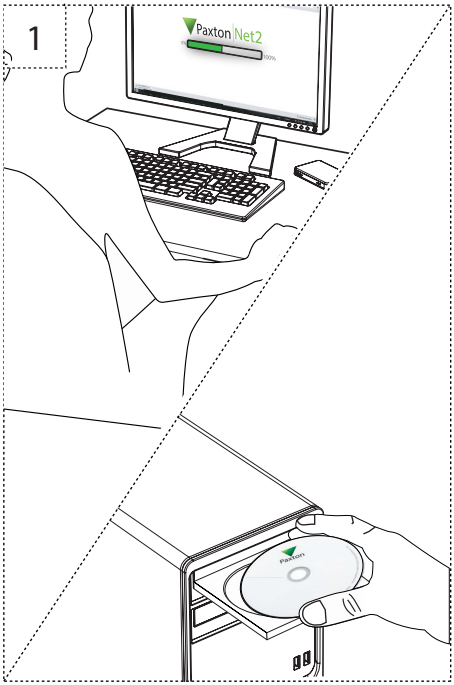
Paxton Net2
Paxton

2

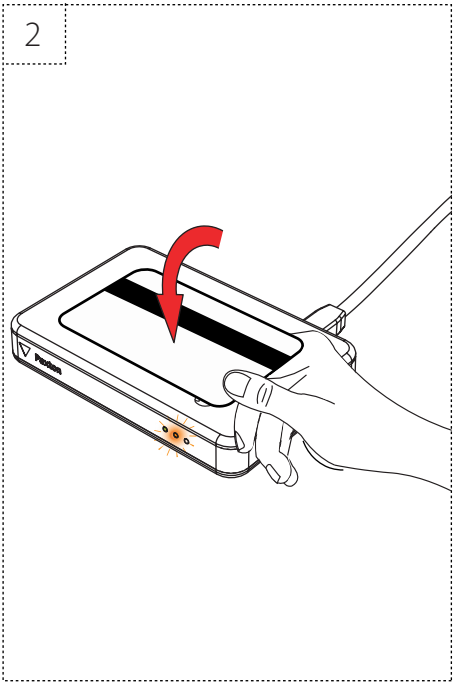
Paxton

3

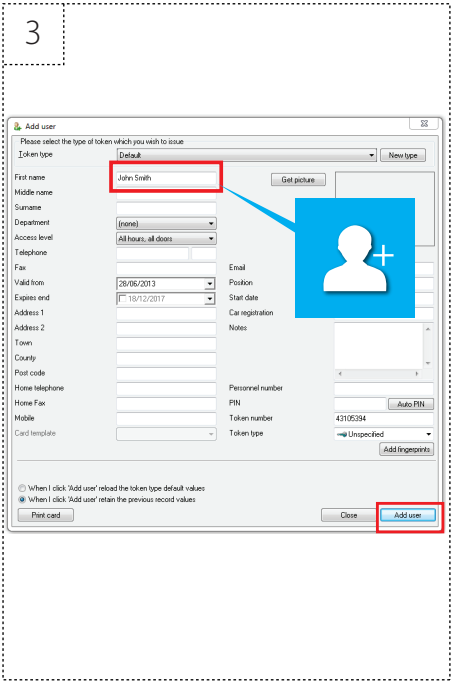
Add user
Please select the type of token which you wish to issue
Token type
Default
New type
First name
John Smith
Get picture
Middle name
Surname
Department
(none)
Access level
All hours, all doors
Telephone
Fax
Email
Valid from
28/06/2013
Position
Expires end
18/12/2017
Start date
Address 1
Car registration
Address 2
Notes
Town
County
Post code
Home telephone
Personnel number
Home Fax
PIN
Auto PIN
Mobile
Token number
43105394
Card template
Token type
Unspecified
Add fingerprints
When I click 'Add user' reload the token type default values
When I click 'Add user' retain the previous record values
Print card
Close
Add user

4

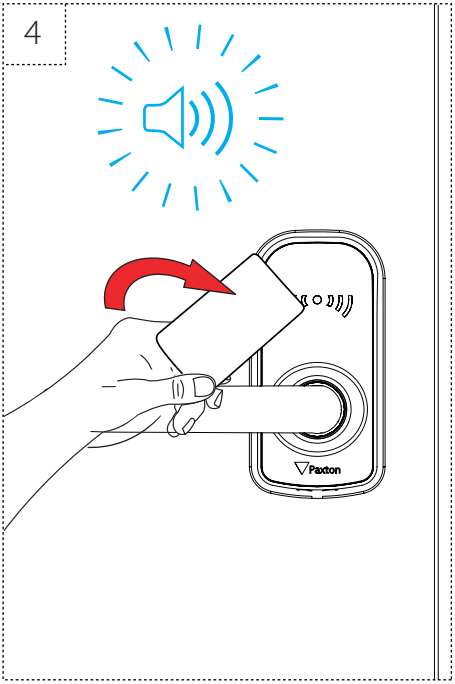
Paxton

5

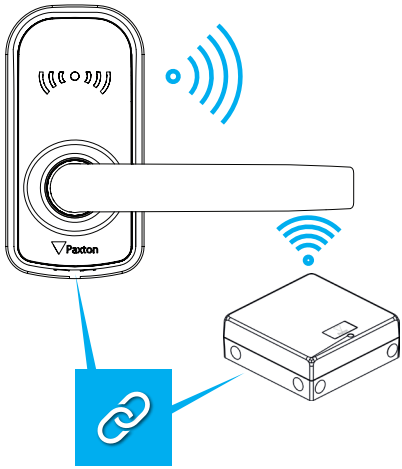

6

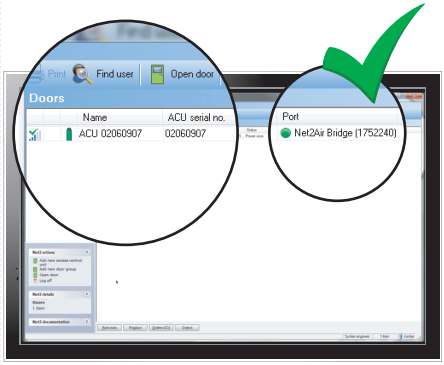

http://paxton.info/3094

Paxton

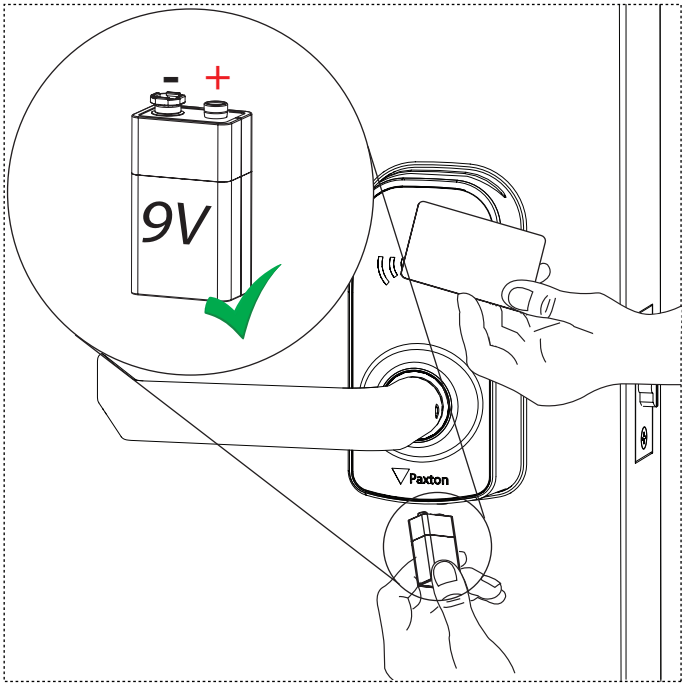
-
+
9V
Paxton

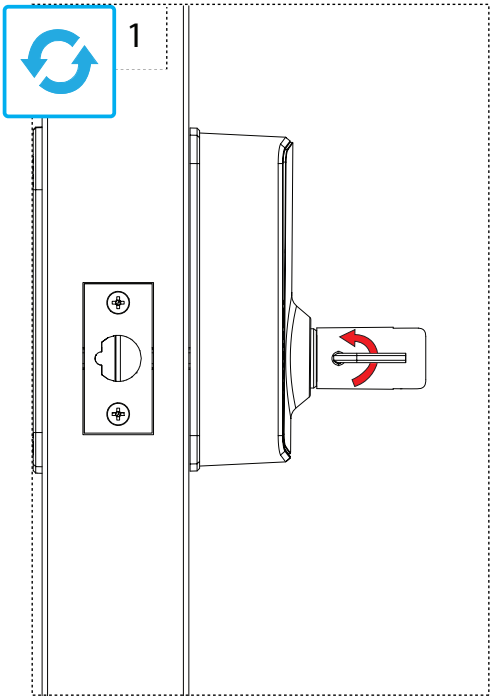
1

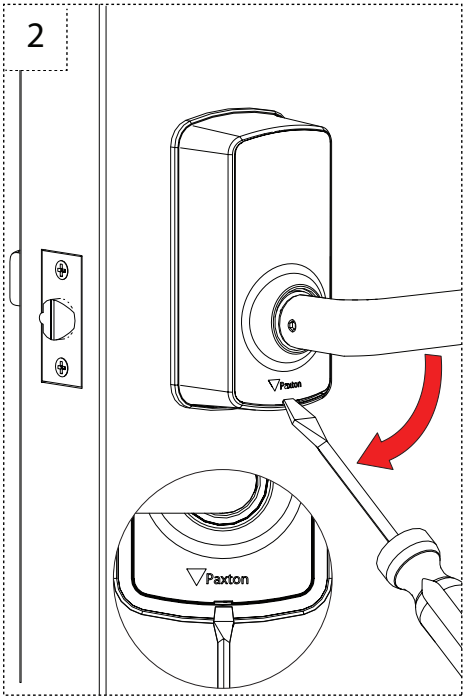
2
Paxton
Paxton

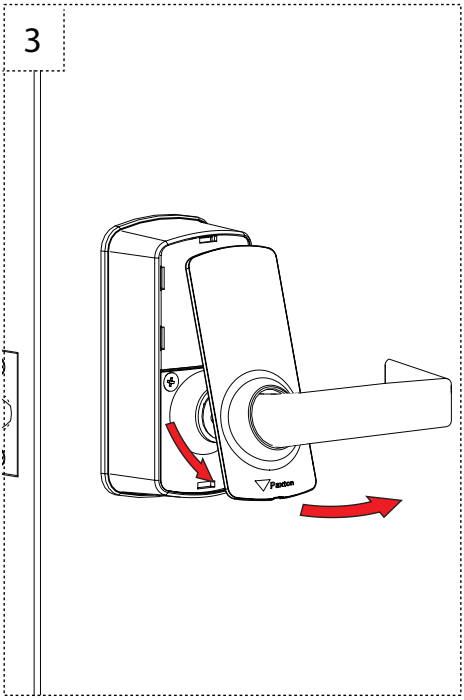
3
Paxton

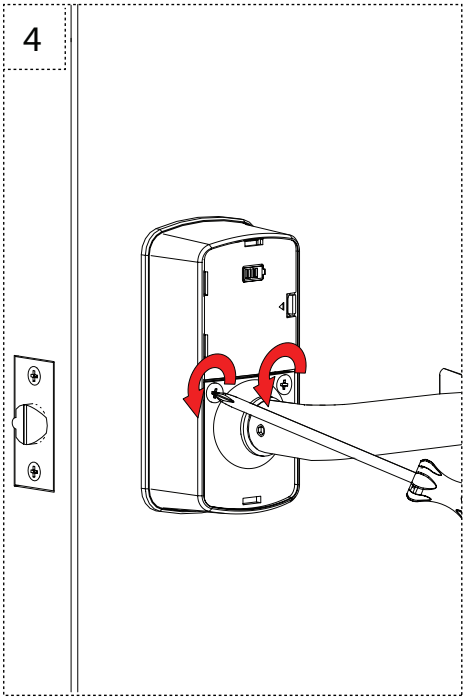
4

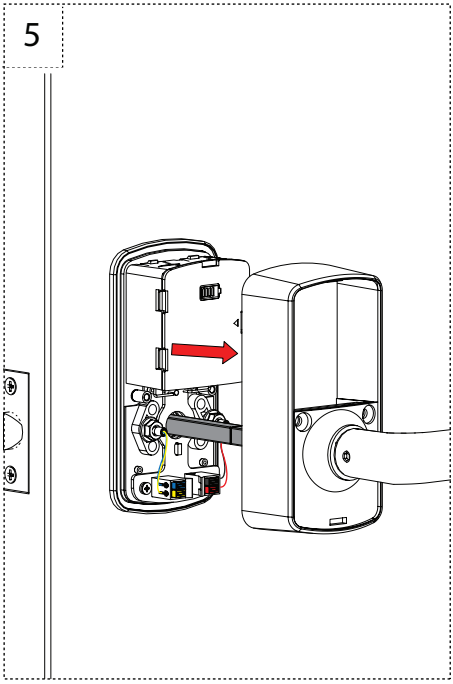
5

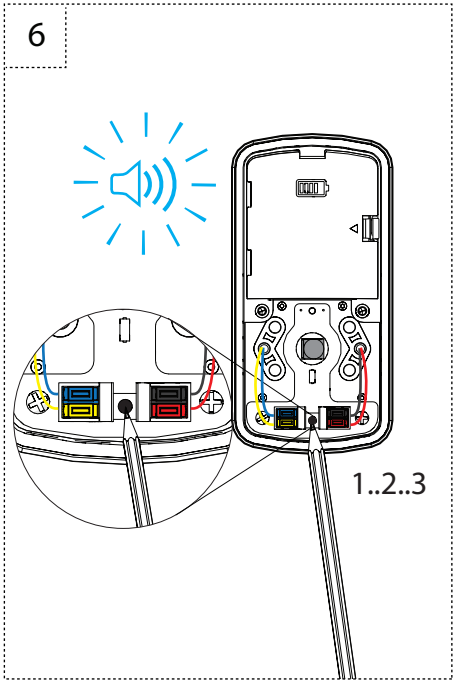
6
1..2..3

1

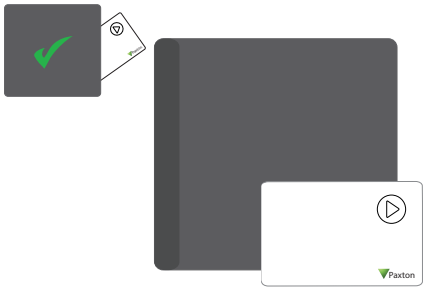

2

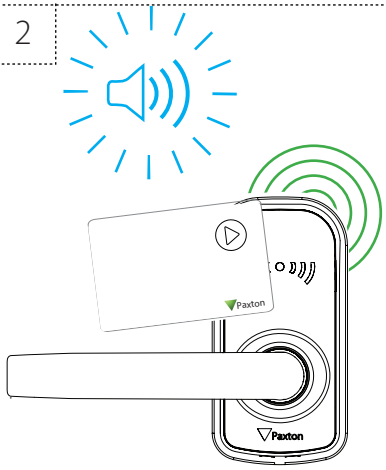

3

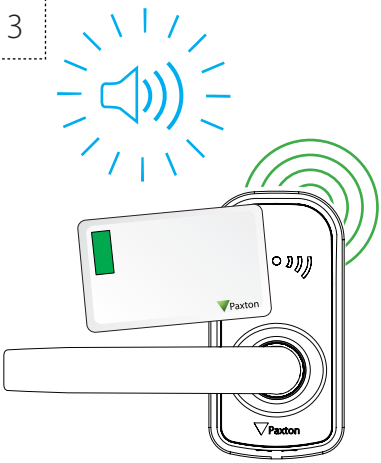

4

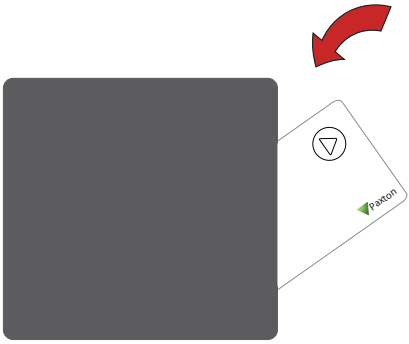

5

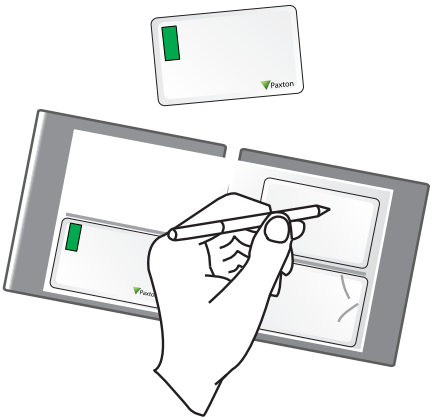

6

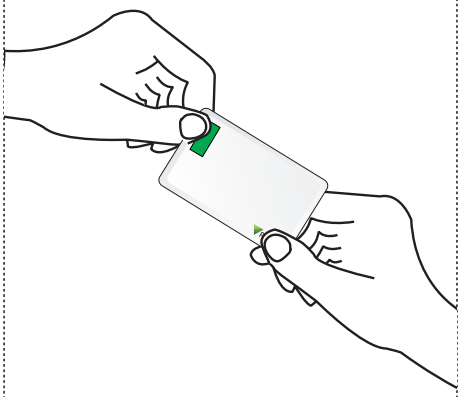

1

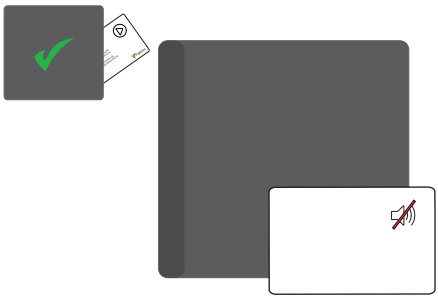

2

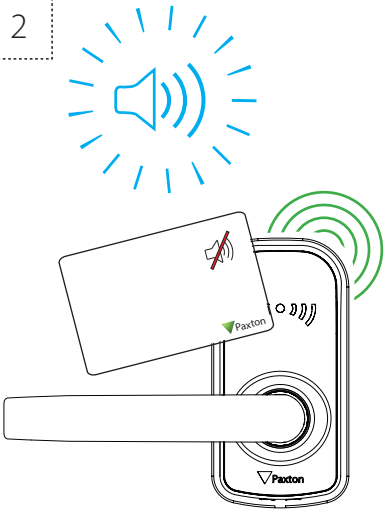

3

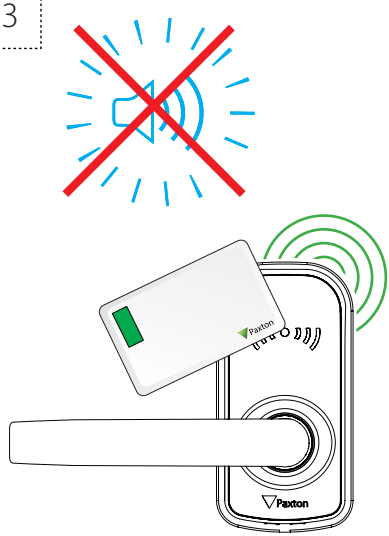

4

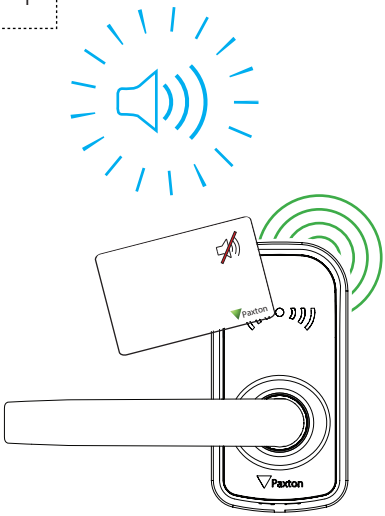

5

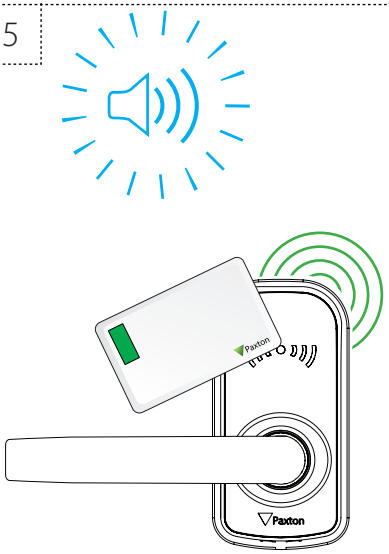

6

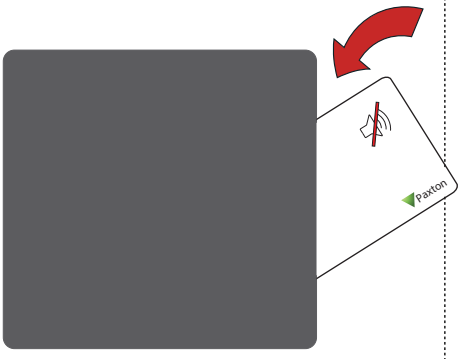

1

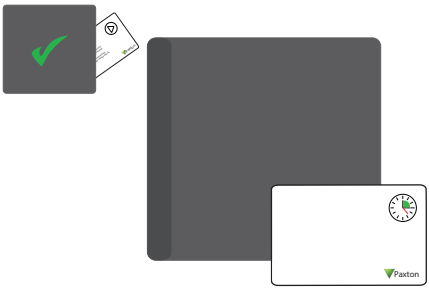

2

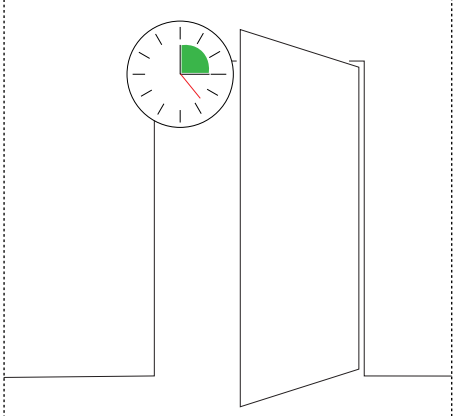

3

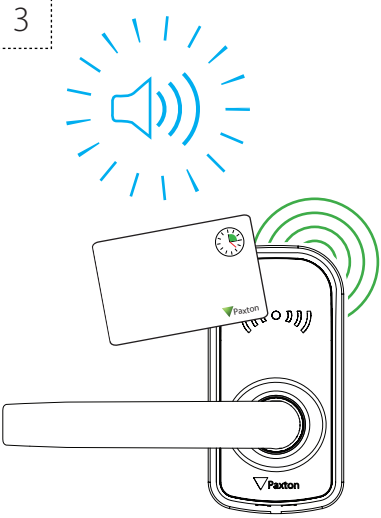

4

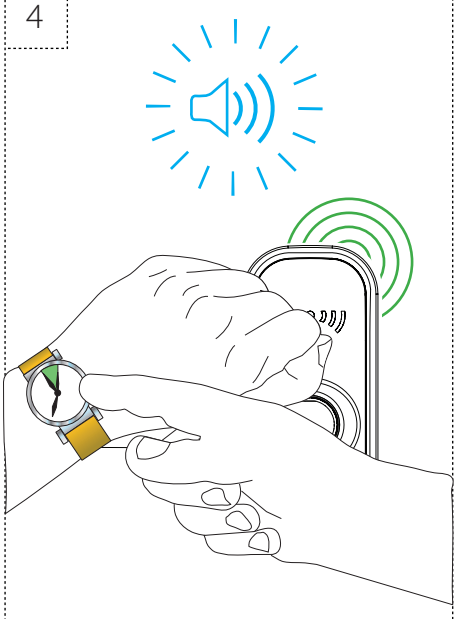

5

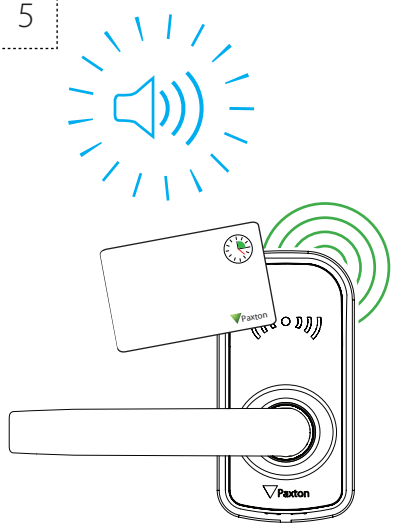

6

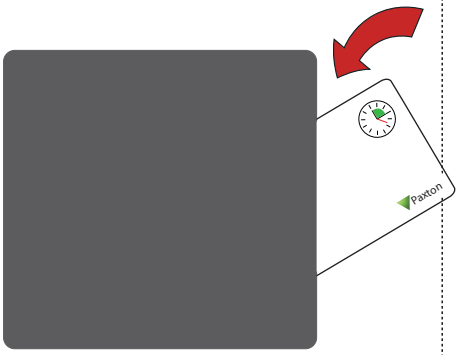

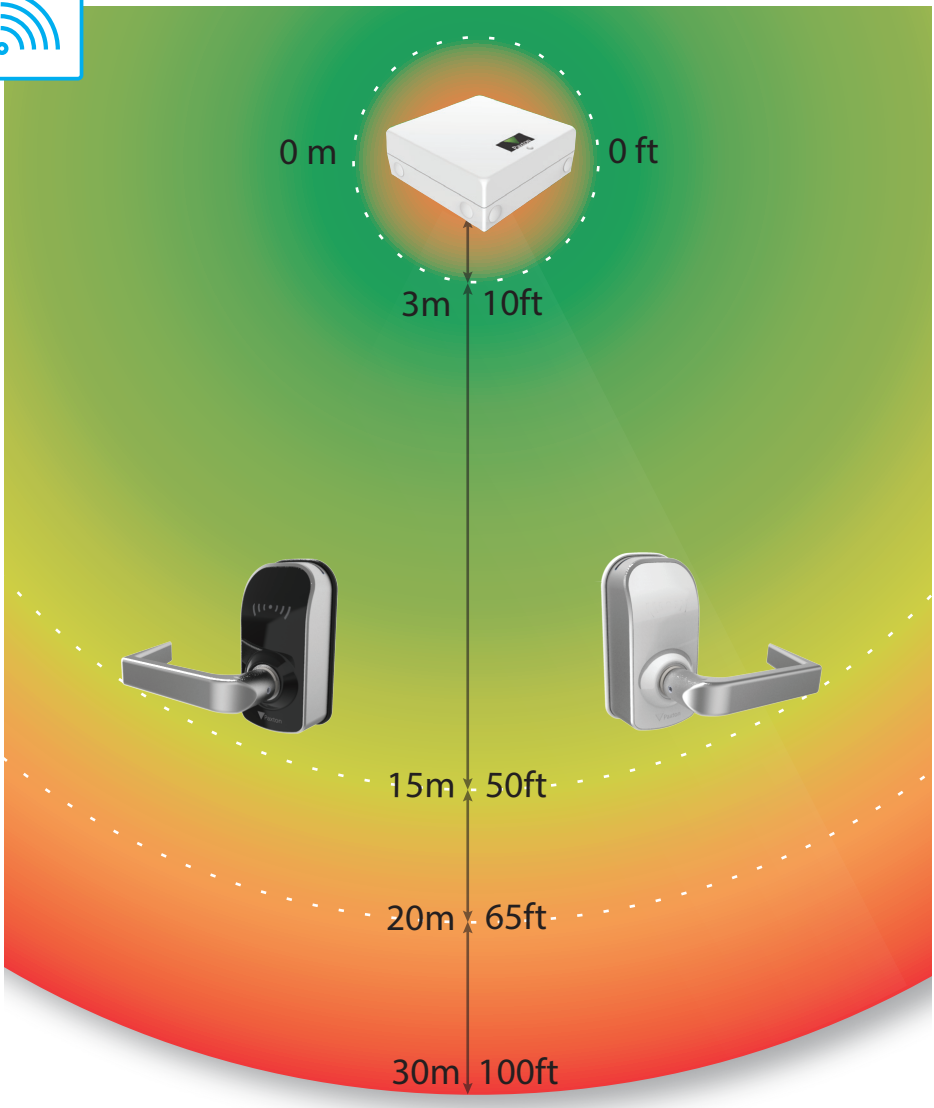
0 m
0 ft
3m
10ft
15m
50ft
20m
65ft
30m
100ft

	≤ 50000
	IEEE 802.15.4
	-20°C +55°C -4°F +131°F
	-0°C +49°C -32°F +120°F
	≤ 10 mm
	4 x AA Alkaline
	3m - 15m 10 ft - 65 ft
IP55	900-100WT 900-100BL ✗ 900-200WT 900-200BL ✓
	35 - 60 mm
	6V 800mA

+44 (0)1273 811011
support@paxton.co.uk
paxton.support

877.438.7298
supportUS@paxton-access.com
usapaxton.support

+31 (0)76 3333 999
support@paxton-benelux.com
paxton.benelux.support

+32 (0) 78485147
support@paxton-benelux.com
paxton.benelux.support

+49 (0) 251 2080 6900
verkauf@paxton-gmbh.de
paxton.gmbh.support

+33 (0)1 57 32 93 56
support@paxtonaccess.fr
paxton.support

+27 (0) 21 4276691
support@paxtonaccess.co.za
paxton.support

8000 3570 3783
support@paxtonaccess.ae
paxton.support

+52 55 5351 3667
soporte@paxton-access.com
paxton.soporte

+57 1508 8198
soporte@paxton-access.com
paxton.soporte

+44 (0)1273 811011
support@paxton.co.uk
paxton.support

The declaration of conformity is available on request. Contact details are provided at:
http://paxton.info/596

These products are not suitable for retail sale. All warranties are invalid if these products are not installed by a competent person.

Parts of this product are Copyright (c) 2013-2015 Atmel Corporation. All rights reserved. Redistribution and use in source and binary forms, with or without modification, are permitted provided that the following conditions are met:

1. Redistributions of source code must retain the above copyright notice, this list of conditions and the following disclaimer.
2. Redistributions in binary form must reproduce the above copyright notice, this list of conditions and the following disclaimer in the documentation and/or other materials provided with the distribution.
3. The name of Atmel may not be used to endorse or promote products derived from this software without specific prior written permission.
4. This software may only be redistributed and used in connection with an Atmel microcontroller product.

THIS SOFTWARE IS PROVIDED BY ATMEL "AS IS" AND ANY EXPRESS OR IMPLIED WARRANTIES, INCLUDING, BUT NOT LIMITED TO, THE IMPLIED WARRANTIES OF MERCHANTABILITY, FITNESS FOR A PARTICULAR PURPOSE AND NON-INFRINGEMENT ARE EXPRESSLY AND SPECIFICALLY DISCLAIMED. IN NO EVENT SHALL ATMEL BE LIABLE FOR ANY DIRECT, INDIRECT, INCIDENTAL, SPECIAL, EXEMPLARY, OR CONSEQUENTIAL DAMAGES (INCLUDING, BUT NOT LIMITED TO, PROCUREMENT OF SUBSTITUTE GOODS OR SERVICES; LOSS OF USE, DATA, OR PROFITS; OR BUSINESS INTERRUPTION) HOWEVER CAUSED AND ON ANY THEORY OF LIABILITY, WHETHER IN CONTRACT, STRICT LIABILITY, OR TORT (INCLUDING NEGLIGENCE OR OTHERWISE) ARISING IN ANY WAY OUT OF THE USE OF THIS SOFTWARE, EVEN IF ADVISED OF THE POSSIBILITY OF SUCH DAMAGE.

Product compliance and limitations

Wiring methods shall be in accordance with the National Electrical Code (ANSI/NFPA70), local codes, and the authorities having jurisdiction.

This device complies with Industry Canada licence-exempt RSS standard(s). Operation is subject to the following two conditions: (1) this device may not cause interference, and (2) this device must accept any interference, including interference that may cause undesired operation of the device.

This device complies with Part 15 of the FCC Rules. Operation is subject to the following two conditions:
(1) this device may not cause harmful interference, and (2) this device must accept any interference received, including interference that may cause undesired operation. Changes or modifications not expressly approved by the party responsible for compliance could void the user's authority to operate the equipment.

CAUTION RISK OF EXPLOSION IF BATTERY IS REPLACED BY AN INCORRECT TYPE. DISPOSE OF USED BATTERIES ACCORDING TO THE INSTRUCTIONS.

Conformité et limitations du produit

Les méthodes de câblage doivent être en accord avec le code nation électrique (ANSI/NFPA70), codes locaux et les autorités ayant la juridiction.

Ce dispositif est conforme au(x) standards RSS de l'industrie Canadienne sans-licence. Le fonctionnement est soumis aux deux conditions suivantes : (1) ce dispositif ne doit pas créer d'interférences nuisibles et (2) ce dispositif doit accepter toute interférence reçue, y compris des interférences qui peuvent causer un fonctionnement non souhaité.

Ce dispositif est conforme à la section 15 du règlement de la FCC. Le fonctionnement est soumis aux deux conditions suivantes : (1) ce dispositif ne doit pas créer d'interférences nuisibles et (2) ce dispositif doit accepter toute interférence reçue, y compris des interférences qui peuvent causer un fonctionnement non souhaité. Tout changement ou modification non agréé par la partie responsable de la mise en conformité peut entraîner une interdiction d'utilisation de l'équipement.

http://paxton.info/1606

Made in the UK

© Paxton Ltd 1.0.0