Paxton

ins-30230

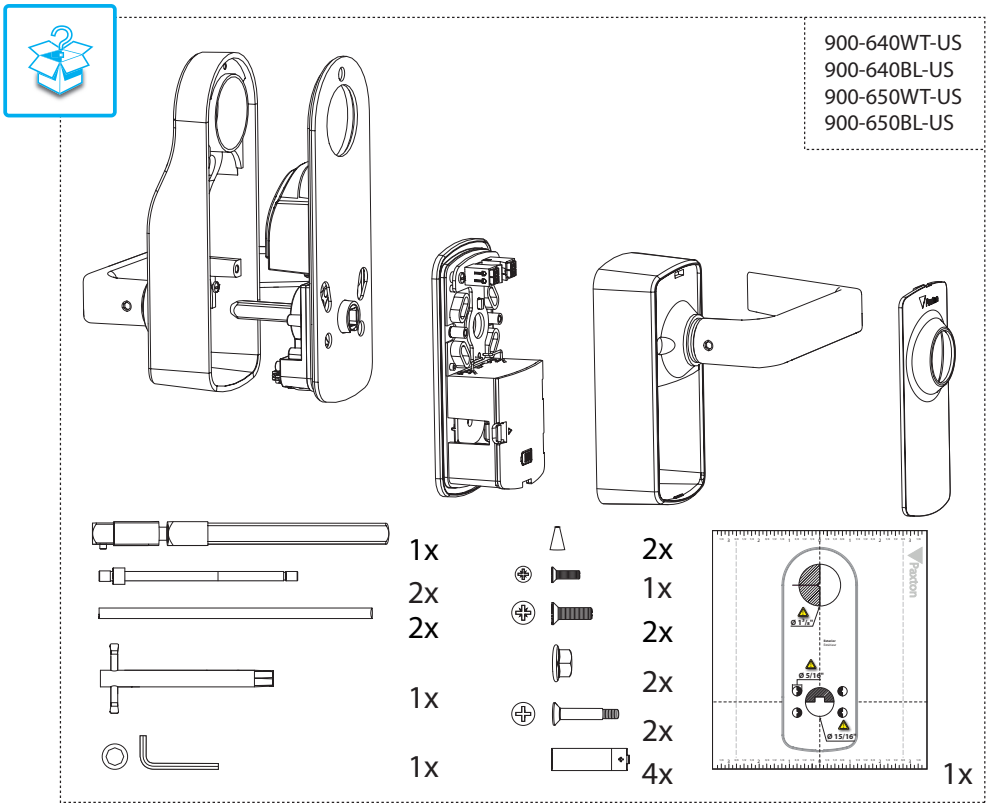
900-640WT-US
900-640BL-US
900-650WT-US
900-650BL-US
1x
2x
2x
1x
1x
2x
1x
2x
2x
2x
4x
Paxton
Ø 1 1/4"
Ø 5/16"
Ø 15/16"
1x

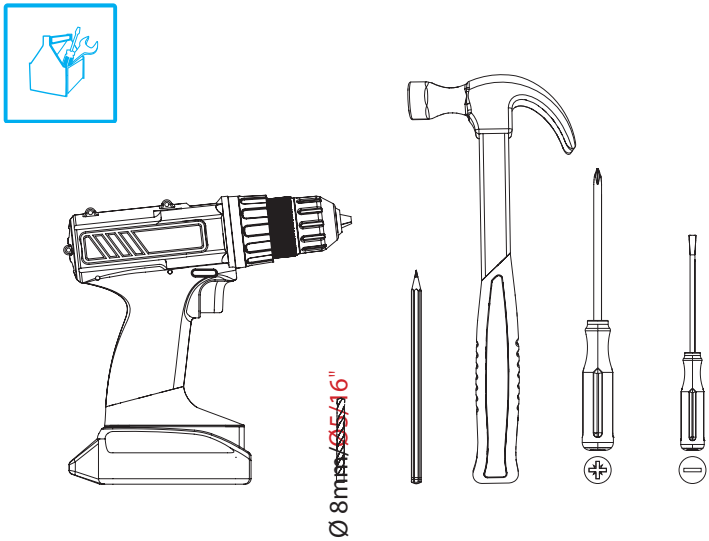
Ø 8mm/ 5/16"

1

Exterior
Extérieur

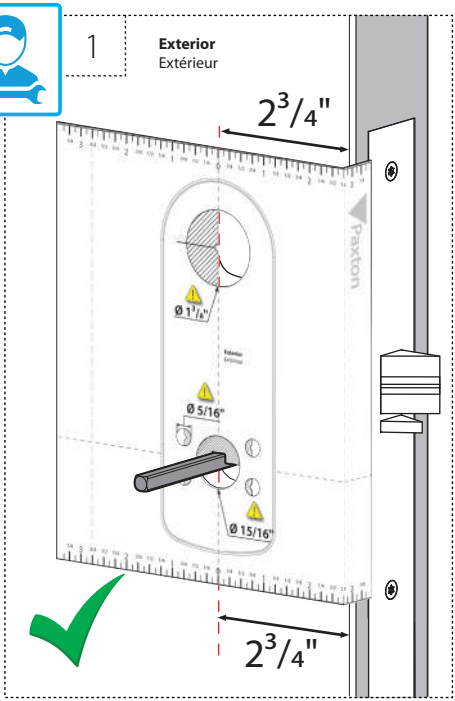

2

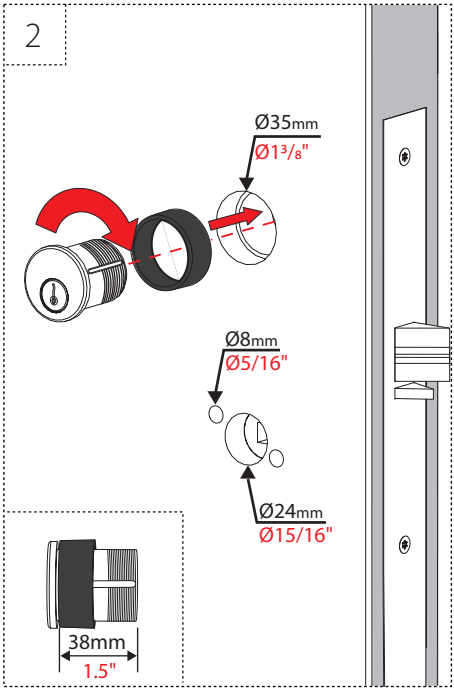

3

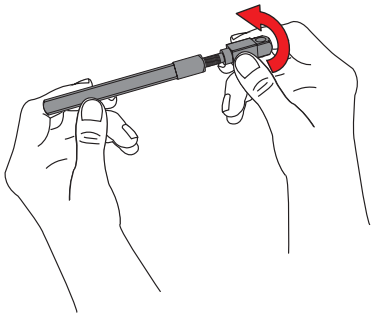

EN Leave at least 1/8" showing so the two parts can freely turn in both directions when fitted.

F Laissez minimum 3mm d'écart, tel que les deux composants puissent pivoter librement.

ES Deje al menos 1/8" a la vista para que las dos partes puedan girar libremente en ambas direcciones al encajar.

4

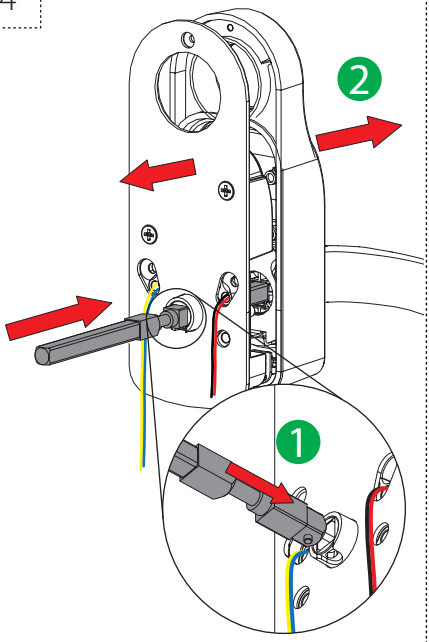

5

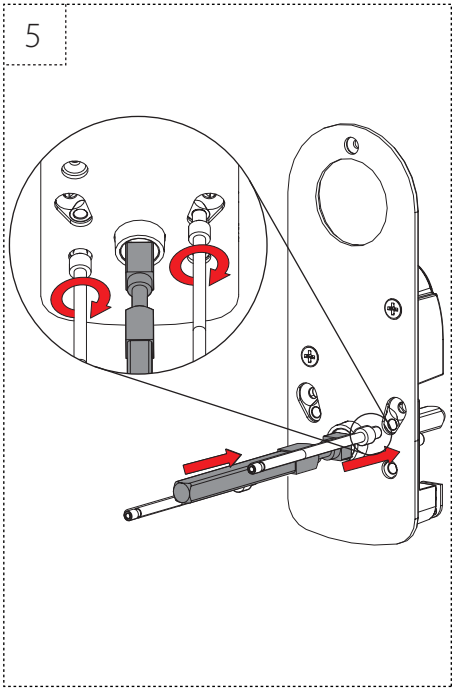

6

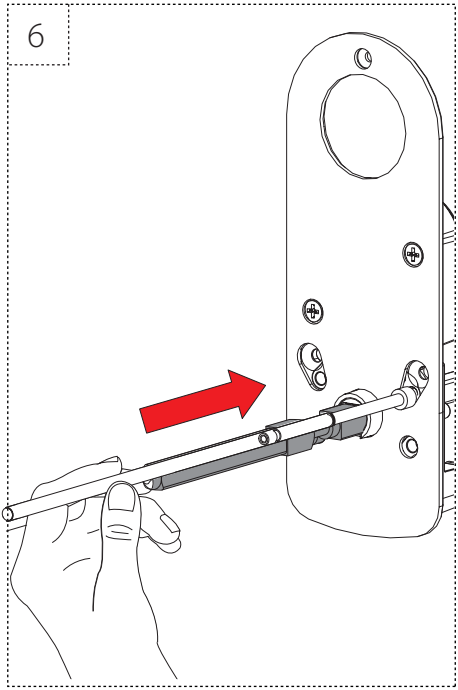

7

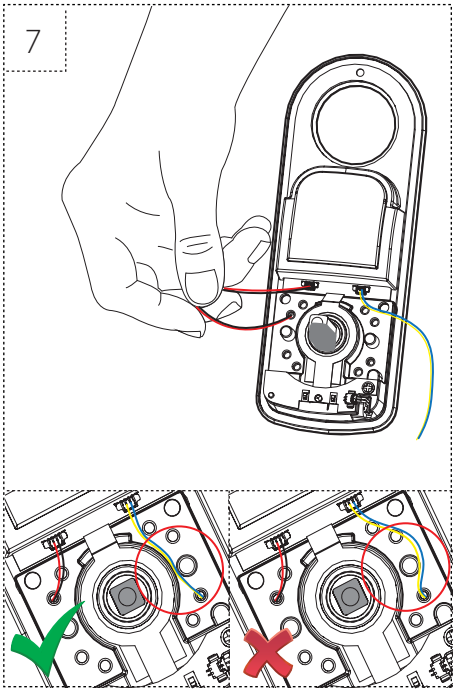

8

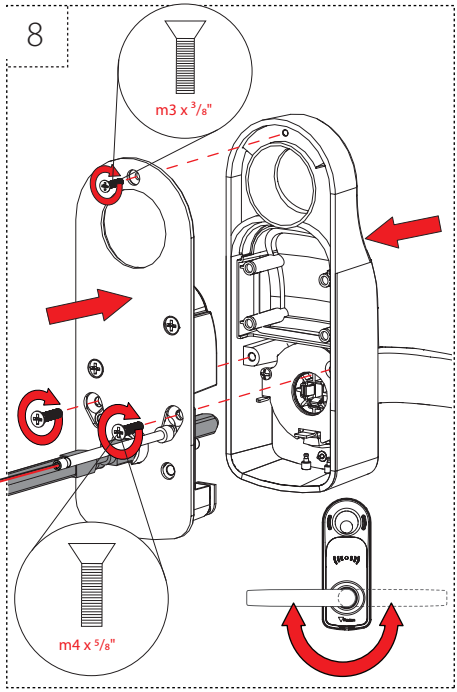

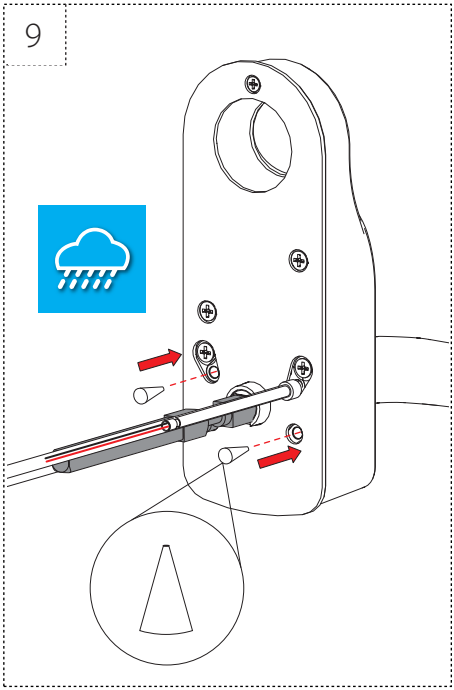
9

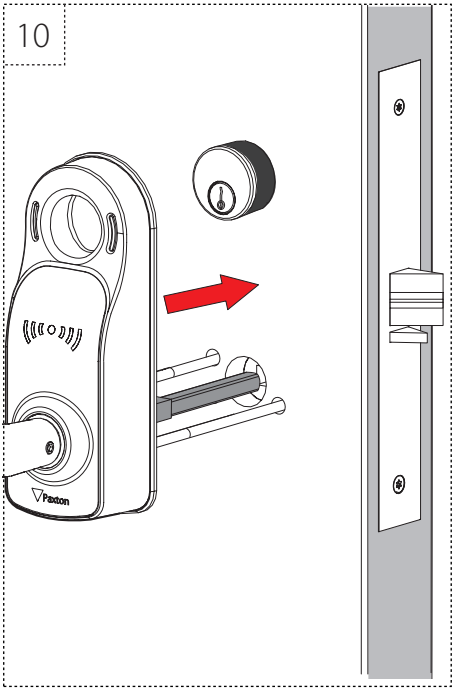
10
Paxton

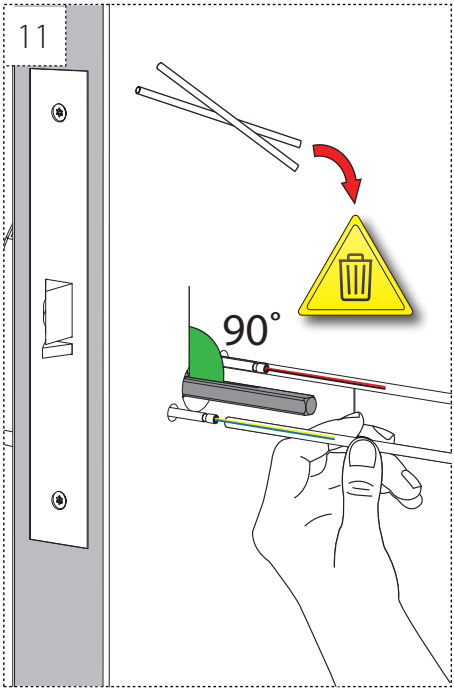
11
90°

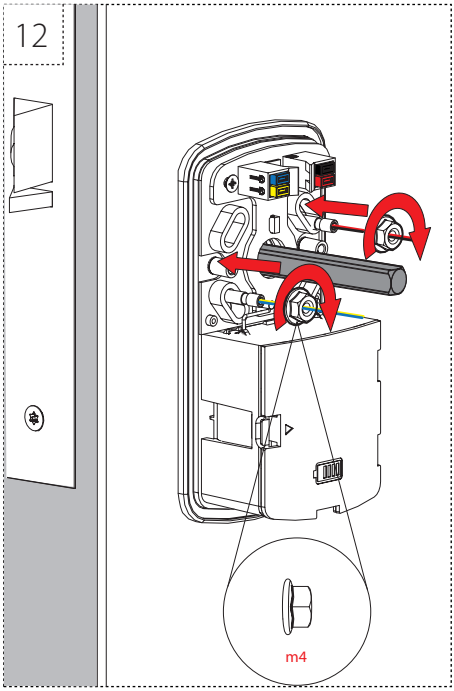
12
m4

13

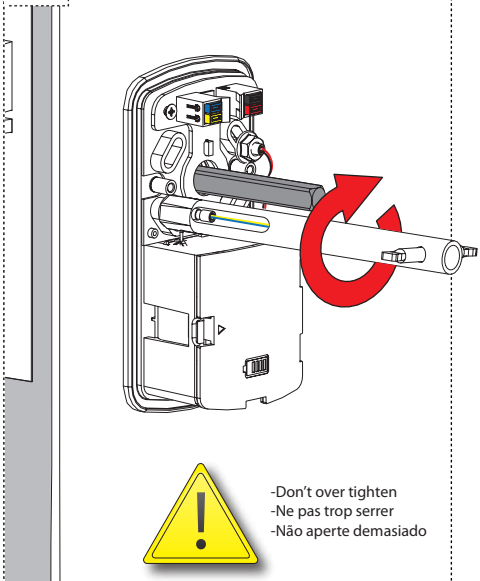
-Don’t over tighten
-Ne pas trop serrer
-Não aperte demasiado

14

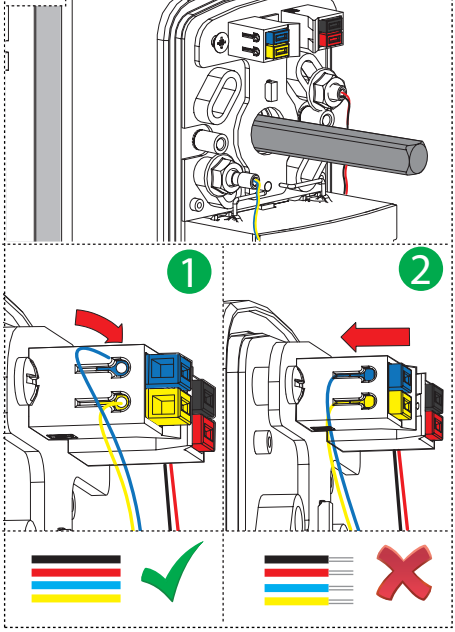
1
2

15

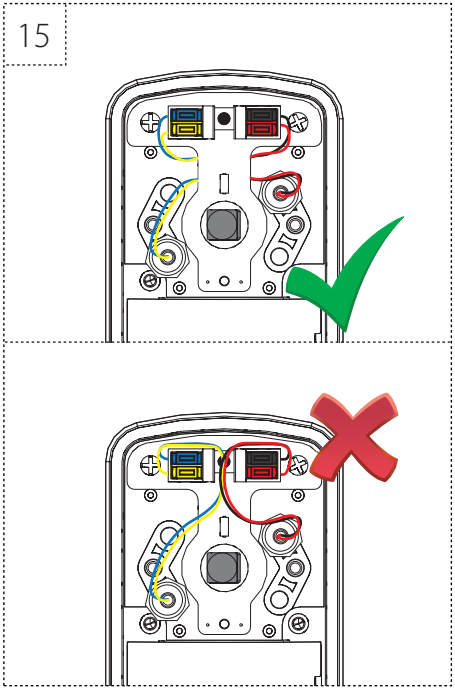

16

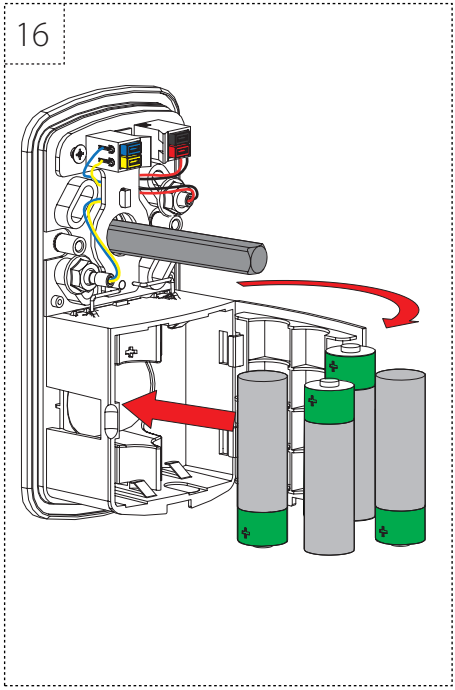

17

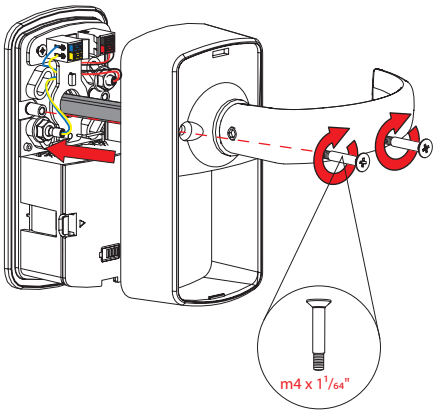

18

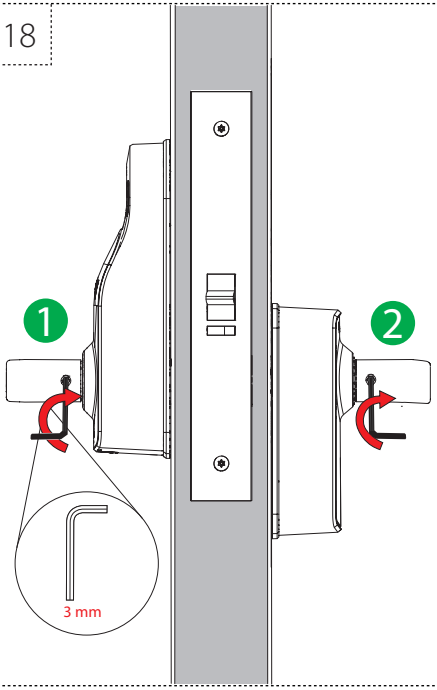

19

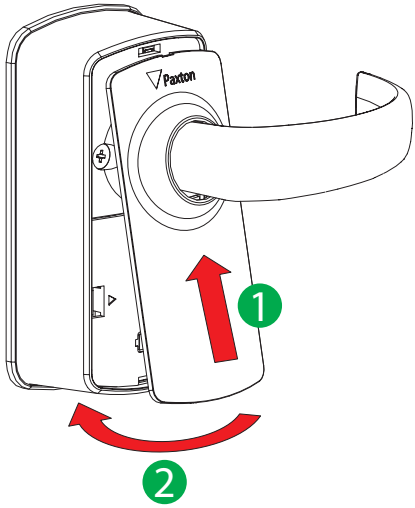

1

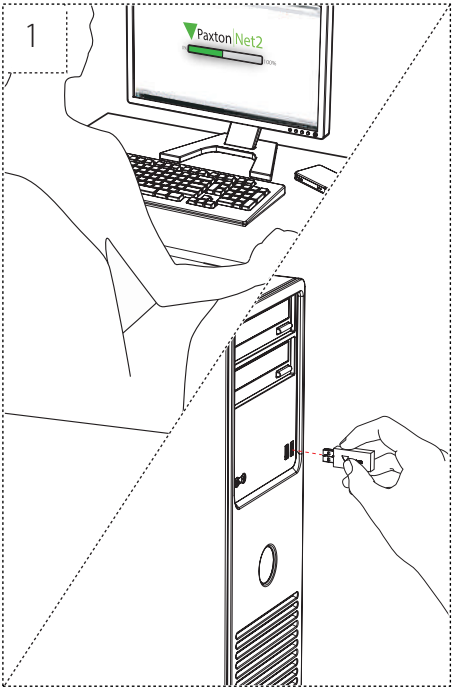
Paxton Net2

2

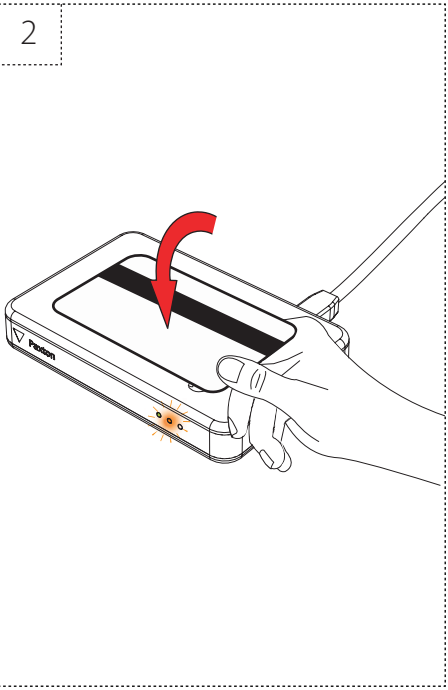
Paxton

3

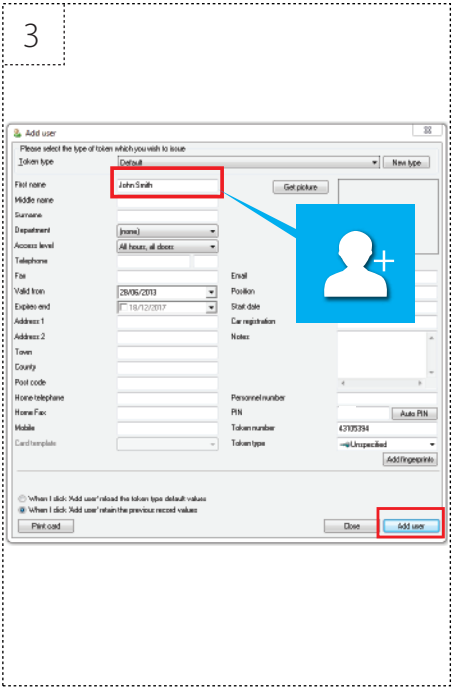
Add user
Please select the type of token which you wish to issue
Token type
Default
New type
First name
John Smith
Get picture
Middle name
Surname
Department
(none)
Access level
All hours, all doors
Telephone
Fax
Email
Valid from
28/06/2013
Position
Expires end
18/12/2017
Start date
Address 1
Car registration
Address 2
Notes
Town
County
Post code
Home telephone
Personnel number
Home Fax
PIN
Auto PIN
Mobile
Token number
43105394
Card template
Token type
Unspecified
Add fingerprints
When I click 'Add user' reload the token type default values
When I click 'Add user' retain the previous record values
Print card
Close
Add user

4

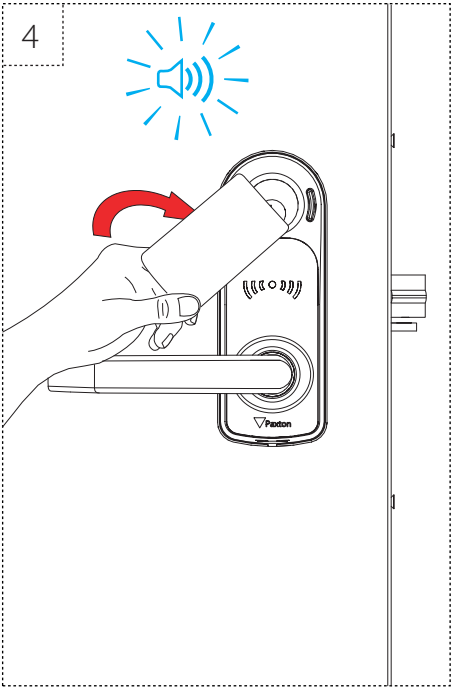
Paxton

5

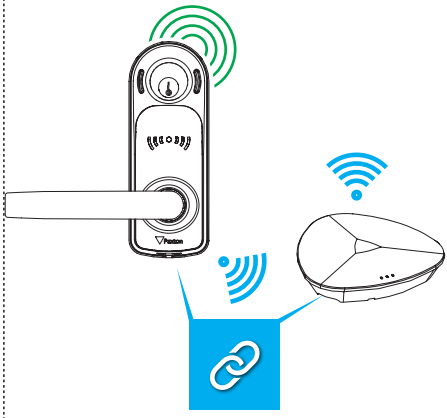

6

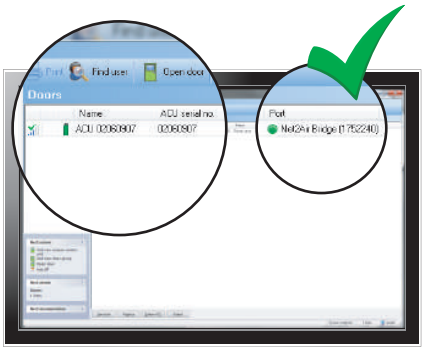
Find user
Open door
Doors
Name
ADU serial no.
Port
ADU 00060807
00060807
Net2Air Bridge (1752240)

1

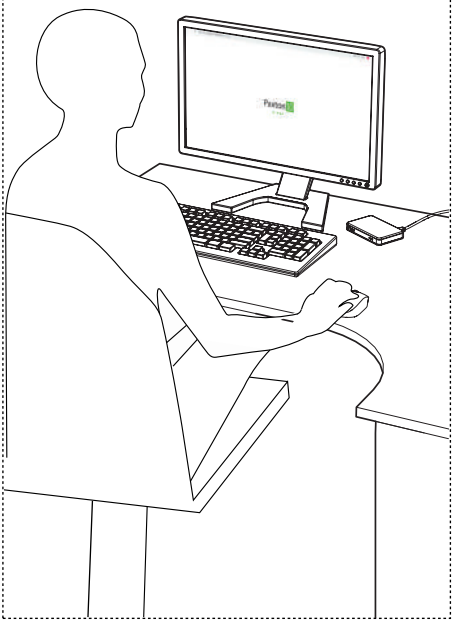

2

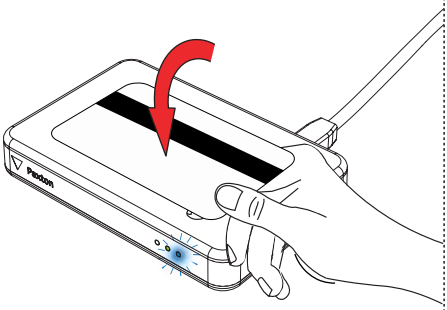

3

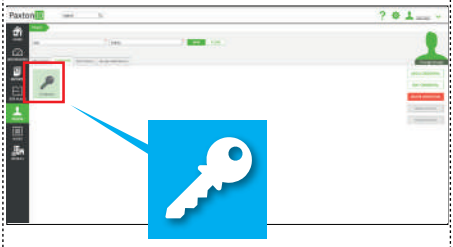

4

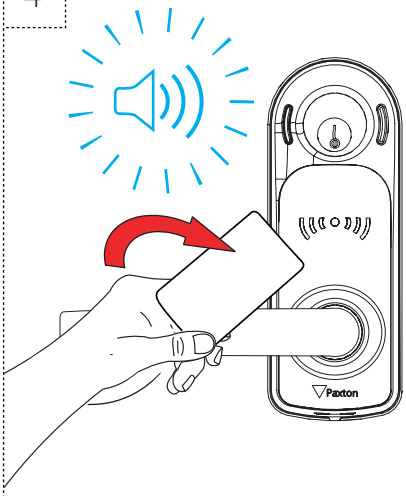

5

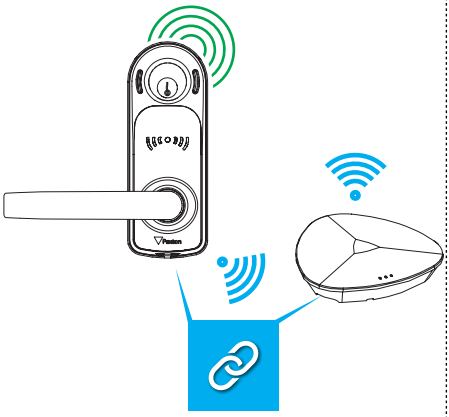

6

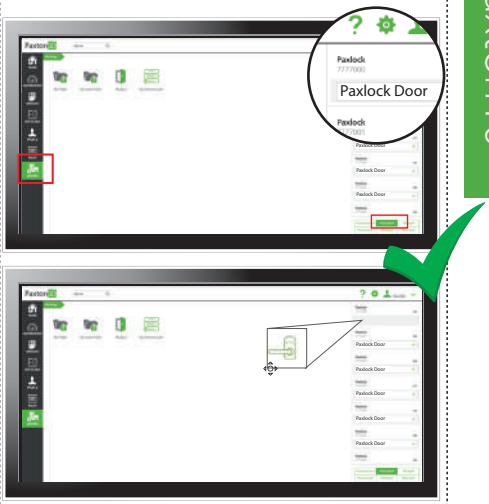

Paxton

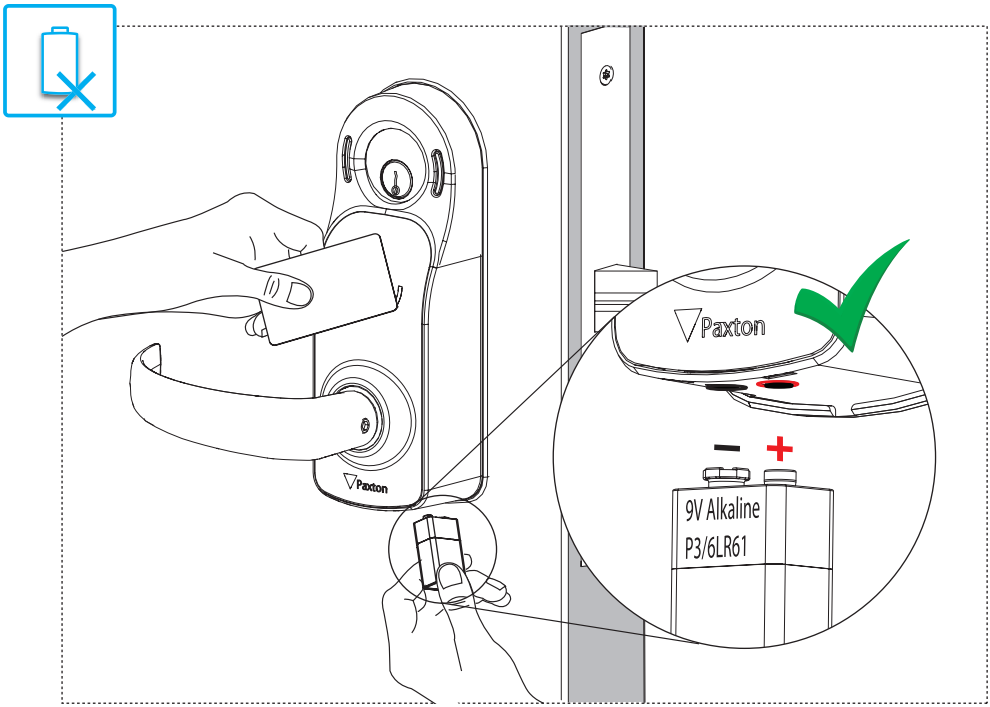
Paxton
Paxton
–
+
9V Alkaline
P3/6LR61

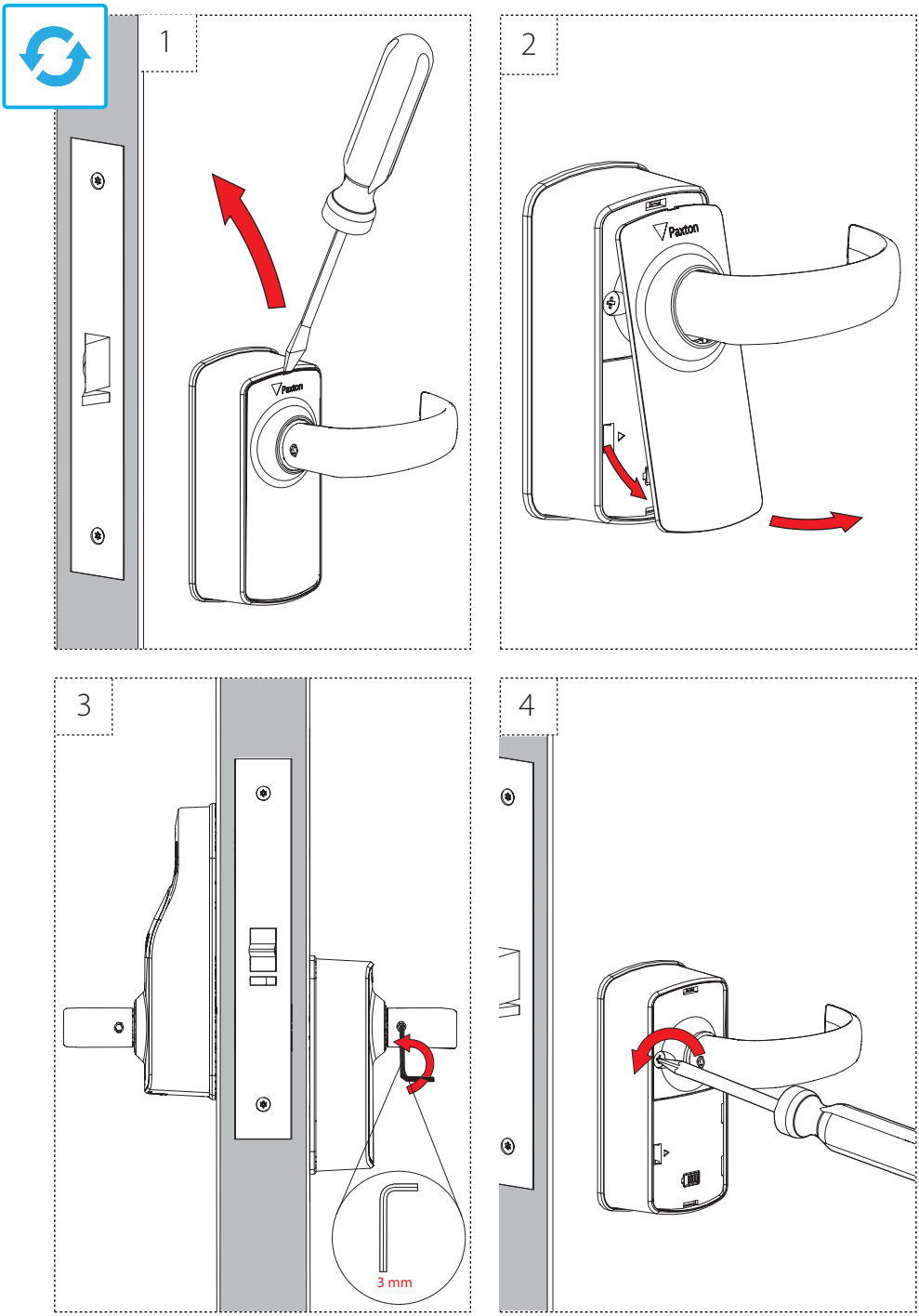
1
Paxton
2
Paxton
3
3 mm
4

5

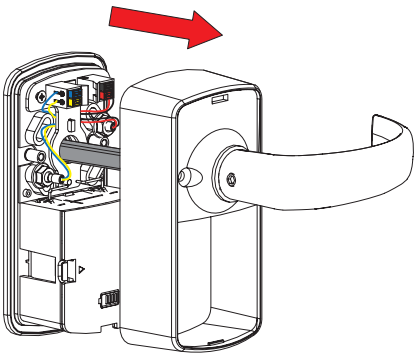

6

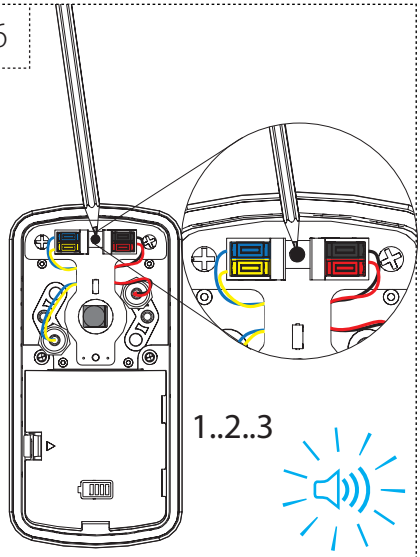

1

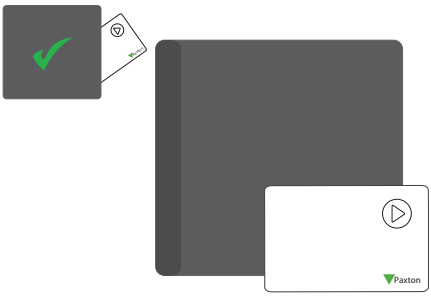

2

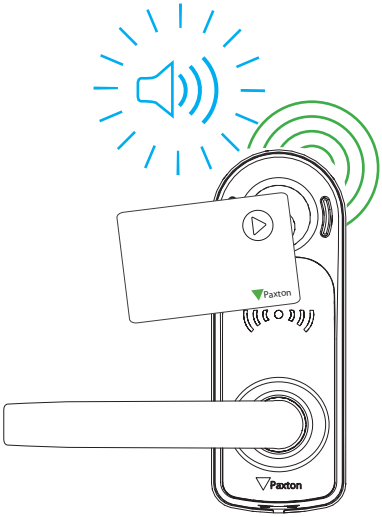

3

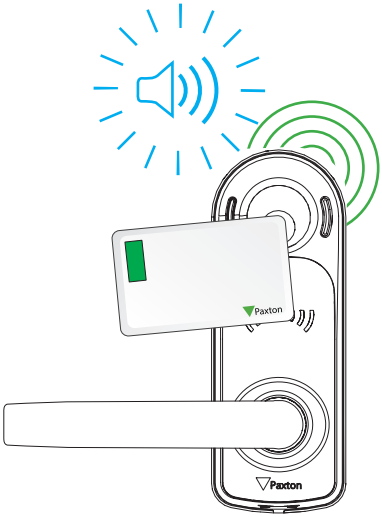

4

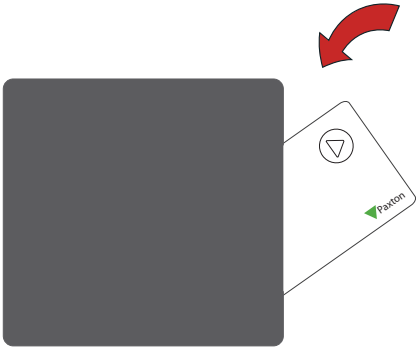

5

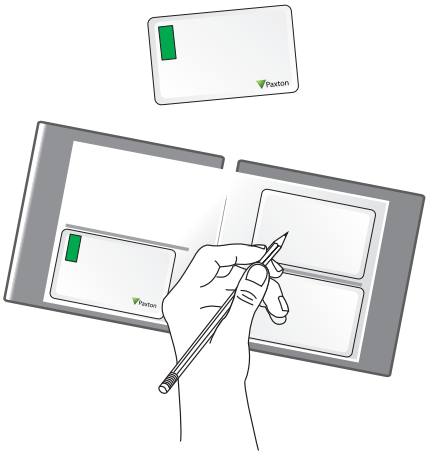

6

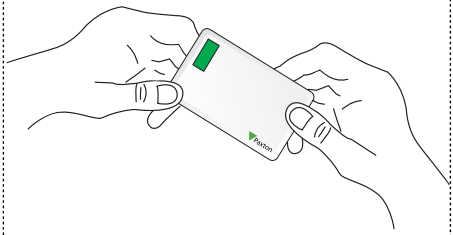

1

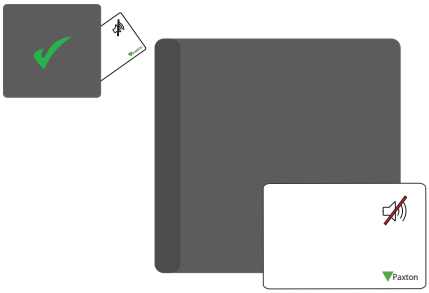

2

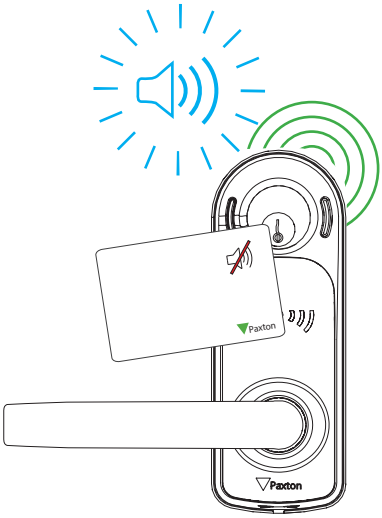

3

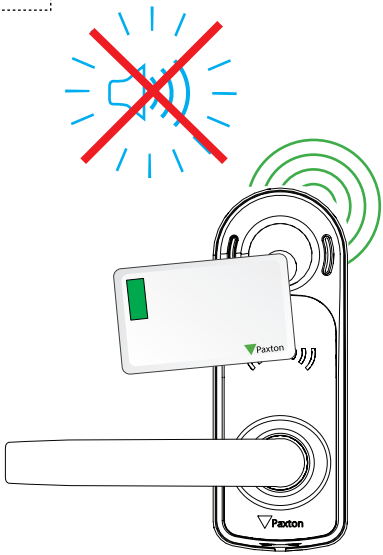

4

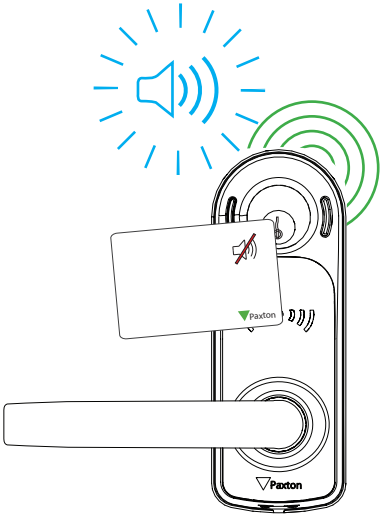

5

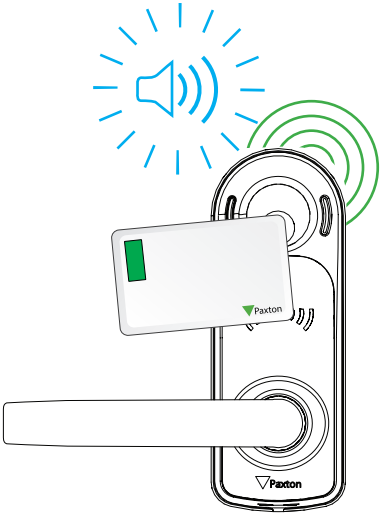

6

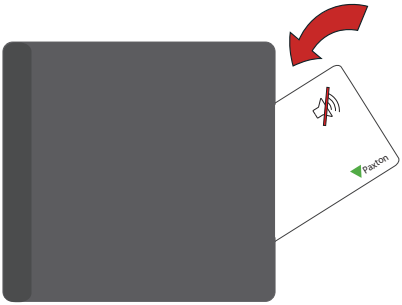

1

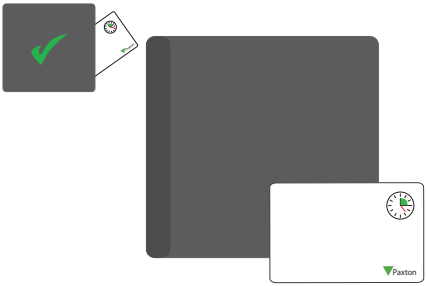

2

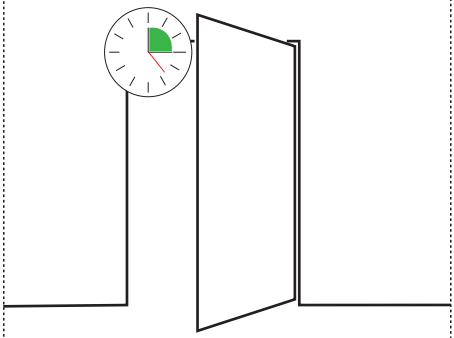

3

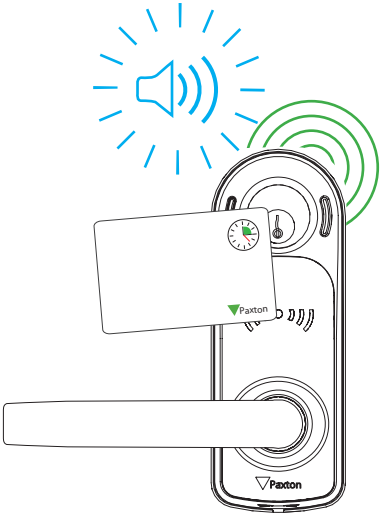

4

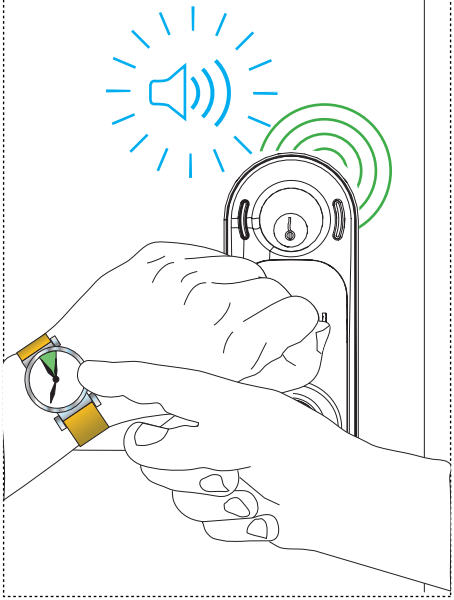

5

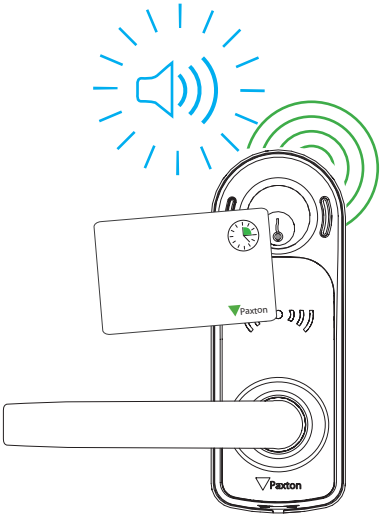

6

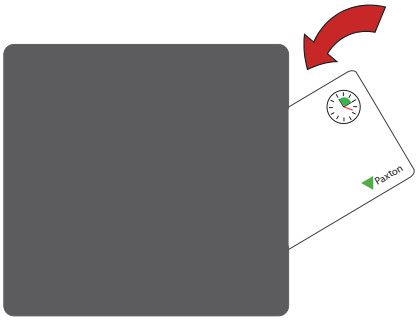

15m/50ft

≤ 50000

IEEE 802.15.4
Bluetooth®
low energy technology

-35°C - +66°C
-31°F - +151°F

0°C - +49°C
+32°F - +120°F

≤ 10 mm

13.56 MHz
125 KHz

FCC / ISED
UL 294
ANSI 156.25
UL10C / ULC S104

4 x AA Alkaline

3m - 15m
10 ft - 50 ft

85 ±5%

35 - 62 mm
1 $^{3}/_{8}$" - 2 $^{7}/_{16}$"

6V
800mA

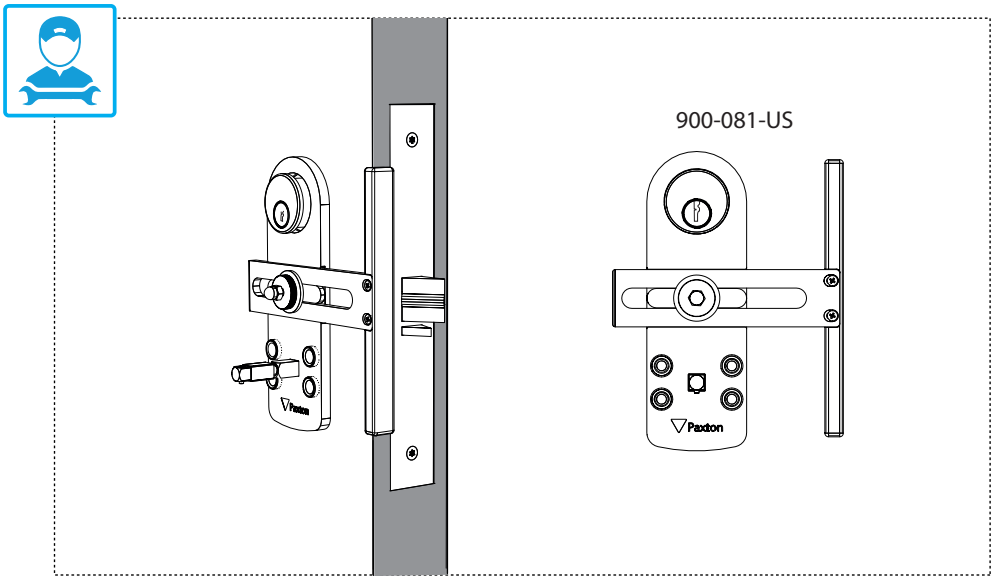
900-081-US
Paxton
Paxton

+44 (0)1273 811011
support@paxton.co.uk
paxton.support

877.438.7298
supportUS@paxton-access.com
usapaxton.support

+31 (0)76 3333 999
support@paxton-benelux.com
paxton.benelux.support

+32 (0) 78485147
support@paxton-benelux.com
paxton.benelux.support

+49 (0) 251 2080 6900
verkauf@paxton-gmbh.de
paxton.gmbh.support

+33 (0)1 57 32 93 56
support@paxtonaccess.fr
paxton.support

+27 (0) 21 4276691
support@paxtonaccess.co.za
paxton.support

8000 3570 3783
support@paxtonaccess.ae
paxton.support

+52 55 5351 3667
soporte@paxton-access.com
paxton.soporte

+57 1508 8198
soporte@paxton-access.com
paxton.soporte

+44 (0)1273 811011
support@paxton.co.uk
paxton.support

These products are not suitable for retail sale. All warranties are invalid if these products are not installed by a competent person.

Parts of this product are Copyright (c) 2013-2015 Atmel Corporation. All rights reserved. Redistribution and use in source and binary forms, with or without modification, are permitted provided that the following conditions are met:

1. Redistributions of source code must retain the above copyright notice, this list of conditions and the following disclaimer.
2. Redistributions in binary form must reproduce the above copyright notice, this list of conditions and the following disclaimer in the documentation and/or other materials provided with the distribution.
3. The name of Atmel may not be used to endorse or promote products derived from this software without specific prior written permission.
4. This software may only be redistributed and used in connection with an Atmel microcontroller product.

THIS SOFTWARE IS PROVIDED BY ATMEL "AS IS" AND ANY EXPRESS OR IMPLIED WARRANTIES, INCLUDING, BUT NOT LIMITED TO, THE IMPLIED WARRANTIES OF MERCHANTABILITY, FITNESS FOR A PARTICULAR PURPOSE AND NON-INFRINGEMENT ARE EXPRESSLY AND SPECIFICALLY DISCLAIMED. IN NO EVENT SHALL ATMEL BE LIABLE FOR ANY DIRECT, INDIRECT, INCIDENTAL, SPECIAL, EXEMPLARY, OR CONSEQUENTIAL DAMAGES (INCLUDING, BUT NOT LIMITED TO, PROCUREMENT OF SUBSTITUTE GOODS OR SERVICES; LOSS OF USE, DATA, OR PROFITS; OR BUSINESS INTERRUPTION) HOWEVER CAUSED AND ON ANY THEORY OF LIABILITY, WHETHER IN CONTRACT, STRICT LIABILITY, OR TORT (INCLUDING NEGLIGENCE OR OTHERWISE) ARISING IN ANY WAY OUT OF THE USE OF THIS SOFTWARE, EVEN IF ADVISED OF THE POSSIBILITY OF SUCH DAMAGE.

UL listed to the following standards: ANSI/UL 10C compliant (180 min fire doors), CAN/ULC S104 compliant (180 min fire doors)

UL 294 performance level table:

Feature	Level
Destructive Attack	1
Line Security	1
Endurance	4
Standby Power	1
Single Point Locking Device with Key Locks	1

Product compliance and limitations

Wiring methods shall be in accordance with the National Electrical Code (ANSI/NFPA70), local codes, and the authorities having jurisdiction.

This device complies with Industry Canada licence-exempt RSS standard(s). Operation is subject to the following two conditions: (1) this device may not cause interference, and (2) this device must accept any interference, including interference that may cause undesired operation of the device.

This device complies with Part 15 of the FCC Rules. Operation is subject to the following two conditions:
(1) this device may not cause harmful interference, and (2) this device must accept any interference received, including interference that may cause undesired operation. Changes or modifications not expressly approved by the party responsible for compliance could void the user's authority to operate the equipment.

CAUTION RISK OF EXPLOSION IF BATTERY IS REPLACED BY AN INCORRECT TYPE. DISPOSE OF USED BATTERIES ACCORDING TO THE INSTRUCTIONS.

UL 294 tableau de niveau de performance:

Fonctionnalités	Niveau
Attaque destructive	1
Sécurité des lignes de communication	1
Endurance	4
Alimentation de secours	1
Dispositif de verrouillage à point unique avec serrure à clé	1

Conformité et limitations du produit

Les méthodes de câblage doivent être en accord avec le code nation électrique (ANSI/NFPA70), codes locaux et les autorités ayant la juridiction.

Ce dispositif est conforme au(x) standards RSS de l'industrie Canadienne sans-licence. Le fonctionnement est soumis aux deux conditions suivantes : (1) ce dispositif ne doit pas créer d'interférences nuisibles et (2) ce dispositif doit accepter toute interférence reçue, y compris des interférences qui peuvent causer un fonctionnement non souhaité.

Ce dispositif est conforme à la section 15 du règlement de la FCC. Le fonctionnement est soumis aux deux conditions suivantes : (1) ce dispositif ne doit pas créer d'interférences nuisibles et (2) ce dispositif doit accepter toute interférence reçue, y compris des interférences qui peuvent causer un fonctionnement non souhaité. Tout changement ou modification non agréé par la partie responsable de la mise en conformité peut entraîner une interdiction d'utilisation de l'équipement.

http://paxton.info/1606

Made in the UK

© Paxton Ltd 1.0.1