Paxton

ins-40213-US

Paxlock US

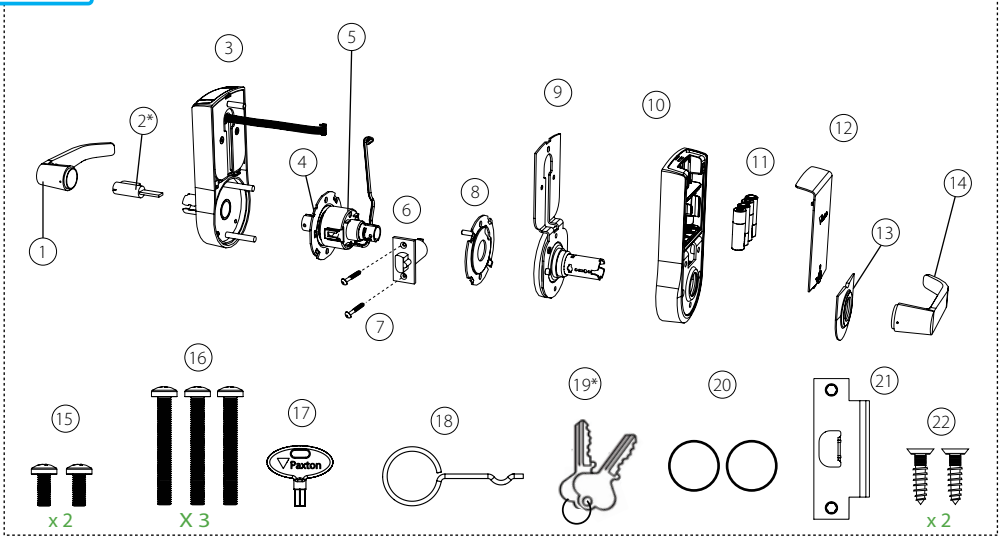

What's in the box

1) Front handle
2) Lock Cylinder *****
3) Paxlock front housing
4) Motor adjustment plate
5) Motor
6) 2-3/8" Latch
7) Latch screws x 2
8) Motor backplate
9) Backplate/Rose assembly
10) Paxlock rear housing
11) 4 x AA Alkaline batteries
12) Rear battery cover
13) Rear handle cover
14) Rear Handle
15) Small mounting screws x 2
16) Long mounting screws x 3
17) Battery cover key
18) Handle removal pin
19) Keys x 2 *****
20) Handle washers x 2
21) Strike plate
22) Strike plate screws x 2

*** Not for SFIC**

Tools List

Power Drill
Drill bits (1", 5/16", 5/8", 1/8")
Crosshead screwdriver
Chisel 1"
Knife
Adhesive tape
Pencil
Tape measure

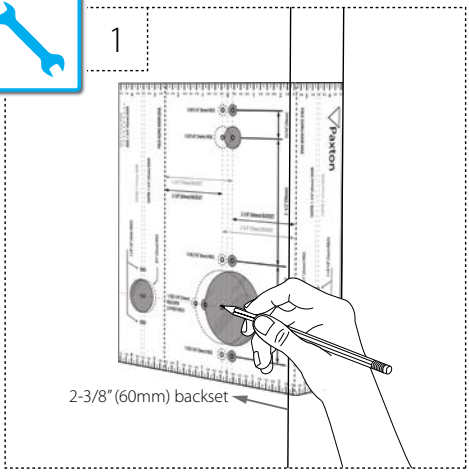

Step 1: Marking out

Tape template to door, mark holes then remove template for drilling.

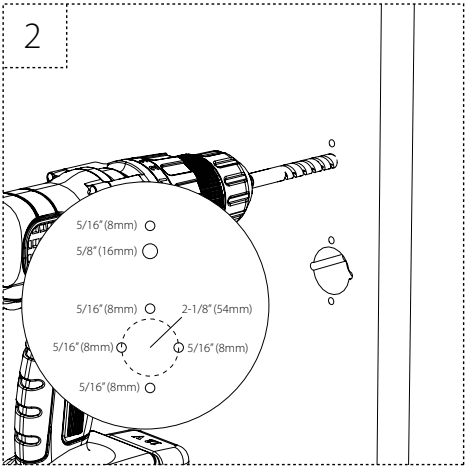

Step 2: Drilling

To ensure accuracy you should drill holes from both sides of the door towards the center. This avoids the risk of damaging the door face when the drill breaks through.

Make sure to include pilot holes either side of the central hole to ensure flush fitting of the motor plates.

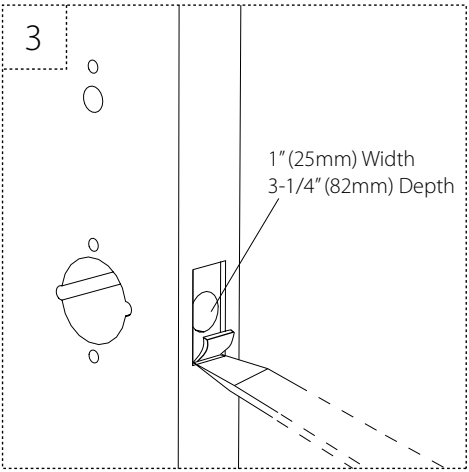

Step 3: Marking out and chiseling for latch

To install the latch; drill a 1" (25mm) hole, slide in the latch, then draw around the faceplate.

Remove the latch and score the outline with a knife to avoid splitting the wood when chiselling.

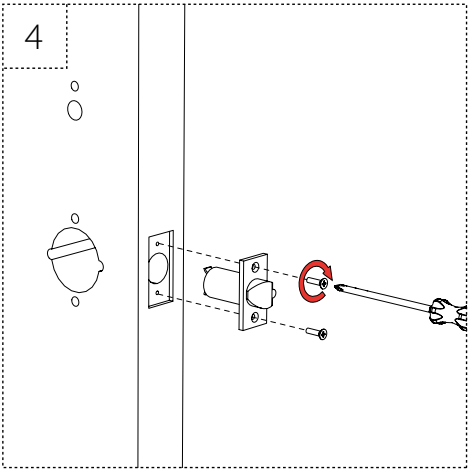

Step 4: Fitting the door latch

Attach the latch using the screws provided.

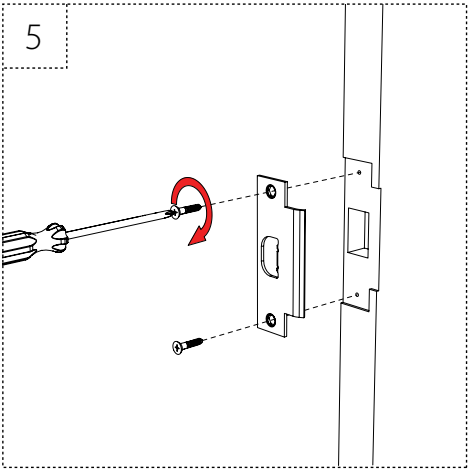

Step 5: Fitting the strike plate

Close the door to mark the horizontal line of the strike plate.

Measure one half of door thickness from door stop to mark vertical center line of the strike. Drill 1" (25.4mm) hole, 1/2" (12.7mm) deep at intersection of horizontal and vertical center lines.

Cut out jamb 3/32" (2.4mm) deep or until the strike is flush with jamb. Tighten the strike plate screws securely.

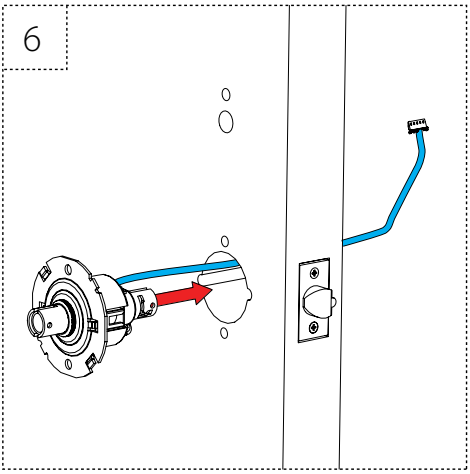

Step 6: Inserting the motor

Pass the motor through the central hole within the door, making sure to pass the motor lead through the hole first.

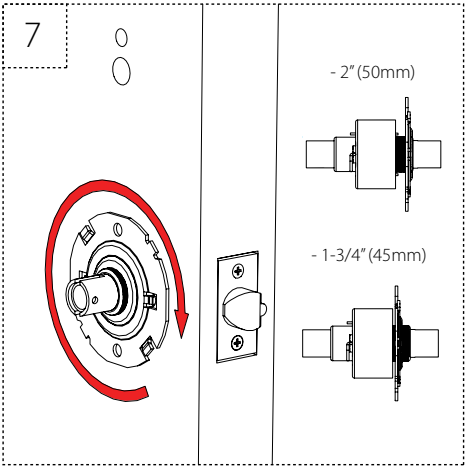

Step 7: Rotating the motor adjustment plate

To ensure that the motor adjustment plate is at the correct distance, rotate until it sits flush with the door and the motor has engaged properly.

Please refer to the diagram for the correct position of the plate for each door thickness.

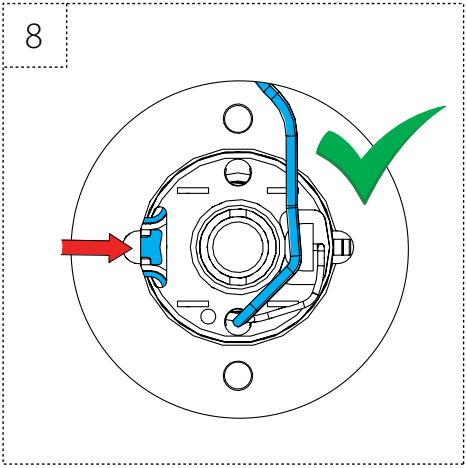

Step 8: Ensuring the latch engages

Make sure the tail of the latch is engaging with the motor retractor correctly as illustrated.

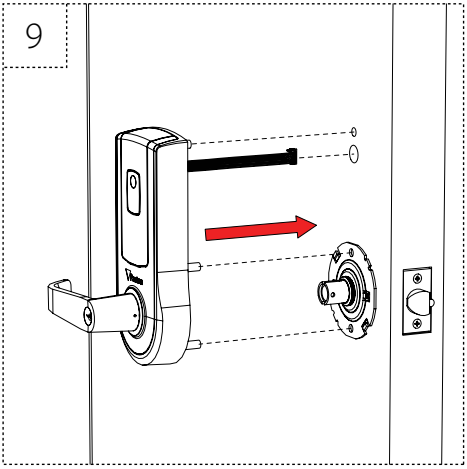

Step 9: Fitting the front housing

Line up front housing and ensure the body is flush to the door.

*PaxLock US is set up for RH doors by default – please see page 8 for LH operation.

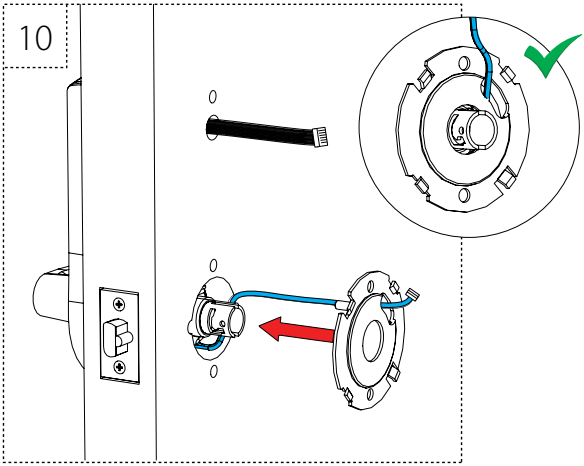

Step 10: Fitting the rear backplate assembly

Feed the motor cable through the hole in the motor back plate.

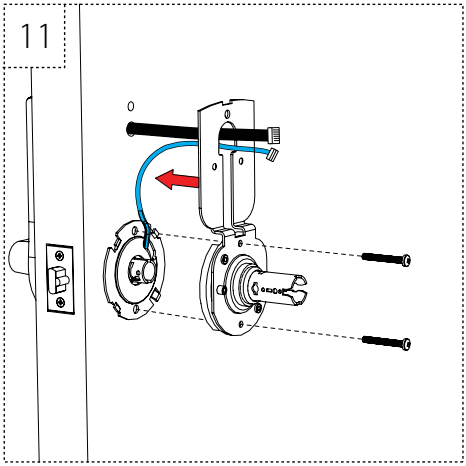

Step 11: Fitting the rear housing and motor wiring

Feed both the cables through the rear housing cutout and fit the lower long mounting screws.

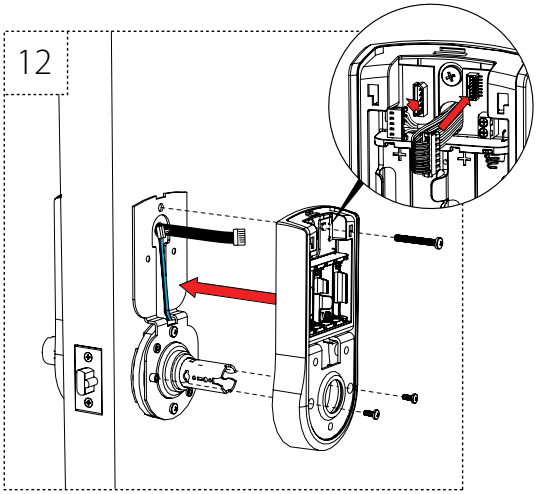

Step 12: Fitting the rear lock assembly and wiring

Fit top, long mounting screws and 2 lower short screws.

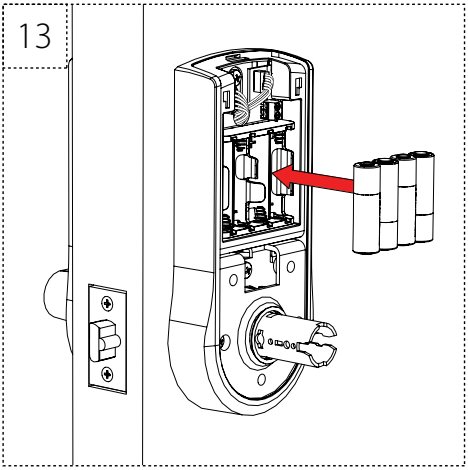

Step 10: Fitting the batteries

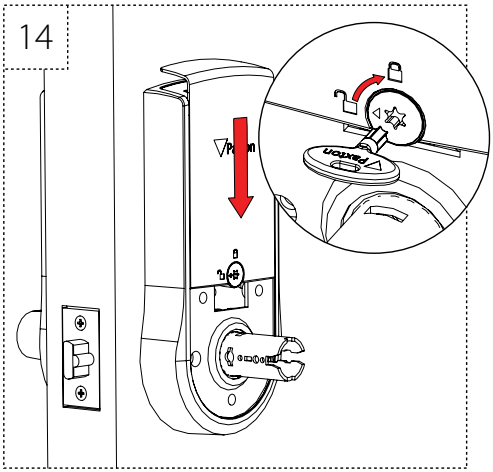

Step 11: Securing the rear cover

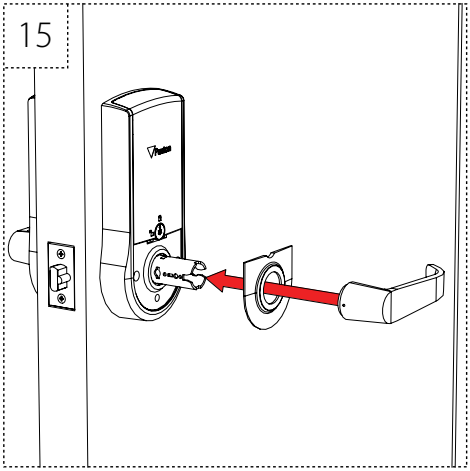

Step 12: Fitting the cover plate and handle

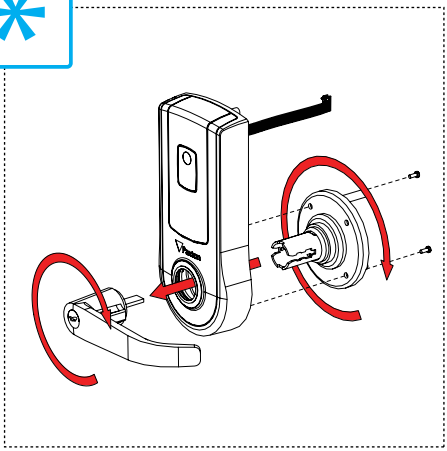

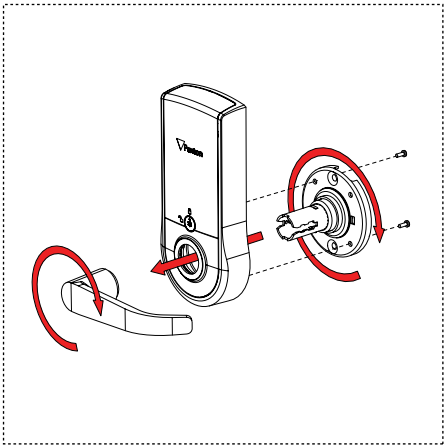

Optional step: Handle orientation for LH door

To configure for LH door operation, remove the front and rear handles using the handle removal pin. Unscrew the 4 screws securing the rose to the front/rear housings, rotate 180 degrees and screw back together.

Refit the handles, and push home until the axle engagement clicks.

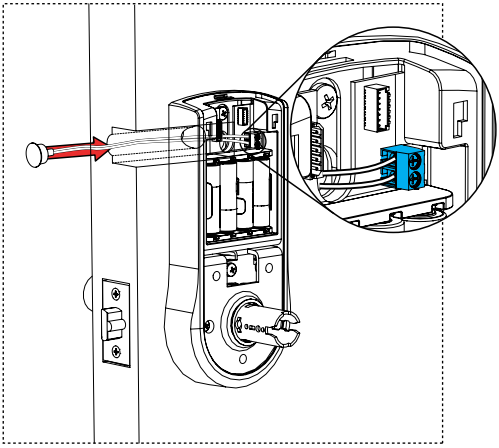

Optional step: Contact switch

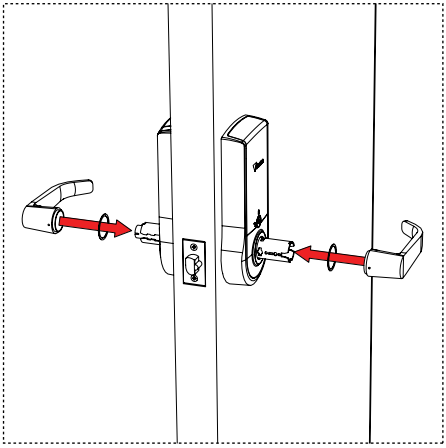

Optional step: Inserting the handle washers

Handle feel can be tightened with the use of the included washers.

Software installation

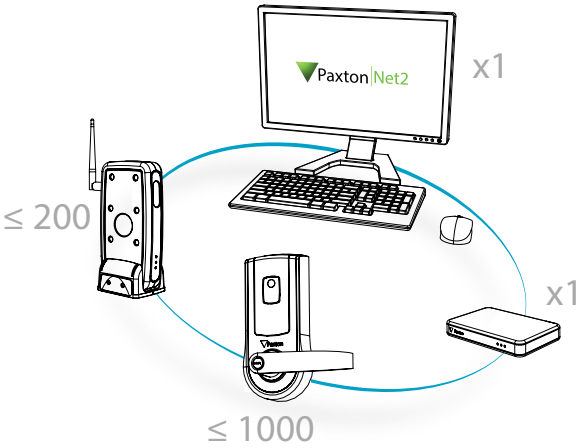

Net2 Pro/Net2 Lite: http://paxton.info/1438

Wireless Signal Range

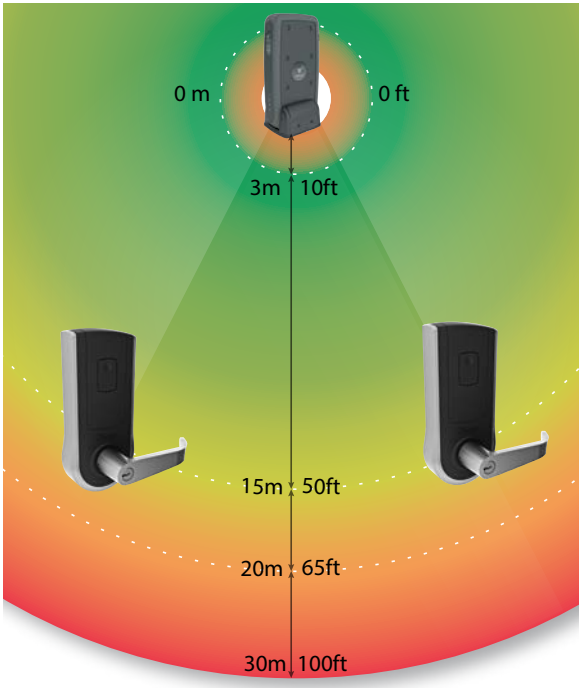

Enrolling a PaxLock

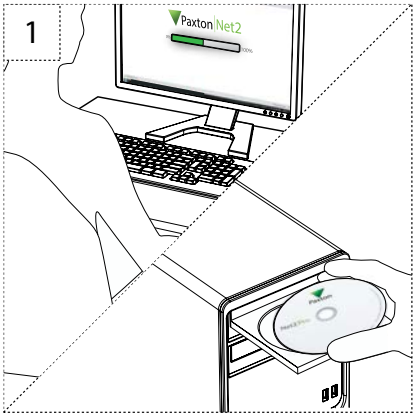

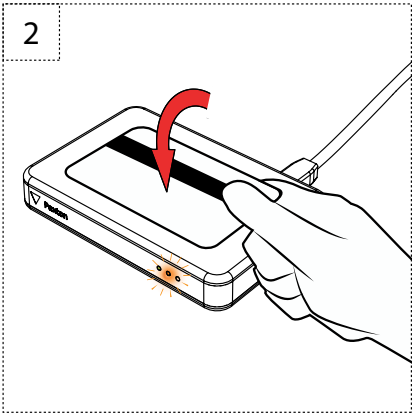

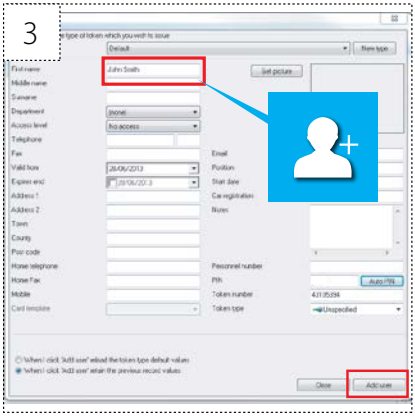

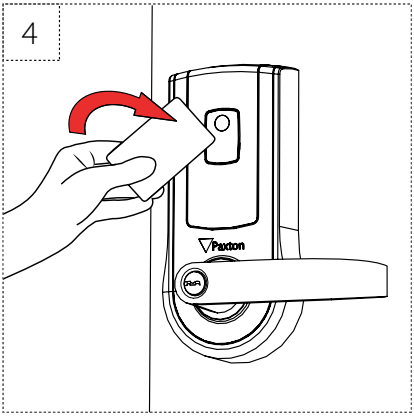

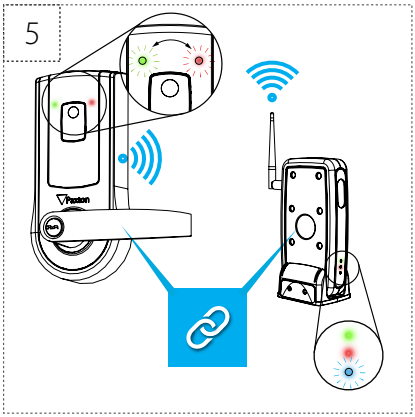

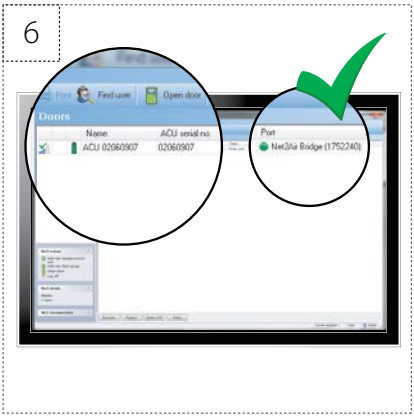

PaxLock reset

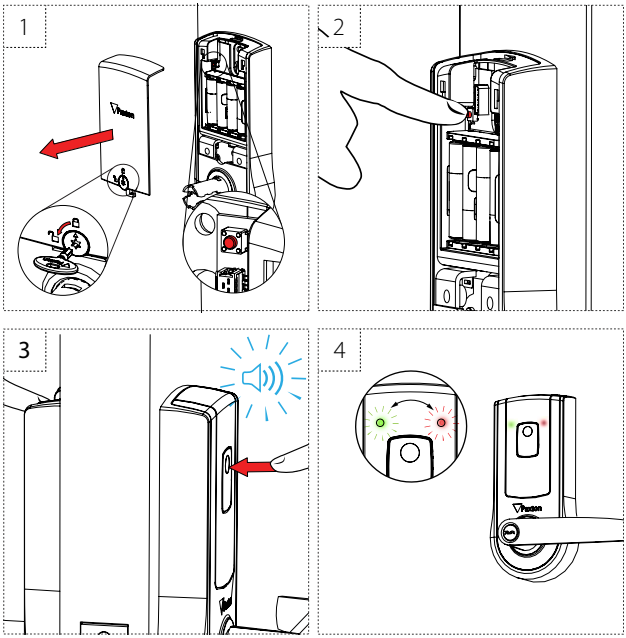

Battery replacement

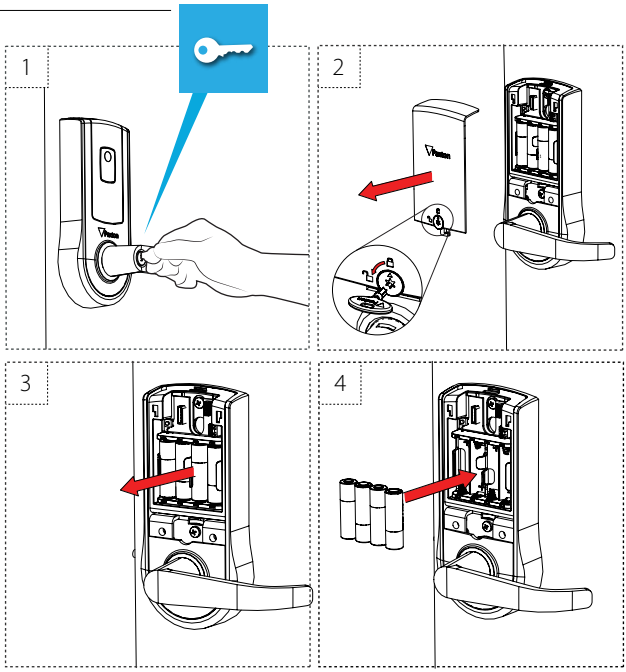

Specifications

Features	**Min**	**Typ**	**Max**
Maximum number of users/tokens			10,000
Access Levels			250
Time zones			64
Door unlock time	1 sec		60 secs
Recommended number of Paxlock's per Net2Air bridge			10
Net2Air bridge per system			200
Net2Air wireless range		50 ft	
Events stored			3,584
Environment	**Min**		**Max**
Battery type		4 x AA Alkaline	
Typical Battery life	20,000 operations		30,000 operations
Operating temperature	0 °C (-32 °F)		+55 °C (+131°F)
Moisture resistance		IPX4	
External Use		No	
Vandal resistance		No	
Dimensions	**Width**	**Height**	**Depth**
Total outside dimensions (includes handle clearance)	6″	8 1/2″	3″

UL has only evaluated the Operating temperature specification

+44 (0)1273 811011
support@paxton.co.uk
paxton.support

+44 (0)1273 811011
support@paxton.co.uk
paxton.support

+1(800) 672-7298
supportUS@paxton-access.com
usapaxton.support

+1(800) 672-7298
supportUS@paxton-access.com
usapaxton.support

+49 (0) 251 2080 6900
support@paxton-gmbh.de
paxton.gmbh.support

+31 (0)76 3333 999
support@paxton-benelux.com
paxton.benelux.support

+31 (0)76 3333 999
support@paxton-benelux.com
paxton.benelux.support

+31 (0)76 3333 999
support@paxton-benelux.com
paxton.benelux.support

+33 (0)157 329356
support@paxtonaccess.fr
paxton.support

+27 (0) 272 14276691
support@paxtonaccess.co.za
paxton.support

+44 (0)1273 811011
support@paxton.co.uk
paxton.support

The declaration of conformity is available on request. Contact details are provided at:
http://paxton.info/596

These products are not suitable for retail sale. All warranties are invalid if these products are not installed by a competent person.

North America:-

Product Compliance and limitations

Wiring methods shall be in accordance with the National Electrical Code (ANSI/NFPA70), local codes, and the authorities having jurisdiction.

To comply as a UL listed installation, the following conditions must apply:-

- Server based functions (Antipassback, Time and Attendance, etc) have not been evaluated by UL and cannot be used for UL 294 installations.
- Where an equivalent cable / wire is used it must be ' UL Listed 'All interconnecting devices must be UL Listed.
- The use of Wiegand readers and the configuration software has not been evaluated by 'UL'
- Door contact connections are limited to a maximum of 30m.
- IP rating not verified by UL.
- Indoor use only

UL listed to the following standards: ANSI/UL 10C compliant (20 min fire doors), CAN/ULC S104 compliant (20 min fire doors), UL 294 compliant, CSA C22.2 NO. 205-12 compliant

FCC Compliance

This device complies with Part 15 of the FCC Rules. Operation is subject to the following two conditions:

(1) this device may not cause harmful interference, and (2) this device must accept any interference received, including interference that may cause undesired operation.

Changes or modifications not expressly approved by the party responsible for compliance could void the user's authority to operate the equipment.

The Paxlock US has been designed and complies with the safety requirements for portable (<20cm) RF exposure in accordance with FCC rule part 2.1093 and KDB 447498 D01 as demonstrated in the RF exposure analysis. Installers must ensure that this device must not be co-located or operated in conjunction with any other antenna or transmitter except in accordance with FCC multi-transmitter product procedures.

IC Compliance

This device complies with Industry Canada licence-exempt RSS standard(s).

Operation is subject to the following two conditions:

(1) this device may not cause interference, and (2) this device must accept any interference, including interference that may cause undesired operation of the device.

The Paxlock US has been designed and complies with the safety requirements for RF exposure in accordance with RSS-102 as demonstrated in the RF exposure analysis.

Made in the UK

© Paxton Ltd 1.0.0

22/10/2014