SMART7
Installation and Operation
User Manual

SMART7 Installation and Operation User Manual

Publication Number: OM-20000181

Revision Level: 0A

Revision Date: June 2018

Firmware Version: 7.05 / OM7MR0500RN0000

Warranty

NovAtel Inc. warrants that its GNSS products are free from defects in materials and workmanship, subject to the conditions set forth on our web site: www.novatel.com/products/warranty/ and for the following time periods:

OEM7® Receivers	One (1) Year
GNSS Antenna Series	One (1) Year
Cables and Accessories	Ninety (90) Days
Software Warranty	One (1) Year

Return instructions

To return products, refer to the instructions found at: www.novatel.com/warranty-return.

Proprietary Notice

Information in this document is subject to change without notice and does not represent a commitment on the part of NovAtel Inc. The software described in this document is furnished under a licence agreement or non-disclosure agreement. The software may be used or copied only in accordance with the terms of the agreement. It is against the law to copy the software on any medium except as specifically allowed in the license or non-disclosure agreement.

No part of this manual may be reproduced or transmitted in any form or by any means, electronic or mechanical, including photocopying and recording, for any purpose without the express written permission of a duly authorized representative of NovAtel Inc.

The information contained within this manual is believed to be true and correct at the time of publication.

NovAtel, OEM7, SPAN, ALIGN, GLIDE, STEADYLINE, VEXXIS and NovAtel CORRECT are registered trademarks of NovAtel Inc.

SMART7, OEM7700 RTK ASSIST and NovAtel Connect are trademarks of NovAtel Inc.

All other product or brand names are trademarks of their respective holders.

© Copyright 2018 NovAtel Inc. All rights reserved. Unpublished rights reserved under International copyright laws.

Preliminary 3

Table of Contents

Figures

Tables

SMART7 Notices

Customer Support

Chapter 1 SMART7 Overview

1.1 Features and Models 11
1.2 SMART7 Connectors Overview 12
1.3 SMART7 LEDs 13
1.4 SMART7 Emulated Radar 15
1.4.1 Emulated Radar (ER) 15
1.5 Configuring the CAN Bus 15
1.5.1 Configuration Notes 15
1.5.2 Example of Enabling the CAN Bus 16
1.5.3 Example of Modifying the CAN Bus Parameters 16
1.5.4 Example of Detecting an Address Claim Failure and Reconfiguring 16
1.5.5 Address Claim Procedure 16

Chapter 2 SMART7 Installation Overview

2.1 Power Supply Requirements for the SMART7 19
2.2 Mounting and Orienting the SMART7 19
2.2.1 Mounting 19
2.2.2 Orienting 20
2.3 Connect the SMART7 to Data Communication Equipment 21
2.3.1 Wi-Fi 21
2.3.2 Ethernet Port 21
2.3.3 CAN Bus Port 22
2.4 Connect I/O Signals to the SMART7 22
2.5 Connect Power to the SMART7 22
2.5.1 Fuse for the Power Supply 22
2.6 Check that the SMART7 is Working 23

APPENDIX A SMART7 Technical Specifications

A.1 SMART7 Performance Specifications 26
A.2 SMART7 Mechanical Specifications 29
A.3 SMART7 Environmental and Electrical Specifications 30
A.4 SMART7 Data Communication Specifications 31
A.5 SMART7 Strobe Specifications 31
A.6 SMART7 Interface Cable 33
A.7 SMART7 Mounting Plate Specifications 35

Figures

Figure 1: SMART7 with Ethernet Model 12
Figure 2: SMART7 Interface Connector 12
Figure 3: SMART7 Ethernet Connector (model dependent) 12
Figure 4: SMART7 LEDs Location 13
Figure 5: SMART7 Installation 18
Figure 6: SMART7 Magnetic Mounting Plate 20
Figure 7: SMART7 Orientation 20
Figure 8: SMART7 Dimensions 29
Figure 9: SMART7-SPAN Center of Navigation 29
Figure 10: SMART7 Interface Cable 33
Figure 11: SMART7 Mounting Plate Dimensions (Optional) 35

Preliminary 3

Tables

Table 1: Model Variants 11
Table 2: Ethernet Connector Pin Outs 13
Table 3: SMART7 Status Indicators 13
Table 4: Wi-Fi LED 14
Table 5: Ethernet LED 14
Table 6: Status LED 14
Table 7: SMART7 Physical Description 25
Table 8: SMART7 Receiver Performance 26
Table 9: SMART7 IMU Performance 28
Table 10: SMART7 Environmental Specifications 30
Table 11: SMART7 Power Requirements 30
Table 12: Data Communications Interfaces 31
Table 13: SMART7 Strobes Description 32
Table 14: SMART7 Connector Pin Out 33
Table 15: 14-Pin Interface Connector 34

Preliminary 3

SMART7 Notices

The following notices apply to the SMART7 device.

> Changes or modifications to this equipment, not expressly approved by NovAtel Inc., could void the user's authority to operate this equipment.

FCC

This device complies with part 15 of the FCC Rules. Operation is subject to the following two conditions: (1) this device may not cause harmful interference, and (2) this device must accept any interference received, including interference that may cause undesired operation.

SMART7 has been tested and found to comply with the radiated and conducted emission limits for a Class B digital device. The Class B limits are designed to provide reasonable protection against harmful interference in a residential installation.

The equipment listed generates, uses and can radiate radio frequency energy and, if not installed and used in accordance with the instructions, may cause harmful interference to radio communications. However, there is no guarantee that interference will not occur in a particular installation. If this equipment does cause harmful interference to radio or television reception, which can be determined by turning the equipment off and on, the user is encouraged to try to correct the interference by one or more of the following measures:

- Re-orient or relocate the SMART7
- Increase the separation between the equipment and the SMART7
- Connect the equipment to an outlet on a circuit different from that to which the SMART7 is connected
- Consult the dealer or an experienced radio/TV technician for help

> The SMART7 has been authorized for use in Mobile applications. At least 20 cm (8 inches) of separation between the SMART7 and the User must be maintained at all times.

Innovation, Science and Economic Development (ISED) Canada

SMART7 Class B digital device complies with Canadian ICES-003.

SMART7 appareil numérique de la classe B est conforme à la norme NMB-003 du Canada.

This device complies with ISED license-exempt RSS-GEN and RSS-247. Operation is subject to the following two conditions: (1) this device may not cause interference and (2) this device must accept any interference, including interference that may cause undesired operation of the device.

Cet appareil est conforme à la norme ISED RSS-GEN et RSS-247. Son fonctionnement est soumis aux deux conditions suivantes: (1) cet appareil ne doit pas provoquer d'interférences et (2) cet appareil doit accepter toute interférence, y compris les interférences pouvant entraîner un fonctionnement indésirable de l'appareil.

Preliminary 3

> The SMART7 has been authorized for use in Mobile applications. At least 20 cm (8 inches) of separation between the SMART7 and the User must be maintained at all times.
>
> Le SMART7 a été autorisé pour une utilisation dans les applications mobiles. Au moins 20 cm (8 pouces) de séparation entre le SMART7 et l'utilisateur doit être maintenue à tous fois.

Wi-Fi

SMART7 contains a Wi-Fi radio with the following approvals:

- FCC ID: UTU-01019715
- IC: 129A-01019715

European Union (EU)

SMART7 Wi-Fi

NovAtel Inc. declares that the SMART7 Wi-Fi transceiver is in compliance with Directive 2014/53/EU (Radio Equipment).

The full text of the EU Declaration of Conformity may be obtained from the NovAtel web site at:

www.novatel.com/products/compliance/eu-declaration-of-conformity

Radio Information

Description of Service: Wi-Fi (802.11b/g/n)

Operational Frequency: 2400 MHz to 2480 MHz

Modulation: OFDM

Rated Power: 13.4 dBm e.i.r.p

The full text of the EU Declaration of Conformity may be obtained from the NovAtel web site at:

www.novatel.com/products/compliance/eu-declaration-of-conformity

Ethernet Port

> The Ethernet port is a safety extra-low voltage (SELV) circuit only and is suitable for connection to another SELV circuit. Do not connect them to Telecommunications Network Voltage (TNV) circuits.

WEEE Notice

If you purchased your SMART7 product in Europe, please return it to your dealer or supplier at the end of its life. The objectives of the European Community's environment policy are, in particular, to preserve, protect and improve the quality of the environment, protect human health and utilise natural resources prudently and rationally. Sustainable development advocates the reduction of wasteful consumption of natural resources and the prevention of pollution. Waste electrical and electronic equipment (WEEE) is a regulated area. Where the generation of waste

Preliminary 3

cannot be avoided, it should be reused or recovered for its material or energy. WEEE products may be recognized by their wheeled bin label ( ).

See www.novatel.com/products/compliance/environmental-compliance for more information.

RoHS

The SMART7 is in conformity with Directive 2011/65/EU of the European Parliament and of the council of 8 June 2011 on the restriction of the use of certain hazardous substances in electrical and electronic equipment.

REACH

The SMART7 is compliant with Regulation (EC) No. 1907/2006 of the European Parliament and the Council of 18 December 2006 concerning the Registration, Evaluation, Authorization and Restriction of Chemicals (REACH). The candidate list of Substances of Very High Concern (SVHC) published by the European Chemical Agency (ECHA) is available at: https://echa.europa.eu-/candidate-list-table

Cables may contain DEHP (CAS Number 117-81-7) in concentrations above 0.1% w/w.

Conventions

The following conventions are used in this manual:

Information that supplements or clarifies text.

A caution that actions, operation or configuration may lead to incorrect or improper use of the hardware.

A warning that actions, operation or configuration may result in regulatory non-compliance, safety issues or equipment damage.

Preliminary 3

Customer Support

NovAtel Knowledge Base

If you have a technical issue, visit the NovAtel Support page at www.novatel.com/support. Through the *Support* page, you can contact Customer Support, find papers and tutorials or download current manuals and the latest firmware.

Before Contacting Customer Support

Before you contact NovAtel Customer Support about a software problem, perform the following steps:

> If logging data over an RS-232 serial cable, ensure that the configured baud rate can support the data bandwidth (see **SERIALCONFIG** command). NovAtel recommends a minimum suggested baud rate of 115200 bps.

1. Log the following data to a file on your computer for 15 minutes:

```
RXSTATUSB onchanged
RAWEPHEMB onchanged
GLORAWEPHEMB onchanged
BESTPOSB ontime 1
RANGEB ontime 1
RXCONFIGA once
VERSIONA once
```

   For SPAN systems, add the following logs to the above list in the file created on your computer:

```
RAWIMUSXB onnew
INSUPDATESTATUSB onnew
INSPVAXB ontime 1
INSCONFIGA once
```

2. Send the data file to NovAtel Customer Support: support@novatel.com
3. You can also issue a **FRESET** command to the receiver to clear any unknown settings.

> The **FRESET** command will erase all user settings. You should know your configuration (by requesting the RXCONFIGA log) and be able to reconfigure the receiver before you send the **FRESET** command.

If you are having a hardware problem, send a list of the troubleshooting steps taken and the results.

Contact Information

Log a support request with NovAtel Customer Support using one of the following methods:

Log a Case and Search Knowledge:

Preliminary 3

Website: www.novatel.com/support

Log a Case, Search Knowledge and View Your Case History: (login access required)

Web Portal: https://novatelsupport.force.com/community/login

E-mail:

support@novatel.com

Telephone:

U.S. and Canada: 1-800-NOVATEL (1-800-668-2835)

International: +1-403-295-4900

Preliminary 3

Chapter 1 SMART7 Overview

The SMART7 is a high performance GNSS receiver and antenna, capable of receiving and tracking all current GNSS signals on a maximum of 555 channels. SBAS (Satellite Based Augmentation Systems) includes WAAS (North America), EGNOS (Europe) and MSAS (Japan). SBAS support is standard. Refer to An Introduction to GNSS (on our website at www.novatel.com/an-introduction-to-gnss) for an overview of each of the above signal types. The SMART7 features Light Emitting Diodes (LEDs) for status indication.

Once properly powered, the SMART7 begins operating as a fully functional GNSS system.

1.1 Features and Models

The main features of the SMART7 are:

- an enhanced high performance multi-frequency, multi-constellation receiver
- a high performance GNSS multi-frequency, multi-constellation antenna
- a CAN port
- three (3) RS-232 COM ports
- up to three (3) LED status indicators (model dependent)
- a water and dust tight enclosure
- enhanced interference mitigation

The SMART7 is available in several different hardware configuration and firmware models whose additional features may include:

- Emulated Radar Output
- Terrain Compensation
- Wi-Fi interface
- Ethernet port
- Integrated SPAN GNSS+INS functionality
- Web UI

Contact NovAtel Sates at www.novatel.com/where-to-buy/contact-us for information regarding available models, upgrading a model to increase feature/functionality or go to www.novatel.com/support/info/documents/925 to obtain product updates. Refer toFirmware Updates and Model Upgrades for details.

Table 1: Model Variants

Product Hardware Model	Model
SMART7	SM7
SMART7 with Wi-Fi and Ethernet	SM7-i
SMART7 with Wi-Fi	SM7-w
SMART7 with SPAN IMU	SM7-SP
SMART7 with SPAN IMU and Wi-Fi	SM7-SPi

Preliminary 3

> Tilt is a model variant available on all models with the exception of the SPAN IMU variant.

Figure 1: SMART7 with Ethernet Model

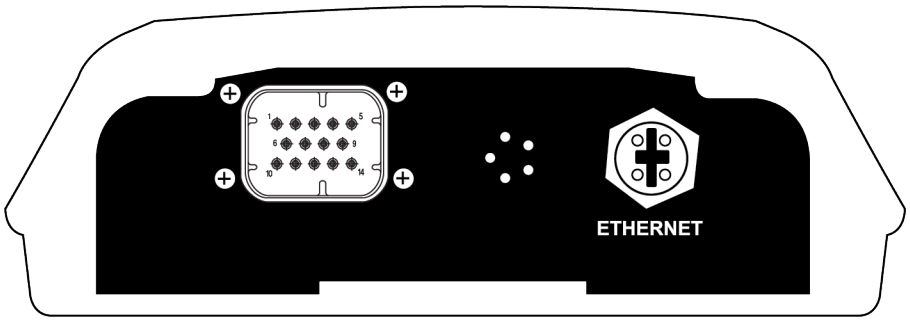

1.2 SMART7 Connectors Overview

All SMART7 models use the same connector for power and communication. Refer to *Table 14: SMART7 Connector Pin Out* on page 33 for cable dimensions and pin outs.

Figure 2: SMART7 Interface Connector

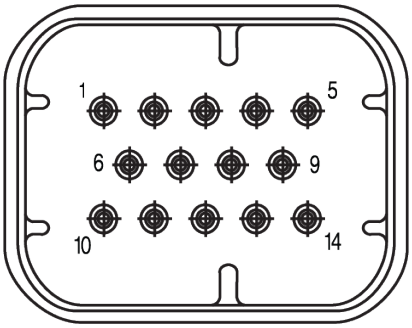

The SMART7 Ethernet model has a M12 D-code female.

Figure 3: SMART7 Ethernet Connector (model dependent)

Preliminary 3

Table 2: Ethernet Connector Pin Outs

From P1	To J1	Signal Name
1	1	Tx+
2	2	Rx+
3	3	Tx-
4	4	Rx-
Shell	Shell	Chassis GND

1.3 SMART7 LEDs

The SMART7 has up to three LEDs (model dependent) to indicate receiver status.

The following tables provide information about the SMART7 LEDs and their states.

Figure 4: SMART7 LEDs Location

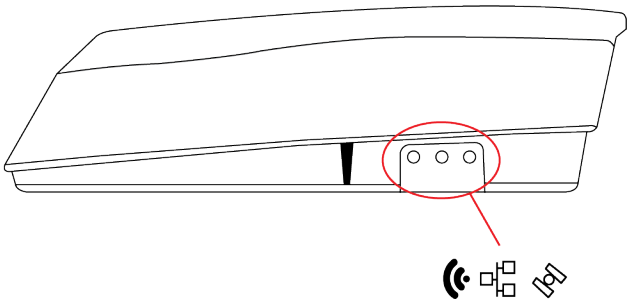

Table 3: SMART7 Status Indicators

Label	Description
	Wi-Fi (AP, Concurrent or Client)
	Ethernet (DATA)
	Status (Power/GNSS)

Preliminary 3

Table 4:
Wi-Fi LED

State	Description
Green Solid	Configured as AP (default)
Green Slow Flash	AP and connected to a Client or Concurrent
Blue Solid	Configured as Concurrent
Blue Slow Flash	Concurrent and connected to an AP or Client
White Solid	Configured as Client
While Slow Flash	Client and connected to an AP or Concurrent
Yellow Slow Flash	Firmware Upgrade
Red Solid	No Configuration
Red Fast Flash	Error State or Dead

Table 5: Ethernet LED

State	Description
Green Solid	Link
Green Slow Flash	Active (receiving or transmitting)

Table 6: Status LED

State	Description
Green Solid	RTK/PPP Solution good or RTK/PPP/INS Solution good
Green Slow Flash	PPP or RTK Converging
Yellow Solid	WAAS/Single Point
Yellow Slow Flash (1 Hz)	Tracking
Yellow Fast Flash (3 Hz)	Initialized (ME_READY)
Red Solid	Power On/Error/Reset
Red Slow Flash (1 Hz)	Position Error
Red Fash Flash (3 Hz)	Solution Error

Preliminary 3

1.4 SMART7 Emulated Radar

1.4.1 Emulated Radar (ER)

A typical radar sensor emits radio beams that bounce off the ground and computes ground speed based on the speed at which objects are passing in front of the sensor. The output of the sensor is a digital pulse, the frequency of which is proportional to the vehicle's ground speed. This is often used in agricultural applications such as planting and spraying. The SMART7 eliminates the need for separate ground-sensing radar equipment by converting the GPS-derived velocity to proportional frequency output. The following emulated radar signal parameters can be configured by the customer:

- Frequency Step: Specifies how the frequency output relates to the vehicle speed.
- Signal Update Rate: Specifies how often the frequency output is updated to match the vehicle speed.
- Response Mode: Specifies how quickly changes in velocity are reflected in the frequency output. Setting a slower response mode reduces spikes (noise) in the velocity but increases latency. Setting a higher response mode reduces latency, but may result in noisier frequency output.

Refer to RADARCONFIG command for detailed information.

After it is configured using the RADARCONFIG command, Emulated Radar (ER) pulses are output through the SMART7 interface cable and theRADARSTATUS log.

1.5 Configuring the CAN Bus

To enable an OEM7 receiver to communicate over the CAN bus, configure CAN and place the receiver *on bus*, triggering a J1939 *Address Claim Procedure*.

1. Use the **J1939CONFIG** command to specify J1939 NAME and desired address.
2. Use the **CANCONFIG** command to place the receiver *on bus*.
3. Optionally, use the **J1939STATUS** log to monitor CAN status on the receiver.

1.5.1 Configuration Notes

- The **J1939CONFIG** and **CANCONFIG** commands can be entered in any order. After the **CANCONFIG** command is used to place the receiver on the CAN bus, **J1939CONFIG** commands take effect immediately whether entered before or after CANCONFIG. Until then, J1939CONFIG can be entered many times to change the settings because they have not taken affect yet (the receiver is not yet on the bus).
- The J1939 Address claim procedure is executed if and only if both J1939CONFIG NODEx CANx and CANCONFIG CANx ON are entered.
- Use J1939STATUS log to determine the receiver's CAN status and the actual address claimed by a particular node.
- Once the receiver is "on bus", it must be taken "off-bus" using CANCONFIG for any further configuration changes using J1939CONFIG.
- The receiver is fully "on-bus" only once the J1939 address has been successfully claimed. This is reported as "CLAIMED" status by J1939STATUS log.

Preliminary 3

- No messages will be sent or received until the receiver is "online" and an address is claimed. Outgoing messages are not buffered; they are discarded until the receiver is online.

1.5.2 Example of Enabling the CAN Bus

1. **LOG J1939STATUS ONCHANGED**
2. **J1939CONFIG NODE1 CAN1 <addresses>**
3. **CANCONFIG CAN1 ON 250K**
4. **SAVECONFIG**

```
< J1939STATUS NODE1 DISABLED 0 0xFE
< J1939STATUS NODE1 CLAIMING 1 <address>
< J1939STATUS NODE1 CLAIMED <attempt count> <address>
```

1.5.3 Example of Modifying the CAN Bus Parameters

1. **LOG J1939STATUS ONCHANGED**
2. **CANCONFIG CAN1 OFF**
3. **J1939CONFIG NODE1 CAN1 <addresses>**
4. **CANCONFIG CAN1 ON**
5. **SAVECONFIG**

```
< J1939STATUS NODE1 DISABLED 0 0xFE
< J1939STATUS NODE1 CLAIMING 1 <address>
< J1939STATUS NODE1 CLAIMED <attempt count> <address>
```

1.5.4 Example of Detecting an Address Claim Failure and Reconfiguring

1. **LOG J1939STATUS ONCHANGED**
2. **J1939CONFIG NODE1 CAN1 <addresses>**
3. **CANCONFIG CAN1 ON**

```
< J1939STATUS NODE1 DISABLED 0 0xFE
< J1939STATUS NODE1 CLAIMING 1 <address>
< J1939STATUS NODE1 FAILED <attempt count> 0xFE
```

4. **CANCONFIG CAN1 OFF**

```
< J1939STATUS NODE1 DISABLED 0 0xFE
```

5. **J1939CONFIG NODE1 CAN1 <addresses>**
6. **CANCONFIG CAN1 ON**

```
< J1939STATUS NODE1 CLAIMING 1 <address>
< J1939STATUS NODE1 CLAIMED <attempt count> <address>
```

1.5.5 Address Claim Procedure

To become operational on the CAN bus, an OEM7 receiver must claim a J1939 address. The preferred address and a range of alternative addresses are specified using the **J1939CONFIG**

Preliminary 3

command. When a configured receiver is placed *on bus*, it may make multiple attempts to claim an address. It may also have its address bumped by a higher priority device claiming the same address.

While the device is attempting to claim an address, the **J1939STATUS** log reports a status of *CLAIMING* and automatically tries to claim the next allowed address. Depending on the **J1939CONFIG** parameters, an address different from the **J1939CONFIG** *preferred address* may be claimed or the address claim procedure can fail entirely. If no addresses could be claimed, a *FAILED* status is reported and the receiver takes no further action. To recover from this failure, take the receiver *off bus* using the **CANCONFIG** command and change the CAN address configuration using the **J1939CONFIG** command.

The address can also be assigned using J1939 *Commanded Address* message sent by another ECU on the bus, such as a tester unit. The commanded address always overrides the address specified using **J1939CONFIG** command. When the *Commanded Address* is received, the receiver reports a status of *CLAIMING* followed by *CLAIMED*. Restarting CAN using the **J1939CONFIG** command or **CANCONFIG** command clears the commanded address; the Address Claim procedure will be executed again based on parameters specified in the **J1939CONFIG** command.

Preliminary 3

Chapter 2 SMART7 Installation Overview

When the appropriate equipment is selected, complete the following steps to set up and begin using the NovAtel GNSS receiver.

Figure 5: SMART7 Installation

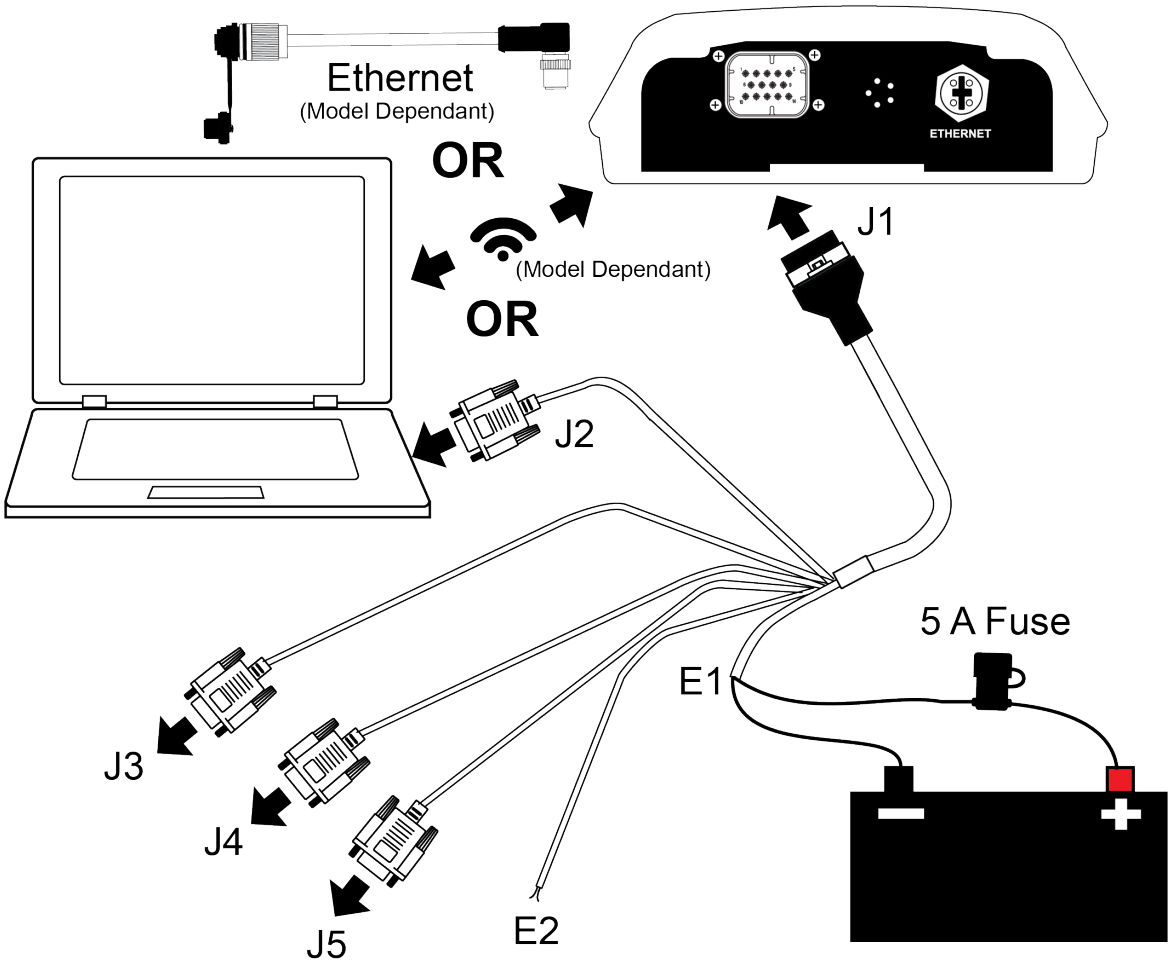

1. Mount the SMART7 receiver. Refer to *Mounting and Orienting the SMART7* on the next page for mounting details.
2. Connect the receiver to other GNSS system components, such as a computer or data terminal, using the communication ports or Wi-Fi.
   See *Connect the SMART7 to Data Communication Equipment* on page 21 to Data Communication Equipment.
3. Connect other GNSS system components using the input and output lines.
   See *SMART7 Interface Cable* on page 33.
4. Connect the supplied interface cable to the interface connector on the receiver and then connect the power cable to the power supply.
   Ensure a 5 A slow blow fuse is incorporated in the power wiring. Refer to *SMART7 Interface*

Preliminary 3

Cable on page 33 and SMART7 Additional Equipment Required for fuse recommendations. See *Connect Power to the SMART7* on page 22 and *Power Supply Requirements for the SMART7* below for details.

Refer to *SMART7 LEDs* on page 13 for details of SMART7 LED states.

> Refer to SMART7 Additional Equipment Required for fuse recommendations.

2.1 Power Supply Requirements for the SMART7

The SMART7 requires a power supply that provides:

- a voltage in the range of +7 to +30 VDC
- at least 15 W of power (typical use: 3 W to 7 W)

See *SMART7 Environmental and Electrical Specifications* on page 30 for more power supply specifications.

The SMART7 has an internal power module that:

- filters and regulates the supply voltage
- protects against over-voltage, over-current and high-temperature conditions
- provides automatic reset circuit protection

> If the voltage supplied is below the minimum specification, the receiver suspends operation. If the voltage supplied is above the maximum specification, the receiver may be permanently damaged, voiding the warranty.
>
> The supply must be capable of providing enough current to operate the SMART7, including the initial inrush transient. The supply must also be current limited to 5 A with an external fuse.

> The amount of power required depends on the number of constellations and signals tracked, and the features enabled.

Refer to *SMART7 Interface Cable* on page 33 for details about the power cable.

2.2 Mounting and Orienting the SMART7

2.2.1 Mounting

Mount on a secure, stable structure capable of safe operation in the specific environment.

- If installing on a vehicle, mount the SMART7 on the vehicle roof, ideally close to the pivot point of the vehicle. The SMART7 must be mounted with the connector facing the rear of the vehicle.

Preliminary 3

Figure 6: SMART7 Magnetic Mounting Plate

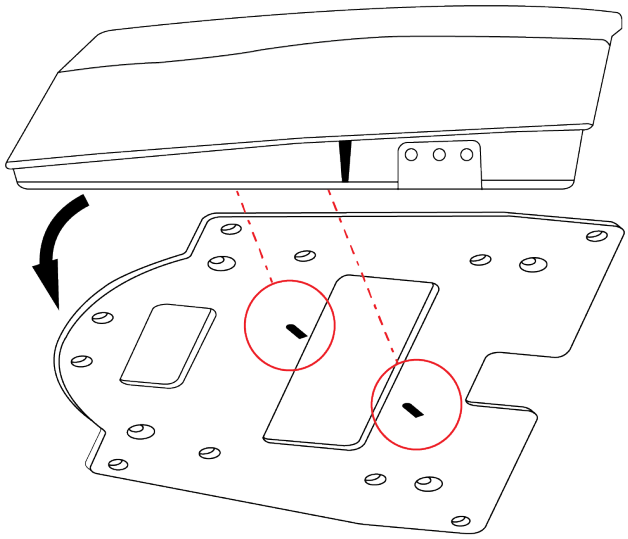

> The SMART7 must be rigidly secured to the vehicle to avoid errors caused by vibration and motion.

- If installing in a stationary location, mount the SMART7 in a location that has a clear view of the sky so that each satellite above the horizon can be tracked without obstruction. For more information, refer to An Introduction to GNSS.

Refer to *SMART7 Mounting Plate Specifications* on page 35 for plate dimensions and mounting hole locations.

2.2.2 Orienting

Ensure SMART7 the is oriented with the connector(s) facing the back of the vehicle.

Figure 7: SMART7 Orientation

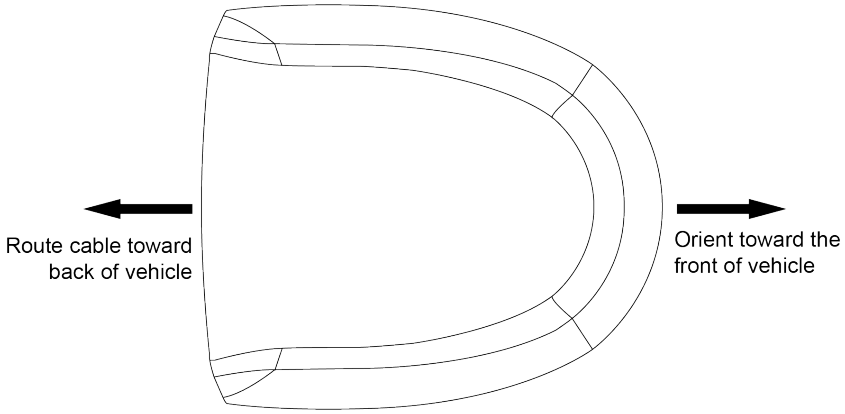

Preliminary 3

2.3 Connect the SMART7 to Data Communication Equipment

The SMART7 can communicate with other devices in the system, such as computers Wi-Fi or Ethernet ports. The SMART7 also has a CAN bus port for communication with other CAN bus compatible devices.

> Wi-Fi and Ethernet are model dependent.

2.3.1 Wi-Fi

The SMART7 has a Wi-Fi Access Point that is enabled by default. This provides for easy connection to any laptop/tablet/smartphone with Wi-Fi capability and a web browser.

1. Once the receiver is installed and powered, use a Wi-Fi capable laptop/tablet/smartphone to locate the SMART7 in the list of detected Wi-Fi Networks and establish a connection.

   The SMART7 SSID is printed on a label on the bottom of the receiver. The format of the SSID is *SMART7-<Receiver PSN>*, e.g. "SMART7-ABCDEF1234567".

2. A prompt for a password will appear. The default password is printed on a label on the bottom of the SMART7. The default password is specific to that SMART7 receiver.
3. Open up a web browser and enter any web address (e.g., novatel.com). The SMART7 automatically redirects you to the NovAtel Web User Interface which is hosted on the SMART7.

> NovAtel Web User Interface is compatible with recent versions of Chrome, Firefox, Internet Explorer and Safari.

> Cookies should always be on and never blocked on the browser being used to connect to the Wi-Fi network.

For more information about using the NovAtel Web User Interface, refer to the online OEM7 documentation (docs.novatel.com/OEM7).

To change the configuration of the Wi-Fi interface, including password, refer to Wi-Fi Configuration.

2.3.2 Ethernet Port

The SMART7 has an M12 D-code (male) socket that supports 10Base-T/100Base-TX Ethernet for communications with external data communications equipment such as computers and data loggers. The Ethernet port supports IPv4 Internet layer, TCP/IP transport, ping and connection from a Telnet client. Users can conduct remote debugging, accept MRTCA (modified RTCA) data and download firmware. OEM7 receivers are also equipped with NTRIP Version 2.0 (Networked Transport of RTCM via Internet Protocol) client and server capability.

Refer to Ethernet Configuration for instructions on configuring Ethernet and NTRIP.

Preliminary 3

2.3.3 CAN Bus Port

The SMART7 has a CAN Bus port available on the 14-Pin interface connector.

To connect to the CAN Bus port:

1. Connect the SMART7 optional accessory cable or a custom made cable, to the main 14-Pin interface connector.

   For information about the SMART7 interface cable, see *SMART7 Interface Cable* on page 33. This section also has the connector pin out and connector recommendations for making a custom cable.

   The SMART7 interface cable, see *SMART7 Interface Cable* on page 33, is an accessory that provides individual wires for the CAN Bus signals.

2. Connect the CAN leads to the CAN Bus.

> The SMART7 CAN bus port is unterminated. If the SMART7 is at the end of the bus, then the connecting cable must have 120 ohms integrated into the cable between CANH and CANL in close proximity to the main 14-Pin interface connector.

2.4 Connect I/O Signals to the SMART7

The SMART7 has several inputs and outputs, also referred to as strobes, that provide status and synchronization signals.

- Pulse Per Second (PPS) output
- Emulated Radar Output

For more information about the I/O signals, refer to the .

To access the I/O signals, connect the SMART7 interface cable or a custom made cable, to the main 14-Pin interface connector. Refer to *SMART7 Interface Cable* on page 33 for connector pin out and other details.

2.5 Connect Power to the SMART7

To connect power to the SMART7:

1. Connect the SMART7 User Interface Cable (01019944) to the 14-Pin connector on the back of the SMART7. See *SMART7 Interface Cable* on page 33 for information about this cable.
2. Connect the bare wires of the power cable to a 7 to 30 VDC power supply.
   For details about the power supply required, see *Power Supply Requirements for the SMART7* on page 19

2.5.1 Fuse for the Power Supply

Install a user supplied 5 A slow blow fuse in the positive line of the connection to the power source to protect the power supply wiring and your warranty.

Preliminary 3

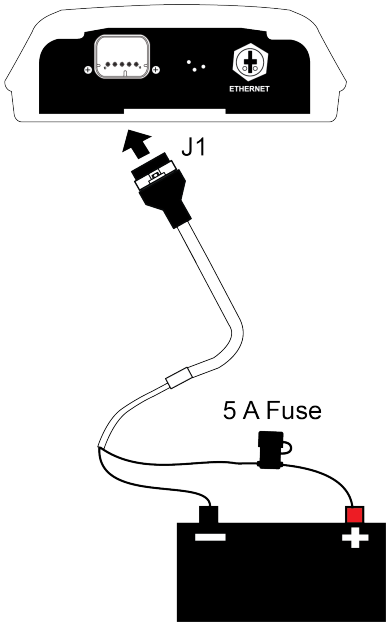

Refer to SMART7 Additional Equipment Required for fuse recommendations.

2.6 Check that the SMART7 is Working

After the SMART7 is installed, powered up and use the following procedure to ensure the receiver is operating.

1. Check that the Status LED Fast Flashes Yellow (in the ME_READY state).

   The Status LED may briefly flash as Red before moving quickly to the Fast Flash Yellow.

   See *SMART7 LEDs* on page 13 for the location of the LEDs.

2. Send the following command:

```
LOG VERSION
```

   The VERSION log is returned.

```
[COM1]<VERSION COM1 0 90.5 UNKNOWN 0 19.425 0244c000 3681 14843
< 8
< GPSCARD "DDNRNNTBE" "BMHR18040058F" "OEM7700-1.01"
"OM7CR0501EN0001" "OM7BR0002RB0000" "2018/May/29" "12:03:27"
< OEM7FPGA "" "" "" "OMV070001RN0000" "" "" ""
< WIFI "RS9113" "" "" "1.7.0" "" "2018/May/29" "12:03:54"
< APPLICATION "" "" "" "ES7AR0501EN0001" "" "2018/May/29"
"12:03:39"
< DEFAULT_CONFIG "" "" "" "ES7CR0501EN0001" "" "2018/May/29"
"12:03:49"
< PACKAGE "" "" "" "ES7PR0501EN0001" "" "2018/May/29" "12:03:44"
< ENCLOSURE "" "NMPX18130002Z" "0.0.0.0" "" "" "" ""
< REGULATORY "US" "" "" ""
```


Preliminary 3

3. Check that the Time Status is **FINESTEERING** which represents that time is fine set and being steered.
4. Check the Receiver Status word (02004020 in this example). If the lowest bit (bit 0) is set, the receiver has errors.

> For information about the other digits in Receiver Status word, refer to the **RXSTATUS** log in the OEM7 Commands and Logs Reference Manual.

Preliminary 3

APPENDIX A SMART7 Technical Specifications

Table 7: SMART7 Physical Description

Size		218 L mm x 190 W mm x 65 H mm
Weight	SMART7	<1 kilograms
NovAtel Part Number	SMART7	

See the following sections for more information about the SMART7:

- *SMART7 Performance Specifications* on the next page
- *SMART7 Mechanical Specifications* on page 29
- *SMART7 Environmental and Electrical Specifications* on page 30
- *SMART7 Data Communication Specifications* on page 31
- OEM7700 Strobe Specifications

For information about the cable available for the SMART7, see the following:

- *SMART7 Interface Cable* on page 33

Preliminary 3

A.1 SMART7 Performance Specifications

All specifications subject to GNSS system characteristics.

These specifications apply to the SMART7 and SMART7-SPAN.

Table 8: SMART7 Receiver Performance

			RMS	95%
Horizontal Position Accuracy[1]	Single Point	L1 only	1.5 m	2.4 m
		L1/L2	1.2 m	2.0 m
	NovAtel CORRECT	SBAS[2]	0.4 m	0.6 m
		DGPS	0.4 m	0.8 m
		PPP TerraStar-L[3] TerraStar-C TerraStar-C PRO[3]	40 cm 4 cm 4 cm	50 cm 5 cm 5 cm
		RTK	1 cm + 1 ppm	2.5 cm + 2 ppm
Pass to Pass Accuracy[2]			**RMS**	**95%**
	Single Point[4]	L1 GLIDE	≤34.5 cm	≤86 cm
		L1/L2 GLIDE	≤21 cm	≤35 cm
	SBAS[4]	L1 GLIDE	≤19 cm	≤45 cm
		L1/L2 GLIDE	≤15 cm	≤20 cm

[1]Typical values. Performance specifications in open sky conditions and are subject to GPS system characteristics, US DOD operational degradation, ionospheric and tropospheric conditions, satellite geometry, baseline length, multipath effects and the presence of intentional or unintentional interference sources.

[2]GPS only.

[3]TerraStar subscriptions are available from NovAtel or TerraStar.

[4]Pass-to-pass accuracy over a period of 900 seconds when using GLIDE. GLIDE is a relative positioning filter specifically designed for use in open sky pass to pass applications. Absolute accuracy is not guaranteed.

Preliminary 3

	NovAtel CORRECT[3]	TerraStar-L	≤10 cm	≤15 cm
		TerraStar-C	≤1.5 cm	≤3.0 cm
		TerraStar-C PRO	≤1.5 cm	≤3.0 cm
		RTK	1 cm + 1 ppm	2.5 cm + 2 ppm
Measurement Precision (RMS)$_2$		**GPS**	**GLONASS**	
	L1 C/A codes	4 cm	15 cm	
	L1 carrier phase	0.5 mm	1.5 mm	
	L2 P(y) code[1]	8 cm	8 cm	
	L2 carrier phase[5]	1.0 mm	1.5 mm	
	L2C code[2]	8 cm	8 cm	
	L2C carrier phase[6]	1.0 mm	1.5 mm	
Channel Configuration	555 Channels			
Signals Tracked	GPS	L1, L2, L2C		
	GPS (optional)	L5		
	GLONASS	L1, L2		
	GLONASS (optional)	L1 CDMA, L2 CDMA		
	BeiDou (optional)	B1, B2		
	Galileo (optional)	E1, E5 AltBOC, E5a, E5b		
	NavIC (IRNSS)			
	SBAS	L1		
	QZSS	L1, L2		
	L-Band	Up to 5 channels[3]		

[1]L2 P for GLONASS
[2]L2 C/A for GLONASS.
[3]Currently the receiver can track up to 3 L-Band channels.

Preliminary 3

Minimum Satellites Tracked[1]		>44
Minimum Satellite Used in Computing Position[7]		>52
Maximum Data Rate	Measurements Position	up to 20 Hz up to 20 Hz
Time to First Fix	Hot: <20 s typical (Almanac and recent ephemeris saved and approximate position and time entered) Cold: <40 s typical (No almanac or ephemeris and no approximate position or time)	
Signal Reacquisition	L1	0.5 s typical
	L2	<1.0 s typical
Time Accuracy[2]	20 ns RMS	
Velocity Accuracy[3]	<0.03 m/s RMS	

The IMU performance specifications apply to the SMART7 only.

Table 9: SMART7 IMU Performance

Gyroscope Performance	
Input Rate (max)	±150 °/second
Bias Repeatability	0.5 °/second
Bias Instability	3.5 °/hour
Angular Random Walk	0.1 °/√hour
Accelerometer Performance	
Accelerometer Range	±5 g
Bias Repeatability	15 mg
Bias Instability	0.1 mg
Velocity Random Walk	0.05 m/s/√hour

[1]These specifications refer to the processing power of the GNSS receiver. The receiver shall have the processing power to track at least 44 satellites (if visible) and be able to use the observations from 52 satellites to compute the position.
[2]Time accuracy does not include biases due to RF or antenna delay.
[3]Export licensing restricts operation to a maximum of 515 metres per second.

A.2 SMART7 Mechanical Specifications

- *Figure 8: SMART7 Dimensions* below
- *Figure 9: SMART7-SPAN Center of Navigation* below

Figure 8: SMART7 Dimensions

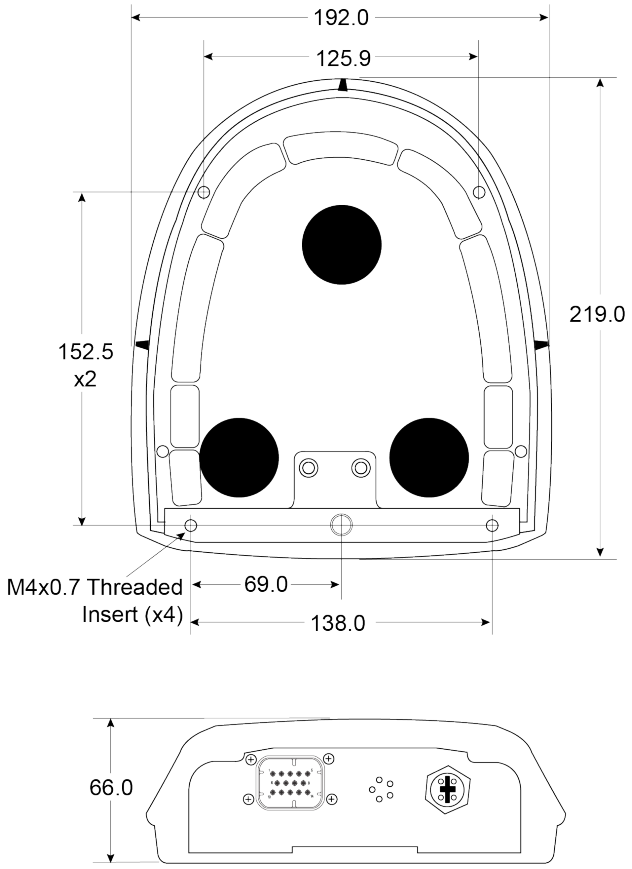

Dimensions are in millimetres.

Figure 9: SMART7-SPAN Center of Navigation

Preliminary 3

A.3 SMART7 Environmental and Electrical Specifications

Table 10: SMART7 Environmental Specifications

Operating Temperature	-40°C to +70°C
Storage Temperature	-45°C to +80°C
Humidity	MIL-STD-810G(CH1), Method 507.6
Immersion	MIL-STD-810G(CH1), Method 512.6
Ingress Protection Rating	IP67
Shock	MIL-STD-810G(CH1), Method 516.7
Solar Radiation	EN60950-22 8.2, ISO 9022-9, Method 20, Severity Degree 03
Salt Fog	IEC 60068-2-11
Sand and Dust	MIL-STD-810G(CH1), Method 507.6
Random Vibration	MIL-STD-810G(CH1), Method 514.7
Sinusoidal Vibration	IEC 60068-2-6, Test Fc

Table 11: SMART7 Power Requirements

Voltage	+7 to +30 VDC
Power Consumption	4 W typical, value for GPS L1/L2 These are typical values using serial ports without interference mitigation. These values can change with the number of satellites in view, firmware version, data logging rates and features in use. Use them as a guide for what you might expect but not as absolute values

Preliminary 3

A.4 SMART7 Data Communication Specifications

Table 12: Data Communications Interfaces

COM1, COM2, COM3	
Electrical format	RS-232
Data rates[1]	2400, 4800, 9600 (default), 19200, 38400, 57600, 115200, 230400 bit/s
Signals supported	COM1_Tx, COM1_Rx, COM2_Tx, COM2_Rx, COM3_Tx, COM3_Rx
SMART7 port	14-Pin Tyco Ampseal
CAN Bus	
Electrical Format	ISO 11898-2
Data rates	1 Mbps maximum. CAN Bus throughput is determined by slowest device on the bus
SMART7 port	14-Pin Tyco Ampseal
ETHERNET	
Physical layer	10BASE-T/100BASE-TX
SMART7 port	M12 D-code male
Wi-Fi Access Point	
Security	WPA2
Encryption	AES
Wi-Fi Client Point	
Security	
Encryption	

A.5 SMART7 Strobe Specifications

All of the SMART7 strobe signals are available on the 14-Pin Interface connector. Pulse Per Second (PPS) strobes provide status and synchronization signal.

Refer to *SMART7 Interface Cable* on page 33 for pin out details.

[1]Data rates higher than 115200 bit/s are not supported by standard PC hardware. Special PC hardware may be required for higher rates, including 230400 bit/s and 460800 bit/s.

Preliminary 3

Table 13: SMART7 Strobes Description

Strobes	Input/Output	Comment
Emulated Radar (ER)	Output	0VDC to VBATT+ (also refer to *SMART7 Interface Cable* on the next page)
PPS	Output	3.3V CMOS A time synchronization output. This is a pulse where the leading edge is synchronized to receiver calculated GNSS Time. The polarity, period and pulse width can be configured using the **PPSCONTROL** command

Preliminary 3

A.6 SMART7 Interface Cable

The SMART7 interface cable is 01019944. This cable provides access to all of the signals available on the SMART7 14 pin Tyco Ampseal connector. The exposed wires (red for positive and black for negative) can then be connected to a vehicular power circuit (or equivalent) protected by a 5 A fast blow fuse (user supplied).

Figure 10: SMART7 Interface Cable

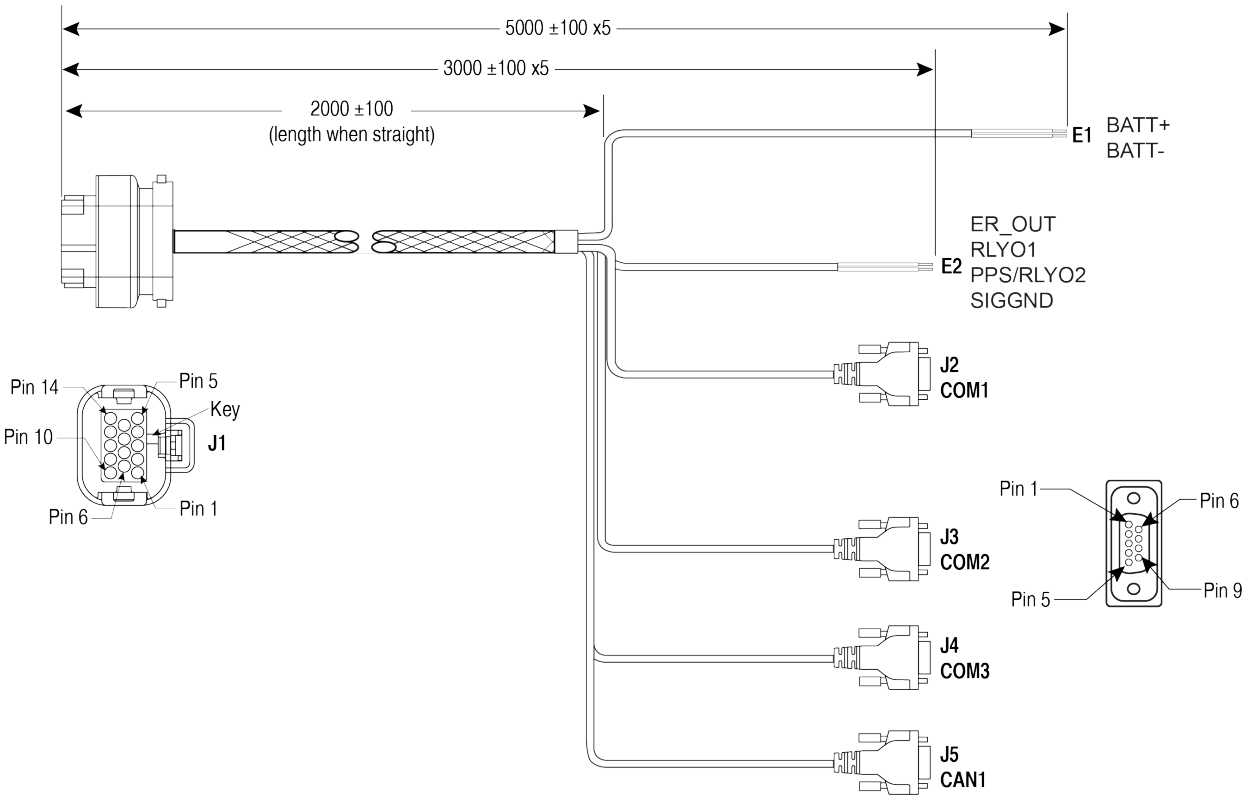

Dimensions are in millimeters.

Table 14: SMART7 Connector Pin Out

Signal Name	J1	J2	J3	J4	J5	E1	E2
COM1-TXD	1	2					
COM1-RXD	2	3					
COM2-TXD	3		2				
COM2-RXD	4		3				

Preliminary 3

Signal Name	J1	J2	J3	J4	J5	E1	E2
COM3-TXD	8			2			
COM3-RXD	13			3			
CAN1+	6				7		
CAN1-	7				2		
SIGGND	5	5					
SIGGND	5		5				
SIGGND	5			5			
SIGGND	5				3		
SIGGND	5						Flying Lead
EMD RADAR OUT	10						Flying Lead
RLYO1	11						Flying Lead
PPS/RLYO2	12						Flying Lead
PWR RET (GND)	9					Flying Lead	
PWR INPUT	14					Flying Lead	

Table 15: 14-Pin Interface Connector

CAN	SAE J1939/ ISO 11783/ ISO 11898 Compatible
PPS Output	3.3 V CMOS Logic Compatible
Emulated Radar Output	High= Supply Voltage Maximum Low= 1.5 V Maximum Load= 3K Ohm Minimum

Also refer to OEM7700 Strobe Specifications.

Preliminary 3

A.7 SMART7 Mounting Plate Specifications

The optimal screw penetration into the SMART7 mounting holes is 6 mm (±1 mm) deep. When selecting screws for mounting the SMART7, ensure the screw penetration does not exceed this specification. Using excessively long screws can damage the SMART7 enclosure.

Figure 11: SMART7 Mounting Plate Dimensions (Optional)

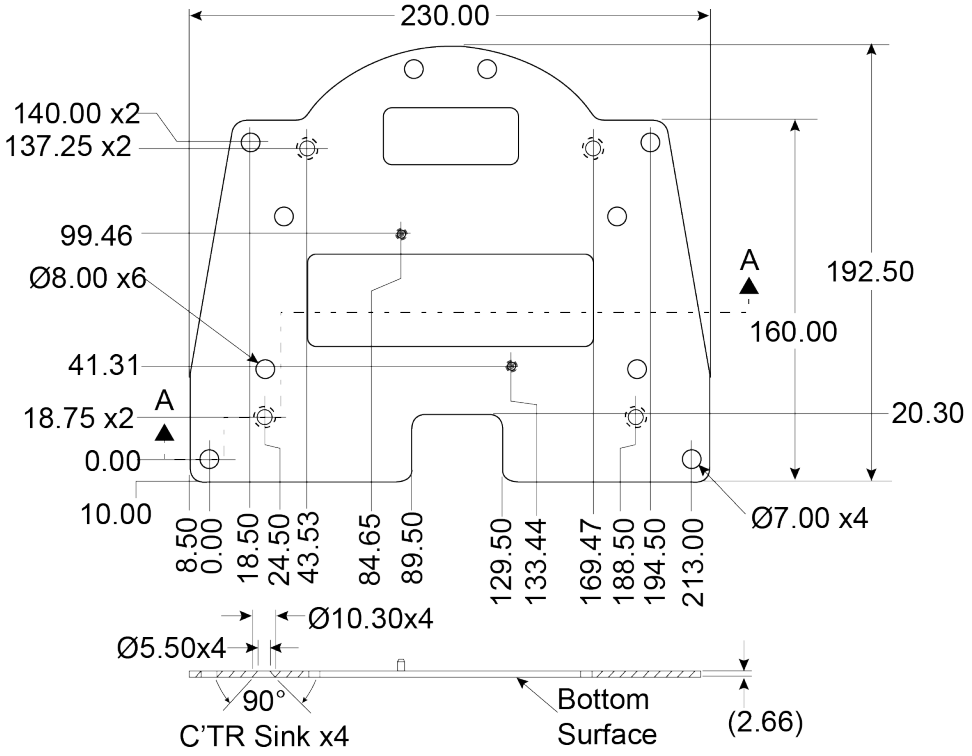

Refer to *Mounting and Orienting the SMART7* on page 19 for installation details.

Preliminary 3