FC-302 Data Radio

User Manual

Address: 6/F,17 Building, Guangqian Industrial Park, Longzhu Road, Xili Town, Nanshan Shenzhen, China
Tel: +86-755-86026600 +86-755-23230518
Fax: +86-755-86026300
E-mail: support@friendcom.com
Website: http://www.friendcom.cn

SHENZHEN FRIENDCOM TECHNOLOGY DEVELOPMENT CO.,LTD

Content

1 Product Description....2
2 Technical Specifications....3
3 Interfaces of the Radio....4
3.1 Interface for Voice Transmission....6
3.2 Interface for data transmission....7
3.3 Modem Option for Data Communication....7
4 Application Instruction....8
4.1 Hardware Installation....8
4.2 Operation Instruction....10
5 Maintenance and Repair....18
5.1 Dimensions....18
5.2 Removing & Replacing the Upper Cover....19
5.3 Removing & Replacing the Power Board & Modem Board & Shield Plate....19
5.4 Removing & Replacing the Main Board....20
5.5 Repairable/Replaceable Parts List....21
6 Accessories Available....22
Appendix:....23

1 Product Description

FC-302 is a synthesized 5-watt FM transceiver module, which is designed for data transportation and voice communication. For the voice communication, it can support selected pre-emphasis, squelch and audio amplifier. The radio is PLL(Phase Lock Loop Synthesizer) /microprocessor controlled with optional GMSK modem.
The application of two-point modulation with good low-frequency response in the radio also makes it a competitive choice for 9600bps rate data application. Compact dimension and wide range DC support make it flexible to use.

Features:

• CE, FCC& AS/NZS 4295: 2004 certified
• Programmable 16 channels with Dip-Switch
• Configurable power save feature
• Optional external channel configuration
• FM&GMSK modem option
• CTCSS/DCS
• Fast start-up time: 5ms
• SQ programmable via PC
• Pocsag Modulation
• PC programmable & Software tune & Calibration

Applications:

- Industrial telemetry & wireless remote control
- Gas and oil flow monitoring
- Electricity, water and gas utilities
- Earthquake, weather, environmental protection and urban lighting control
- Vehicle tracking and asset tracking systems
- Water monitoring, waste water management and irrigation control
- Railway, police, army automation system
- Aerial defense and fire alarm system
- Wireless Paging system

2 Technical Specifications

General Specification		
Working Frequency		450MHz～490MHz
Channel Spacing		6.25KHz/12.5KHz Programmable
Modulation Type		FM, GMSK
Number of Channels		16
Nominal Working Voltage		12V DC
Extreme Working Voltage		9.5 V～16V DC
Storage Temperature		-40℃～+80℃
Operating Temperature		-30℃～+65℃
Current Consumption	Standby	＜100mA
	Transmit 5 watts RF Power	＜1.5A
	Transmit 1 watt RF Power	＜1A
TX to RX Attack Time		＜5ms
RX to TX attack time		＜5ms
Frequency Error		＜2.5ppm
Antenna Connector		BNC 50Ω
External interface		DB15(optional male interface)

Transmitter Specification		
RF Power	6.25KHz Channel Spacing	1W/2W Programmable
	12.5KHz Channel Spacing	1W/2W/3W/4W/5W Programmable
Frequency Deviation	6.25KHz Channel Spacing	＜1.25KHz
	12.5KHz Channel Spacing	＜2.5KHz
	Subsonic	0.5KHz
Adjacent Channel Power	6.25KHz Channel Spacing	＜-60dBc
	12.5KHz Channel Spacing	＜-70dBc
Conducted Spurious Emission		＜1GHz,＜-36dBm ＞1GHz,＜-30dBm
Modulation Sensitivity	Voice	8~15mV
	Data	80~130mV
TX SNR	6.25KHz Channel Spacing	＞30dB
	12.5KHz Channel Spacing	＞40dB

Receiver Specification		
RX Sensitivity (12dB SINAD)		＜-119dBm　Extreme＜-115dBm
ACS		＞70dB
Image Rejection		＞70dB
IF Rejection		＞70dB
Spurious Rejection		＞70dB
Intermodulation Suppression		＞65dB
Conducted Spurious Emission		＜-57dBm
Receiving Audio Distortion		＜5%
RX SNR	6.25KHz Channel Spacing	＞30dB
	12.5KHz Channel Spacing	＞40dB
Audio Output Power		0.5W @ 8Ωload

3 Interfaces of the Radio

DB-15 are our basic interfaces of FC-302 radio.

DB15 have two kinds of Pin definition, standard interface and data transmission interface. We provide three kinds of interfaces for each requirement in all.

Standard DB15 interface

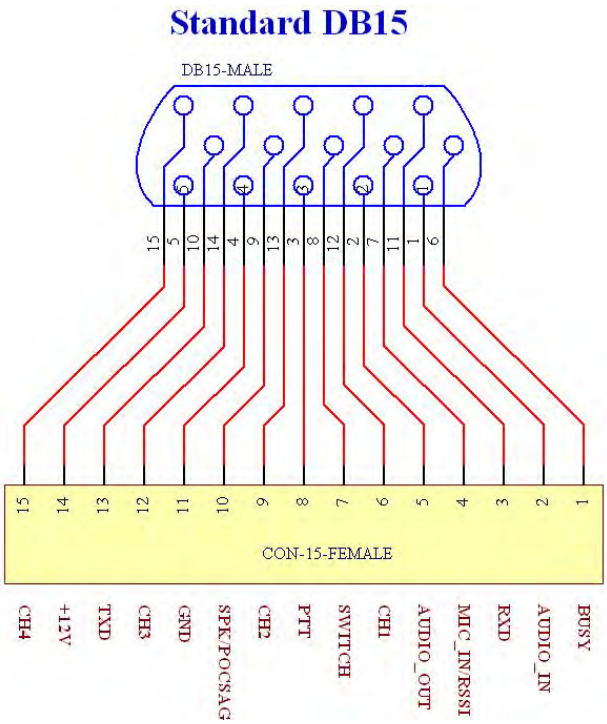

Data transmission DB15 interface

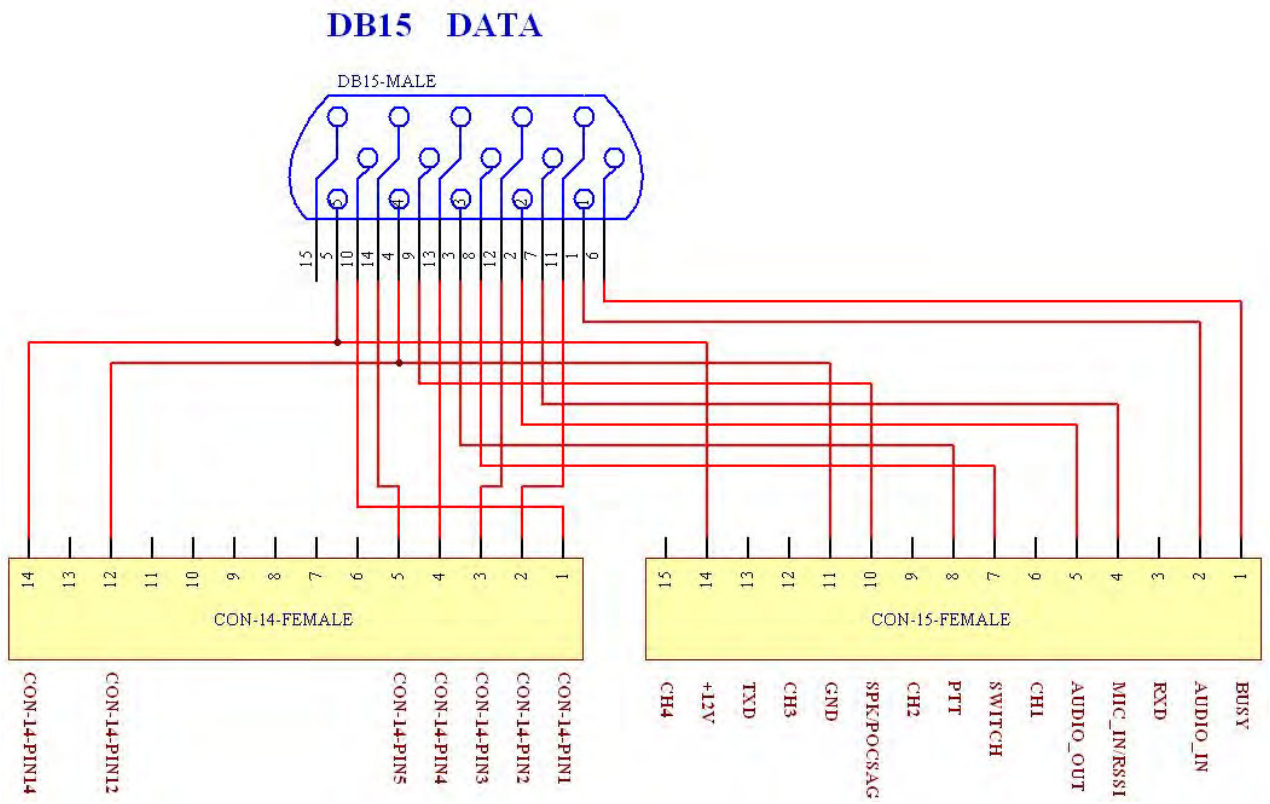

As shown in above picture, the pin definition of CON-14-FEMALE is related with internal devices (Modem board or Bridge board). Refer to Table 1.

Table 1

	Internal bridge	**Internal modem**	
CON-14-PIN1	TFSK	GND	
CON-14-PIN2	RXD(RADIO)	RXD(MODEM)	
CON-14-PIN3	EXT_PTT	EXT_PTT	
CON-14-PIN4	TXD(RADIO)	TXD(MODEM)	
CON-14-PIN5	RFSK	CD_OUT	
CON-14-PIN12	GND	GND	
CON-14-PIN14	NC	+12V（B+/9.6～16V DC）	

3.1 Interface for Voice Transmission

Standard DB15 is only used for voice transmission.
Pin 10～Pin15 on DB15 is used for extending the optional function of the channel meanwhile bring out the hardware serial port. The pin definition is shown in Table 2.

Table 2

Pin Name	Pin No. on DB15	Description	Remark
AUDIO_IN (MOD IN)	1	Audio input. 3Khz LPF; Modulation sensitivity is 100mW	AUDIO_IN is effective only when PIN 7(MIC) is vacant or with +5V high level. 3KHz LPF filter existed in audio channel.
AUDIO_OUT (AF OUT)	2	Audio output; 3Khz LPF; Output level at 60% frequency deviation is 100±30mV. This line has an internal pull-up resistor to +5V.	
PTT	3	TX control， active low, only when PTT is active AUDIO_IN and MIC IN are effective. This line has an internal pull-up to 5V.	
GND	4	Ground	
B+(9.6～16V DC)	5	Positive pole input from DC power; +12V	
BUSY	6	Logical level output to indicated whether a carrier or not. Low lever = carrier , high level=no carrier. This line has a pull-up to +5V.	Also able to work as simulated serial and data transmission port.
MIC IN	7	Microphones input.	Can directly connect to electrets MIC, the DC voltage of this pin should lower than 3.5V, then MIC transmission can be activated.
SWITCH	8	Control output, 5V high level output when active	Also able to work as simulated serial and data transmission port.
SPK	9	Audio output from the audio amplifier, @ 8Ω	SPK is effective when Pin 7 connect to MIC or GND,（MIC PIN power than 3.5V
TXD （Radio）	10	The serial data is output from this pin, used for radio parameter setting，5V TTL	Data is output from radio.
RXD （Radio）	11	The serial data is input to this pin, used for radio parameter setting，5V TTL	Data is input into radio
CH1	12	Select channel by Dip switch; the low bit of 4-bit binary code.	Available when channel control mode is programmed as “by Dip switch”
CH2	13	Select channel by Dip switch; the second bit of 4-bit binary code.	
CH3	14	Select channel by Dip switch; the third bit of 4-bit binary code.	
CH4	15	Select channel by Dip switch; the forth bit of 4-bit binary code.	

3.2 Interface for data transmission

As to FC-302 with internal modem, the pin definition is shown in Table 3.

Table 3

Pin Name	Pin No.	Decription	Remark
AUDIO_IN（MOD IN）	1	Audio input. 3Khz LPF, Modulation sensitivity is 100mW	AUDIO_IN is effective only when PIN 7(MIC) is vacant or with +5V high level. 3KHz LPF filter existed in audio channel.
AUDIO_OUT（AF OUT）	2	Audio output, 3Khz LPF. Output level at 60% frequency deviation is 100±30mV. This line has an internal pull-up resistor to +5V.	
PTT	3	TX control，active low, only when PTT is active AUDIO_IN and MIC IN are effective. This line has an internal pull-up to 5V.	
GND	4	Ground	
B+(9.6～16V DC)	5	Positive pole input from DC power; nominal +12V	
BUSY	6	Logical level output to indicated whether there is a carrier or not. Low lever = carrier , high level=no carrier. This line has a pull-up to +5V.	Also able to work as simulated serial and data transmission port.
MIC IN	7	Microphones input.	Can directly connect to electrets MIC, the DC voltage of this pin should lower than 3.5V, then MIC transmission can be activated.
SWITCH	8	Control output; 5V high level output when active	Also able to work as simulated serial and data transmission port.
SPK	9	Audio output from the audio amplifier, @ 8Ω	AUDIO_IN is effective only when PIN 7(MIC) is vacant or with +5V high level. 3KHz LPF filter existed in audio channel.
GND	10	Power ground for modem	
RXD（Modem）	11	The serial data is input to modem through this pin. Default is RS232.	The hardware is one of RS232, RS485 or TTL/5V when delivery.
EX_PTT	12	Data transmision control. Actice at low level	EX_PTT is valid with installed modems below: FC-302-GMSK,
TXD（Modem）	13	Serial data is output from modem via this pin. Default is RS232.	The hardware is one of RS232, RS485 or TTL/5V when delivery.
CD_OUT	14	Logical level output to indicated whether a carrier or not. Low lever = carrier , high level=no carrier.	Note: do not change the level to low unless the internal modem needs.
NC	15		

3.3 Modem Option for Data Communication

GMSK high speed modem are applied to the FC-302 data radio to increase capability for data application. The goal of an internal modem is to improve the efficiency for data transmission and provide maximum flexibility for user application.

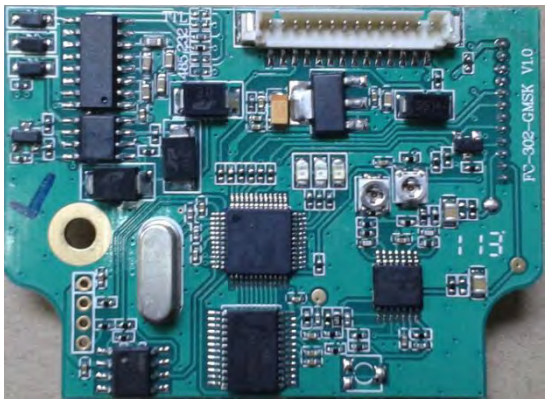

FC-302-GMSK modem

3.3.1 Modem specifications

Items	GMSK	Remark
Power supply	DC 12V	
Serial data rate (bps)	9600	
Symbol Frequency KHz	4800	Symbol frequency is 2400 when the data rate is 9600bps
Air data rate (bps)	9600	
Serial port updating	Y	
Interaction with radio mainboard	Y	Program the radio's parameters by modem via AT command
AT command	Y	Refer to the Appendix
Interface level	Y	Hardware jumper resistor, support RS485/RS232/TTL, Factory default is RS232

4 Application Instruction

Functions of PC(Personal Computer) software, hereafter called "FC-302 QuickSet v0.1.12 ", will be illustrated. Main goal of this instruction is to save time for user by supporting exact usage of the software, at the same time, give a help to user who wants to utilize the radio for another applications. This programming software enables the various parameters of FC-302 to be read, modified, programmed and printed.

4.1 Hardware Installation

To apply PC software to radio application, FC-302 QuickSet En v0.1.12, programming cable, programming kit and PC are needed. In this chapter, instruction for connection of the equipment will be illustrated.

4.1.1 System Requirements

Computer

Normal personal computer or faster (recommended)

Operating System

Microsoft Windows XP & Windows 7

Communication Port

One available communication port (COM1, 2, 3 or others)

Hardware Accessories

Programming cable(RS232 to USB)

Programming kit

4.1.2 Connecting to Data Radio

Connection between the PC and the radio for parameter setting

The programming kit is used for connection as shown below.

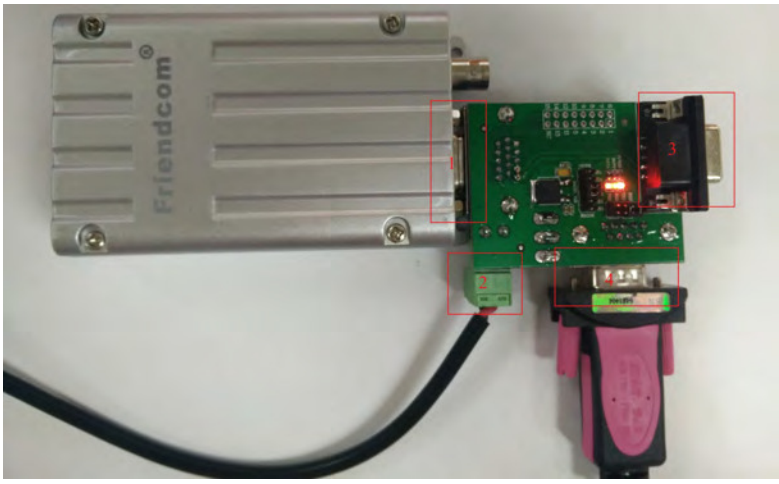

No.	Descriptions
1	DB15 connector, Connected radio with the programming kit
2	Power Supply (DC 12V)
3	RS232 Interface, Connected to PC via RS232 serial cable or RS232 to USB cable

The position of the jumper:

For radio's parameter setting, user should put the jumper on the position shown as below.

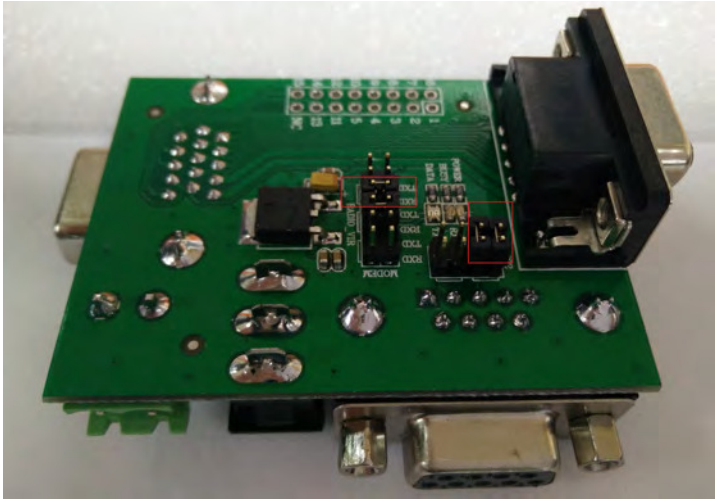

For data transmission test with GMSK modem, the jumper's position need to be changed shown as below.

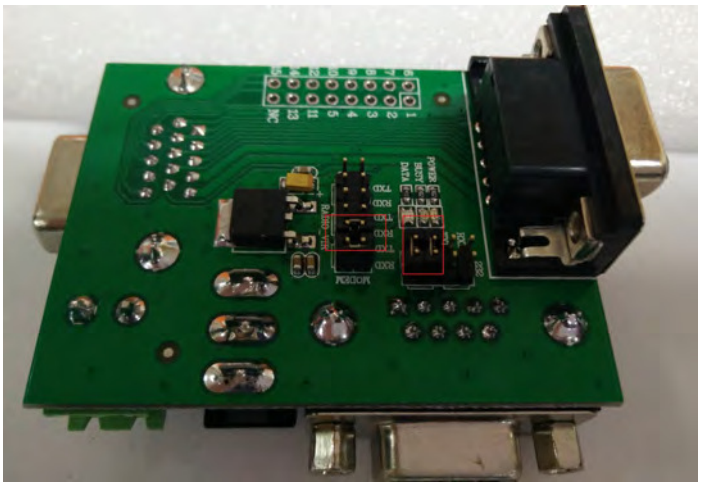

4.2 Operation Instruction

Detailed instruction for channel and system configuration is described. Especially, in input channel data, data input method for Rx,Tx frequency, Rx,Tx option such as CTCSS, DCS, scan and bandwidth is explained specifically. In addition, system option such as selection of squelch type, data value setting for power saving mode, Tx time out time, scan option and modem speed is detailed.

4.2.1 Overall View

Pin 6 (BUSY) and Pin 8 (Switch) of DB15 connector work as TX end and RX end of simulated serial port for data transmission in the first 2 minutes after the radio power on. The CON port is with characteristics of 9600bps, 8N1, TTL. If no valid command is sent from PC, the port will be disabled from serial simulation function and return to normal BUSY and Switch function.

Initially, click on the shortcut of PC software and then the following window shows up.

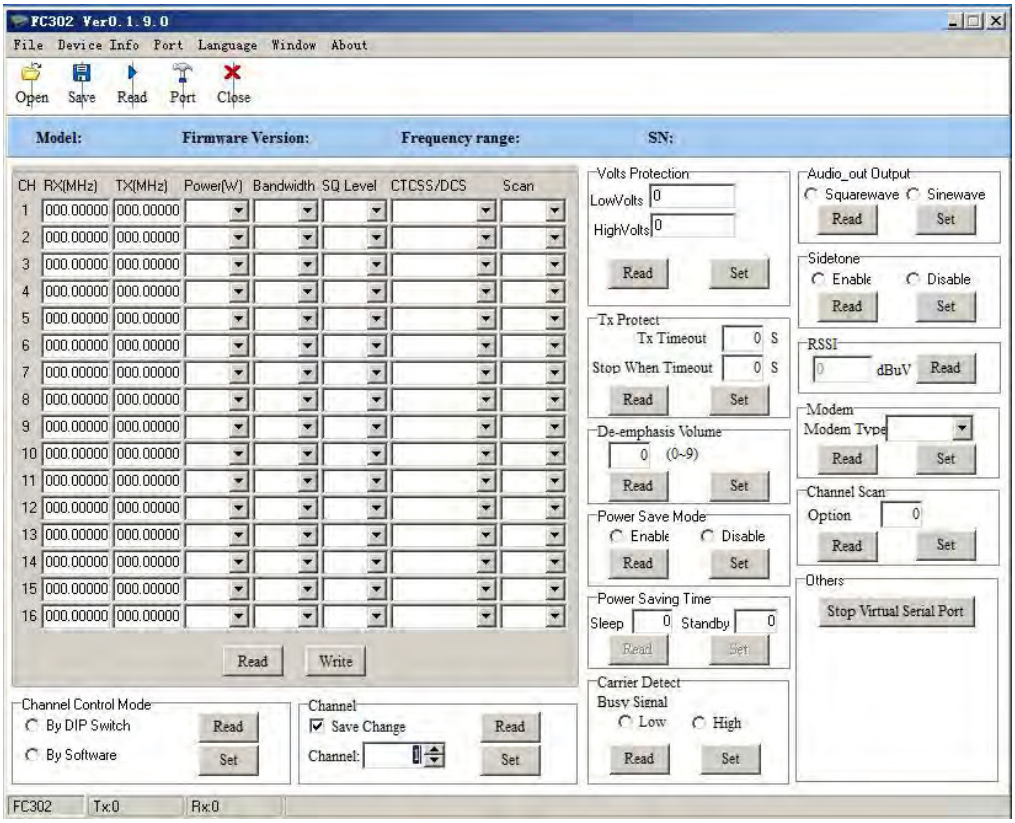

First of all , open the con port. The CON port is with characteristics of 9600bps, 8N1 and click “Open” as picture shows.

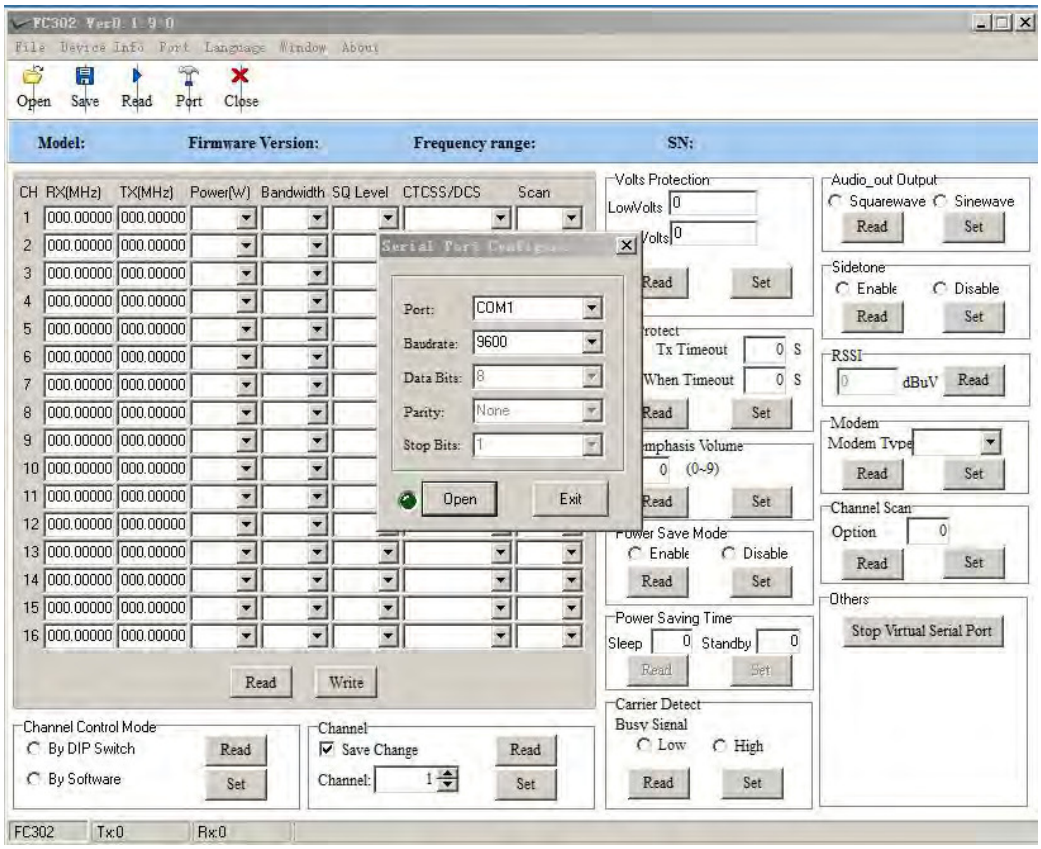

If user puts mouse cursor on the each icon in tool bar for a second, message for function indication is displayed.

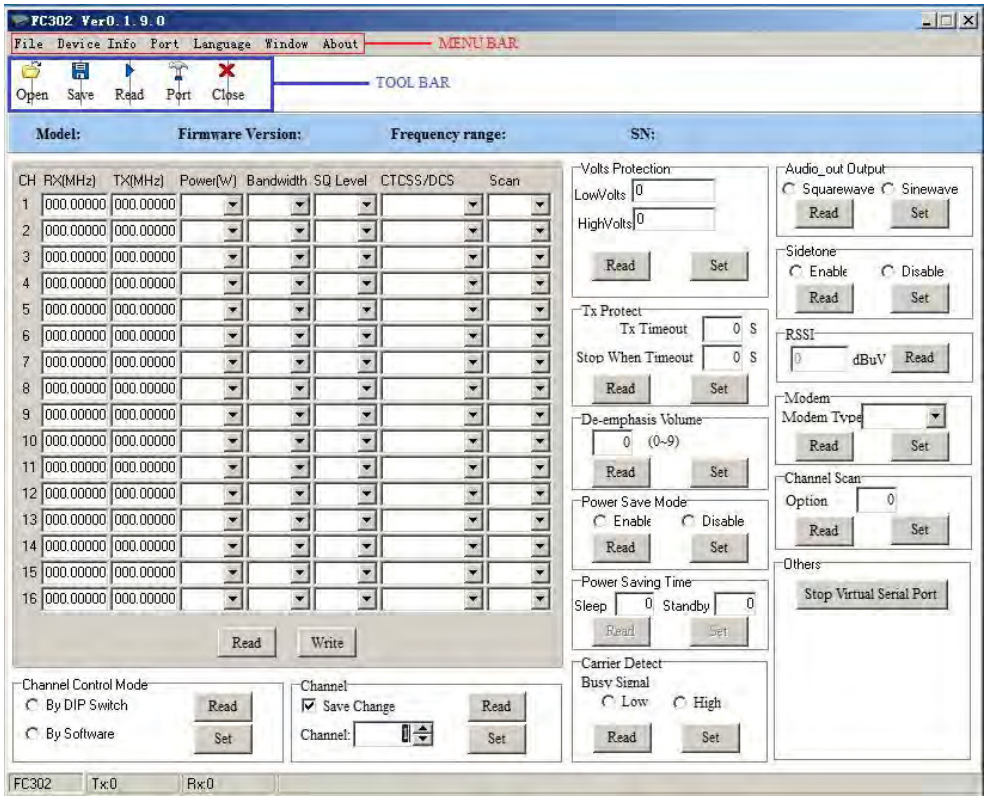

Power on the radio, after 5 seconds, click on the "Read", establish the communication with PC and radio. As the following picture:

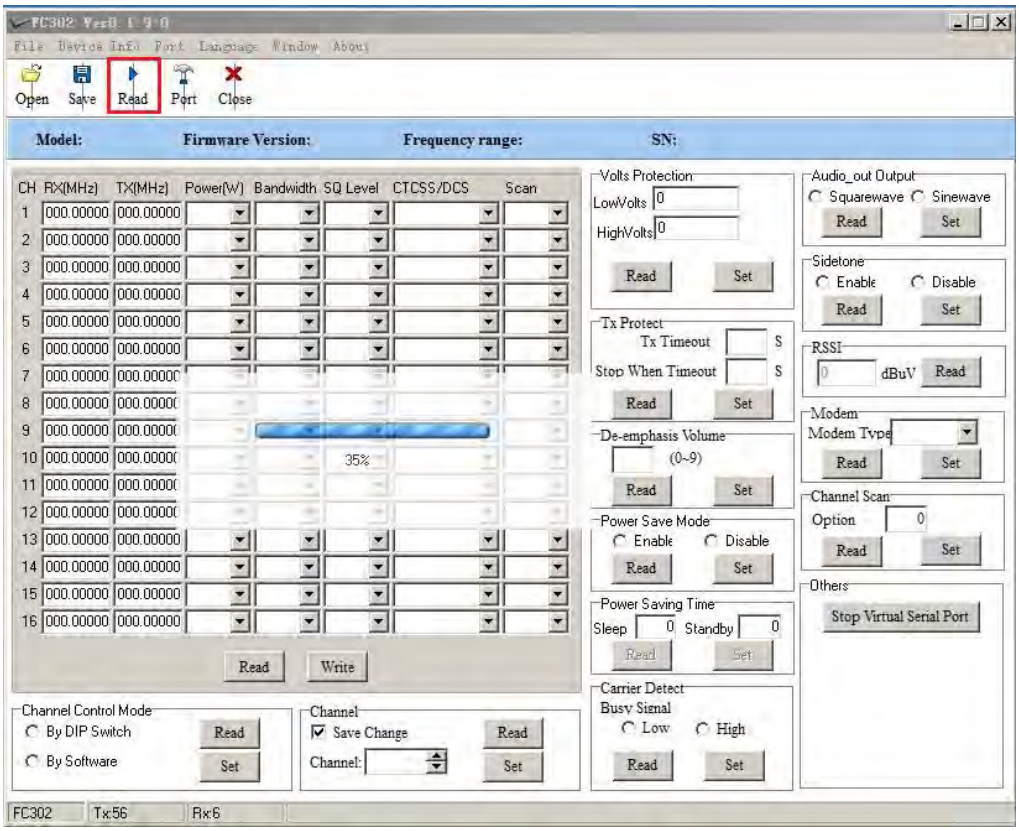

Warning: 1. If there is no read or write operations in first 30 seconds after the radio is powered up or

within 120 seconds after last operation, user should restart the radio for setting.

2. The BUSY signal, SWITCH and CTCSS/DCS will only be available after 2 minutes when user finish programming setting

4.2.2 Input Channel Data

In this option part, user can input channel selection from 1 to 16, Rx,Tx frequency, Rx,Tx tone option such as CTCSS, DCS, power, switch and make SCAN list, and choose bandwidth, Narrow or Wide according to each channel.

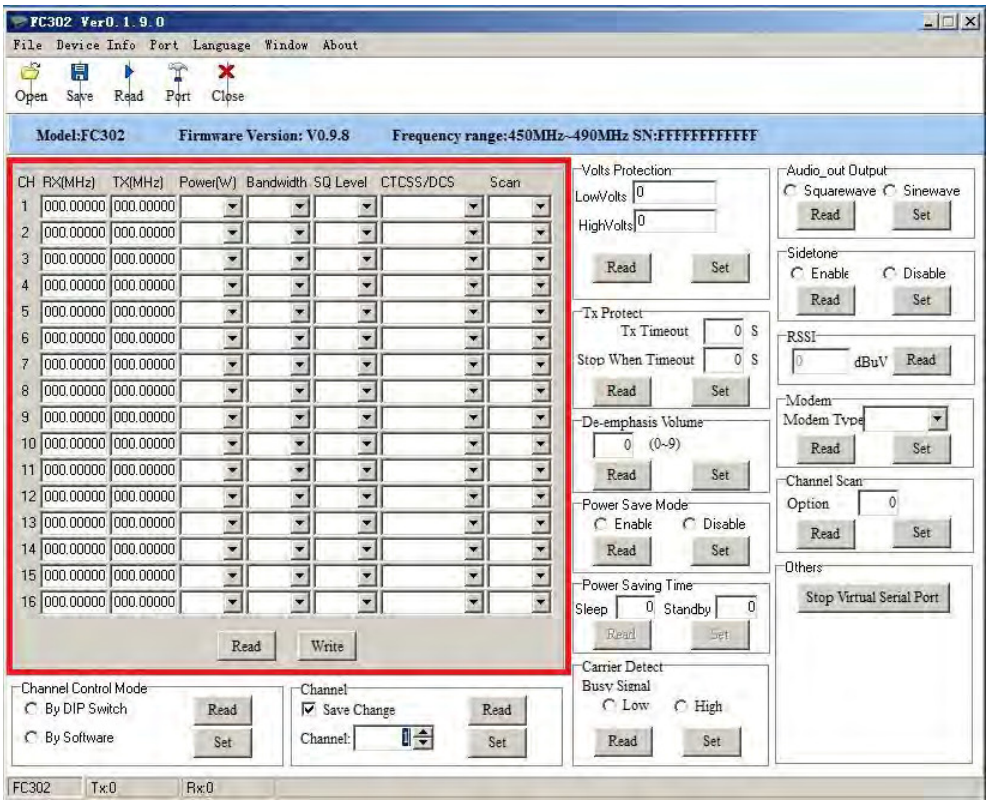

Fig. 4 Feature Column

Double-click on the any window inside red-rectangle area to set Rx,Tx frequency, Rx, Tx option for each channel.

4.2.2.1 Power

1-5 output power can be programmable for each channel.

4.2.2.2 Bandwidth

User can decide the channel spacing in this feature with optional 6.25KHz (Narrow) or 12.5KHz (Wide) channel spacing.

4.2.2.3 SQ level

Five SQ levels can be select in our radio.
Level 0 is for fully open mute.
The audio signal will continuously transmit. Other levels with corresponding strength are shown as below:

L1: 0.15uV

L2: 0.25uV

L3: 0.35uV

L4: 0.45uV

L5: 0.55uV

4.2.2.4 CTCSS/DCS and Switch

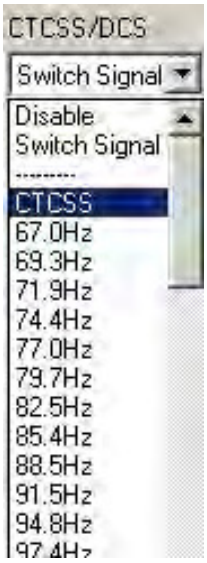

CTCSS/DCS

User can encode tones with CTCSS/DCS according to options shown in the picture. The feature is not available for high speed data transmission.

Switch

When we use radio remote: the Switch function can be use to change a logic from +5V to 0V minimum.
The judging condition is long period of 260Hz, sine wave 300 Ms.

4.2.2.5 Scan

This feature allow user to decide scan mode and establish channel scan list. Radio will start to detect channels and stay on each channel for at least 100ms according to the established scan sequence. If a signal or conversation is detected on any channels in scan list, the radio will stop on that channel and you will monitor the signal or hear the conversation. When the signal or conversation is disappeared, the radio continues to scan.

4.2.3 System Configuration

4.2.3.1 Channel Control Mode

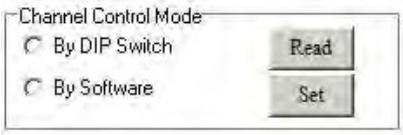

Radio's channel can be selected by inner Dip(4) switch(HW) or serial command inputted from our PC software(SW). Only in SW control mode, channel can be selected in "Channel" column.

4.4.3.2 Working Channel

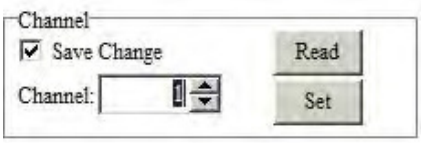

In this column, user select current channel for working.

4.2.3.3 Second Column Features

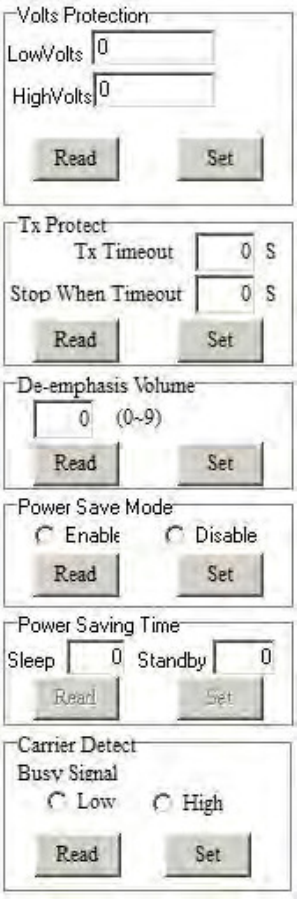

4.2.3.3.1 Volts Protection

If the power supply of the radio is lower than low volts, the radio will stop working and only monitor the power supply. Once the power supply become higher than High volts, the radio can start to work again. The recommended Low volt is lower than 9V. The recommend High volt is 13.8V.

4.2.3.3.2 TX Protection

This feature, when enabled, limit the amount of time that user can continuously transmit. The time can be set from 1 second to 60 seconds. When timeout, radio will release PTT pinout. If user want to transmit again, he or she have to wait delay time (set by “stop when timeout”) after the radio released PTT.

4.2.3.3.3 De-emphasis Volume

FC-302 radio output voice via SPK Pin with 9 levels volume. User is able to select appropriate volume for the connected external speaker in this feature.

4.2.3.3.4 Power Save Mode

Here, you can enable Power save mode or disable. When enabled, radio will automatically switch between Sleep and Standby to lower power consumption. The time of Sleep and Standby can be set in “Power save time”.

However, for supporting fast attack time between TX and RX, the radio will keep in RX mode and the PLL keep working even in power save mode. Only the intermediate frequency circuit is off.

Power Save Time

When Power save is enable, sleep time can be programmed from 20 to 500 ms in 20ms increment with 1~25 optional values. That means 1 equals to 20 ms, 2 equals to 40ms ..... 25 equal to 500ms

Standby time can also be programmed from 40 to 600 ms in 40ms increment with

1~15 optional values. That means 1 equals to 40ms, 2 equals to 80, ... 15 equals to 600ms.

4.2.3.3.5 Carrier Detect Busy Signal

This feature is to set active level of BUSY Pin, high or low. The status is transferred to user for the connection with external devices.

4.2.3.4 Third Column Features

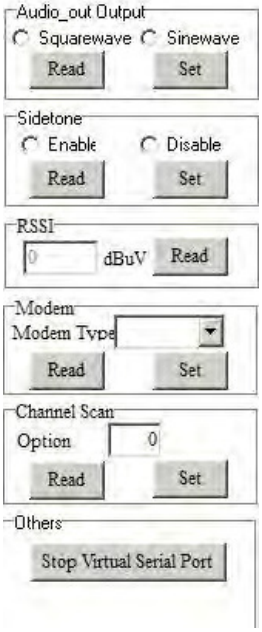

4.2.4.4.1 Audio-out

Output wave for Audio-out can be selected as square wave or sin wave.

4.2.4.4.2. Side Tone

When enabled, user can hear his own voice while transmitting voice. The sidetone volume is fixed at level 2 de-emphasis volume.

4.2.4.4.3 RSSI

To detect the air signal strength over the air；

Unit：dBuv；

4.2.4.4.4 Modem

Modem with different data rate is provided from low speed (1200/2400/4800 bps) to high speed (9600bps).

4.2.4.4.5 Channel Scan

Scan modes are set up in “Option” and shown as below

0 ---------normal scan with carry only

1 ---------normal scan, carry with tone

2 ---------priority scan, carry only

3 ---------priority scan, carry with tone

If normal scan is enabled, radio will scan from initial channel to channel 16 sequentially. If priority scan is enabled, radio will scan the prioritized channel with more times. Prioritized channel is the working channel before the scan. For example, if prioritized channel is CH10 and initial channel is CH8, then the scan sequence is CH8, CH10, CH9, CH10, CH10, CH10, CH11, CH10.....CH16, CH10.

4.2.4.4.6 Others

As mentioned above, the BUSY signal, SWITCH and CTCSS/DCS will only be available after 2 minutes when user finish programming setting. If you click here, user does not need to wait the 2 minutes.

5 Maintenance and Repair

5.1 Dimensions

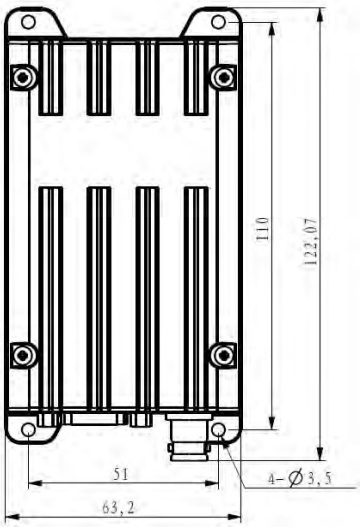

Fig.17 Top View

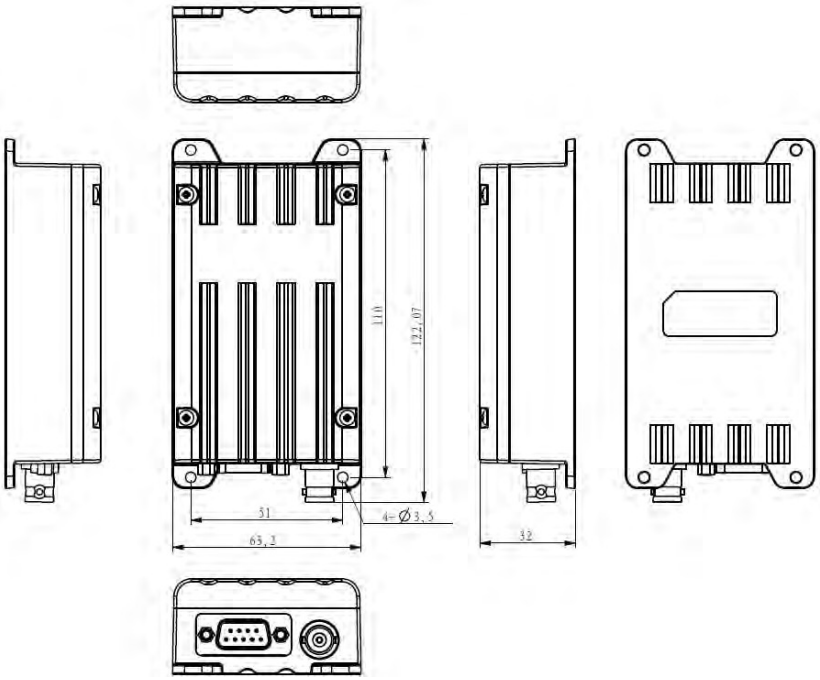

Fig. 18 Exterior View

5.2 **Removing & Replacing the Upper Cover**

Removing the Upper Cover

1. Unscrew the four upper cover mounting screws located on the upper cover of radio

To replace the Upper Cover

1. Reserve the steps taken to remove the Upper Cover.

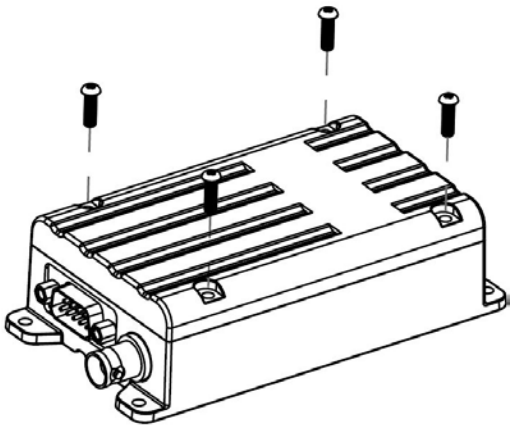

Fig. 19-Upper Cover Removal

5.3 Removing & Replacing the Power Board & Modem Board & Shield Plate

Removing the Power Board & Modem Board Assembly & Shield Plate

1 Removing the Upper Cover (refer to Removing & Replacing the Upper Cover)

2 Disconnect the DB15 pin connector on CON14.

3 Unscrew the 4 monting screws.

4 Remove the Main Board Assembly.

5 Remove the Shield Plate.

To replace the Main board & Power board Assembly:

1. Reserve the steps taken to remove the Main board Assembly & Power board & Shield Plate.

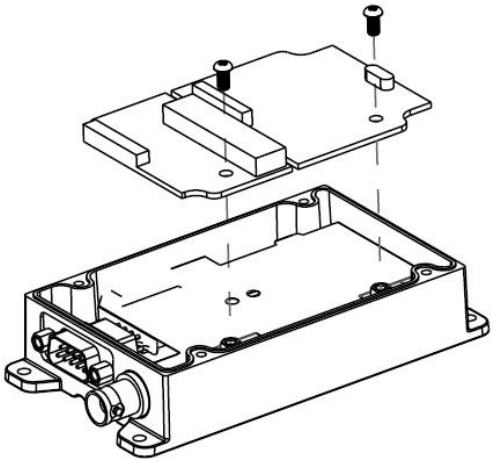

Fig. 20-Power board & Modem board Assembly Removal

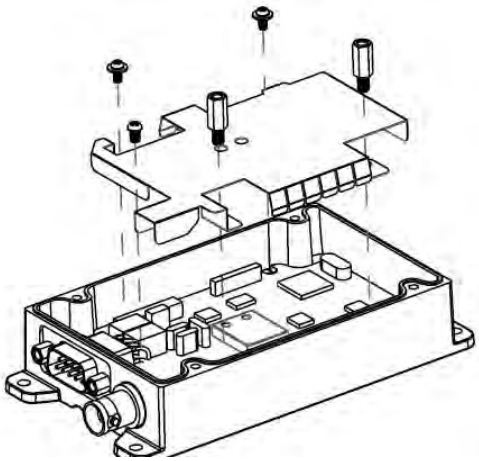

Fig. 21-Shield Plate Assembly Removal

5.4 Removing & Replacing the Main Board

1 Remove the Upper Cover (refer to Removing & Replacing the Upper Cover)

2 Remove the Power board, Modem Board & Shield Plate
(refer to Removing the Power board & Modem Board Assembly & Shield Plate)

3 Unscrew the 4 mounting standoffs.

4 Unsolder the antenna connector cable.

5 Remove the Main Board Assembly.

To replace the Main Board Assembly:

1. Reverse the steps taken to remove the Main Board Assembly.

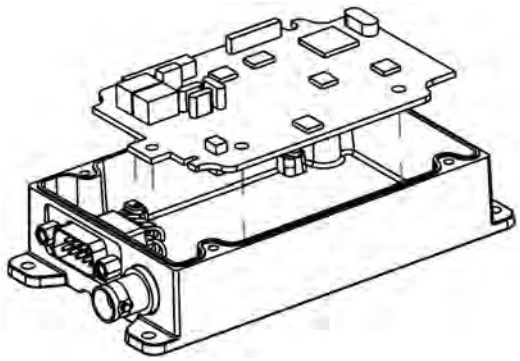

Fig. 21-Main Board Removal

5.5 Repairable/Replaceable Parts List

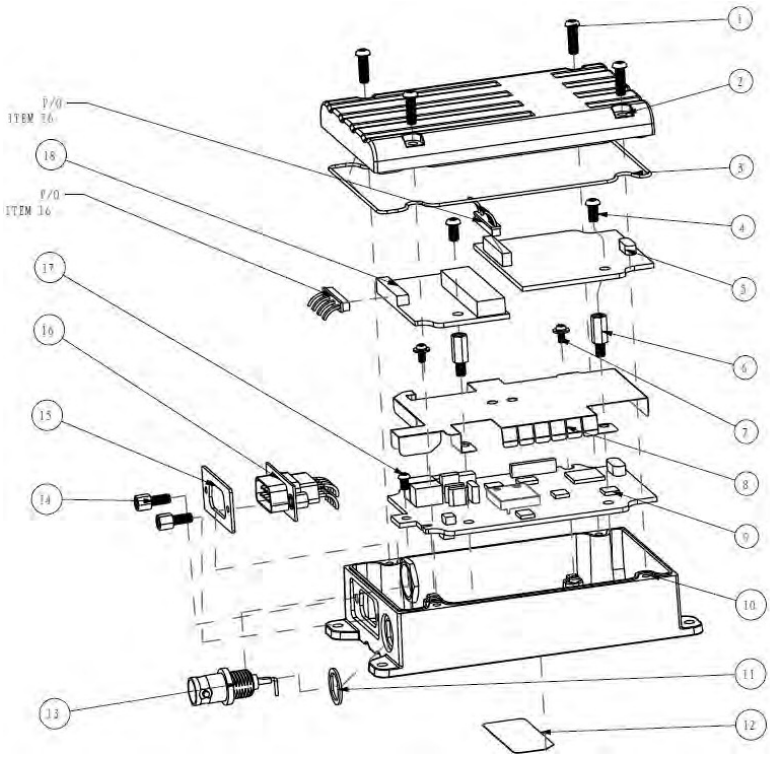

Fig. 22 Exploded View

REPAIRABLE/REPLACEABLE PARTS LIST			
ITEM #	QUANTITY	PART NUMBER	DESCRIPTION
1	4	2.30.0000026600	SCREW,PM3X16
2	1	2.10.0000061300	UPPER COVER
3	1	2.20.0000000058	LID SEALS
4	2	2.30.0000001400	SCREW,PM3X6
5	1	1.50.3021154101	DATA MODEM PCB ASSY
6	2	2.10.0000046000	STANDOFF,HEX,M/F,9.5+6xM3
7	2	2.30.0000006100	SCREW,PWM2X4
8	1	1.95.0000000157	SHIELD PLATE
9	1	1.50.3021354100	MAIN BOARD PCB ASSY
10	1	2.10.0000061400	BOTTOM COVER
11	1	2.20.0000000057	BNC SEALS
12	1	2.40.0000099000	FCC COMPLIANCE LABEL
13	1	1.72.0000000071	BNC CONNECTOR,50 OHM
14	2	2.30.0000026700	JACK SCREW
15	1	2.20.0000000056	DB9 SEALS
16	1	1.74.0000000297	D-SUB 9 CONNECTOR
17	1	2.30.0000006700	SCREW,PM2.5X5
18	1	1.50.3021154100	POWER BOARD PCB ASSY

NOTE:
1.BNC CONNECTOR(ITEM 13) INCLUDES ALL NECESSARY TO MOUNT CONNECTOR

6 Accessories Available

Please contact the Friendcom sales team for accessory information.

sales@friendcom.com

Tel: +86 755 23230544

Appendix:

Modem debugging Instruction

When the GMKS modem is installed with the radio, users need to calibrate the data deviation. The center frequency calibration is only necessary when the modem adopts DC coupling.

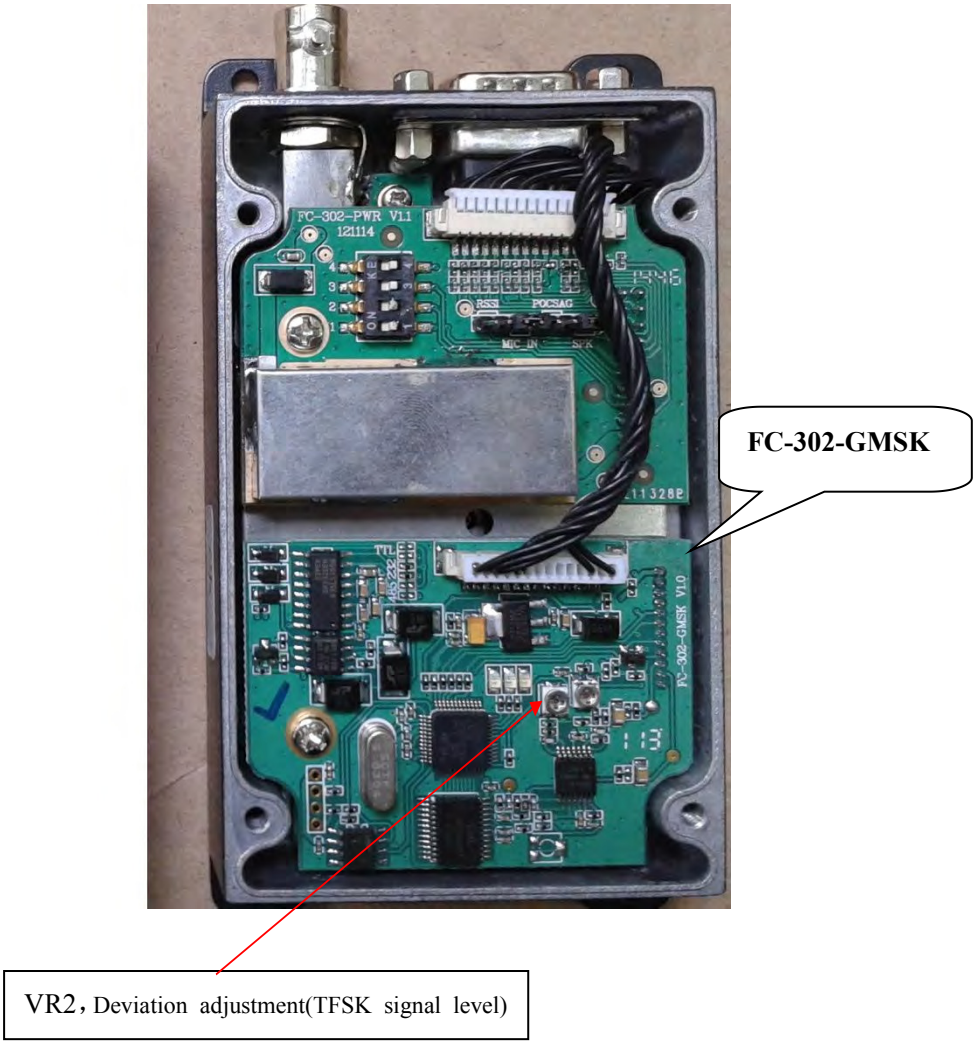

Debug wiring diagram:

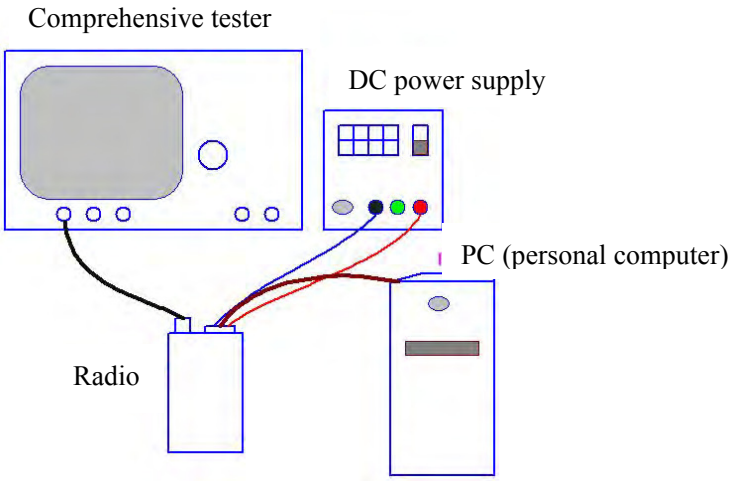

Figure T1: Send the AT command by PC to activate the modem launching 01 code or PN9 code

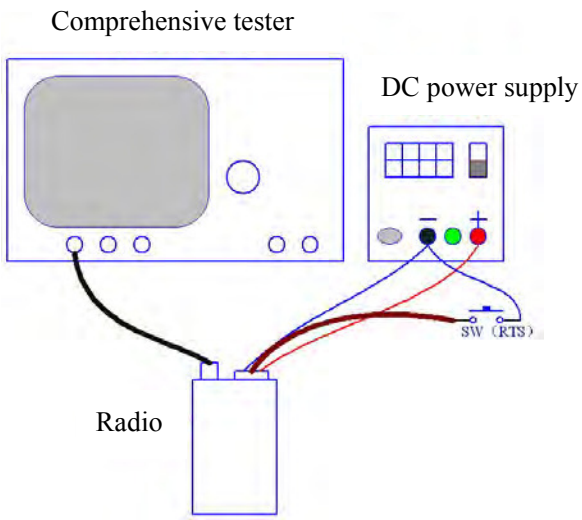

Figure T2: User activate the modem launching 01 code or PN9 code by TRS pin.

Debugging method-1

Connect the devices according to the figure T1 shows. The VFF (Voice Frequency Filter) should be programmed as 20Hz-15KHz. DC power supply provide a voltage of 12V/2A. A serial debugging software sends the AT command to the radio.

Serial port settings：GMSK/9600 modem，9600, 8N1。

AT command	FC-302-GMSK	Remark
AT+TEST=PN9/r	send PN9 code	Used for deviation adjustment of the GMSK modem
AT+TEST=CODE01/r	send code 01	
AT+TEST=EXIT/r	Quit from test	
AT+WORKMODE=?/r	Data rate query	
AT+WORKMODE=M9600/r	-----	

As for GMSK modem, the radio need to be programmed as AC coupling (Low speed mode) and start to send PN code. Then user can adjust the frequency deviation to 3.3-3.5KHz by adjusting VR2 and reading the deviation value on comprehensive test instrument.

Note: user can set the parameters of the radio via modem's external serial port (TXD/RXD) by our PC software(FC-302 QuickSet En v0.1.11.exe)

The debugging is the same with the GMSK modem. But the sending code is 01.

Debugging method-2

The second method is easy to conduct. But the channel and coupling mode. The radio should be under wide band channel spacing for frequency deviation calibration.

Debugging：

Connect the devices according to the figure T2, SW (Switch) is connected between the STS (Pin 12) and GND.

Close the SW in 30 seconds after the radio is powered up. Then the radio starts to transmit. User adjust the frequency deviation to 3.3-3.5KHz by adjusting VR2 and reading the deviation value

Data transmission test

User can test the data transmission performance between two radios by data transmission test tools. The test should be conducted under high-quality signal (under short distance test). The success rate s hould reach 100%

FCC Radiation Exposure Statement:

The equipment compliances with RF exposure guidelines.This equipment should be installed and opreated with minimum distance 100cm between the radiator & your body.The device supports the highest gain of antenna is 5.0dBi.