WSL05-A0 User Manual

Version 1.2.0

Date: 2021-04

Shenzhen Friendcom Technology Co., Ltd.

Additional testing, Part 15 Subpart B disclaimer

1. This device complies with Part 15 of the FCC Rules. Operation is subject to the following two conditions:

(1) This device may not cause harmful interference.

(2) This device must accept any interference received, including interference that may cause undesired operation.

2. Changes or modifications not expressly approved by the party responsible for compliance could void the user's authority to operate the equipment.

NOTE:

This equipment has been tested and found to comply with the limits for a Class B digital device, pursuant to Part 15 of the FCC Rules. These limits are designed to provide reasonable protection against harmful interference in a residential installation.

This equipment generates uses and can radiate radio frequency energy and, if not installed and used in accordance with the instructions, may cause harmful interference to radio communications. However, there is no guarantee that interference will not occur in a particular installation. If this equipment does cause harmful interference to radio or television reception, which can be determined by turning the equipment off and on, the user is encouraged to try to correct the interference by one or more of the following measures:

Reorient or relocate the receiving antenna.

Increase the separation between the equipment and receiver.

Connect the equipment into an outlet on a circuit different from that to which the receiver is connected.

Consult the dealer or an experienced radio/TV technician for help.

Friendcom has always been committed to technological innovation. Our aim is to provide customers with timely and comprehensive service. For any assistance, please contact our Shenzhen headquarters:

FRIENDCOM TECHNOLOGY CO., LTD.

6th Floor, 17 Building, Guangqian Industrial Park, Xili Town, Nanshan District, Shenzhen, 518055, China

Tel: +86-755-86026600 +86-755- 23230320

Fax: +86-755-86026300

For technical support, or to report documentation errors, please visit:

http://www.friendcom.cn

Or email to: sales@friendcom.com

NOTICE

Information in this document has been carefully reviewed and is considered to be accurate. However, Friendcom assumes no liability resulting from any inaccuracies or omissions in this document, or from use of the information obtained herein. Friendcom reserves the right to make changes to any products described herein and reserves the right to revise this document and to make changes from time to time in content hereof with no obligation to notify any person of revisions or changes. Friendcom does not assume any liability arising out of the application or use of any product described herein.

COPYRIGHTS

This manual and Friendcom products described herein may include or describe copyrighted Friendcom material and are considered technical proprietary of Friendcom CO., LTD. Accordingly, any copyrighted material of Friendcom and its licensors contained herein or in Friendcom products described in this manual may not be copied, reproduced, distributed, merged or modified in any manner without the express written permission of Friendcom.

TRADEMARKS

Friendcom and Friendcom logo are registered Trademarks. All other product or service names which are mentioned in this document are the property of their respective owners.

Copyright © Friendcom Communications 2020. All rights reserved.

About This Document

Scope

Scope of this document is to presents features and application of Friendcom WSL05-A0 LoRaWAN series modules.

Audience

This document is intended for system engineers (SEs), development engineers, and test engineers.

Related Documents

Friendcom_WSL05-A0_LoRaWAN_Module_Datasheet
Friendcom_WSL05-A0_AT_Commands_Manual

Conventions

Symbol	Indication
Warning	This warning symbol means danger. You are in a situation that could cause fatal device damage or even bodily damage.
Caution	Means reader be careful. In this situation, you might perform an action that could result in module or product damages.
Note	Means note or tips for readers to use the module.

FCC Radiation Exposure Statement
This modular complies with FCC RF radiation exposure limits set forth for an uncontrolled environment. This transmitter must not be co-located or operating in conjunction with any other antenna or transmitter.
If the FCC identification number is not visible when the module is installed inside another device, then the outside of the device into which the module is installed must also display a label referring to the enclosed module. This exterior label can use wording such as the following: “Contains Transmitter Module FCC ID: UU3FCWSL05-A0 Or Contains FCC ID: UU3FCWSL05-A0” When the module is installed inside another device, the user manual of the host must contain below warning statements;
1. This device complies with Part 15 of the FCC Rules. Operation is subject to the following two conditions:
(1) This device may not cause harmful interference. (2) This device must accept any interference received, including interference that may cause undesired operation. Note: This equipment has been tested and found to comply with the limits for a Class B digital device, pursuant to part 15 of the FCC Rules. These limits are designed to provide reasonable protection against harmful interference in a residential installation. This equipment generates, uses and can radiate radio frequency energy and, if not installed and used in accordance with the instructions, may cause harmful interference to radio communications. However, there is no guarantee that interference will not occur in a particular installation. If this equipment does cause harmful interference to radio or television reception, which can be determined by turning the equipment off and on, the user is encouraged to try to correct the interference by one or more of the following measures: —
Reorient or relocate the receiving antenna. —Increase the separation between the equipment and receiver. —Connect the equipment into an outlet on a circuit different from that to which the receiver is connected. —Consult the dealer or an experienced radio/TV technician for help.
2. Changes or modifications not expressly approved by the party responsible for compliance could void the user's authority to operate the equipment. The devices must be installed and used in strict accordance with the manufacturer's instructions as described in the user documentation that comes with the product. Any company of the host device which install this modular with limit modular approval should perform the test of radiated & conducted emission and spurious emission,etc. according to FCC part 15C : 15.249 and 15.209 & 15.207 ,15B Class B requirement, Only if the test result comply with FCC part 15C : 15.249 and 15.209 & 15.207 ,15B Class B requirement， then the host can be sold legally.

History

Issue	Date	Change
1.0	2019-12	Initial draft
1.1	2020-06	▪ Added reference circuit ▪ Added packaging and storage content ▪ Added appendix content
1.2	2021-04	▪ Added the FCC information

Content

About This Document..... 3
Table Index..... 7
Figure Index..... 9
1 Introduction..... 10
1.1 RF Exposure Considerations..... 10
2 Product Concept..... 11
2.1 General Description..... 11
1.1 Simplified Block Diagram..... 12
1.2 Features and Application..... 12
1.3 Evaluation Board..... 13
1.4 List of Applicable FCC Rules..... 14
1.5 The Specific Operational Use Conditions..... 14
1.6 Limited Module Procedures..... 14
1.7 Trace Antenna Designs..... 14
1.8 Antennas..... 15
1.9 Label and Compliance Information..... 16
1.10 Information on Test Modes and Additional Testing Requirements..... 16
2 Pin Definitions..... 16
2.1 Pin Assignment..... 16
2.2 Pin Description..... 17
3 Technical Specifications..... 19
3.1 Absolute Maximum Ratings..... 19
3.2 RF Characteristics..... 19
3.3 Power Characteristics..... 20
3.4 GPIO Characteristics..... 21
3.5 Communication Interface Characteristics..... 21
3.6 General Specifications..... 22
4 Application Interface..... 22
4.1 Power Supply..... 23
4.2 Control Interface..... 24
4.3 Peripherals Interface..... 25
4.3.1 UART Interface..... 25
4.3.2 SPI Interface..... 27
4.3.3 Communication Port Selection..... 29
4.3.4 Serial Buffer..... 30
4.4 RF Interface..... 31
5 Application Function..... 31
5.1 Working Mode..... 31
5.1.1 AT Command Mode..... 32
5.1.2 Transparent Transmission Mode..... 33
5.2 Network Configuration..... 34

5.3 Activation Method 35
5.3.1 OTAA Mode 35
5.3.2 ABP Mode 36
5.4 Join Network 37
5.4.1 Automatic Network Access 38
5.4.2 Access Network Manually 38
5.4.3 Network Connection 38
5.4.4 Network Status 39
5.5 Warm Boot 40
5.6 DIO Function 40
5.6.1 DIOx Configuration Function 41
5.6.2 DIO PIN Mapping 42
5.6.3 Signal Indication 43
5.7 Add Send Channel 43
5.8 Remote AT Command 44
6 Data Business 45
6.1 Send Parameter Configuration 47
6.2 Data Transmission 48
6.3 Data Reception 50
6.4 Maximum Load Length 52
6.5 Sleep Mode 52
6.6 Normal Mode (SM=0) 52
6.7 UART Wake-up Mode (SM=1) 52
6.8 PIN Wake-up Mode (SM=2) 53
6.9 Periodic Wake-up Mode (SM=3) 53
6.10 PIN Cycle Wake-up Mode (SM=4) 54
7 Mechanical Dimensions 54
7.1 Mechanical Dimensions 54
7.2 Design Effect Drawings of the Module 55
7.3 Packaging 56
7.4 Storage 57
8 Appendix 57
8.1 Terms and Abbreviations 57

Table Index

Table 3- 1 WSL05-A0 pin description 17
Table 4- 1 Absolute maximum ratings of WSL05-A0 19
Table 4- 2 RF characteristics of WSL05-A0 19
Table 4- 3 Power characteristics of WSL05-A0 20
Table 4- 4 GPIO characteristics of WLS05-A0 21
Table 4- 5 Communication interface characteristics of WSL05-A0 21
Table 4- 6 General specifications of WSL05-A0 22

Table 5- 1 UART interface of WSL05-A0.....25
Table 5- 2 SPI interface of WSL05-A0..... 27
Table 6- 1 DIOx configuration function table.....41
Table 6- 2 DIO PIN mapping table.....42
Table 6- 3 Signal indication type definition..... 43

Figure Index

Figure 2- 1 WSL05-A0 module block diagram..... 12
Figure 3- 1 Pin assignment (Top View)..... 17
Figure 5- 1 Reference power supply circuit for battery powered..... 23
Figure 5- 2 External reset circuit.....24
Figure 5- 3 MCU reset circuit.....25
Figure 5- 4 UART connection..... 26
Figure 5- 5 UART communication timing diagram.....27
Figure 5- 6 SPI interface timing diagram..... 28
Figure 5- 7 SPI connection..... 29
Figure 5- 8 SPI communication timing diagram..... 29
Figure 5- 9 Antenna reference circuit design..... 31
Figure 7- 1 Data exchange flowchart.....46
Figure 7- 2 Schematic diagram of Class A.....50
Figure 7- 3 Schematic diagram of Class C.....50
Figure 8- 1 Module top dimension 54
Figure 8- 2 Module bottom dimensions (Bottom View)..... 55
Figure 8- 3 Module side dimensions..... 55
Figure 8- 4 Top view of WSL05-A0 module..... 错误！未定义书签。
Figure 8- 5 Bottom view of WSL05-A0 module..... 56

1 Introduction

This document describes the air interface, hardware interfaces and technical parameters which are related to customers' applications, and it can help customers quickly understand the interface definitions, electrical and mechanical details, as well as other information of WSL05-A0 module. This manual together with AT command user manual guides customers to integrate this module in various LPWAN applications easily.

1.1 RF Exposure Considerations

Ensure that this product is used in compliant with the requirements of the country and the environment, the following safety precautions must be observed during all phases of the operation, such as usage, service or repair of any LoRaWAN wireless products. If not so, Friendcom assumes no liability for customers' failure to comply with these precautions.

Full attention must be given to driving at all times in order to reduce the risk of an accident. Using the terminal while driving causes distraction and can lead to an accident. Please comply with laws and regulations restricting the use of wireless devices while driving.

Wireless devices may cause interference on sensitive medical equipment, so please be aware of the restrictions on the use of wireless devices when in hospitals, clinics or other healthcare facilities.

The wireless terminal contains a transmitter and receiver. RF interference can occur if it is used close to other electric equipment.

Do not use this product at any places with a risk of fire or potentially explosive atmospheres such as gasoline stations, oil refineries, etc.

2 Product Concept

2.1 General Description

WSL05-A0 module is a low-power, high-performance LoRaWAN module, which integrates LoRaWANTM protocol stack internally and complies with LoRaWANTM Specification 1.0.2 Class A \ C application standard.

WSL05-A0 module uses serial interface (UART or SPI) to exchange data with user devices. It has significant features such as automatic connection to the network and saving session context, which is convenient for users to quickly access the network and wireless data transmission services.

WSL05-A0 module supports the secondary development function (open CPU function), which can write and run the client's code, enabling users to implement their own specific applications without the need for an external MCU, saving costs for users and providing lower power consumption.

It has several options that support different bands, the following table shows the frequency bands of different variants.

With ultra-low power consumption, extensive coverage and simple peripheral circuits features, WSL05-A0 facilitates development and is well applicable to IoT applications that requires low rate and low power consumption. It adopts SMT package and its dimensions are 22 mm x 14 mm x 3.2 mm, which make it very suitable for size-constrained applications with tight space.

The hardware resources and functions which is available to customers include:

- UART interface, used for data communication, debugging and software upgrade.
- Provide 20K bytes of Flash space for user's secondary development program.
- Status indication interface supports NET_LIGHT (network indicator) and RESET function.

1.1 Simplified Block Diagram

WSL05-A0 module (hereinafter referred to as the module) integrates the LoRaWAN™ protocol stack and uses a serial interface (UART or SPI) to perform data and command interaction with the user host device, which can provide users with LoRaWAN network access and wireless data services quickly and easily.

The functional block diagram of the module is shown as follows.

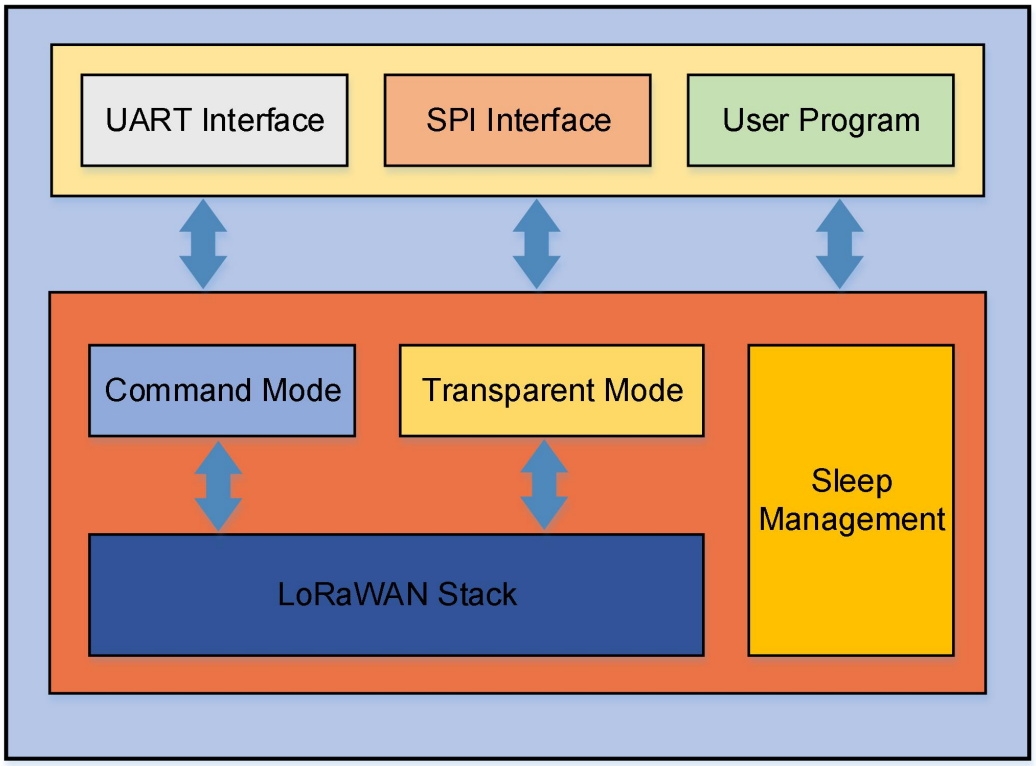

Figure 2-1 WSL05-A0 module block diagram

1.2 Features and Application

Key Features:

✓ Low power consumption: 1.5μA sleep current in WOR mode.

✓ Ultra-small size: 22mm×14mm 28 pins, SMT package.

✓ High performance:

Transmit output is 22dBm

Receiving sensitivity can reach -138dBm (SF12).

✓ Standard LoRaWAN protocol: LoRaWAN™ Specification

V1.0.2, Class A \ C.

- ✓ Multi-band supported:US915, AU915.
- ✓ User-friendly interface: UART, SPI, I^2C, GPIOs, ADC.
- ✓ Support AT command mode and transparent transmission mode.
- ✓ Multiple sleep management modes, support UART interface wake-up mode.
- ✓ Support battery power detection and optional automatic power reporting.
- ✓ UART firmware upgrade or FOTA.
- ✓ Support data transmission between two nodes

Applications:

WSL05-A0 LoRaWAN module is designed for end device which need long range and low power consumption, such as metering, sensor network, and other IoT applications as follows.

- ✓ Wireless sensor network
- ✓ Automatic meter reading
- ✓ Wireless remote monitoring
- ✓ Home and building automation, smart city
- ✓ Smoke alarm and security system
- ✓ Environmental monitoring
- ✓ Asset tracking

1.3 Evaluation Board

In order to help customers develop applications conveniently with WSL05-A0 module, Friendcom supplies evaluation board (EVB), USB data cable, antenna and other peripherals to control or test the module. For more details, please refer to Friendcom_WSL05-A0_EVK User Guide.

1.4 List of Applicable FCC Rules

FCC Part 15 Subpart C 15.245 &15.207 &15.209.

1.5 The Specific Operational Use Conditions

The module is a with communication functions.
Operation frequency: 902-928MHZ
Number of channel:72
Modulation:LORAWAN
The module can be used for mobile or portable applications. The host manufacturer installing this module into their product must ensure that the final composite product complies with the FCC requirements by a technical assessment or evaluation to the FCC rules, including the transmitter operation. The host manufacturer has to be aware not to provide information to the end user regarding how to install or remove this RF module in the user's manual of the end product which integrates this module. The end user manual shall include all required regulatory information/warning as show in this manual.

1.6 Limited Module Procedures

This module is a non-restricted module and meets the requirements of non-restricted module certification.

1.7 Trace Antenna Designs

The module come with a detachable split antenna. The connection area between the module and the antenna is A1.

The RF line (the line between the module and the antenna) is 52 ohms, the line width is 12 mils, and the line length is 50 mils. The PAD size, length*width=50mil*42mil.

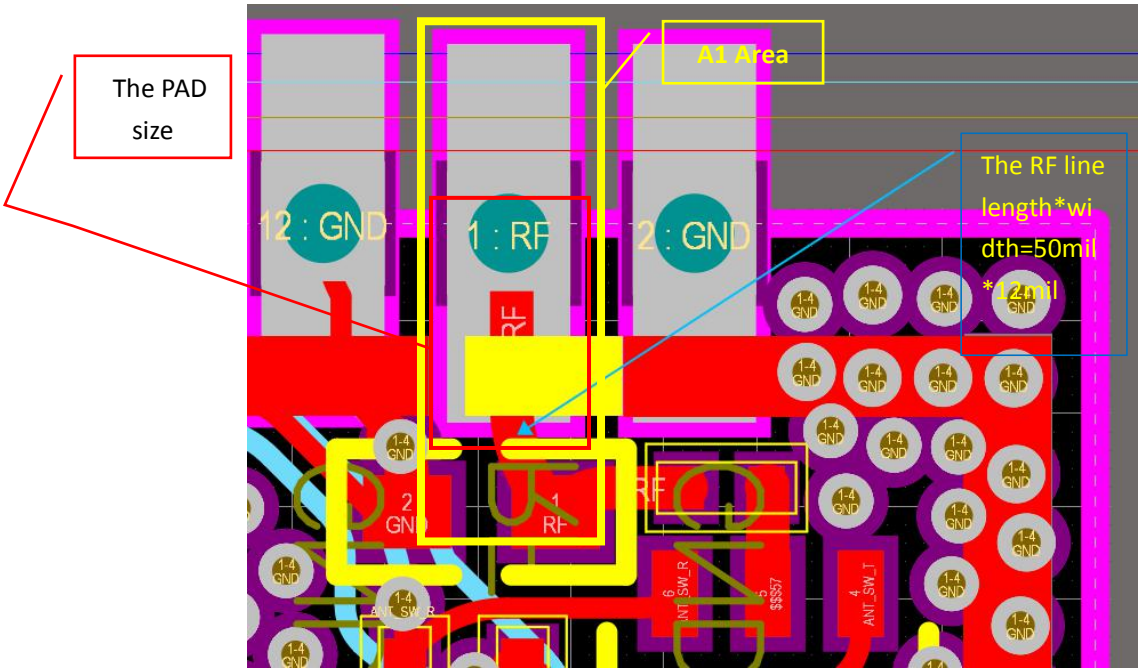

The WSL05-A0 module(A1 area) is welded with an SMA base, and there is an SMA female on the base. Connect the SMA female connector of the base to the SMA male connector of the antenna.

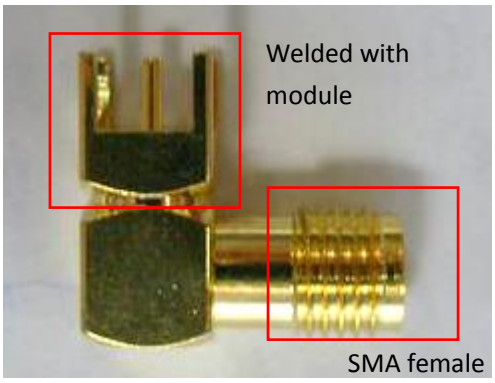

The SMA base

The Antenna

The insulating layer of the outer skin is rubber, and the inside of it is a ring-shaped inductive antenna, and the end connector of the antenna is SMA male. And the inside structure of the antenna as follows.

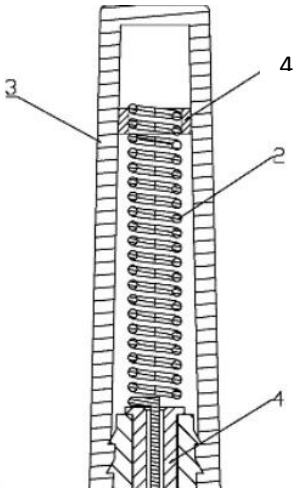

1.8 Antennas

Antenna Type: Antenna
Antenna gain: 2.0 dBi
Nominal Impedance:50Ω
Connector: SMA male
Dimensions-cm:6.0
VSWR:≤1.5

The size is as follows.High: 60.5±0.1, Diameter: ∅9.35±0.1

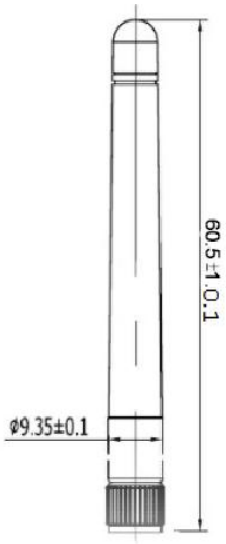

1.9 Label and Compliance Information

The label meets FCC certification requirements, including product model, product name, FCC ID and other content.

1.10 Information on Test Modes and Additional Testing Requirements

Test the common carrier command as follows:
The AT + 00 TXCW = 300915000, 20
(Continuous transmission for 300 seconds, frequency point 915000000, power 20dBm)

Serial port connection module, the default serial port parameters are 9600bps, 1 start bit, 1 stop bit, 8 data bits, no parity.
Use AT commands to interact with the module, each command ends with the character \r (0x0d)

2 Pin Definitions

There are 28 pins on WSL05-A0 and their pads are introduced in SMT package.

2.1 Pin Assignment

The following figure shows the pin assignment of WSL05-A0

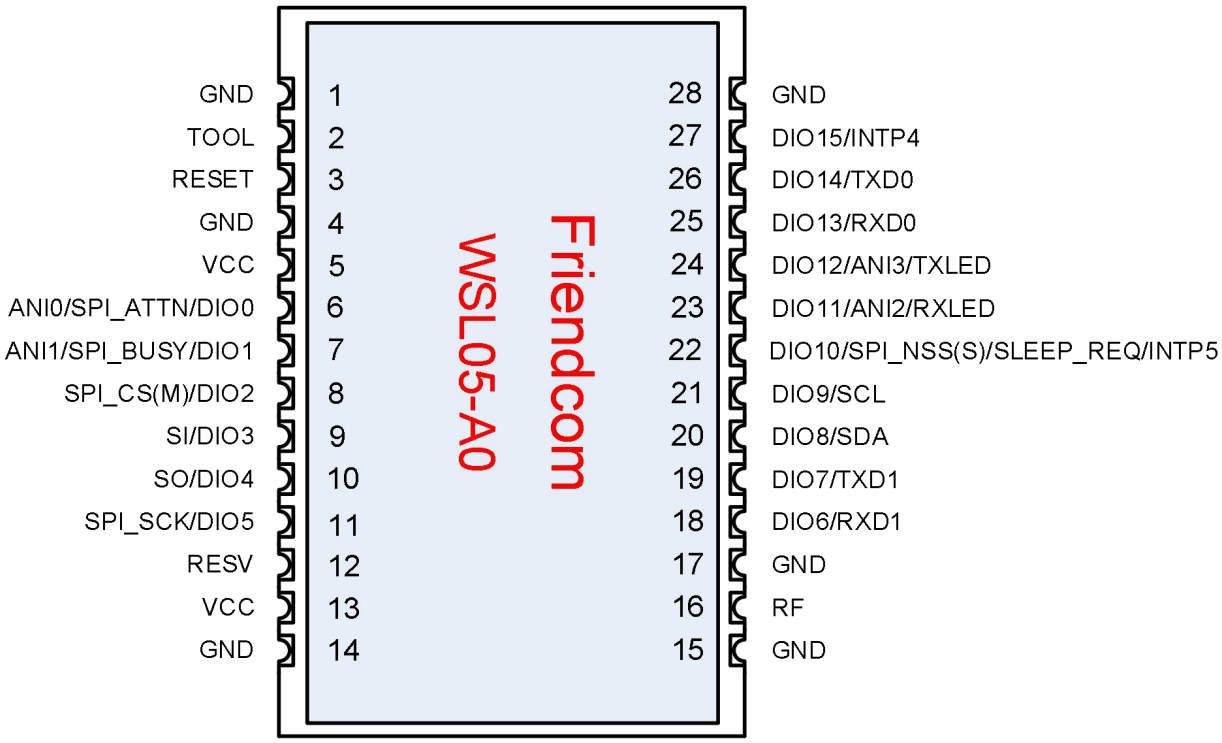

Figure 3-1 Pin assignment (Top View)

2.2 Pin Description

The following tables show the pin definition and description of WSL05-A0.

Table 3-1 WSL05-A0 pin description

Pin	Name	Reuse Function	Pull-up Resistor	Description
1	GND	-	-	Ground
2	TOOL	-	Yes	Program simulation and programming port
3	RESET	-	-	Reset pin, active low
4	GND	-	-	Ground
5	VCC	-	-	Power supply for the module, range 2.2V to 3.7V
6	DIO0	SPI_ATTN/ANI0	No	General-purpose I/O, ATTN pin in SPI slave mode, analog channel 0
7	DIO1	SPI_BUSY/ANI1	No	General-purpose I/O, BUSY pin in SPI slave mode, analog channel 1

8	DIO2	SPI_CS(M)	Yes	General-purpose I/O, CS pin in SPI master mode
9	DIO3	SI SPI_MISO(M) SPI_MOSI(S)	Yes	General-purpose I/O, SPI interface data input, Pay special attention： Used as SPI_MISO in master mode Used as SPI_MOSI in slave mode
10	DIO4	SO SPI_MOSI(M) SPI_MISO(S)	Yes	General-purpose I/O, SPI interface data output, Pay special attention： Used as SPI_MOSI in master mode Used as SPI_MISO in slave mode
11	DIO5	SPI_SCK	Yes	General-purpose I/O, Clock pin in SPI interface
12	RESV	-	-	**Reserved**
13	VCC	-	-	Power supply for the module
14	GND	-	-	Ground
15	GND	-	-	Ground
16	RF	-	-	RF input/output
17	GND	-	-	Ground
18	DIO6	RXD1	No	General-purpose I/O, RXD pin in UART1 port, debug interface and print debugging information
19	DIO7	TXD1	No	General-purpose I/O, TXD pin in UART1 port, debug interface and print debugging information
20	DIO8	SDA	Yes	General-purpose I/O, SDA pin in I^2C port
21	DIO9	SCL	Yes	General-purpose I/O, SCL pin in I^2C port
22	DIO10	SPI_NSS(S) / SLEEP_REQ / INTP5	Yes	General-purpose I/O, CS pin in SPI slave mode, External interrupt input pin
23	DIO11	ANI2\RXLED	No	General-purpose I/O, analog channel 2, RF receiving LED indication
24	DIO12	ANI3\TXLED	No	General-purpose I/O, analog channel 3, RF transmitting LED indication
25	DIO13	RXD0	No	General-purpose I/O, RXD pin in UART0 port
26	DIO14	RXD1	No	General-purpose I/O, TXD pin in UART0 port
27	DIO15	INTP4	Yes	External interrupt input pin
28	GND	-	-	Ground

3 Technical Specifications

3.1 Absolute Maximum Ratings

As stated that the values listed below may cause permanent device failure. Exposure to absolute maximum ratings for extended periods may affect device reliability.

Table 4-1 Absolute maximum ratings of WSL05-A0

Items	Symbol	Description	Min.	Typ	Max.	Unit
Voltage	VCCm	Maximum limit voltage provided to VCC pin	-0.3	-	3.9	V
Input Voltage	VIOm	Input voltage of GPIO port	-0.3	-	3.9	V
Temperature	Tmr	Operating temperature	-55		+115	℃
ESD Characteristics	HBM	Class 2 of ANSI/ESDA/JEDEC Standard JS-001-2014	-	-	2.0	KV

3.2 RF Characteristics

RF characteristic test reference voltage is VCC = 3.3V, temperature 25 ° C.

Table 4-2 RF characteristics of WSL05-A0

Items	Symbol	Condition	Min.	Typ	Max.	Unit
		US915	902	-	928	MHz
		AU915	915	-	928	MHz
Data Rate (LoRa)	DR	BW=125K, SF=12	-	292	-	bps
		BW=125K, SF=11	-	537	-	bps
		BW=125K, SF=10	-	976	-	bps
		BW=125K, SF=9	-	1.7	-	Kbps
		BW=125K, SF=8	-	3.2	-	Kbps

		BW=125K, SF=7		-	5.4	-	Kbps
			20dBm	-	19.7	-	dBm
			17dBm	-	16.9	-	dBm
			14dBm	-	13.8	-	dBm
			10dBm	-	10.4	-	dBm
Frequency Characteristics	Fs	Temperature range：-40~85°C		-	15	30	ppm
Output Impedance	Ro			-	50	-	Ω

3.3 Power Characteristics

Table 4-3 Power characteristics of WSL05-A0

Items	Symbol	Condition	Min.	Typ	Max.	Unit
Supply Voltage	VCC		2.2	3.3	3.7	V
Stand-by Current	Istdy	In CLASS A mode, when the sleep mode is SM = 0, RF is off and the module is in the state of waiting for serial data.	-	0.65	-	mA
Receive Current	Irx	In CLASS C mode, when the sleep mode is SM = 1, the average value of RF in the receiving state	-	4.6	-	mA
Sleep Current	Islp	In CLASS A mode, when the sleep mode is SM = 1, the module is in full sleep state.	-	1.5	3.0	μA

3.4 GPIO Characteristics

Table 4-4 GPIO characteristics of WLS05-A0

Items	Symbol	Condition	Min.	Typ	Max.	Unit
High-level Output Voltage	VOH	VCC=3.3V，IOH=-1.0mA	VCC-0.5	-	-	V
Low-level Output Voltage	VOL	VCC=3.3V，IOL=1.0mA	-	-	0.2	V
High-level Input Voltage	VIH		0.8 x VCC	-	VCC	V
Low-level Input Voltage	VIL		0	-	0.2 x VCC	V
High-level Output Current	IOH	Non-analog port	-	-	-10.0 **(Note 1)**	mA
		Analog port	-	-	-0.1	mA
Low-level Output Current	IOL	Non-analog port	-	-	20.0 **(Note 1)**	mA
		Analog port	-	-	0.4	mA
Pull-up Resistor	PU	Non-analog port, non-I2C interface **(Note 2)**	10	20	100	kΩ
		I2C interface **(Note 2)**	-	10	-	kΩ

Note

- **Note 1**: The total current must not exceed a maximum of 70 mA.
- **Note 2**: Analog ports do not support pull-up resistors. The I2C interface has a built-in 10k pull-up resistor, which cannot be canceled.

3.5 Communication Interface Characteristics

Table 4-5 Communication interface characteristics of WSL05-A0

Items	Symbol	Condition	Min.	Typ	Max.	Unit
UART Interface Baud Rate	BR	-	1200	9600	115200	bps
UART Interface Baud Rate Accuracy	BRerr	Temperature range：-40~85°C	-	-	±5	%

SPI Interface Clock Rate	SPIclk	-	-	-	1.0	MHz

3.6 General Specifications

Table 4-6 General specifications of WSL05-A0

Items	Symbol	Condition	Min.	Typ	Max.	Unit
Storage Temperature	Tstg	Storage temperature range	-40	-	125	°C
Operating Temperature	Top	Working temperature range	-40	-	85	°C
Operating Humidity	RHop	Operating humidity range	5	-	95	%
Dimension	-		22(L)X14(W)X3.2(H)			mm

4 Application Interface

WSL05-A0 is equipped with 28 SMT pads that can meet the functional requirements of different application scenarios. The following sub-chapters will provide detailed description of interfaces listed below:

- Power supply
- Control interface

- Peripherals interface
- RF interface

4.1 Power Supply

Power supply design consists two parts: circuit design and PCB layout.

1) Circuit design:

The design and layout of the power circuit is a very important part of the overall product design, and it affects the performance of the entire product. It is recommended that the external power supply should be an LDO power supply or directly connected to the battery. In order to reduce noise, in the PCB layout, connect 1.0μF and 47pF capacitors in parallel, as close as possible to the VOUT pin on the PCB.

If using a switching regulated power supply, it is recommended to use a switching power supply with a switching frequency of 500kHz or higher. The power supply wave must be limited to less than 250mV.

It is recommended to add a 10μF decoupling capacitor to the VCC pin of the module. The capacitor can be connected in parallel 47pF, 1.0μF and 10μF capacitors can be connected in parallel to filter out noise at multiple frequencies.

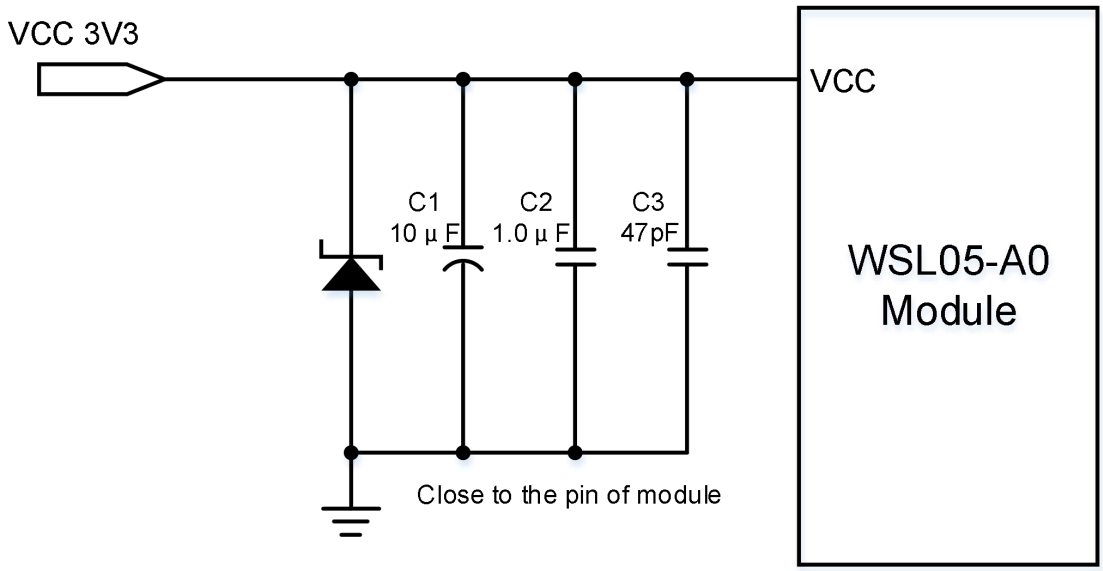

Figure 5-1 Reference power supply circuit for battery powered

2) PCB layout:

It is recommended to thicken the traces of VCC and GND as much as possible to ensure that the module has sufficient current loop.

4.2 Control Interface

WSL05-A0 provides RESET pin and TOOL pin as a control interface. Program programming or simulation need to connect VCC, GND, TOOL and RESET pins, users who requires secondary development should reserve these ports. The TOOL pin is internally connected with a pull-up resistor and it is recommended to float.

A reset circuit is integrated in the module. If no external reset is required, the RESET pin may not be connected.

WSL05-A0 module can be reset by an external reset circuit and MCU reset circuit. The reset reference circuit is shown below.

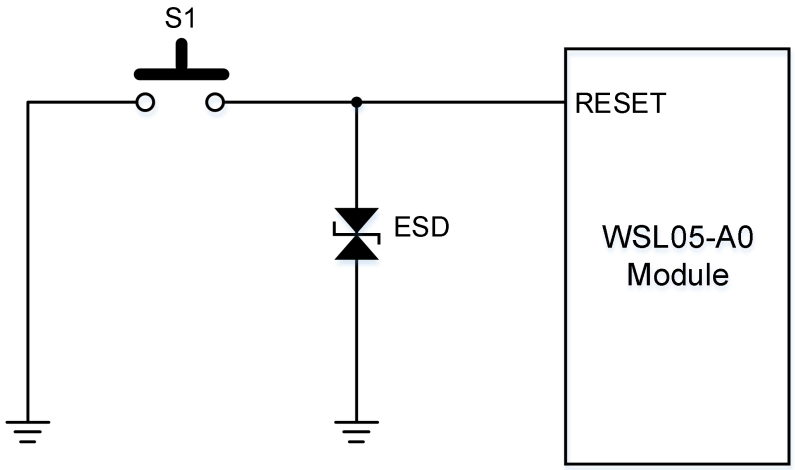

Figure 5-2 External reset circuit

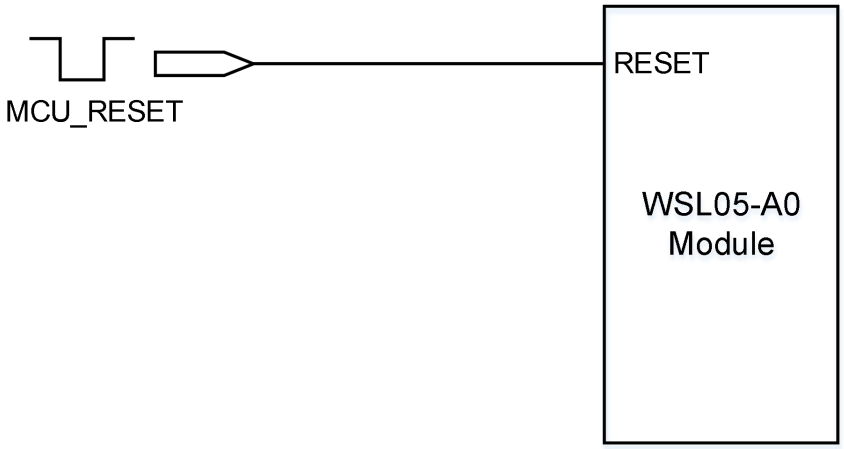

Figure 5-3 MCU reset circuit

4.3 Peripherals Interface

WSL05-A0 module provides external interfaces such as UART and SPI. UART0 and SPI interface that can be utilized as communication interfaces for data exchange, UART1 port is used as debug interface which can print debugging information.

4.3.1 UART Interface

The following table shows the UART interface of WSL05-A0.

Table 5-1 UART interface of WSL05-A0

Pin Number	Name	Description
25	RXD0	UART_RX pin, serial data input
26	TXD0	UART_TX pin, serial data output

Note

- WSL05-A0 does not support RTS and CTS functions for the time being.

By default, the UART interface is used as the communication interface with the user's host.The module may be forced to enable it after power-on or reset. In the case where the

UART interface is not used, it is recommended that the RXD0 pin be connected to a pull-up resistor and the TXD0 pin be left floating.

WSL05-A0 UART interface is compatible with CMOS logic levels. External controllers and host devices can be in the following two ways:

- An external logic voltage compatible MCU is used as the main controller and communicates through the UART peripheral;
- Connect to a PC through a logic level converter (such as a USB to RS-232 adapter board).

How to connect WSL05-A0 UART0 is as show below.

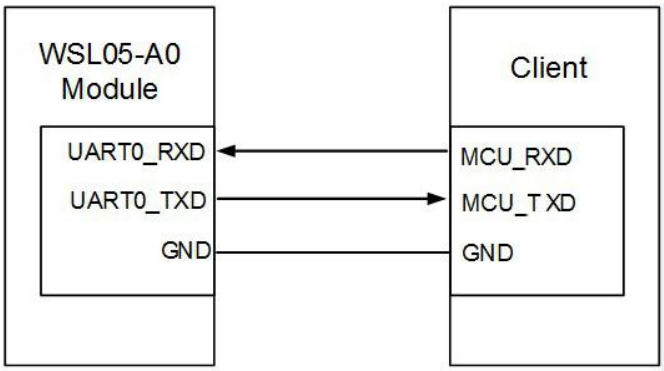

Figure 5-4 UART connection

To ensure successful serial communication, the UART interface of external controller and module needs to be compatible that Includes baud rate, start bit, data bit, parity check and stop bit.

Each data byte consists of a start bit (active low), 8 data bits (LSB), 0 or 1 parity bits, 1 or 2 stop bits, and the parity check is optional.

When UART is idle, it is represented by a logic high level. The start bit is a logic low level. The 8 data bits are sent in the low order first. After the data is sent, a check bit (if any) is sent. Send a stop bit to complete a byte transfer.

Generally, the parity-free transmission mode is used to improve efficiency. The figure below uses the 8N1 mode as an example to explain the UART logic signal timing.

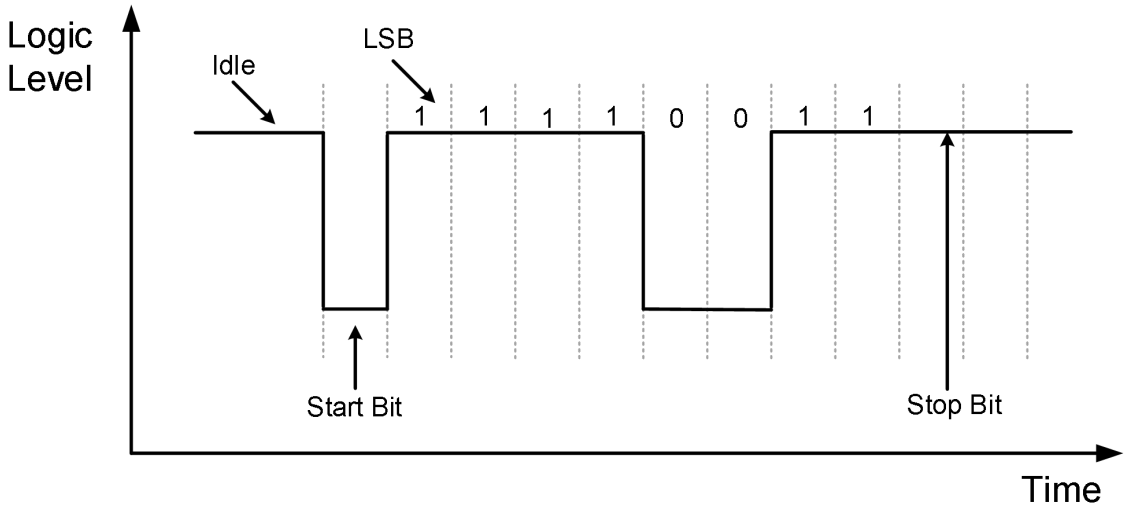

Figure 5-5 UART communication timing diagram

The baud rate, parity, and stop bits of the module can be configured by AT commands. For details , refer to AT command manual.

4.3.2 SPI Interface

The following table shows the SPI interface .

Table 5-2 SPI interface of WSL05-A0

Pin No.	Name	Description
22	SPI_NSS	Chip select signal CS, active low
7	SPI_BUSY	Status signal, indicating that the module is busy, the host should wait for the module to be pulled low before it can start sending data
11	SPI_SCK	Clock signal, provided by the host, low level when idle
9	SPI_MOSI(S)	Data input
10	SPI_MISO(S)	Data output
6	SPI_ATTN	Notification signal, the module actively pulls down to indicate that there is data that needs to be sent to the host. During the communication process, if pulled low, it indicates that the next data sent by the module to the host is valid

The SPI interface is used as a backup solution. When the external controller has no UART interface or high-speed data exchange is required, the SPI interface can be used instead of the UART interface.

When performing SPI communication, the module acts as a slave and needs to pay attention to the following characteristics:

- When using the SPI interface for data exchange, it is not recommended to run in transparent transmission mode, because it is impossible to identify whether the data is valid.
- Support full duplex, the maximum clock rate is 1MHz.
- Working in mode 0, namely CPOL = 0 (idle clock is low), CPHA = 0 (data is sampled on the rising edge of the clock).
- The data is sent the most significant bit (MSB) first.

The timing of SPI interface mode is shown below:

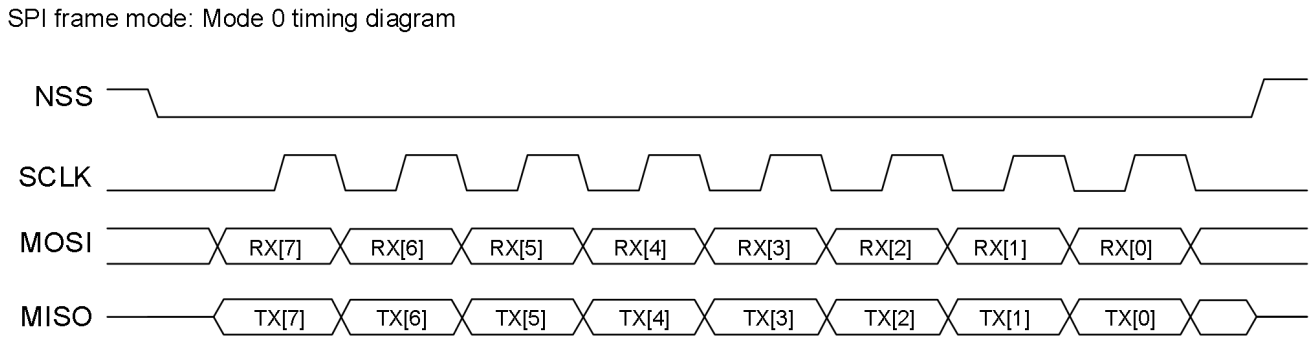

Figure 5-6 SPI interface timing diagram

This SPI interface of WSL05-A0 is not a standard interface. It added two connection lines(BUSY and ATTN). As shown below:

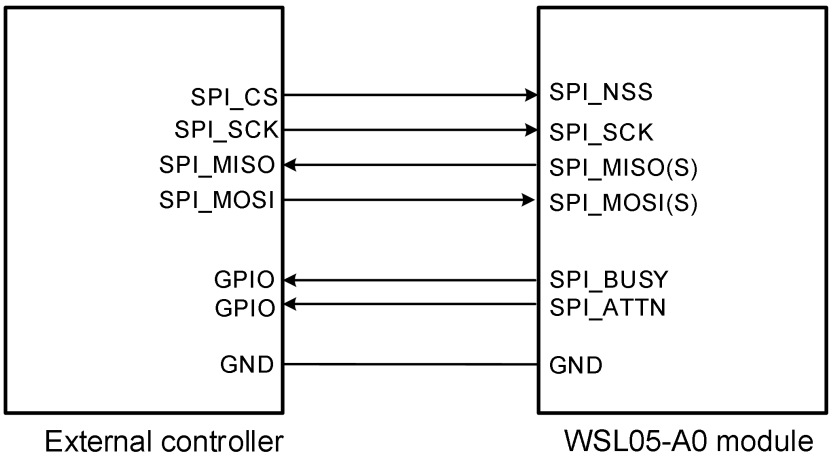

Figure 5-7 SPI connection

After the module detects that the SPI_NSS pin is pulled low, it wakes up from sleep mode (if in sleep mode) and begins to initialize the SPI peripherals. The peripheral controller must wait until the BUSY pin is pulled low to start the transmission.The module will pull the BUSY pin high again before the current byte transfer is completed. After the module receives a byte of data and stores the data in the receive buffer it pulls the BUSY pin low again. The peripheral controller must wait until BUSY is pulled low before transmitting the next byte. The transmission timing is shown below:

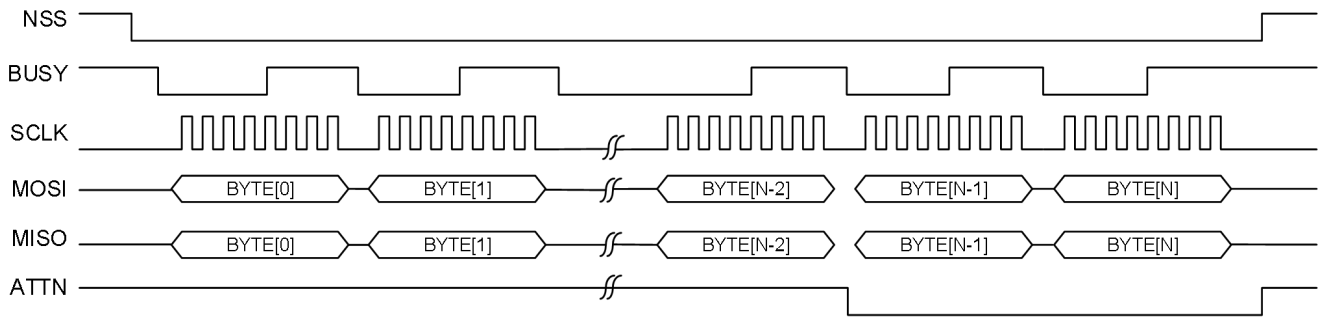

Figure 5-8 SPI communication timing diagram

4.3.3 Communication Port Selection

By default, the UART interface is used as a communication interface with the user's external host. The UART interface is forced to open when the module is powered on or reset. When both UART and SPI interfaces are enabled, the module can adaptively switch the interface according to user input.

To enable the SPI interface (slave mode), you need to configure the NSS (S), SCK, MISO (S), MOSI (S), BUSY, ATTN and other pins of the interface as the main function, that is, the corresponding DIOx configuration value is equal to 1.

When the user needs to use the SPI interface for secondary development (master mode), it is recommended to disable the corresponding SPI pin DIOx , and the SPI interface is directly controlled by the user code.

4.3.4 Serial Buffer

The serial buffer contains a send buffer and a receive buffer, which are used to temporarily store serial interface data.

Serial receive buffer:

After receiving serial data (UART RXD0 pin data or SPI interface data), module will store the data in serial receive buffer which is to wait for processing.

If the amount of data received from serial interface is too large and module cannot keep the data in the receive buffer, the receive buffer full or overflow signal is enabled and the newly input data packet will be discarded.

Serial send buffer:

When the module receives over-the-air data, the data is framed and stored in the serial transmit buffer. If the serial interface uses UART port, module outputs data through the TXD0 pin; if SPI interface is used, module will Try to pull the SPI_ATTN pin low and request the host to read the data.

If the amount of air data received by module is too large and the user fails to retrieve the data in time, the transmit buffer full or overflow signal is enabled and the newly received data packet will be discarded.

4.4 RF Interface

WSL05-A0 module requires 50Ω impedance characteristics of antenna, the cabling from module ANT interface to antenna also needs to be controlled within this impedance range. The reference circuit is shown below.

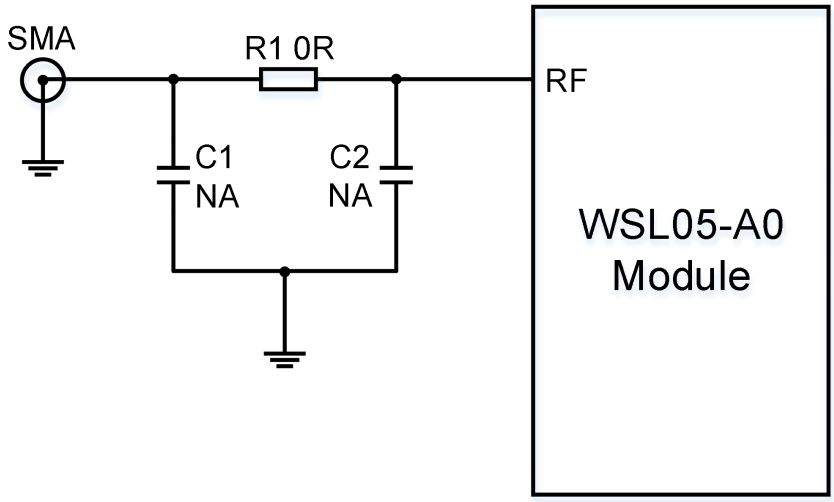

Figure 5-9 Antenna reference circuit design

5 Application Function

5.1 Working Mode

WSL05-A0 module supports AT command and transparent transmission mode. Different working modes have different data processing.

- AT command mode can only receive AT commands, which can be used for data transmission, parameter configuration, and status reading, etc.
- All data received in the transparent transmission mode is regarded as a payload and is only used for data transmission.

5.1.1 AT Command Mode

By default, the module is in AT command mode. The AT command mode can perform all operations on the module, including data sending and receiving, parameter configuration, and status reading.

After receiving an instruction, the module makes command analysis, execution, and response.

The format of AT command is to use AT as the leading characters and the carriage return character (\ r) as the end; the response command format begins and ends with the carriage return and line feed (\ r \ n). For more details, please refer to the AT command manual.

Through the test command, you can identify whether the AT command mode is activated. Send a command AT \ r to module, and the module responds \ r \ nOK \ r \ n, indicating that the module can accept AT command. The following is an example:

```
AT
OK
```

Among them, in order to facilitate reading, this article hides \ r (end character), \ r \ n (carriage return and line feed).

If module does not respond, it means that the module cannot accept AT commands at this time.Verify the following:

- Please check whether the wire is correct.
- Please check whether the baud rate, parity, stop bit and other configurations are correct.
- The module runs in UART sleep wake-up mode, the wake-up code should be added.
- The module is in transparent transmit mode.

Switch to transparent transmission mode

During AT command mode, you can switch to transparent transmit mode via sending AT + ATMODE = 1 command, as shown below:

```
AT+ATMODE=1
OK
```

At this time, if module needs to be in transparent transmit mode after next restart or reset,

you can re-enter the AT command mode through the command sequence and execute the AT + SAVE command to save the parameters. View the following example:

```
+++
OK
AT+SAVE
OK
```

5.1.2 Transparent Transmission Mode

In the transparent transmission mode, module regards all data received from the serial port as payload data, organizes it into LoRaWAN packets, and then sends the data to the server. When receiving the data from the server, only the payload data is output to the serial port.

In the transparent transmit mode, it may not be able to provide necessary status information, such as whether the transmission is successful, module status, signal strength, etc.

Note

- When using SPI as the data exchange interface with the user's external host, it is not recommended to run the module in transparent transmission mode.

Command sequence（GT + “+++” + GT）

The command sequence is used to activate the module to enter the AT command mode by sending a special character sequence in transparent transmit mode. GT stands for protection time, which means during this time serial port cannot have data activity. For the command sequence the serial port executes the following process:

- Idle for a period of time (1s), then send three "+" characters, and then idle for a period of time (1s).
- Among them, the protection time GT can be configured to other values through commands, the default is 1s.

After the module detects the command sequence, it returns an OK as a response. If there is

no response, verify the following:

- Please check whether the wire is correct.
- Please check whether the baud rate, parity, stop bit and other configurations are correct.
- The module runs in UART sleep wake-up mode, the wake-up code should be added.
- The module is in AT command mode.
- the default carriage return (\r\n), the carriage return (\r\n) should be canceled.

Switch to AT command mode

In transparent transmission mode, you can temporarily enter AT command mode by sending a command sequence. At this time, if a valid command isn't received within timeout period(default 10s), module will automatically return to transparent transmission mode; if the module needs to quickly return to transparent transmission mode, you can send AT + EXIT command.

If module want to stay in AT command mode,send AT + ATMODE = 0 to activate it. If the module needs to be in AT command mode after restart or reset, execute AT + SAVE to save parameters. See the following example:

```
+++
OK
AT+ATMODE=0
OK
AT+SAVE
OK
```

5.2 Network Configuration

Before using the module, please confirm the operating frequency band and working channel. Ensure that the upstream channel of the module exactly matches the receiving channel of the gateway before conducting subsequent activation operations and data sending and receiving .

For AU915, US915 and other frequency bands, the channels of module can be configured through the channel mask command (usually 8 channels are a group), such as selecting

channels 8 ~ 15, view operation example below:

```
AT+CHMASK=FF00
OK
AT+SAVE
OK
```

Or quickly set up by channel group, for example, select channel 8 ~ 15, namely group 2, operation example:

```
AT+CHGROUP=2
OK
AT+SAVE
OK
```

5.3 Activation Method

In order to access LoRaWAN network, module needs to perform an activation operation before use.Module supports two activation methods, OTAA and ABP, and the activation methods of the two modes are different.

The activation method can be selected by the + JOINMODE command and the default mode is OTAA.

5.3.1 OTAA Mode

OTAA mode is activated by sending a Join request to the server. If the server has already registered the module information, it will respond a Join acceptance to allow module to access network and the activation is complete.

Activation process in OTAA mode:

- First register module information on the server, that is, add OTAA device, set DevEui, AppKey, frequency band and other parameters.
- DevEui is the address of module which can be obtained through AT + DevEui? Command.

- Configure AppEui, AppKey and other parameters of the module.
- Set OTAA activation mode.
- Delete the session context of module and set AutoJoin flag.
- Enable hot start.
- Save parameters.
- After the configuration is complete, the Join operation can be performed automatically after the module is reset.

View an example of activation configuration for OTAA mode:

```
AT+DEVEUI=1122334455667788
OK
AT+APPEUI=1234567812345678
OK
AT+APPKEY=00112233445566778899AABBCCDDEEFF
OK
AT+JOINMODE=0
OK
AT+JOIN=0,1
OK
AT+HOTS=1
OK
AT+SAVE
OK
AT+RESET
OK
```

5.3.2 ABP Mode

ABP activation mode is to simulate activation operation by directly configuring same session context on server and module. ABP mode does not need to send a Join request to server, thereby simplifying the activation process.Activation process in ABP mode is as following:

- First register module information on server, namely, add ABP device, set DevAddr, NwkSKey, AppSKey, frequency band and other parameters.
- The DevAddr, NwkSKey and AppSKey parameters of the configuration module are the

same as those of the server.

- Set to ABP activation mode.
- Save parameters.
- After the configuration is complete, the module is in an activated state on reset (that can send data to the server).

View an example of activation configuration for ABP mode:

```
AT+DEVADDR=1
OK
AT+NWKSKEY=1234567890ABCDEF1234567890ABCDEF
OK
AT+APPSKEY=00112233445566778899AABBCCDDEEFF
OK
AT+JOINMODE=1
OK
AT+SAVE
OK
AT+RESET
OK
```

5.4 Join Network

In OTAA mode, to connect module to LoRaWAN server, the Join process is required. Module provides two trigger modes for network access request:

- Automatic network access
- Manual access

After module is powered on or reset, it will determine whether the join process is needed according to different configurations or conditions. It is recommended to set this parameter before activating the module.

Note

There is no Join process in ABP mode.

5.4.1 Automatic Network Access

Automatic network access function can automatically detect connection status between module and server. When module lost connection to server or the module determines disconnection from the server, it can automatically trigger the Join process.

When the module is powered on or reset (hot start is not enabled), if the hot start function has been enabled and there is valid context data in the EEPROM, it will not trigger Join process;

In OTAA mode, when automatic network access is enabled, the automatic Join process will be triggered when the module is in one of the following situations:

- When transmitting the acknowledgement upstream frame, if the ACK response is not received for a certain number of times, module will force the Join process, even in manual mode.
- The network is disconnected. When sending a data frame, the module will automatically trigger a Join operation. When the Join is successful, the module will automatically transmit the data.

Enable auto join trigger mode, view the example below:

```
AT+JOIN=0,1
OK
```

5.4.2 Access Network Manually

In manual mode, the user decides when to execute Join process. The module will not automatically trigger the Join process unless it is in the automatic mode case 2.When it is abnormal in sending data continuously for multiple times, the network status should be checked, and if it is not connected, the re-connection command should be executed.

Set a manual network access trigger mode and view an example below:

```
AT+JOIN=0,0
OK
```

5.4.3 Network Connection

When automatic Join conditions are triggered or Join process is executed manually, module starts to execute Join process in the background. Module will try to send Join request in

different channels until it receives Join response from server. If module can not join the network for a certain number of times, module will terminate the Join process to save power.

At any time, you can use the “AT+JOIN” instruction to stop and restart the Join process.

Stop the Join process, operation example:

```
AT+JOIN=0
OK
```

Start the Join process, operation example:

```
AT+JOIN=1
OK
```

You can also set the trigger mode while executing the JOIN instruction, as shown in the following example:

```
AT+JOIN=1,1
OK
```

When the module initiates a Join request, it responds to the following prompt message:

```
+JOIN:Starting
+JOIN:OK
```

Returning OK indicates that the network connection is successful.

Note

When the module is running in transparent transmission mode, it will not return any prompt information. It is recommended to switch to AT command mode for operation. After joining successfully, switch to transparent transmission mode to send data.

5.4.4 Network Status

The module's network connection status can be read at any time. When it is not connected, the module cannot respond to data transmission services.

Read the network connection status, the following example:

```
AT+JOIN?
+JOIN:1,1,8,16
OK
```

Among them, the first parameter returned indicates the network connection status, 1 indicates that it is connected, 0 indicates that it is not connected; the second parameter

indicates the current network access trigger mode, 1 indicates automatic trigger, and 0 indicates manual trigger.

For more detailes description of the instructions, please refer to the AT instruction manual.

5.5 Warm Boot

The warm boot function is used to save the LoRaWAN session context. When the warm boot function is enabled, the module automatically saves the session context parameters to the EEPROM every time the Join succeeds and sends upstream data. When the module is powered on or reset, it directly this parameter is taken out from the EEPROM, so there is no need to repeat the Join operation.

When used in the following scenarios, the warm boot function can be enabled:

- For applications where the deployed network is relatively stable and the device may be powered off frequently;
- Or the application that can send data immediately after the module is powered on or reset again

To enable the hot start function, the operation example:

```
AT+HOTS=1
OK
AT+SAVE
OK
```

If you need to update the session context, you can first delete the content of the session context, and then restart the JOIN instruction, as in the following example:

```
AT+JOIN=0
OK
AT+JOIN=1
OK
```

5.6 DIO Function

The DIOx (x = 0 ~ 15) port pins of the module can be configured as ordinary IO functions or as peripheral functions, and some pins can be used as signal indication functions. The pin function is configured through the + DIOx instruction, the following operation example:

```
AT+DIO0=1
OK
AT+SAVE
OK
```

5.6.1 DIOx Configuration Function

DIOx configuration function is shown as following table.

Table 6-1 DIOx configuration function table

DIOx =	Description
0	Disable the port, the module will not do anything to the DIO configured to this value
1	Main functions, such as peripheral pins such as SPI, UART, I2C, etc.
2	Auxiliary function, currently temporarily used as ADC
3	Floating input
4	Pull-up input (Not all DIOs support pull-up input)
5	Drop-down input (reserved, temporarily not supported)
6	Fixed output 0
7	Fixed output 1
8	Signal indication 0
9	Signal indication 1 (inverted from indication 0 signal)

Note

- When configured as normal IO input (floating input, pull-up input), you can read the port level status through AT + RDIOx? command
- When configured as analog input, you can read the port ADC value through AT + ADCn ?; or read the port voltage value through AT + ADCnV? Command, while n = 0 ~ 3.
- When configured as a signal indication, you can map such as RS485, sleep / wake status indication, send / receive LED indication, etc. to the corresponding DIO port.

5.6.2 DIO PIN Mapping

Table 6-2 DIO PIN mapping table

DIOx	0	1	2	3	4	5	6	7	8	9
	Disable	Main function	Accessibility	Floating input	Pull-up input	Drop-down input	Fixed output	Fixed output	Signal indication 0/1	
DIO0	-	SPI_ATTN	ANI0	FL	-	-	0	1	RS485	
DIO1	-	SPI_BUSY	ANI1	FL	-	-	0	1	BUSY	
DIO2	-	SPI_CS(M)	-	FL	PU	-	0	1	RX1	
DIO3	-	SPI_MOSI(S)	-	FL	PU	-	0	1	RS485	
DIO4	-	SPI_MISO(S)	-	FL	PU	-	0	1	ONSLEEP	
DIO5	-	SPI_SCLK	-	FL	PU	-	0	1	RX2	
DIO6	-	RXD1	-	FL	PU	-	0	1	-	
DIO7	-	TXD1	-	FL	PU	-	0	1	-	
DIO8	-	SDA	-	-	PU	-	0	1	-	
DIO9	-	SCL	-	-	PU	-	0	1	-	
DIO10	-	SLEEP_REQ SPI_NSS(S)	-	FL	PU	-	0	1	-	
DIO11	-	-	ANI2	FL	-	-	0	1	RXLED	
DIO12	-	-	ANI3	FL	-	-	0	1	TXLED	
DIO13	-	RXD0	-	FL	PU	-	0	1	-	
DIO14	-	TXD0	-	FL	PU	-	0	1	-	
DIO15	-	-		FL	PU		0	1		

Note

- The blue mark in table indicates the default configuration value. In order to ensure that the sleep current is stable when the module is floating, the module configures most ports with pull-up inputs. For ports without pull-up resistors, it is configured with fixed output 0 or 1.
- SPI_CS (M) indicates that the module acts as a master, and SPI_NSS (S) indicates that the

module acts as a slave.

- DIO0、DIO1、DIO11、DIO12 do not support pull-up input.
- SDA and SCL are internally connected with 10K pull-up resistors and cannot be cancelled.

5.6.3 Signal Indication

The module can output some special signals to adapt to different applications. When the conditions are met, the indication will be set (output 0/1), and after the condition is eliminated, the indication will be cleared (output 1/0). The following table describes.

Table 6-3 Signal indication type definition

Name	Description
RS485	RS485 transceiver control signal line
BUSY	Busy status indicator can be used to indicate whether data can be sent to the module. When data is sent to the module, it is set, cleared after the transmission is completed, and set when the network is not connected
RX1	Receive window RX1 open instruction, can be used to indicate the time of RX1 open
RX2	Receive window RX2 open instruction, can be used to indicate the time of RX2 open
ONSLEEP	Sleep and wake-up status indication, used to indicate that the module is currently in sleep or working state
TXLED	Send data indication, generally send LED indicator light
RXLED	Receive data indication, generally receive LED indicator

Note

The difference between signal indication 0 and signal indication 1 is that the signal is inverted.

5.7 Add Send Channel

For AS915 frequency bands, only 3 transmission channels are provided by default. You can

increase the transmission channel by command. You can also add up to 15 channels. To increase the transmission channel, you must determine the parameters such as channel number, frequency point, and rate range.

The command format for increasing the sending channel is as follows:

+TXCH=<Channel>,<Freq>,[MinDr],[MaxDr]

Among them, Channel and Freq are required items, and the rate ranges MinDr and MaxDr are optional and can be omitted. If omitted, the module will use the default values.

5.8 Remote AT Command

In order to achieve remote control or configure module parameters, the module uses port 221 as a remote AT command access channel. In order to save air transmission as much as possible, the remote AT command format has been optimized, and the AT leading and ending characters (carriage return) are omitted. For the detailed format of AT commands, please refer to the AT command manual.

The remote AT command supports multiple consecutive commands, separated by semicolons, the format is as follows:

+COMMAND?;+COMMAND=para1,para2

The following takes reading VCC voltage and setting RTC as an example:

- The server sends the following string to port 221:

  +VCC?;+RTC=2019-10-20 00:00:00

- The module response is as follows:

  +VCC:3.345

  OK

  OK

Among them, the first OK indicates successful reading of VCC, and the second OK indicates successful setting of RTC.

Note

- Port 221 is used as a remote AT command access channel and cannot be used as a user port;
- In CLASS A mode, commands can only be sent to the module when the module sends upstream data frames.
- When the length of the response frame is greater than the maximum allowed packet length, the response frame will be discarded;

6 Data Business

The module needs to go through network initialization, network activation and other operations before it can be used for data transmission. The following figure shows the operation flow of the module and the flow chart of data transmission, which is convenient for users to understand.

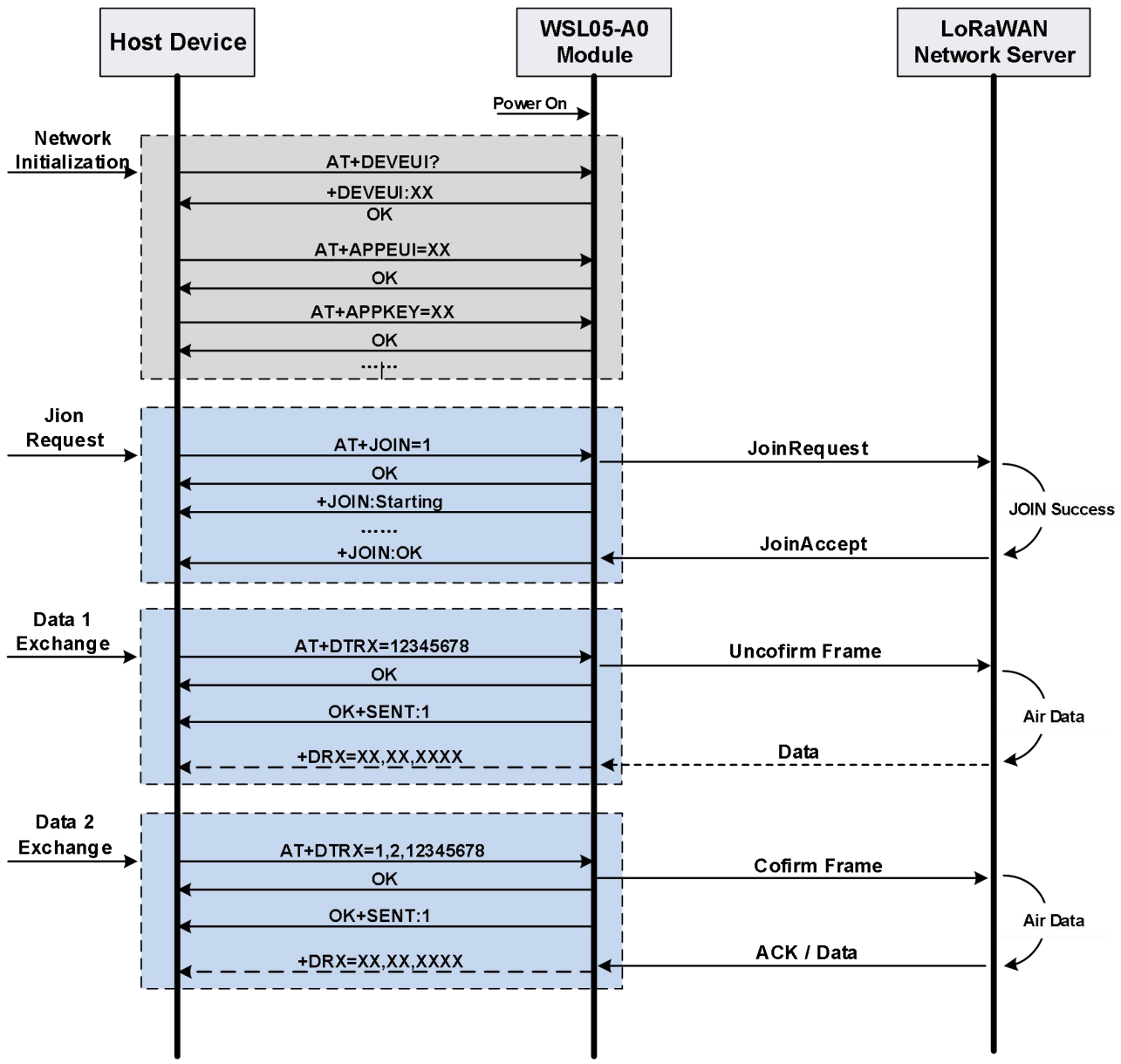

Figure 7-1 Data exchange flowchart

The network initialization process only needs to be set when the module is activated for the first time. The network access request process only needs to be executed when the network access mode is manually triggered and the warm boot function is cancelled, otherwise the module will be automatically executed.

Normally, after the module is successfully connected to the network, it always thinks that it is connected to the server. Only when sending an acknowledgment upstream data frame, after a certain number of consecutive unanswered times, the module will be diagnosed as

disconnected, and then the module will automatically trigger a network access request. When the warm boot function is enabled, after the module is successfully connected to the network, the module will be in the network connection state after being powered on.

6.1 Send Parameter Configuration

During data transmission, according to different application scenarios, some parameters may need to be adjusted, such as rate adaptation, transmit power, rate, duty cycle, application port, etc. Users should configure appropriate parameters according to their own application.

1) Rate adaptation

The rate adaptation function is used by the server to adjust the transmission power and rate of the module to achieve the best power saving performance. Operation example:

```
AT+ADR=1
OK
```

After the rate adaptation is turned on, the server needs to collect the signal quality of the module, which may increase additional network traffic. For a fixed network with a stable signal, using a fixed transmission power and rate may achieve better results.

2) Transmit power

Use the + TXPWR command to configure the default transmit power. The module will use this default value to start transmitting data first. The transmission power setting range is related to the frequency band. For a more detailed description, please refer to the LoRaWAN protocol.

In order to facilitate special applications, the module can be forced to use a certain transmit power, which can support a maximum of 22dBm. Operation example:

```
AT+TXPWR=22,1
OK
```

3) Data rate

Through the + DATARATE command to configure the default data rate, the module will use this default value to start transmitting data first. The rate setting range depends on the frequency band. For a more detailed description, please refer to the LoRaWAN

protocol.

4) Send duty cycle

The transmit duty ratio is used to limit the frequency of data transmission. In addition to the regional regulations that must be enabled, you can use this function to limit the module to transmit data to avoid excessive consumption of traffic resources by certain devices.

Example of setting the duty cycle of sending:

```
AT+TXDC=1,5
OK
```

Example of operation to turn off duty cycle:

```
AT+TXDC=0
OK
```

5) Application port

The application port is application-specific. The port is used to distinguish different application categories. The LoRaWAN server pushes the frames of the effective port (1 ~ 223) to the application. Operation example:

```
AT+APPPORT=5
OK
```

6.2 Data Transmission

The module supports two frame types: unacknowledged upstream data frame and confirmed upstream data frame. When using non-acknowledged upstream data frames to transmit data, the server does not need to respond to ACK frames, which can effectively save traffic, but it is impossible to determine whether the data is successfully transmitted.

When using the confirm uplink data frame to transmit data, each transmission server needs to respond to the ACK frame response, otherwise it will trigger the retransmission mechanism until the ACK response is received, or it has reached the maximum number of

transmissions before stopping. Confirm that although the upstream data frame increases the data traffic, the reliability of the data is effectively guaranteed.

Since the LoRaWAN network supports 8 upstream channels, but only supports 1 downstream channel, under normal circumstances, you should use as many unacknowledged upstream data frames as possible to transmit data.

The module sends data through the + DTRX command. You can set the default frame type and number of transmissions before sending data.

Example of setting frame type and transmission times:

```
AT+CONFIRM=0,1
OK
```

Among them, the first parameter indicates the default frame type, 0 indicates unacknowledged uplink data frame, and 1 indicates acknowledged uplink data frame; the second parameter indicates the number of transmissions, and 1 indicates transmission once.

After setting, send data directly:

```
AT+DTRX=12345678
OK
```

Or, directly specify the frame type and number of transmissions. The specified frame type and number of transmissions are only valid for this transmission. The following example:

```
AT+DTRX=0,1,12345678
OK
```

When the module sends successfully, it returns the status:

```
OK+SENT:1
```

When the module fails to send, it returns the status:

```
ERR+SENT:1
```

6.3 Data Reception

According to the communication mechanism specified in the LoRaWAN protocol specification, the module delays RX1Delay after the upstream data frame, and then opens the receiving windows RX1 and RX2 to receive data in turn, as shown in the following figure:

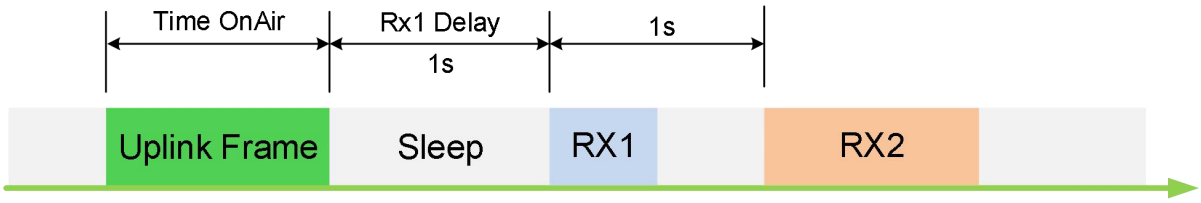

Figure 7-2 Schematic diagram of Class A

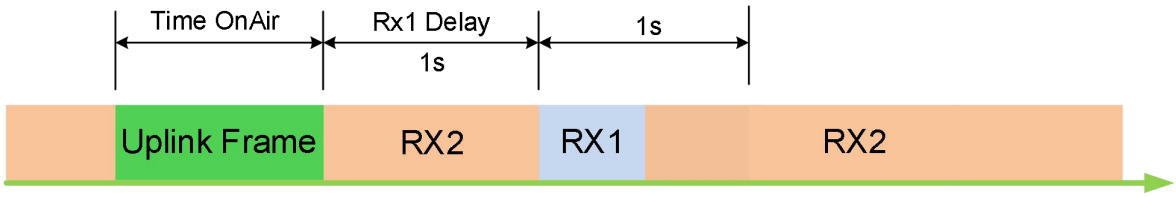

Figure 7-3 Schematic diagram of Class C

When the module is used as a CLASS A device, the radio frequency is normally dormant and cannot receive data at this time. It must first actively send upstream data and then receive data during RX1 and RX2, and then return to the dormant state after the process ends.

When the module is a CLASS C device, under normal circumstances, the radio frequency is in the interface window RX2 state and can receive data.

When the module receives the downlink data, it will first store the data in the serial transmission buffer. If the module works in the AT command mode, the module will package the data as a received data response frame and output it to the serial port.

The output format supports both HEX and STR, as defined below:

+DRX:[RxWin],[DownLinkCounter],[Port],[Length],<Payload>,[RSSI],[SNR]

+DRXSTR: [RxWin], [DownLinkCounter], [Port], [Length], <Payload >, [RSSI], [SNR]

Note

- Content in "[ ]" is an optional option, which can be enabled and canceled through RXOPT (receive option byte).

The definition of the received option byte is as follows:

RXOPT	Name	Default Value	Description
Bit7	RxWin	0	Receive window
Bit6	-	0	reserve
Bit5	DownLinkCounter	0	Downstream frame count value
Bit4	Port	1	Application port
Bit3	Length	1	Load data length
Bit2	Payload	0	Load data type 0: HEX type, use + DRX instruction output, 1: STR type, use + DRXSTR instruction output
Bit1	RSSI	0	Received signal strength
Bit0	SNR	0	Receive SNR

By default, RXOPT = 0x18, the output format is:

+DRX: Port, Length, Payload

At this time, if the server sends data 0x12, 0x34, 0x56, 0x78 to port 5, the module responds as follows:

```
+DRX:5,4,12345678
```

Note

- When the module works in transparent transmission mode, the module only returns the load data.

6.4 Maximum Load Length

The maximum load sent depends on the rate. For details, please refer to the LoRaWAN protocol specification. When the transmission length is greater than the maximum load, the module cannot perform the send operation.

In addition, the uplink data frame may carry MAC command information, and it cannot be sent according to the maximum packet length. In this case, the module will first trigger the reporting of the MAC command, and the data requested to be sent will be discarded.

6.5 Sleep Mode

In order to support battery-powered applications, the module has designed a variety of power management modes to minimize system power consumption. When the sleep management function is enabled, the module can execute different sleep strategies according to different stages to ensure that the module runs as deep as possible to obtain the best performance.

The sleep management mode is set by the sleep mode instruction, operation example:

```
AT+SM=1
OK
AT+SAVE
OK
```

6.6 Normal Mode (SM=0)

The normal mode is that the module does not do any sleep and is in full-speed operation. At this time, the module is always in a state of waiting for serial data. At this time, there is no need to implement a wake-up mechanism, so the response time is fastest, but the power consumption is relatively large.

6.7 UART Wake-up Mode (SM=1)

The UART wake-up mode uses the jump signal of the RXD pin to wake up the module, so it is necessary to send a wake-up code to wake up the module before sending data. Only one byte of wake-up code is needed to wake up the module.

Under normal circumstances, the module has been in a deep sleep state. When it is awakened, it begins to receive serial data and processes the data at the same time. After processing, it returns to the deep sleep state.

In order to minimize power consumption, when the module detects that there is no data activity on the serial port, it will enter a deep sleep state. When there is still data being sent, the module will automatically wake up and handle subsequent operations.

The wake-up code must meet certain rules to wake up the module. The supported wake-up codes are: 0xFF, 0xFE, 0xFC, 0xF8, etc. You can use the space character when testing.

6.8 PIN Wake-up Mode (SM=2)

The pin wakeup mode is to wake up the module through the level change of the SLEEP_REQ pin. This mode is suitable for two situations:

1) Pin wake up

When the SLEEP_REQ pin is pulled low, if the module is already in an idle state (the serial port has no data activity), it will enter a deep sleep state, otherwise it will wait until it is idle. If there is data service, it will automatically wake up processing in the background.

When the SLEEP_REQ pin is pulled high, the module resumes full-speed operation, which is equivalent to the SM = 0 mode.

2) SPI wake up

When using the SPI interface to communicate with the host device, the SLEEP_REQ pin is used as the SPI_NSS pin. When pulled low, the module is woken up, and then starts to receive SPI data. After the SPI transmission is completed, the module processes the data in the background. After processing, the deep sleep state is restored

6.9 Periodic Wake-up Mode (SM=3)

Periodic wake-up mode, that is, let the module sleep for a period of time, then wake up for a period of time, and then start again. During sleep, the module cannot be awakened by external events. During wake-up, it is equivalent to SM = 0 mode.

The periodic wake-up mode is not very applicable, and can only be applied to applications

that trigger reporting at a fixed period.

For detailed instructions on setting the sleep time, please refer to the AT instruction manual.

6.10 PIN Cycle Wake-up Mode (SM=4)

Pin cycle wake-up mode is a combination of pin wake-up and cycle wake-up modes. When the module is in the sleep state, the SLEEP_REQ pin can be used to wake up the module in advance.

7 Mechanical Dimensions

This chapter describes the mechanical dimensions of the module. All dimensions are measured in mm, and the tolerances for dimensions without tolerance values are ±0.05mm.

7.1 Mechanical Dimensions

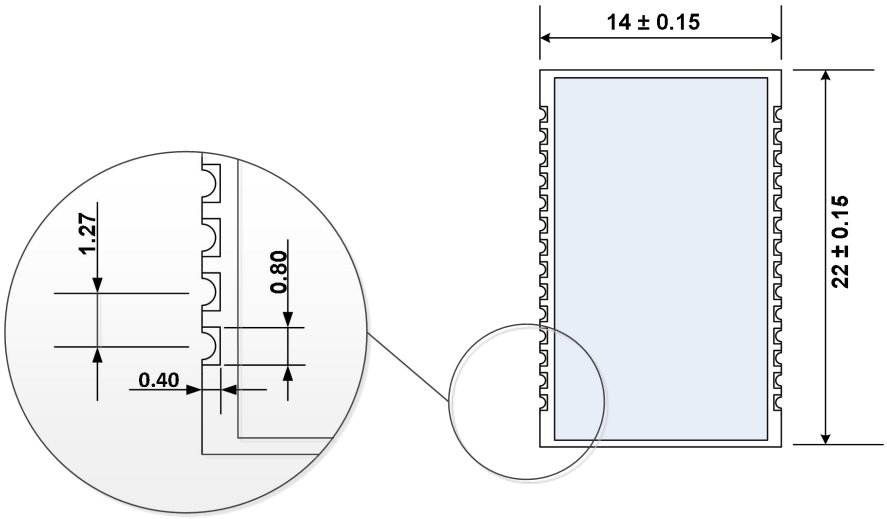

Figure 8-1 Module top dimension

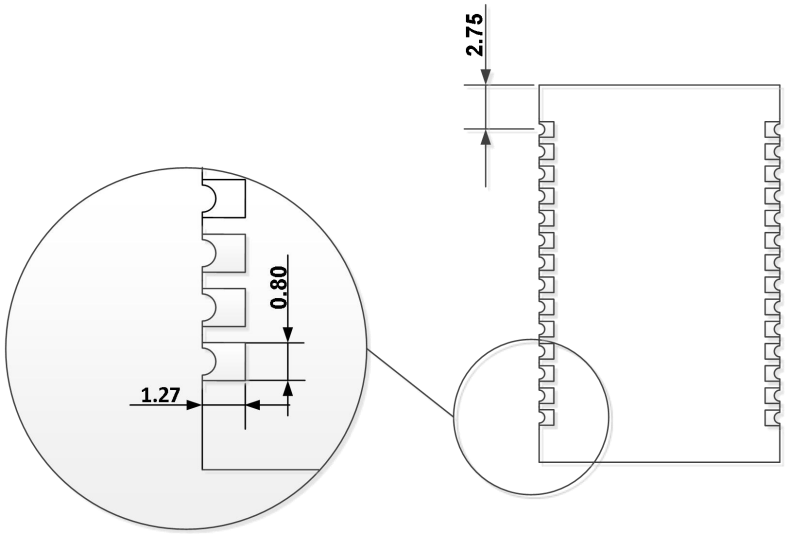

Figure 8-2 Module bottom dimensions (Bottom View)

Figure 8-3 Module side dimensions

7.2 Design Effect Drawings of the Module

Figure 8- 5 Bottom view of WSL05-A0 module

Note

These are design effect drawings of WSL05-A0 module. For more accurate pictures, please refer to the module that you get from Friendcom.

7.3 Packaging

WSL05-A0 modules are packed in vacuum-sealed bags on delivery to guarantee a long shelf life. The bag should not be opened until the devices are ready to be soldered onto the application. Follow the same package of the modules again in case of opened for any reasons.

If exposed to air for more than 48 hours at conditions not worse than 30°C/60% RH, a baking procedure should be done before SMT. Or, if the indication card shows humidity greater than 20%, the baking procedure is also required. Do not bake modules with the package tray directly.

7.4 Storage

WSL05-A0 is stored in a vacuum-sealed bag, the storage restrictions are listed below.

1) Shelf life in the vacuum-sealed bag: 12 months at <40ºC/90%RH.

2) After the vacuum-sealed bag is opened, devices that can be subjected directly to reflow soldering or other high temperature processes if the following conditions are met:

- Mounted within 168 hours at the factory environment of ≤30ºC/60%RH.
- Stored at <10%RH.

1) Devices require baking before mounting, if any circumstance below occurs.

- When the ambient temperature is 23ºC±5ºC and the humidity indication card shows the humidity is >20% before opening the vacuum-sealed bag.
- The module have exposed to air for more than 48 hours at conditions not worse than 30°C/60% RH.
- Stored at >10% RH after the vacuum-sealed bag is opened.

8 Appendix

8.1 Terms and Abbreviations

Abbreviation	Description
ABP	Activation By Personalization
ESD	Electro-Static Discharge
EVB	Evaluation Board
FOTA	Firmware Over-The-Air
GPIO	General Purpose Input /Output
GT	Protection Time
HF	High Frequency
LDO	Low Dropout Regulator
LED	Light Emitting Diode
LF	Low Frequency
LoRa	Long Range
LSB	Least Significant Byte

OTAA	Over-The-Air Activation
PCB	Printed Circuit Board
RF	Radio Frequency
RTC	Real Time Clock
RSSI	Received Signal Strength Indication
SM	Sleep Mode
SMT	Surface Mount Technology
SPI	Serial Peripheral Interface
UART	Universal asynchronous receiver-transmitter