Ultra-Small size LoRaWAN module

WSL02-A0

V1.0.0

Document information

Info	Content
Keywords	*LoRaWAN, Module, Ultra-Small size, AT command*
Abstract	This document is a datasheet of WSL02-A0 LoRaWAN module.

Shenzhen Friendcom Technology Development Co. Ltd
6/F, 17 Building, Guangqian Industrial Park, Xili Town, Nanshan District, Shenzhen, China, 518055

Notice

The information in this document has been carefully reviewed and is considered to be accurate. However, Friendcom assumes no liability resulting from any inaccuracies or omissions in this document, or from use of the information obtained herein. Friendcom reserves the right to make changes to any products described herein and reserves the right to revise this document and to make changes from time to time in content hereof with no obligation to notify any person of revisions or changes. Friendcom does not assume any liability arising out of the application or use of any product or software described herein.

Copyrights

This manual and Friendcom products described herein may include or describe copyrighted Friendcom material and are considered technical proprietary of Friendcom CO., LTD. Accordingly, any copyrighted material of Friendcom and its licensors contained herein or in Friendcom products described in this manual may not be copied, reproduced, distributed, merged or modified in any manner without the express written permission of Friendcom.

Usage and Disclosure Restrictions License Agreements

The software described in this document is property of Friendcom and its licensors. It is furnished by express license agreement only and may be used only in accordance with the terms of such an agreement.

Copyrighted Materials

Software and documentation are copyrighted materials. Making unauthorized copies is prohibited by law. No part of the software or documentation may be reproduced, transmitted, transcribed, stored in a retrieval system, or translated into any language or computer language, in any form or by any means, without prior written permission of Friendcom.

Trademarks

Friendcom® and Friendcom logo are registered Trademarks. All other product or service names which are mentioned in this document are the property of their respective owners.

Copyright @ Friendcom Communications 2018. All rights reserved.

Shenzhen Friendcom Technology Development Co. Ltd
6/F, 17 Building, Guangqian Industrial Park, Xili Town, Nanshan District, Shenzhen, China, 518055

Content

Content 3

1 General description 5

1.1 Simplified Block Diagram 5

1.2 Pin description 5

2 Electrical Characteristics 6

2.1 Absolute Maximum Ratings 6

2.2 Operating Range 6

2.3 Module Specifications 7

3 Typical Performance Characteristics Measurement 8

4 Application Information 11

4.1 Package Information 11

4.2 Internal connection 11

4.3 Interface of Module 12

4.4 Reference design with WSL02-A0 Module 12

5 Application in LoRaWAN 13

5.1 LoRaWAN 13

5.2 LoRaWAN sensor with WSL02-A0 14

Shenzhen Friendcom Technology Development Co. Ltd
6/F, 17 Building, Guangqian Industrial Park, Xili Town, Nanshan District, Shenzhen, China, 518055

WSL02-A0 ultra-small size LoRaWAN Module

Low Power ultra-small Size LoRaWAN Module

Figure 1-1 WSL02-A0 Module Outline

General description

WSL02-A0 LoRaWAN Module is a low cost, low power and ultra-small size module, embedded with Semtech's LoRa propriety chip SX1276 and ST's ultra-low power STM32 serial MCU.

The module designed by Friendcom (Shenzhen) is targeted to application in sensor network and others IOT devices powered by battery which need low power consumption to extend the battery lifetime.

This datasheet will give some details of description of the module, including HW design info, performance validation, and application information.

Applications

The WSL02-A0 LoRaWAN Module is designed for end device which need long range and low power consumption, such as metering, sensor network, and others IoT application.

Key features

- Low power consumption:1.45uA sleep current in WOR mode
- Ultra-small size:14mm X 20mm,18 pins SMT package
- High performance:
  WSL02-A0:TXOP=20dBm@868MHz/915MHz
  160dB link budget, suitable for long range
- User-friendly interface: USART/I2C/USB/ADC/GPIOs
- Support standard LoRaWAN protocol
- Regional band: EU868, US915 and US915Hybrid, AU915, AS923, KR920, IN865

Shenzhen Friendcom Technology Development Co. Ltd
6/F, 17 Building, Guangqian Industrial Park, Xili Town, Nanshan District, Shenzhen, China, 518055

This product datasheet contains a detailed description of the WSL02-A0 performance and functionality. Please consult with Friendcom for the latest updates, Firmware or errata.

1 General description

The WSL02-A0 incorporates SX1276 and STM32L07x, and is well suited for node in the networking of IoT. Based on the powerful functions and performance of SX1276, the WSL02-A0 could operates in both (G)FSK and LoRa. In LoRa mode, BW with 500kHz could be used.
And with the STM32L07x MCU, the module could provide SPI, UART, I2C, ADC and some others GPIOs for customer to extend their application. WSL02-A0 support 20dBm@HF (high frequency) band (868MHz/915MHz).

1.1 Simplified Block Diagram

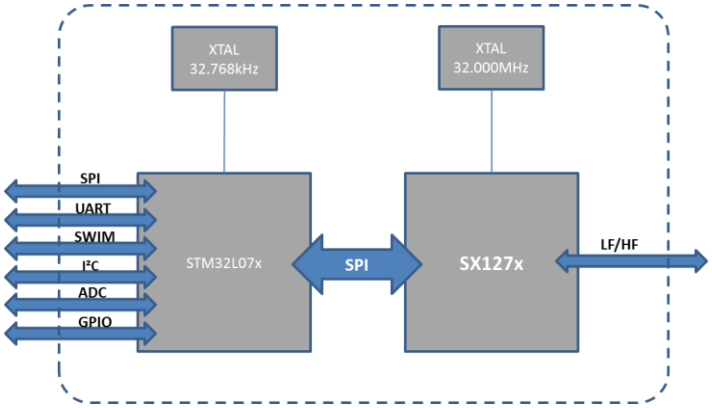

Figure 1-1 Block Diagram of WSL02-A0

1.2 Pin description

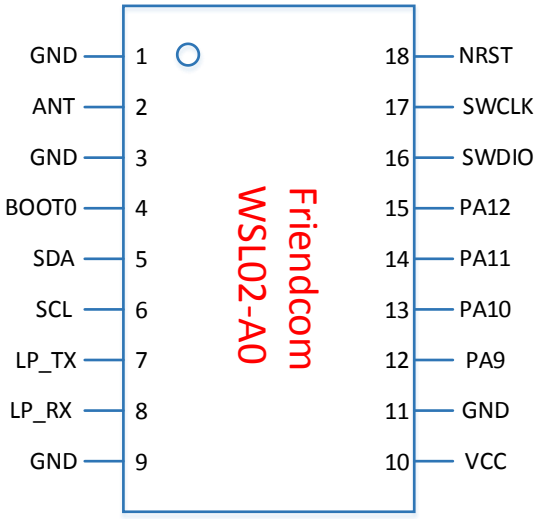

Figure 1-2 schematic of WSL02-A0

Shenzhen Friendcom Technology Development Co. Ltd
6/F, 17 Building, Guangqian Industrial Park, Xili Town, Nanshan District, Shenzhen, China, 518055

Table 1-1 pin description

Number	Name	Type	Description
1	GND	-	Ground
2	RFIO_HF	-	RF input/output
3	GND	-	Ground
4	BOOT0	I	BOOT0 for MCU (connected to GND via 10k internal)
5	I2C_SDA	I/O	SCL of I2C from MCU; or GPIO from MCU, PB7
6	I2C_SCL	I/O	SDA of I2C from MCU; or GPIO from MCU, PB6
7	LPUART_TX_ADC	I/O	Low power USART_TX from MCU; or GPIO from MCU, PA2
8	LPUART_RX_ADC	I/O	Low power USART_RX from MCU; or GPIO from MCU, PA3
9	GND	-	Ground
10	VCC	-	Supply voltage for the module
11	GND	-	Ground
12	PA9/USART1_TX	I/O	USART1_TX from MCU; or GPIO from MCU, PA9
13	PA10/USART1_RX	I/O	USART1_RX from MCU; or GPIO from MCU, PA10
14	PA11/USB_DM	I/O	GPIO from MCU, PA11
15	PA12/USB_DP	I/O	GPIO from MCU, PA12
16	SWDIO	I/O	SWDIO of SWIM for program download
17	SWCLK	I/O	SWCLK of SWIM for program download
18	NRST	I	Reset trigger input for MCU

2 Electrical Characteristics

2.1 Absolute Maximum Ratings

As stated that the values listed below may cause permanent device failure. Exposure to absolute maximum ratings for extended periods may affect device reliability.

Table 2-1 Absolute Maximum Ratings

Item	Description	min	max	unit
VCCmr	Supply voltage	-0.3	+3.9	V
Tmr	Temperature	-55	+115	℃
Pmr	RF input level	-	+10	dBm

2.2 Operating Range

Table 2-2 Operating Range

Item	Description	min	max	unit
VCCop	Supply voltage	+1.8	+3.6	V

Shenzhen Friendcom Technology Development Co. Ltd
6/F, 17 Building, Guangqian Industrial Park, Xili Town, Nanshan District, Shenzhen, China, 518055

Top	Temperature	-40	+85	℃
Pop	RF input level	-	+10	dBm

2.3 Module Specifications

Table 2-3 Module Specifications

ITEMs	Parameter	Specifications	Unit
Structure	Size	14(W) X 20(L) X 2.6(H)	mm
	Package	18 pins, SMT	
Electrical Characteristics	power supply	3.3V type	V
	Sleep current	1.45uA (WDT off)	uA
	Operation current (Transmitter+MCU)	120mA @20dBm	mA
	Operation current (Receiver+MCU)	16mA @BW125kHz	mA
	Output power	max. 20dBm	dBm
	Sensitivity	-139dBm @SF12, BW125kHz,	dBm
	Harmonics	<-40dBm above 1GHz	dBm
Interface	RFIO	RF port	
	USART	2 group of USART, include 2pins	
	USB	1 group of USB, include 2 pins	
	I2C	1 group of I2C, include 2 pins	
	ADC	2 ADC Input, include 2 pins, reuse with LPUART port	
	NRST	Manual reset pin input	

3 Typical Performance Characteristics Measurement

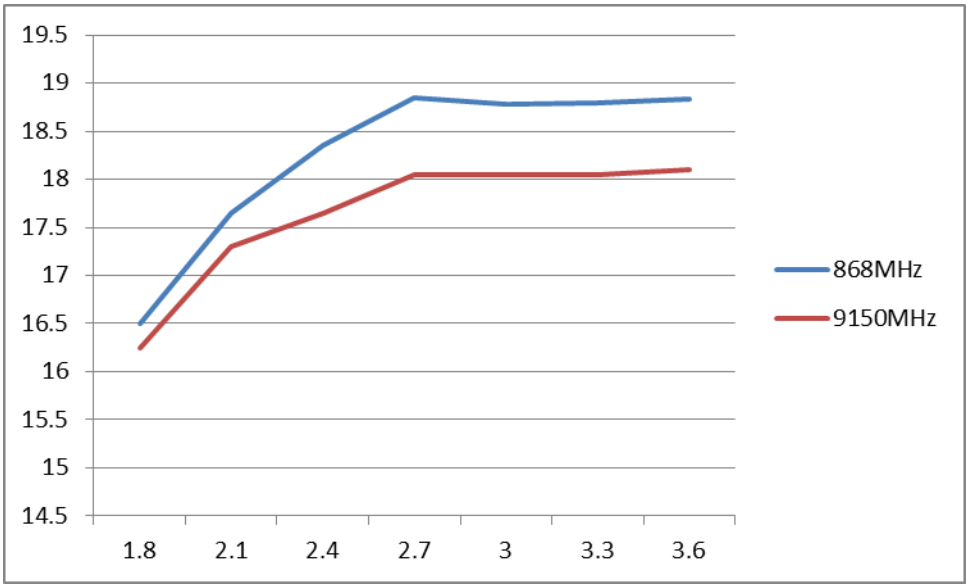

Figure 3-1 TXOP vs Supply voltage

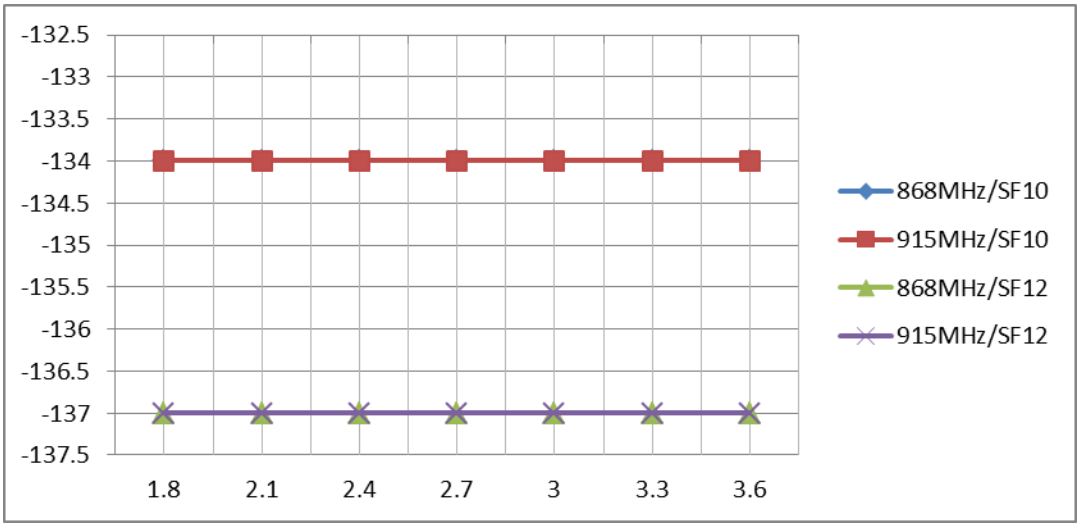

Figure 3-2 Sensitivity (SF10/SF12, 125 kHz) vs Supply voltage

Shenzhen Friendcom Technology Development Co. Ltd
6/F, 17 Building, Guangqian Industrial Park, Xili Town, Nanshan District, Shenzhen, China, 518055

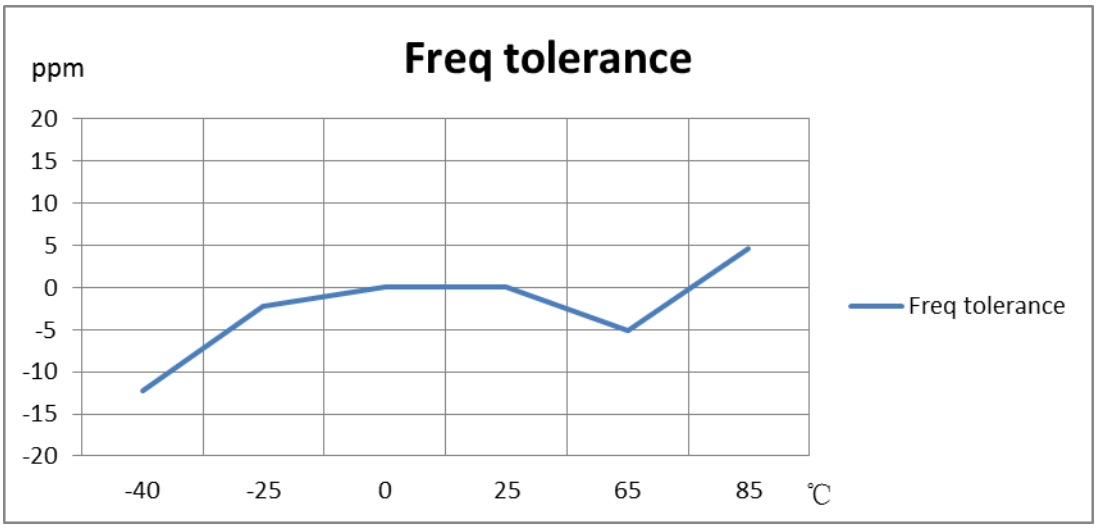

Figure 3-3 Frequency Tolerance vs Temperature

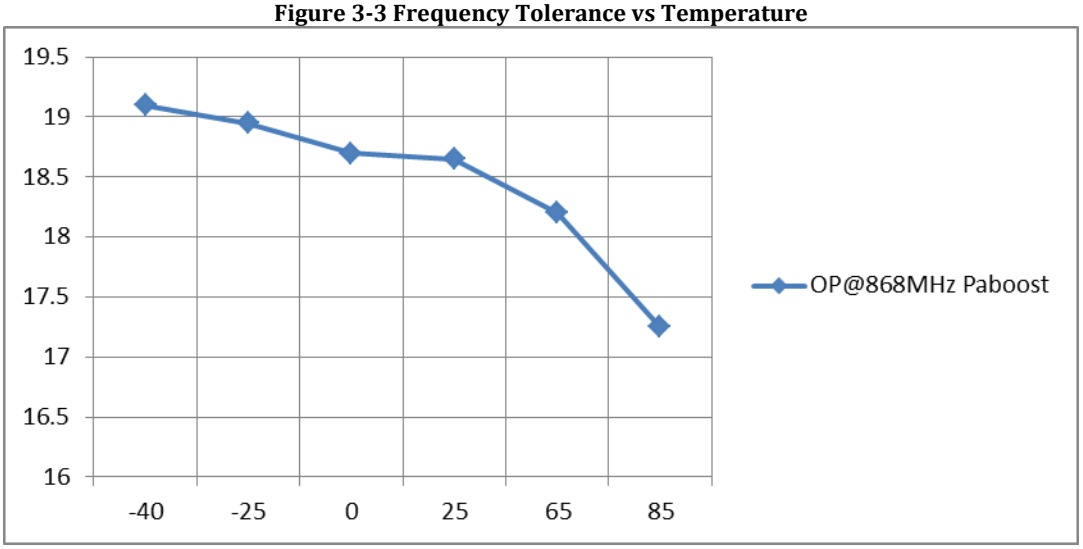

Figure 3-4 TXOP vs Temperature

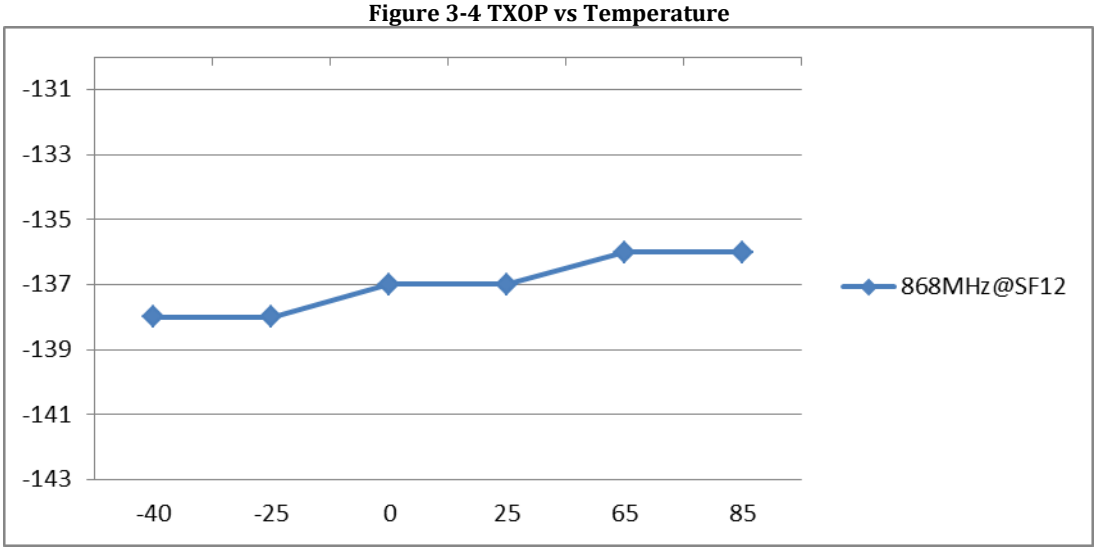

Figure 3-5 Sensitivity (SF12, 125 kHz) vs temperature

Shenzhen Friendcom Technology Development Co. Ltd
6/F, 17 Building, Guangqian Industrial Park, Xili Town, Nanshan District, Shenzhen, China, 518055

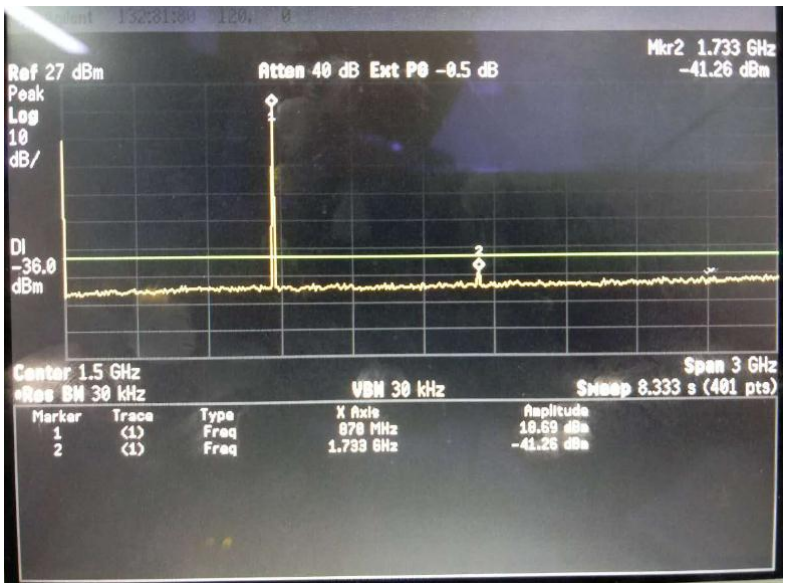

Figure 3-6 Harmonics measurement @Frf=868MHz, TXOP=20dBm

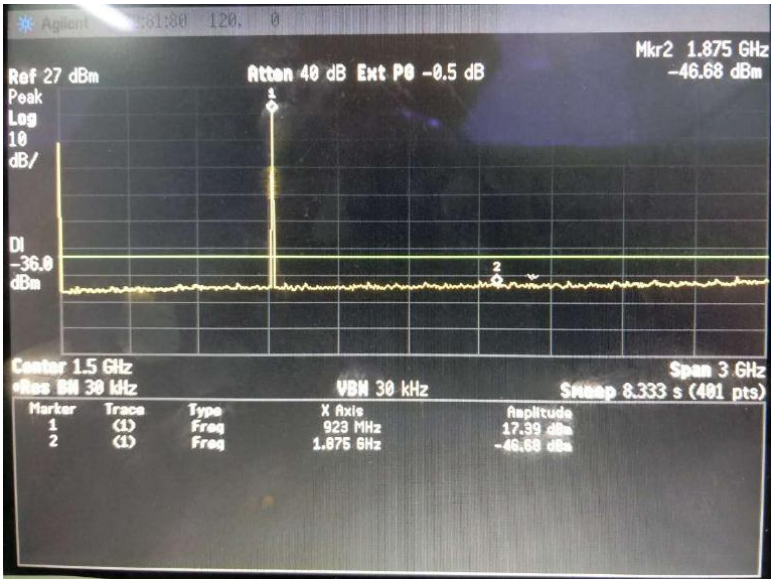

Figure 3-7 Harmonics measurement @Frf=915MHz, TXOP=20dBm

Shenzhen Friendcom Technology Development Co. Ltd
6/F, 17 Building, Guangqian Industrial Park, Xili Town, Nanshan District, Shenzhen, China, 518055

4 Application Information

4.1 Package Information

The WSL02-A0 is available in an 18-pin SMT package as shown below:

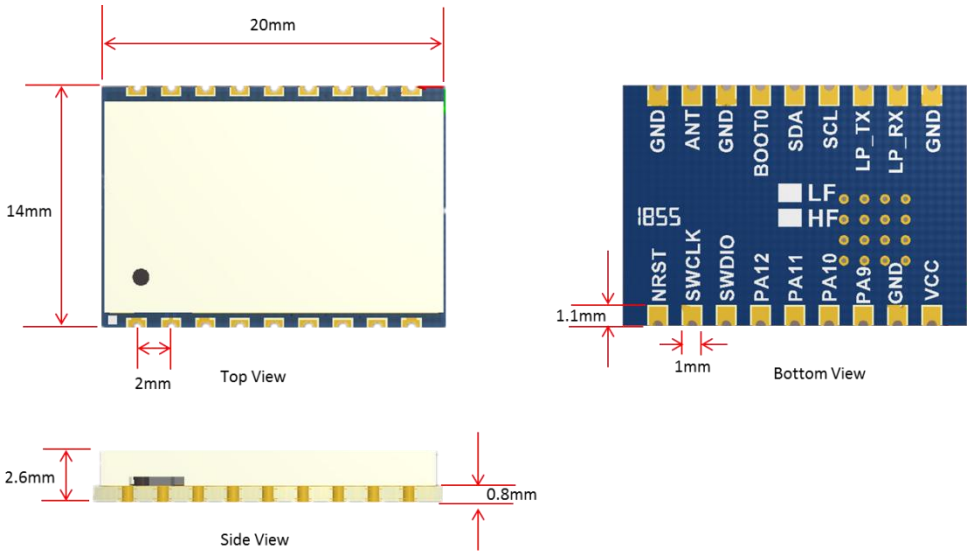

Figure 4-1 package outline drawing

Figure 4-2 show the recommended land pattern for layout.

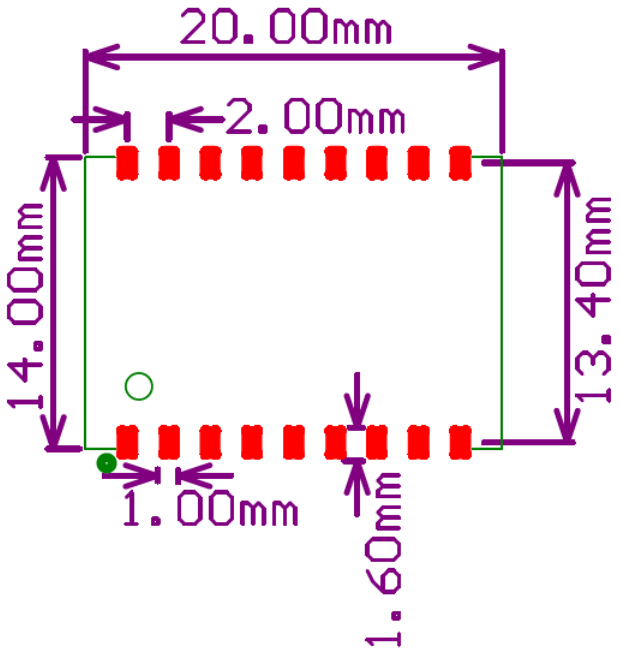

Figure 4-2 Recommended land pattern

4.2 Internal connection

Table 4-1 and Table 4-2 provides the internal connection which could help customers who would design their own firmware instead of using AT command mode.

Shenzhen Friendcom Technology Development Co. Ltd
6/F, 17 Building, Guangqian Industrial Park, Xili Town, Nanshan District, Shenzhen, China, 518055

Table 4-1 Internal IO connection between MCU (STM32L07x) and Radio (SX1276)

Chip	SX1276		STM32L07x	
Item	**Pin Num**	**Description**	**Pin Num**	**Description**
IO connection Between SX1276 and STM32L07x	Pin7	NRESET_SX	Pin6	PA0
	Pin8	DIO0_SX	Pin26	PB4
	Pin9	DIO1_SX	Pin18	PA8
	Pin10	DIO2_SX	Pin15	PB1
	Pin11	DIO3_SX	Pin14	PB0
	Pin12	DIO4_SX	NC	NC
	Pin13	DIO5_SX	Pin7	PA1
	Pin16	SCK_SX	Pin11	PA5
	Pin17	MISO_SX	Pin12	PA6
	Pin18	MOSI_SX	Pin13	PA7
	Pin19	NSS_SX	Pin10	PA4

Table 4-2 RF control logic

	Pin Num/MCU	Description	Definition	Logic	Status
RF Switch Control	Pin27	PB5	Switch_CTL	0	TX ON
	Pin27	PB5	Switch_CTL	1	RX ON
	Pin27	PB5	Switch_CTL	0	Sleep

4.3 Interface of Module

Except that several essential GPIOs and one group of SPI would be used for internal transceiver control, all others GPIOs and interface of the MCU would be connected to external pins of the module, which includes USART, I2C, USB, ADC etc.

4.4 Reference design with WSL02-A0 Module

WSL02-A0 is integrated with LoRaWAN protocol and AT command. LoRaWAN node design with WSL02-A0 is very simple. Just connect the USART and NRST to their host MCU and send AT command.

Pin7 of the module could be used to show status of the modem. The LED1 would blink if uplink or downlink operates. Let it float if not used.

Pin8 of the module could be used to trigger the bootloader mode. It's useful to upgrade the FW of the AT command. Let it float if not used.

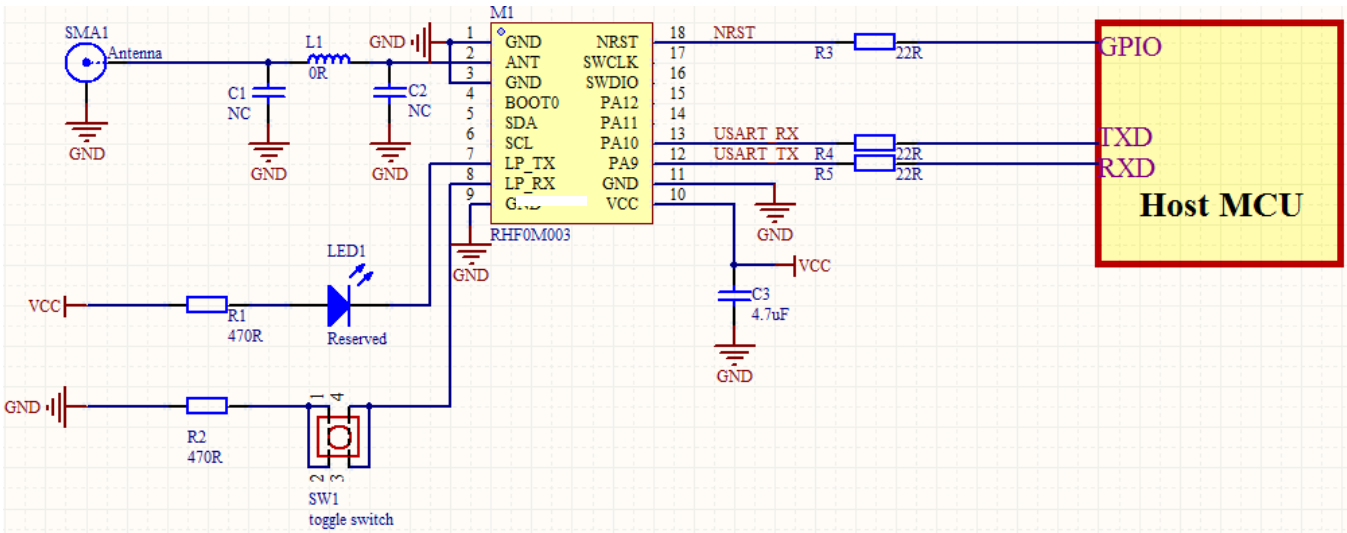

Figure 4-3 Reference design with WSL02-A0

5 Application in LoRaWAN

5.1 LoRaWAN

LoRaWAN networks typically are laid out in a star-of-stars topology in which gateways relay messages between end-devices and a central network server at the backend. Gateways are connected to the network server via standard IP connections while end devices use LoRa™ or FSK communication to one or many gateways. All communication is generally bi-directional, although uplink communication from an end device to the network server is expected to be the predominant traffic.

Communication between end-devices and gateways is spread out on different frequency channels and data rates. The selection of the data rate is a trade-off between communication range and message duration, communications with different data rates does not interfere with each other. LoRa data rates range from 0.3 kbps to 50 kbps, with different Band Width and Spreading Factor. To maximize both battery life of the end-devices and overall network capacity, the LoRa network infrastructure can manage the data rate and RF output for each end-device individually by means of an adaptive data rate (ADR) scheme.

End-devices may transmit on any channel available at any time, using any available data rate, as long as the following rules are respected:

1) The end-device changes channel in a pseudo-random fashion for every transmission. The resulting frequency diversity makes the system more robust to interferences.

2) The end-device respects the maximum transmit duty cycle relative to the sub-band used and local regulations.

The WSL02-A0 Module incorporates Semtech's LoRa Chip SX1276 and ST's ultra-low power MCU. With only 1.45uA sleep current in WOR mode, the module is really very suitable for LoRaWAN application.

5.2 LoRaWAN sensor with WSL02-A0

WSL02-A0 is AT command LoRaWAN modem, which is LoRaWAN protocol embedded. Customer just need use a simple host MCU with application to control the modem via UART that a LoRaWAN sensor could be designed easily. This will help customer to promote their sensor devices to market quickly.

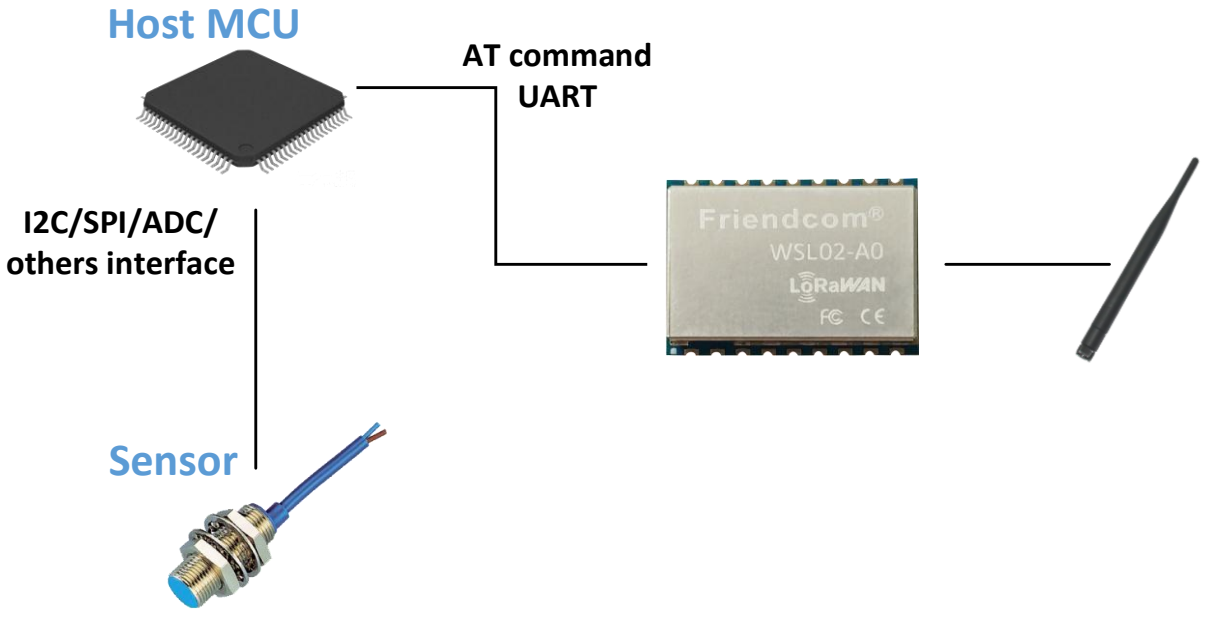

Figure 5-1 LoRaWAN sensor with WSL02-A0

This device complies with Part 15 of the FCC Rules. Operation is subject to the following two conditions:

(1) This device may not cause harmful interference.

(2) This device must accept any interference received, including interference that may cause undesired operation.

NOTE: This equipment has been tested and found to comply with the limits for a **Class B** digital device, pursuant to part 15 of the FCC Rules. These limits are designed to provide reasonable protection against harmful interference in a residential installation.

This equipment generates uses and can radiate radio frequency energy and, if not installed and used in accordance with the instructions, may cause harmful interference to radio communications. However, there is no guarantee that interference will not occur in a particular installation. If this equipment does cause harmful interference to radio or television reception, which can be determined by turning the equipment off and on, the user is encouraged to try to correct the interference by one or more of the following measures:

- Reorient or relocate the receiving antenna.
- Increase the separation between the equipment and receiver.
- Connect the equipment into an outlet on a circuit different from that to which the receiver is connected.
- Consult the dealer or an experienced radio/TV technician for help

NOTE: The manufacturer is not responsible for any radio or TV interference caused by unauthorized modifications to this equipment. Such modifications could void the user's authority to operate the equipment.

This equipment complies with FCC radiation exposure limits set forth for an uncontrolled environment. This equipment should be installed and operated with minimum distance of 20 cm between the radiator and your body. This transmitter must not be co-located or operating in conjunction with any other antenna or transmitter.

ORIGINAL EQUIPMENT MANUFACTURER (OEM) NOTES

The OEM must certify the final end product to comply with unintentional radiators before declaring compliance of the final product to Part 15 of the FCC rules and regulations. Integrationinto devices that are directly or indirectly connected to AC lines must add with Class II Permissive Change.

The OEM must comply with the FCC labeling requirements. If the module's label is not visible when installed, then an additional permanent label must be applied on the outside of the finished product which states:

“Contains transmitter module FCC ID: UU3WSL02. Additionally, the following statement should be included on the label and in the final product’s user manual: “This device complies with Part 15 of the FCC Rules.

Operation is subject to the following two conditions: (1) This device may not cause harmful interferences, and

(2) this device must accept any interference received, including interference that may cause undesired operation.”

The module is limited to installation in mobile or fixed applications. Separate approval is required for all other operating configurations, including portable configuration with respect to Part 2.1093 and different antenna configurations.

Professional installation:

This module need to be installed under professional guidance, if there is any questions, please contact us.

Host device: ST Nucleo LoRa sensor

Antenna information：Gain: -2dBi; Type: Dipole antenna; Impedance: 50Ω

The module can work on the host device, it means the driver is matched, different host devices have the different drives.

The host manufacturer can not get the module drive authorization to remain compliant, until the host device compliance with the requirements.

Note: The module has the antenna schematics, so the host device just provide the antenna connector for this device. The antenna port and connector is designed by OEM, it need to compliance with the 15.203 requirement, and it is not designed for use with high-gain directional antennas.

A module or modules can only be used without additional authorizations if they have been tested and granted under the same intended end-use operational conditions, including simultaneous transmission operations.

When they have not been tested and granted in this manner, additional testing and/or FCC application filing may be required. The most straightforward approach to address additional testing conditions is to have the grantee responsible for the certification of at least one of the modules submit a permissive change application.

When having a module grantee file a permissive change is not practical or feasible, the following guidance provides some additional options for host manufacturers. Integrations using modules where additional testing and/or FCC application filing(s) may be required are: (A) a module used in devices requiring additional RF exposure compliance information (e.g., MPE evaluation or SAR testing); (B) limited and/or split modules not meeting all of the module requirements; and (C) simultaneous transmissions for independent collocated transmitters not previously granted together.

This Module is limited modular approval, it is limited to OEM installation ONLY.

Integration into devices that are directly or indirectly connected to AC lines must add with Class II Permissive Change. (OEM) Integrator has to assure compliance of the entire end product incluld the integrated Module.

Additional measurements (15B) and/or equipment authorizations (e.g Verification) may need to be addressed depending on co-location or simultaneous transmission issues if applicable. (OEM) Integrator is reminded to assure that these installation instructions will not be made available to the end user of the final host device.