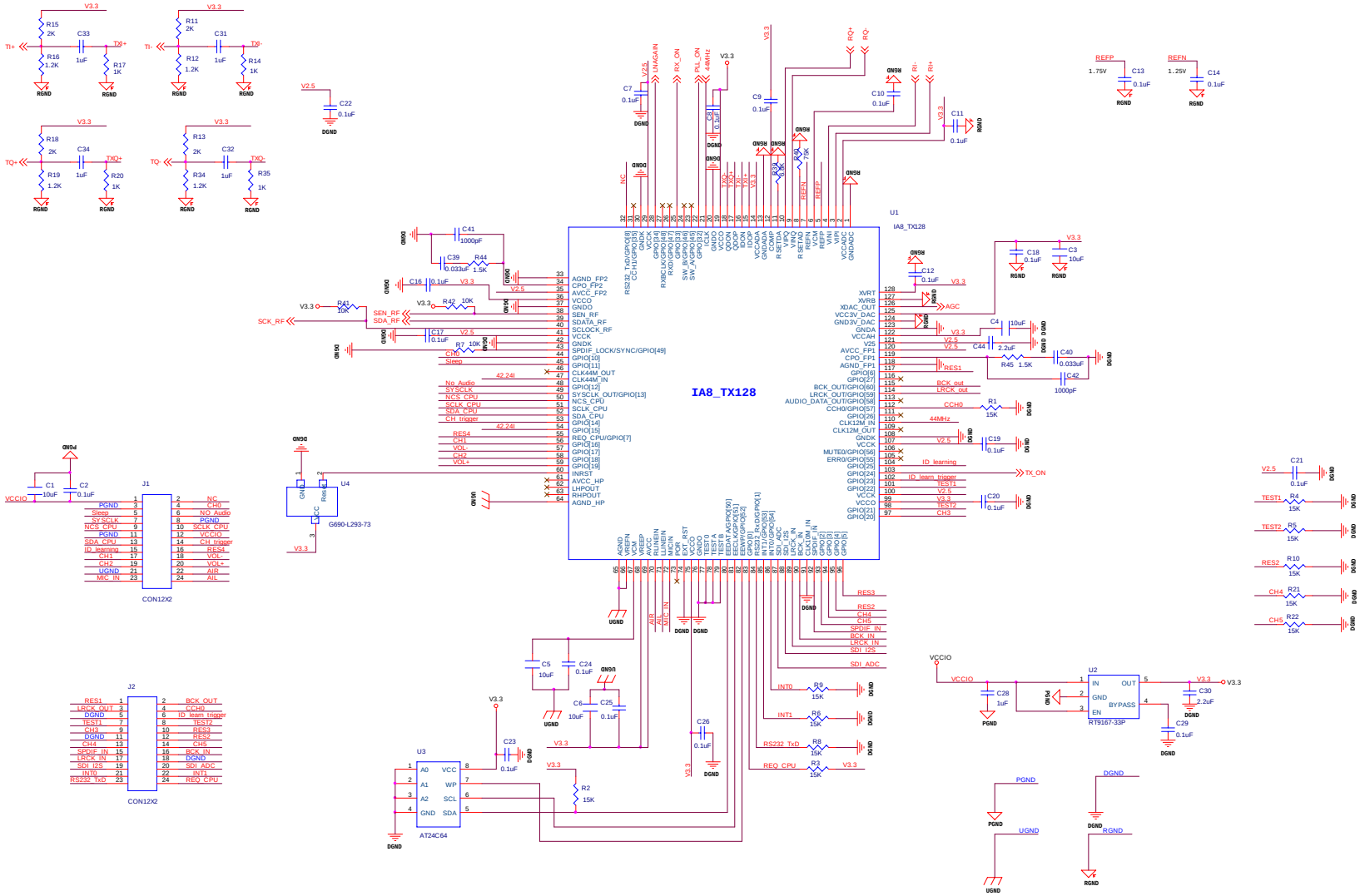
IA8_TX128
U1
U2
RT9167-33P
U3
AT24C64
U4
G690-L293-73
J1
CON12X2
J2
CON12X2

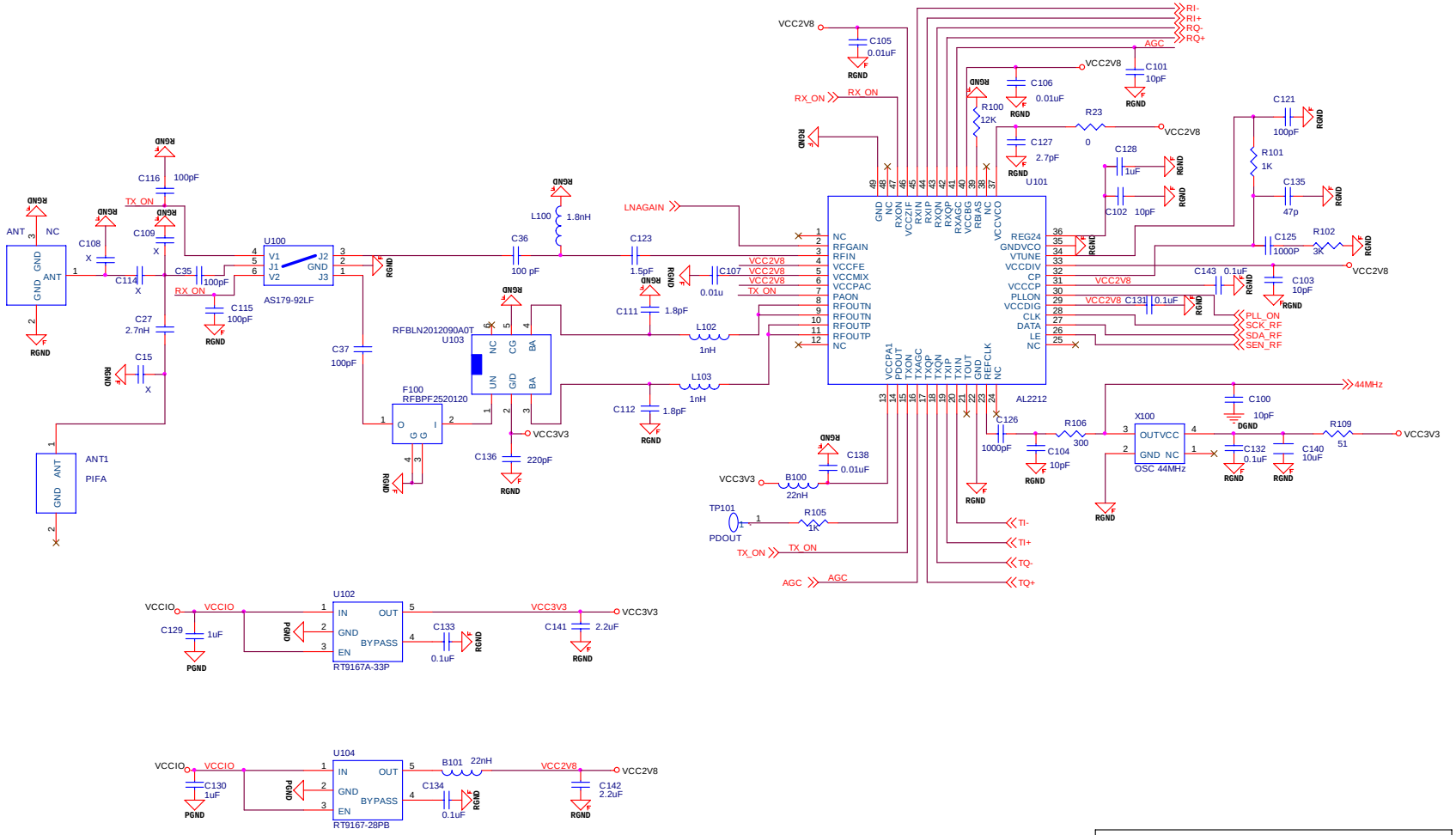

Title	<Title>		
Size B	Document Number <Doc>		Rev <RevCode>
Date: Saturday, August 12, 2006		Sheet 2 of 3	