QuarkUp

R1270

500mW UHF RFID Ultra Compact Module

R1270CEVB

Quark Up Reader Evaluation Board

easy2read©

PRELIMINARY

CAENRFID

Technical Information Manual

Revision n. 00

29/05/2014

Visit Quark Up R1270 web page and you will find the latest revision of data sheets, manuals, certifications, technical drawings, software and firmware.
All you need to start using your reader in a few clicks!

Scope of Manual

The goal of this manual is to provide the basic information to work with the **Quark Up R1270 500mW UHF RFID Ultra Compact Module**.

Change Document Record

Date	Revision	Changes	Pages
29 May 2014	00	Preliminary release	-

Reference Document

[RD1] EPCglobal: EPC Radio-Frequency Identity Protocols Class-1 Generation-2 UHF RFID Protocol for Communications at 860 MHz – 960 MHz, Version 1.1.0 (December 17, 2005).

CAEN RFID srl

Via Vetraia, 11 55049 Viareggio (LU) - ITALY
Tel. +39.0584.388.398 Fax +39.0584.388.959
info@caenrfid.com
www.caenrfid.com

© CAEN RFID srl – 2014

Disclaimer

No part of this manual may be reproduced in any form or by any means, electronic, mechanical, recording, or otherwise, without the prior written permission of CAEN RFID.

The information contained herein has been carefully checked and is believed to be accurate; however, no responsibility is assumed for inaccuracies. CAEN RFID reserves the right to modify its products specifications without giving any notice; for up to date information please visit www.caenrfid.com.

Preliminary Product Information

This document contains information for a new product. CAEN RFID reserves the right to modify this product without notice.

“Preliminary” product information describes products that are ready for production, but for which full characterization data is not yet available. CAEN RFID believes that the information contained in this document is accurate and reliable. However, the information is subject to change without notice and is provided “AS IS” without warranty of any kind (Express or implied). You are advised to obtain the latest version of relevant information to verify, before placing orders, that information being relied on is current and complete. All products are sold subject to the terms and conditions of sale supplied at the time of order acknowledgement, including those pertaining to warranty, patent infringement, and limitation of liability. No responsibility is assumed by CAEN RFID for the use of this information, including use of this information as the basis for manufacture or sale of any items, or for infringement of patents or other rights of third parties.

Federal Communications Commission (FCC) Notice (Preliminary)

This device was tested and found to comply with the limits set forth in Part 15 of the FCC Rules. Operation is subject to the following conditions: (1) this device may not cause harmful interference, and (2) this device must accept any interference received including interference that may cause undesired operation. These limits are designed to provide reasonable protection against harmful interference when the equipment is operated in a commercial environment.

This device generates, uses, and can radiate radio frequency energy. If not installed and used in accordance with the instruction manual, the product may cause harmful interference to radio communications. Operation of this product in a residential area is likely to cause harmful interference, in which case, the user is required to correct the interference at their own expense. The authority to operate this product is conditioned by the requirements that no modifications be made to the equipment unless the changes or modifications are expressly approved by CAEN RFID.

Disposal of the product

Do not dispose the product in municipal or household waste. Please check your local regulations for disposal/recycle of electronic products.

Index

Scope of Manual 2
Change Document Record 2
Reference Document 2
Index 4
List of Figures 5
List of Tables 5
1 Introduction 6
General Information 7
Reader 7
Evaluation Board 7
Accessories 8
R1270 Quark Up ReaderAccessories 8
R1270CEVB Quark Up Evaluation Board Accessories 8
Development Kit 9
Ordering Options 9
Installation Notice 10
2 Quark Up R1270 11
Technical Specifications Table 12
External Connections 13
R1270 supply and I/O connector electrical characteristics 15
Power supply connection 16
General purpose I/O connections 17
External reset 17
UART connection 18
USB connection 19
Antenna port specifications 19
Reader – Tag Link Profiles 20
Firmware Upgrade 20
BSL operation 20
Firmware upgrade via R1270CEVB board 21
PCB Pad Layout 23
3 Quark Up R1270CEVB 24
Technical Specifications Table 25
Connection diagram 25
Installation Notice 26
Technical drawings 26
Electrical scheme 27
External Connections 28
Installing the USB Virtual COM port driver 29
4 Quark Up Regulatory Compliance 30
FCC Compliance 31

List of Figures

Fig. 1.1: Quark Up R1270 500mW UHF RFID Ultra Compact Module 7
Fig. 1.2: Quark Up R1270CEVB - Quark-Up Reader Evaluation Board 7
Fig. 1.3: R1270CEVB Accessories 8
Fig. 1.4: R1270CXDK: R1270 - Development kit with reader, adapter, antennas, cable and demo tags 9
Fig. 1.5: Connection of the R1270CEVB to the Quark Up R1270 module 10
Fig. 2.1: Quark Up R1270 technical drawings 13
Fig. 2.2: Quark Up R1270 power supply connection 16
Fig. 2.3: Quark Up R1270 GPIO connection example 17
Fig. 2.4: Quark Up R1270 external reset 17
Fig. 2.5: Quark Up R1270 RS232 connection 18
Fig. 2.6: Quark Up R1270 USB connection 19
Fig. 2.7: BSL sequence 20
Fig. 2.8: PCB pad layout 23
Fig. 3.1: Quark Up R1270CEVB technical drawing 26
Fig. 3.2: Quark Up R1270CEVB electrical scheme 27
Fig. 3.3: Quark Up R1270CEVB SMT pads 28

List of Tables

Tab. 2.1: Quark Up R1270 Technical Specifications 12
Tab. 2.2: Quark Up R1270 connector pinout 14
Tab. 2.3: Quark Up R1270 supply and I/O connector electrical characteristics 16
Tab. 2.4: RF port pinout 19
Tab. 2.5: RF port electrical characteristics 19
Tab. 2.6: Quark Up R1270 reader to tag link profiles 20
Tab. 3.1: R1270CEVB - Quark-Up Reader Evaluation Board 25
Tab. 3.2: Quark Up R1270CEVB GPIO connector pinout 28
Tab. 3.3: Quark Up R1270CEVB SMT pads signals 28

1 Introduction

This Chapter gives general information about the **Quark Up R1270 500mW UHF RFID Ultra Compact Module**. It contains these topics:

- General Information
- Accessories
- Development Kit
- Ordering Options
- Installation Notice

General Information

Reader

The Quark-Up (Model R1270), OEM reader of the easy2read© Family, is an UHF multiregional ultra compact reader for low power, high performances UHF RFID applications.
With programmable output power in 18 steps from 10dBm to 27dBm, the reader can detect tags at more than 3 mt of distance (depending on antenna and tag dimensions).
Due to its low power consumption, the module is specifically designed to be easily integrated in battery powered devices.
The radio frequency core of the module permits to achieve fast reading and to be used in dense reader and dense tag environments for top-class rated performances.
The compactness of the device and the board-to-board connector allow to embed the R1270 inside the new small form factor industrial handhelds, smartphone accessories and other compact form factor devices.
The R1270 complies with and can operate in both European and US regulatory environments and due to its multiregional capabilities, it's ideal for integration in devices requiring compliance to different geographical regions.

Fig. 1.1: Quark Up R1270 500mW UHF RFID Ultra Compact Module

Evaluation Board

The R1270CEVB evaluation board allows to manage the R1270 Quark Up reader directly via USB interface. This board is particularly suited for Quark Up reader evaluation and SW development purposes.

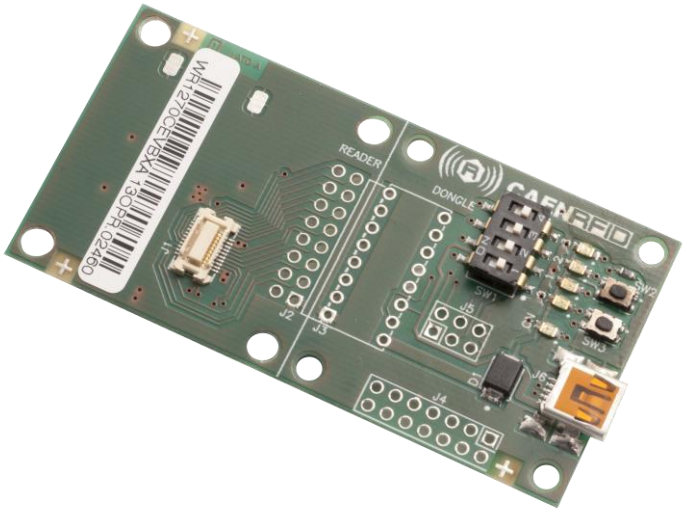

Fig. 1.2: Quark Up R1270CEVB - Quark-Up Reader Evaluation Board

Accessories

R1270 Quark Up ReaderAccessories

None.

R1270CEVB Quark Up Evaluation Board Accessories

Check for the supplied accessories below:

No. 1 USB cable

Fig. 1.3: R1270CEVB Accessories

Development Kit

R1270CXDK – 500mW UHF RFID Ultra Compact Module Development Kit is available:

Fig. 1.4: R1270CXDK: R1270 - Development kit with reader, adapter, antennas, cable and demo tags

The R1270 Quark Up reader development kit is a complete RFID set up, for a quick implementation of RFID solutions. It includes:

- n. 1 R1270 - 500mW UHF RFID Ultra Compact Module
- n. 1 R1270CEVB - Quark-Up Reader Evaluation Board
- n.1 Circular Polarized Quadrifilar Antenna U.FL ETSI
- n.1 Circular Polarized Quadrifilar Antenna U.FL FCC
- n. 1 Set of Labels
- n. 1 A927Z Temperature Logger Tag
- n. 1 RT0005 Temperature Logger Tag
- n. 1 USB cable

Ordering Options

	Code	Description
Reader	WR1270CXAAAA	R1270 - Ultra Compact Embedded UHF RFID Reader
Development kit	WR1270CXDKAA	R1270 - Development kit with reader, adapter, antennas, cable and demo tags
Accessories	WR1270CEVBXA	R1270CEVB - Quark-Up Reader Evaluation Board
	WANT020XAUFL	ANT020/UFL - Quad - Circular polarized quadrifilarantenna (ETSI) - U.FL
	WANT021XAUFL	ANT021/UFL - Quad - Circular polarized quadrifilarantenna (FCC) - U.FL

Installation Notice

The correct way to connect the Quark Up R1270 module to the evaluation board is shown in the following pictures:

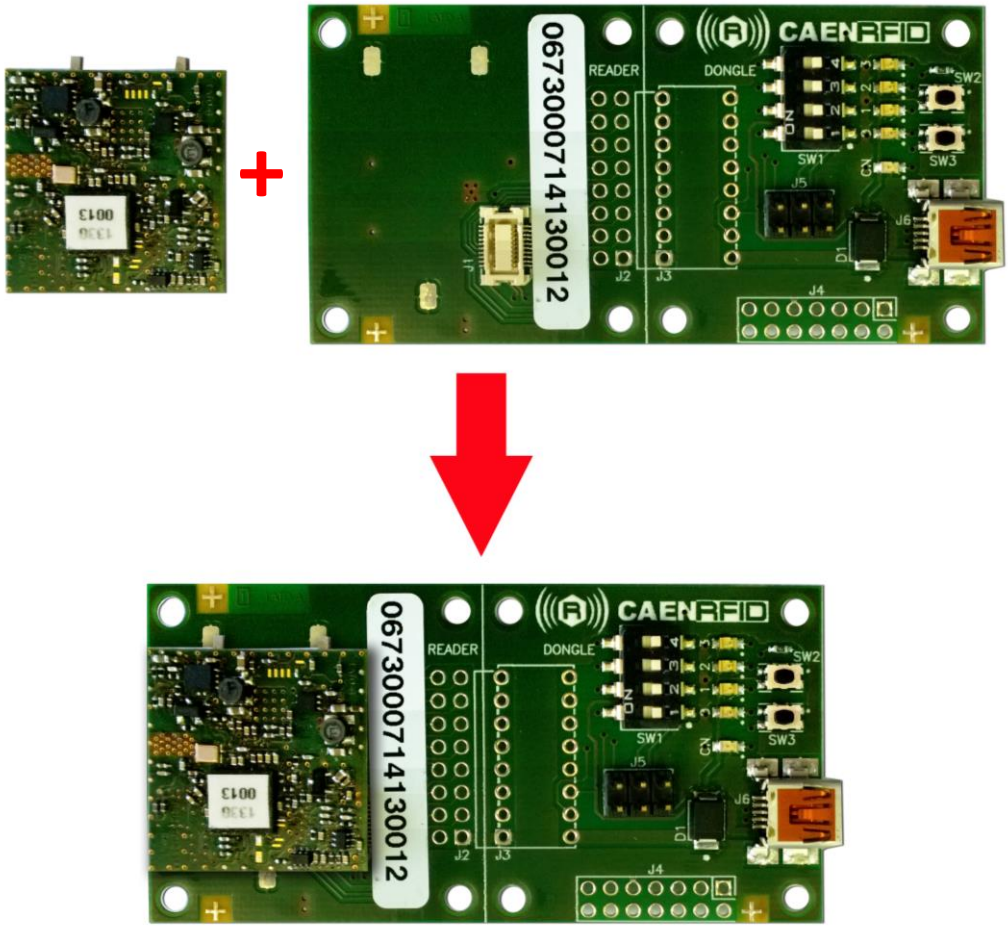

Fig. 1.5: Connection of the R1270CEVB to the Quark Up R1270 module

2 Quark Up R1270

This Chapter provides the basic information to work with the **Quark Up R1270 500mW UHF RFID Ultra Compact Module**. It contains these topics:

- Technical Specifications Table
- External Connections
- Reader – Tag Link Profiles
- Firmware Upgrade
- PCB Pad Layout

Technical Specifications Table

Frequency Band	902÷928 MHz (FCC part 15) 865.600÷867.600 MHz (ETSI EN 302 208)
RF Power	Programmable in 18 levels (1dB step) from 10dBm to 27dBm (from 10mW to 500mW) conducted
Output Power Accuracy	+/- 1dB
Antenna VSWR Requirement	2:1 or better for optimum performances
Antenna Connector	Nr. 1 U.FL type
Frequency Tolerance	±10 ppm over the entire temperature range
Number of Channels	4 channels (compliant to ETSI EN 302 208 v1.3.1) 50 hopping channels (compliant to FCC part 15.247).
Standard Compliance	EPC C1G2 [RD1]/ISO 18000-6C
Digital I/O	4 I/O lines (3.3V level; Iout=3mA max)
Connectivity	USB interface: One USB 2.0 Full Speed (12Mbit/s) device port UART Serial Port: Baudrate: up to 115200 Databits: 8 Stopbits: 1 Parity: none Flow control: none 3.3 V I/O Voltage Level
DC Power	5.0 VDC+/-5%
Power Consumption	2.7W @ RF out = 27dBm 1.6W @ RF out = 23dBm 0.15W in idle mode
Operating Temperature	-10 °C to +55 °C
Dimensions	(W)25 x (L)25 x (H)6 mm^3 (1.0 x 1.0 x 0.2 $inch^3$)
Weight	5 g

Tab. 2.1: Quark Up R1270 Technical Specifications

***Warning**: The RF settings must match the country/region of operating to comply with local laws and regulations.*

It is not allowed the use in different countries/regions from the one in which the device has been sold.

External Connections

The location of the connectors is shown in Fig. 2.1. Their mechanical specifications are listed below:

Antenna Port: U.FL female (P.N. HIROSE: U.FL-R-SMT-1(10)).

Supply and I/O connector: Molex P.N. 53748-0208 (mates with Molex 52991-0208 to be used on the host board).

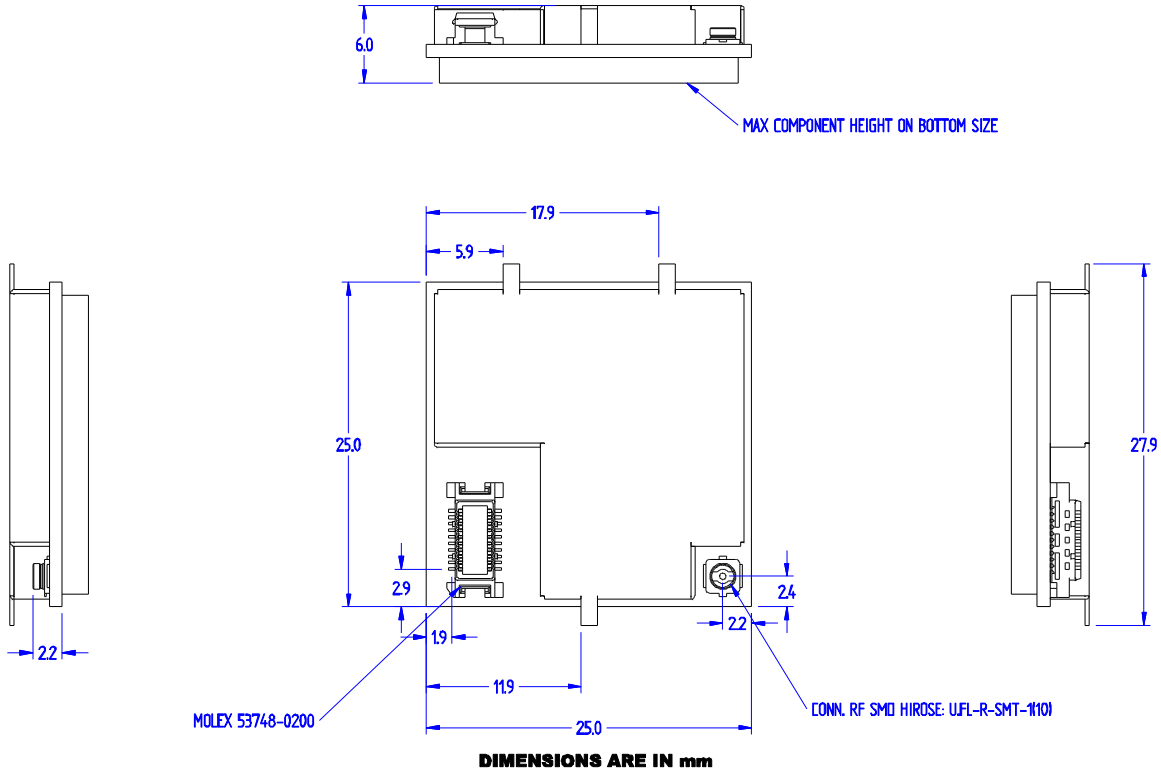

Fig. 2.1: Quark Up R1270 technical drawings

Supply and I/O connector pinout is shown in the following table[1]:

Pin #	Signal	Description
1	GND	Ground
2	TCK	TCK JTAG signal (debug purpose only)
3	GND	Ground
4	/RST	Reset
5	TXD	UART TX to host
6	TMS	TMS JTAG signal (debug purpose only)
7	RXD	UART RX from host
8	TDI	TDI JTAG signal (debug purpose only)
9	5V_USB	USB Vbus voltage
10	TDO	TDO JTAG signal (debug purpose only)
11	BSL_SEL	Bootloader interface selection
12	TST	TST JTAG signal (debug purpose only)
13	D+	USB data +
14	GPIO0	General Purpose IO #0
15	D-	USB data -
16	GPIO1	General Purpose IO #1
17	VIN	Input supply voltage
18	GPIO2	General Purpose IO #2
19	VIN	Input supply voltage
20	GPIO3	General Purpose IO #3

Tab. 2.2: Quark Up R1270 connector pinout

The GPIO0-GPIO3 pins are 4 general purpose bidirectional pins, their default direction at power up (or after a Reset) is input.

The reader can be controlled via UART or USB interface. The selection of the interface is performed internally to the module according to the following algorithm: if no interface has been previously selected and a high level signal is detected on the RXD pin, the UART interface is selected and the USB interface is disabled; on the contrary if no interface has been previously selected and RXD pin is at low level or left unconnected, the USB interface is selected and the UART interface is disabled. Please note that in case you want to switch between the two interfaces you have to reset the module.

For the USB interface a Virtual COM Port (VCP) is implemented.

To establish a link with the device using UART or VCP connection, you must configure your COM port as follows:

Baud rate: 115200

Parity: None

Data bits: 8

Stop bits: 1

Flow Control: none

JTAG pins, unless otherwise noted, are for internal debug purpose only and shall not be connected by the user.

/RST and BSL_SEL pins shall be properly driven to start the bootloader of R1270 embedded microcontroller in case the user wants to upgrade the firmware image of the reader. In normal operation BSL_SEL shall be at low level or left unconnected.

See § *BLS operation pag. 20* for the description of the bootloader operation.

[1] Debug purpose and unused pins should not be connected.

R1270 supply and I/O connector electrical characteristics[2]

Pin name	Pin No.	Parameter	Min	Type	Max	Unit
GND	1,3					
TCK	2	VIL	-0.3		0.75	V
		VIH	1.5		3.6	V
		Input current			10	µA
/RESET	4	VIL	-0.3		0.6	V
		VIH	1.65		3.6	V
		Internal pull-up resistance		47		kΩ
		Pulse width	10			µs
TXD	5	VOL	0		0.55	V
		VOH	2.5		3.5	V
		Output current			3.0	mA
TMS	6	VIL	-0.3		0.75	V
		VIH	1.5		3.6	V
		Input current			10	µA
RXD	7	VIL	-0.3		0.75	V
		VIH	1.5		3.6	V
		Input current			10	µA
TDI	8	VIL	-0.3		0.75	V
		VIH	1.5		3.6	V
		Input current			10	µA
5V_USB	9	Input DC voltage	4.75	5.00	5.25	V
		Input current			20	mA
TDO	10	VOL	0		0.55	V
		VOH	2.5		3.5	V
		Output current			3.0	µA
BSL_SEL	11	VIL	-0.3		1.0	V
		VIH	2.2		3.6	V
		Internal pull-down resistance		10		kΩ
TST	12	VIL	-0.3		0.75	V
		VIH	1.5		3.6	V
		Internal pull-down resistance	45			kΩ
D+,D-	13,15	VOL	0		0.3	V
		VOH	2.8		3.6	V
		Impedance	28		44	Ω
GPIO[0:3]	14, 16, 18, 20	VOL	0		0.55	V
		VOH	2.5		3.5	V
		Output current			3.0	mA
		VIL	-0.3		0.75	V
		VIH	1.5		3.6	V
		Input current			10	µA

[2] Exceeding maximum values reported in the table may cause permanent damage to the model.

Pin name	Pin No.	Parameter	Min	Type	Max	Unit
VIN[3]	17,19	Input supply voltage	4.75	5.00	5.25	V
		Supply current (idle)			30	mA
		Supply current (RF ON @ 23dBm)			0.32	A
		Supply current (RF ON @ 27dBm)			0.55	A

Tab. 2.3: Quark Up R1270 supply and I/O connector electrical characteristics

Power supply connection

In the following schematic suggested R1270 power supply connection is shown.

An external 100uF bypass capacitor between Vin and GND is recommended for proper operation.

The use of fuse F1 (or an equivalent solid state current limiter) is recommended since R1270 doesn't provide internal current limitation protection.

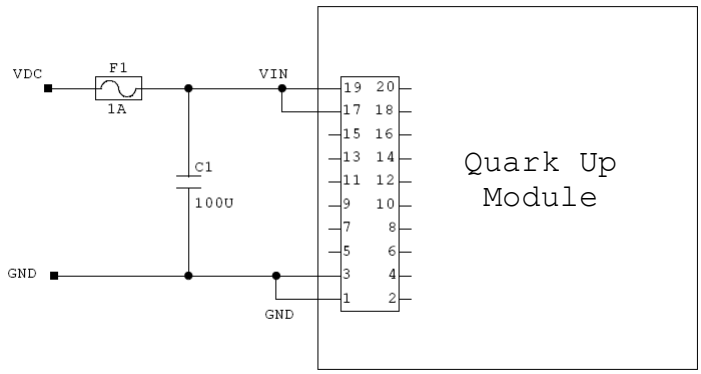

Fig. 2.2: Quark Up R1270 power supply connection

[3] External 100uF bypass capacitor between Vin and GND is recommended for proper operation.

General purpose I/O connections

The GPIO0-GPIO3 pins are 4 general-purpose bidirectional pins. Their default direction after a power on reset or a general reset is set to input.

GPIO, when configured as Outputs, can be used to drive indicators as leds or buzzers or to send trigger signal to others equipments.

GPIO, when configured as Inputs, can accept control signals from other equipments or trigger signals from sensors (i.e. photocells).

In the following schematic an example of application of GPIO is shown.

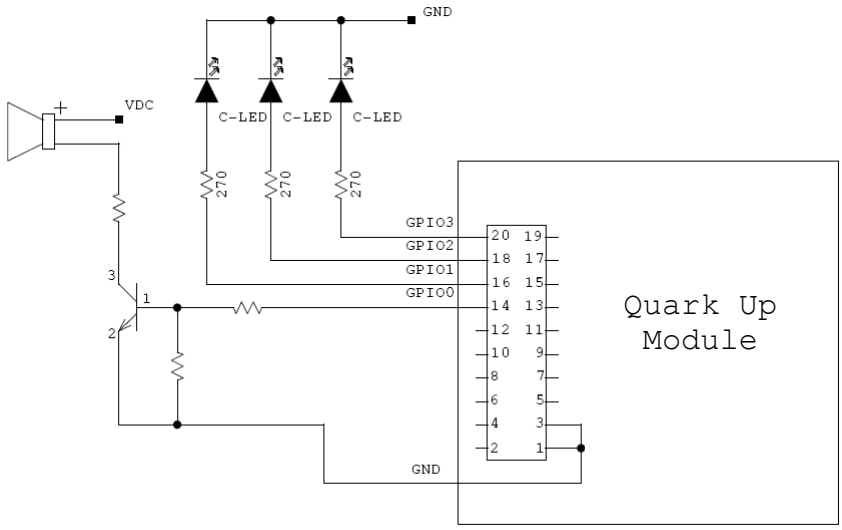

Fig. 2.3: Quark Up R1270 GPIO connection example

External reset

R1270 manual reset can be performed by forcing at low level /RESET pin for 10µs at least. /RESET pin is pulled-up by an internal resistor.

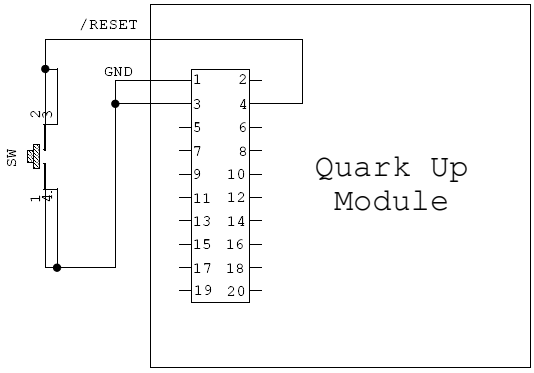

Fig. 2.4: Quark Up R1270 external reset

UART connection

The RXD/TXD pins are used to communicate with the R1270 board via UART port. Since Quark Up RX/TX are TTL level signals, in order to connect it with a PC, a TTL/RS232 translator shall be used (please refer to the diagram below).

To establish a link with the device, the host COM port shall be configured as follows:

Baud rate:	115200
Parity:	None
Data bits:	8
Stop bits:	1
Flow Control:	none

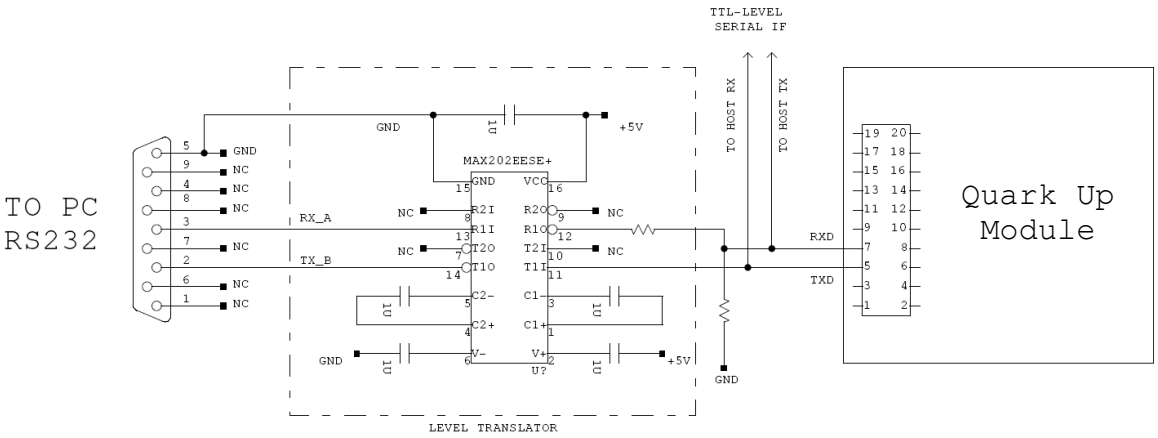

Fig. 2.5: Quark Up R1270 RS232 connection

USB connection

In the following image the connection between R1270 module and USB interface is shown.

Since the maximum supply current for the reader exceeds the USB limitation (500mA), the supply voltage shall be provided via an external power source or via a dual USB cable.

The 5V_USB signal at pin 9 of reader connector is not intended to supply the module but is used by the reader to detect the presence of an USB host.

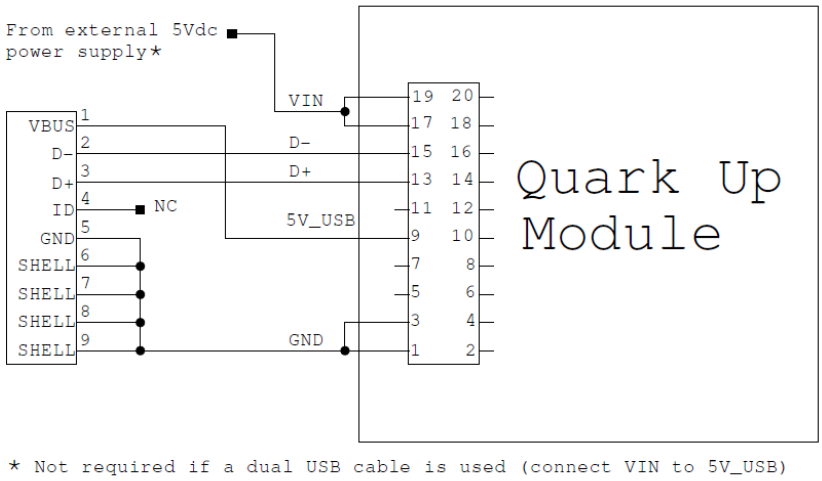

Fig. 2.6: Quark Up R1270 USB connection

A Virtual COM Port is implemented, in order to establish a link with the device, the host COM port shall be configured as follows:

Baud rate:	115200
Parity:	None
Data bits:	8
Stop bits:	1
Flow Control:	none

The VID/PID combination that identifies the USB device is:

VID: 21E1

PID: 0080

Antenna port specifications

In the following table the pinout of R1270 antenna is shown.

Pin #	Function	Direction	Description
INNER	RF OUT	OUT	RF output
OUTER	GND	-	Ground

Tab. 2.4: RF port pinout

Parameter	Min	Typ.	Max	Unit
RF output power	10		500	mW
	10		27	dBm
Output power vs. power setting accuracy			± 1	dB
RF port impedance		50		Ω
Recommended antenna VSWR			2:1	-

Tab. 2.5: RF port electrical characteristics

Reader – Tag Link Profiles

Quark Up reader supports different modulation and return link profiles according to EPC Class1 Gen2 protocol.

In the following table are reported all profiles that have been tested for the compliance with ETSI and FCC regulations.

Link profile #	Regulation	Modulation	Return Link
0	ETSI - FCC	PR–ASK; f=40kHz	FM0; f = 40kHz
1	ETSI - FCC	PR–ASK; f=40kHz	Miller (M=4); f = 256kHz[4]
2	ETSI - FCC	PR–ASK; f=40kHz	Miller (M=4); f = 320kHz

Tab. 2.6: Quark Up R1270 reader to tag link profiles

Firmware Upgrade

Quark Up reader firmware upgrade is based on Boot Start Loader (BSL) of the embedded microcontroller inside the module.

An upgrade software has been developed to be used with Quark Up evaluation board (mod. R1270CEVB).

BSL operation

In order to start the BSL of Quark Up internal microcontroller /RST and BSL_SEL signal shall be driven as in the picture below:

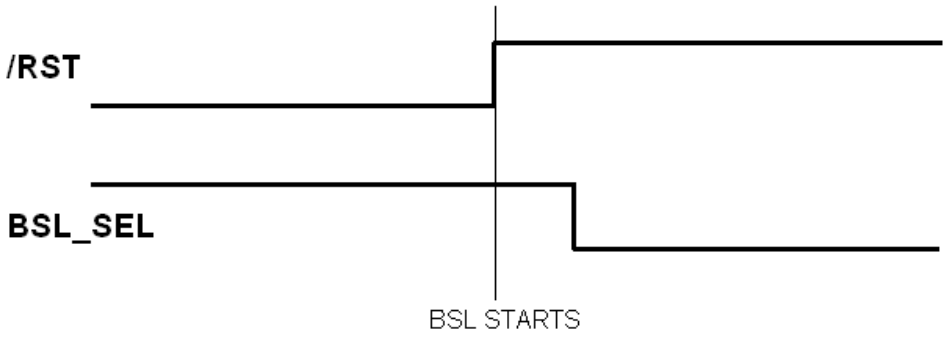

Fig. 2.7: BSL sequence

The BSL program execution starts if after a reset (or at power up) the BSL_SEL pin is at high level for at least 100ms.

The selected interface for upgrade operation is the USB and the protocol applied is defined as:

- HID protocol with one input endpoint and one output endpoint. Each endpoint has a length of 64 bytes.
- VID: 0x2047
- PID: 0x0200

[4] Default value.

Firmware upgrade via R1270CEVB board

Quark Up firmware upgrade can be managed via USB by using the evaluation board (mod.R1270CEVB) and the SW upgrade program. The Quark Up Upgrade Tool is available for free at *Quark Up R1270 web page* of the CAEN RFID Web Site, SW/FW section.

In order to upgrade the firmware follow the steps described below:

1. Connect to the USB port the evaluation board with the Quark Up reader installed.
2. Press the reset switch on the evaluation board (SW3).
3. With SW3 pressed, press the BSL_SEL switch on the evaluation board (SW2).
4. Release SW3.
5. Release SW2 within 1s respect to SW3.
6. Open the FW upgrade program.
7. Click on Next button.

8. In the window you will see the message “Found 1 device” (if the message is “No device connected” repeat the points 2,3, 4 and 5).

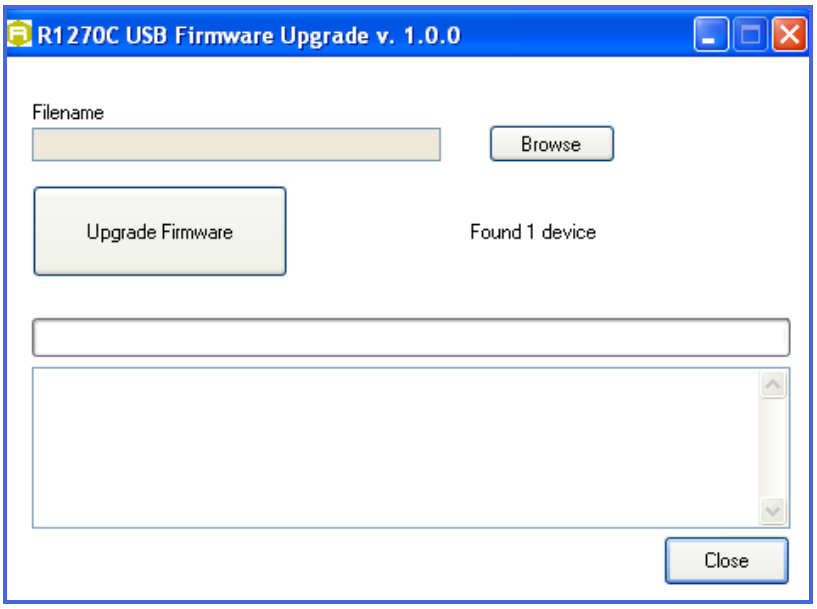

9. Select the FW image file by clicking on “Browse” button.
10. Click on “Upgrade Firmware” button and wait for the upgrade to be completed.
11. At the end of procedure, if the upgrade has been successfully performed, you will see the messages reported in the image below and the module is ready for normal operation.

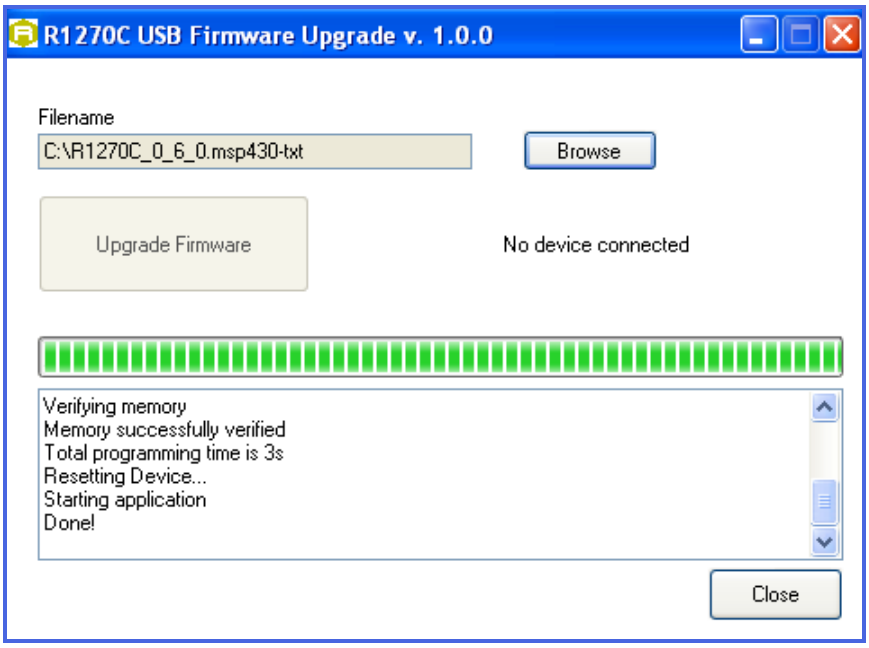

PCB Pad Layout

In the picture below the recommended PCB pad layout to be implemented on the user host board is shown. The 3 square pads shall be used to solder R1270 shield and shall be connected to ground. In addition it is shown the position and the layout required for Molex 52991-0208 connector, which mates with R1270 supply and I/O connector, and which shall be soldered on the host board.

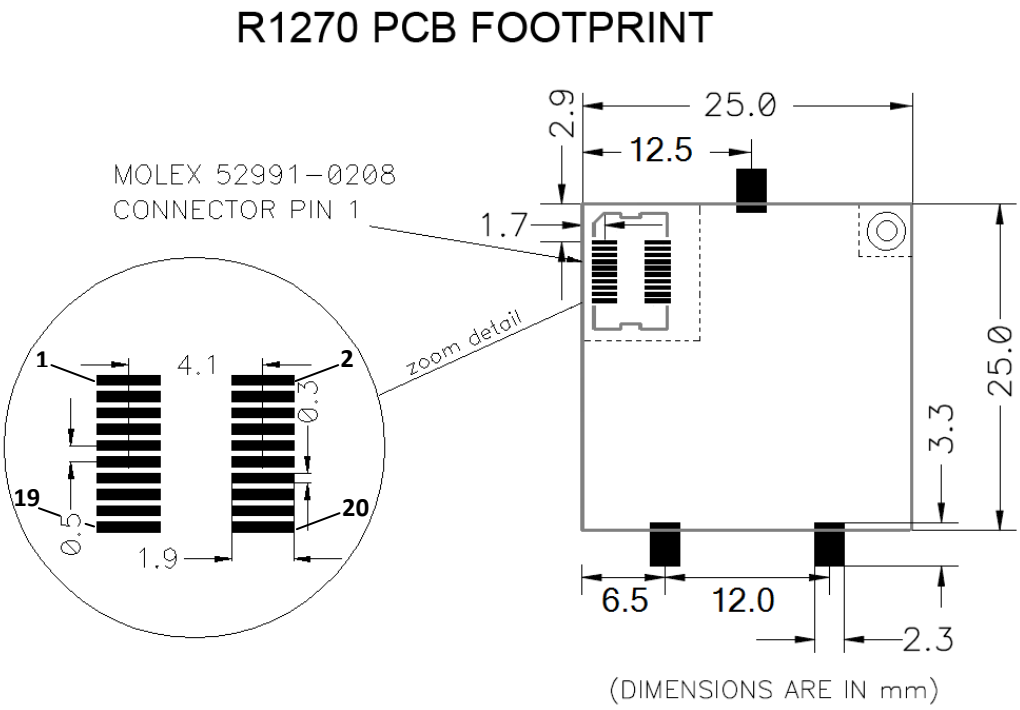

Fig. 2.8: PCB pad layout

3 Quark Up R1270CEVB

This Chapter provides the basic information to work with the **Quark Up R1270CEVB Evaluation Board**. It contains these topics:

- Technical Specifications Table
- Connection diagram
- Installation Notice
- Technical drawings
- Electrical scheme
- External Connections
- Installing the USB Virtual COM port driver

Technical Specifications Table

Switch	SW1= GPIO SW2= BSL_SEL SW3= RESET
USB Port	Mini USB Type A plug connector Bus powered USB 2.0 device Must be connected to two High-power Port (500 mA @ VBUS) with a dual USB cable. It appears as USB serial port Virtual Com Port (VCP) [5] drivers for Windows XP/Vista/Seven (7) Baudrate: 115200 Databits: 8 Stopbits: 1 Parity: none Flow control: none
User Interface	Red LED: Power Green LED: GPIO[0..3].
Dimensions	(W)38.0 x (L)76.0 x (H)12.0 mm^3 (1.5 x 3.0 x 0.5 $inch^3$)
Electrical Power	DC Voltage 5V +/-5% Max 800 mA[6]
Operating Temperature	-10 °C to +55 °C

Tab. 3.1: R1270CEVB - Quark-Up Reader Evaluation Board

Connection diagram

The following block diagram shows how to connect the Mod. R1270 with the PC host via the Mod. R1270CEVB evaluation board.

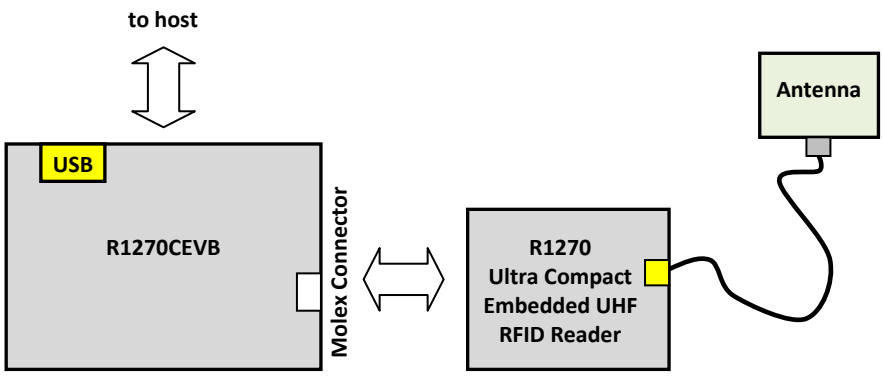

[5] You can download VCP drivers for Windows based systems from the CAEN RFID Web Site at *Quark Up R1270 page*.

[6] With Quark Up reader operating.

Installation Notice

Refer to § *Installation Notice* pag. 10 for the correct way to connect the Quark Up R1270 module to the evaluation board.

Technical drawings

The location of the connectors is shown in Fig. 3.1. Their mechanical specifications are listed below.

All dimensions are in millimeters.

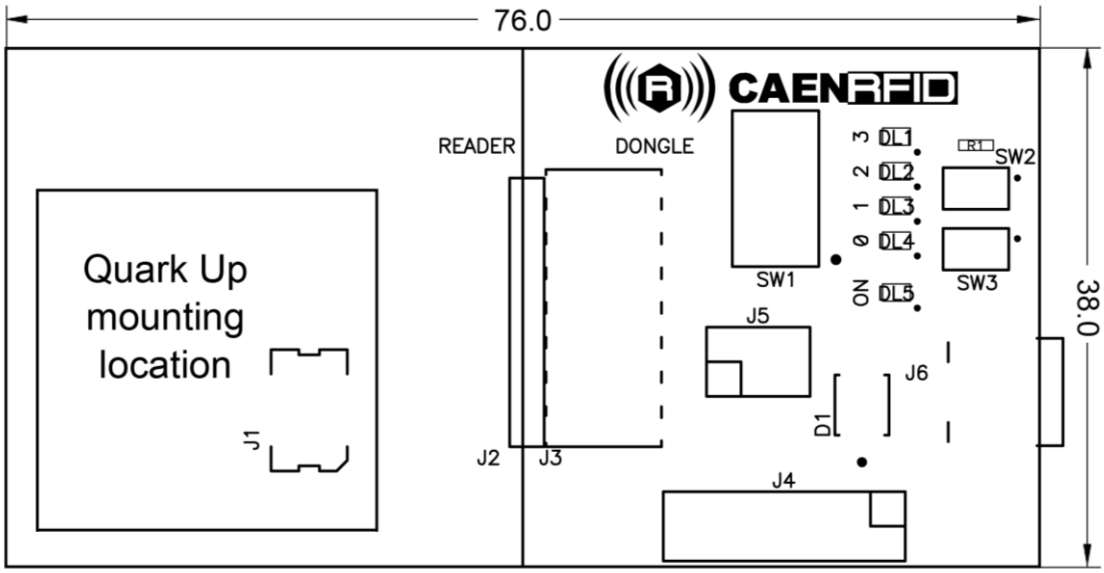

Fig. 3.1: Quark Up R1270CEVB technical drawing

Electrical scheme

The electrical scheme of the Quark Up R1270CEVB is shown in *Fig. 3.2: Quark Up R1270CEVB electrical* scheme.

The board hosts an embedded DC/DC boost converter that is used to compensate voltage drop across USB cable. This circuit can be used as a reference design for standard 3.7V battery applications.

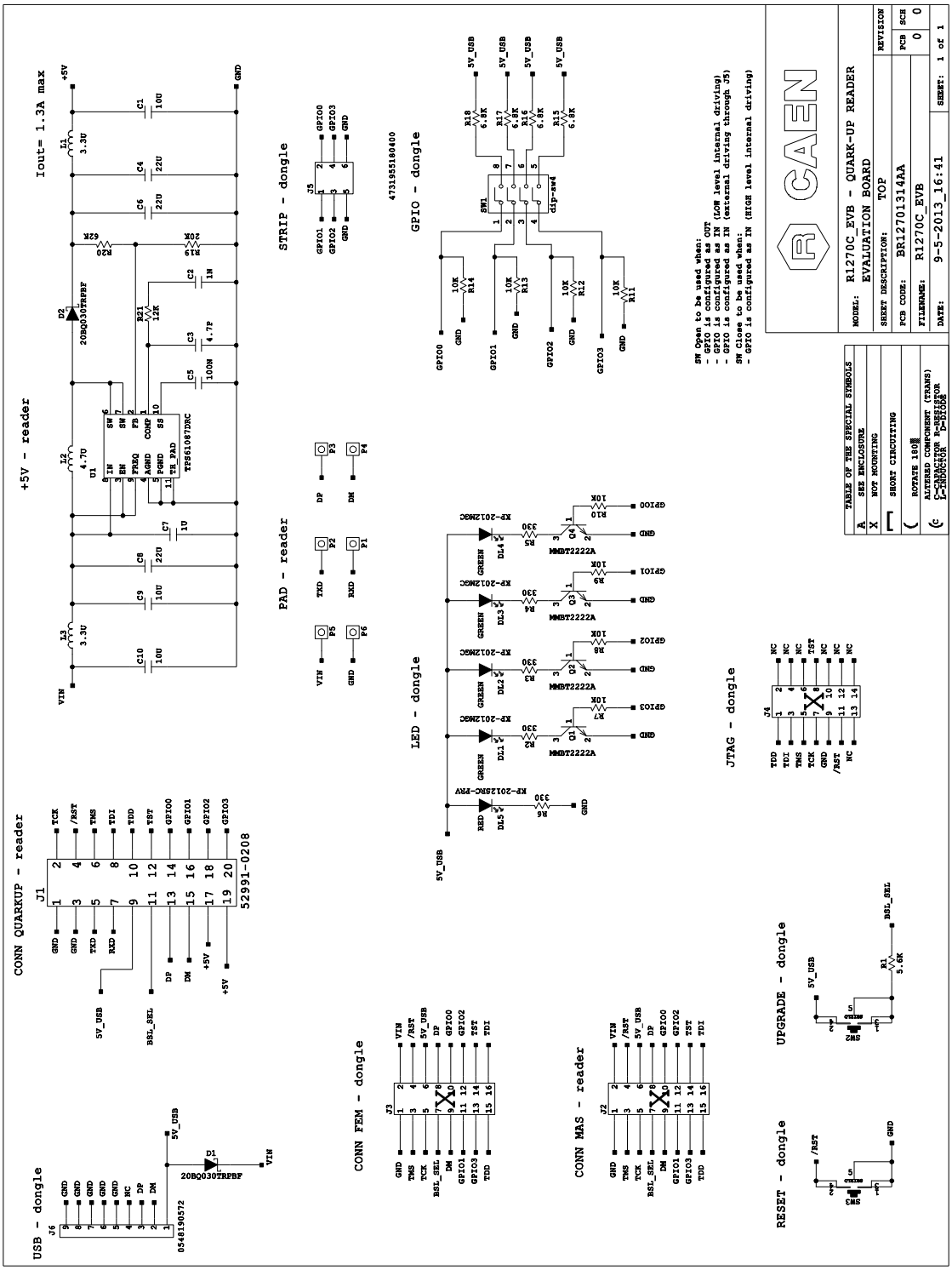

Fig. 3.2: Quark Up R1270CEVB electrical scheme

External Connections

GPIO connector pinout (J5) is shown in the following table:

Pin #	Signal
1	GPIO 1
2	GPIO 0
3	GPIO 2
4	GPIO 3
5	GND
6	GND

Tab. 3.2: Quark Up R1270CEVB GPIO connector pinout

J4 (not populated) is the JTAG connector for internal debug purposes and shall not be used.

In case an OEM manufacturer wants to connect the module to its own device for testing purposes, SMT pads are present on the bottom side of the board for power supply, UART and USB signals.

Pad #	Signal
P1	RXD
P2	TXD
P3	D+
P4	D-
P5	Vin (2.5Vdc ÷ 4.5Vdc)
P6	GND

Tab. 3.3: Quark Up R1270CEVB SMT pads signals

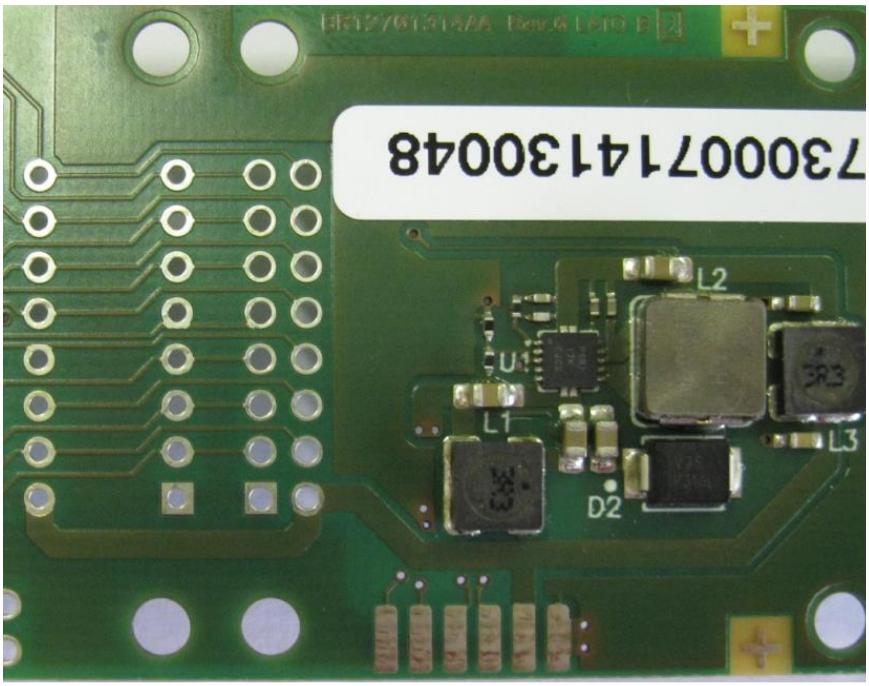

P1 P2 P3 P4 P5 P6

Fig. 3.3: Quark Up R1270CEVB SMT pads

Installing the USB Virtual COM port driver

Connect the Quark Up R1270 reader to the evaluation board (see § *Installation Notice* pag. 10) and then to a PC using the provided USB cable.

A dialog window appears informing you that the device is not recognized and you should be prompted for inserting the *R1270 Quark Up USB driver* (download the driver at *Quark Up R1270 web page*, *SW/FW* section) in order to correctly operate with the reader.

After installing the driver, the reader is detected by the PC as an emulated serial port (VCP):

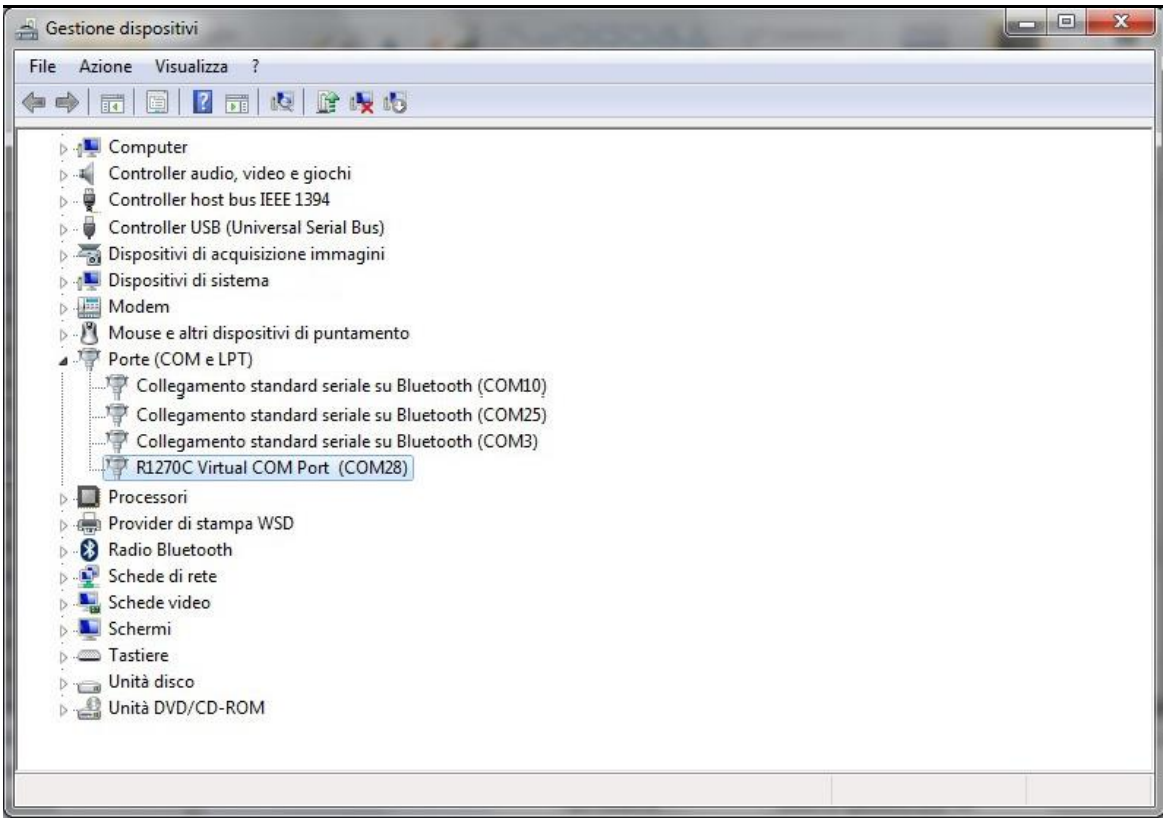

4 Quark Up Regulatory Compliance

This Chapter gives information on the **Quark R1230CB Reader** Regulatory Compliance. It contains these topics:

- FCC Compliance

FCC Compliance

This equipment has been tested and found to comply with Part 15 of the FCC Rules.

NOTE:

a. Any changes or modification not approved by CAEN RFID could void the user's authority to operate the equipment.

b. The Quark Up R1270 Module, which is rated at 500 mW output, is approved for operation with the QUAD - Circular Polarized Quadrifilar Antenna (CAEN RFID mod. WANTENNAX010) with 0.7dBi gain.
Use of other than the approved antennas with this unit may result in harmful interference with other users, and cause the unit to fail to meet regulatory requirements.

c. This transmitter module is authorized to be used in other devices only by OEM integrators under the following conditions:

    1. The RFID Module antenna shall have a separation distance of at least 20 cm from all persons

    2. The transmitter module must not be co-located with any other antenna or transmitter

d. In case that the two conditions above are met, further transmitter testing will not be necessary. However, the OEM integrator is still responsible for testing the end-product for any additional compliance requirements required with this module installed (for example, digital device emissions, PC peripheral requirements, etc.). In the event that these conditions can not be met (for certain configurations or co-location with another transmitter), then the FCC authorization is no longer considered valid and the FCC ID can not be used on the final product. In such case the OEM integrator will be responsible for re-evaluating the end product (including the transmitter) and obtaining a separate FCC authorization.

e. If the FCC ID is not visible when the module is installed inside another device, the OEM integrator shall apply a label in a visible area on his product with the following statement:

Contains Transmitter Module FCC ID: UVECAENRFID015

or

Contains FCC ID: UVECAENRFID015

f. The OEM integrator has to be aware not to provide information to the end user regarding how to install or remove this RF module or change RF related parameters in the user manual of the end product.