Compliance Information

FCC Information
This device complies with Part 15 of the FCC Rules.

Caution: Any changes or modifications not expressly approved could void the user's authority to operate the equipment.

Note: This equipment has been tested and found to comply with the limits for a Class B digital device, pursuant to part 15 of the FCC Rules. These limits are designed to provide reasonable protection against harmful interference in a residential installation. This equipment generates, uses and can radiate radio frequency energy and, if not installed and used in accordance with the instructions, may cause harmful interference to radio communications. However, there is no guarantee that interference will not occur in a particular installation. If this equipment does cause harmful interference to radio or television reception, which can be determined by turning the equipment off and on, the user is encouraged to try to correct the interference by one or more of the following measures:
– Reorient or relocate the receiving antenna.
– Increase the separation between the equipment and receiver.
– Connect the equipment into an outlet on a circuit different from that to which the receiver is connected.
– Consult the dealer or an experienced radio/TV technician for help.

Radiation Exposure Information
The device has been evaluated to meet general RF exposure requirement. The device can be used in portable exposure condition without restriction.

WARNING Li-ion Battery Inside
This product is fitted with a Li-ion battery. Do not damage, open, or dismantle the battery and do not use it in damp and/or corrosive conditions. Use only with compatible chargers. Never dispose of batteries in a fire, and never expose them to high temperatures. Do not expose the product to temperatures exceeding 60°C (140°F).

RECYCLE
RBRC
Li-ion
1.800.822.8837

Rating Label Definitions

Direct current symbol.

This symbol signifies the product must not be discarded as household waste, and should be delivered to an appropriate collection facility for recycling. Proper disposal and recycling helps protect natural resources, human health and the environment.

BC This symbol signifies and declares that this equipment has battery charging which complies with California CEC and energy efficiency.

Bluetooth This symbol signifies that this is a wireless device powered by Bluetooth® technology. The Bluetooth® word mark and logos are registered trademarks owned by Bluetooth SIG, Inc.

Warranty Information

Territory: United States/Canada

LIMITED WARRANTY TO ORIGINAL CONSUMER
This product (including any accessories included in the original packaging) as supplied and distributed new by an authorized retailer is warranted by Southern Telecom, Inc. to the original consumer purchaser against defects in materials and workmanship ("Warranty") as follows:

To obtain warranty service:
- Visit our website at **www.southerntelecom.com**
- Click on ***Product Support***
- Select the ***Brand*** of your device
- Select ***Service Request*** and fill out the form to begin your inquiry

Your product will be repaired or replaced, at our option, for the same or similar model of equal value if examination by the service center determines this product is defective. Products received damaged as a result of shipping will require you to file a claim with the carrier.

Warranty service not provided
This warranty does not cover damage resulting from accident, misuse, abuse, improper installation or operation, lack of reasonable care, unauthorized modification including software modifications such as the installation of custom firmware. This warranty is voided in the event any unauthorized person opens, alters or repairs this product. All products being returned to the authorized service center for repair must be suitably packaged.

NO WARRANTIES, WHETHER EXPRESS OR IMPLIED, INCLUDING, BUT NOT LIMITED TO, ANY IMPLIED WARRANTIES OF MERCHANTABILITY OR FITNESS FOR A PARTICULAR PURPOSE, OTHER THAN THOSE EXPRESSLY DESCRIBED ABOVE SHALL APPLY. DISTRIBUTOR FURTHER DISCLAIMS ALL WARRANTIES AFTER THE EXPRESS WARRANTY PERIOD STATED ABOVE. NO OTHER EXPRESS WARRANTY OR GUARANTY GIVEN BY ANY PERSON, FIRM OR ENTITY WITH RESPECT TO THE PRODUCT SHALL BE BINDING ON DISTRIBUTOR. REPAIR, REPLACEMENT, OR REFUND OF THE ORIGINAL PURCHASE PRICE - AT DISTRIBUTOR'S SOLE DISCRETION - ARE THE EXCLUSIVE REMEDIES OF THE CONSUMER. IN NO EVENT WILL DISTRIBUTOR OR ITS MANUFACTURERS BE LIABLE FOR ANY INCIDENTAL, DIRECT, INDIRECT, SPECIAL, PUNITIVE OR CONSEQUENTIAL DAMAGES (SUCH AS, BUT NOT LIMITED TO, DAMAGES FOR LOSS OF PROFITS, BUSINESS, SAVINGS, DATA OR RECORDS) CAUSED BY THE USE, MISUSE OR INABILITY TO USE THE PRODUCT. EXCEPT AS STATED HEREIN, NO OTHER WARRANTIES SHALL APPLY. NOTWITHSTANDING THE FOREGOING, CONSUMER'S RECOVERY AGAINST DISTRIBUTOR SHALL NOT EXCEED THE PURCHASE PRICE OF THE PRODUCT SOLD BY DISTRIBUTOR. THIS WARRANTY SHALL NOT EXTEND TO ANYONE OTHER THAN THE ORIGINAL CONSUMER WHO PURCHASED THE PRODUCT AND IS NOT TRANSFERABLE.

Some countries, states or provinces do not allow the exclusion or limitation of incidental or consequential damages or allow limitations on warranties, so limitation or exclusions may not apply to you. This warranty gives you specific legal rights, and you may have other rights that vary from state to state or province to province. Contact your authorized retailer to determine if another warranty applies.

SHARPER IMAGE®

2019 Sharper Image® name and logo are registered trademarks. Manufactured, marketed, and distributed under license by Southern Telecom, Inc. Brooklyn, NY 11220.
© Sharper Image. All Rights Reserved.

All product names, trademarks, and registered trademarks are property of their respective owners. All company, product, and service names used in this document are for identification purposes only. Use of these names, trademarks, and brands does not imply endorsement.

Printed in China
Designed in USA
v1. 04-2019

SHARPER IMAGE®

ANC Wireless Headphone
M4ANC

FCC ID:UWO-M4ANC

Instruction Manual

Before You Begin...

READ CAREFULLY AND KEEP THIS MANUAL

CAUTION

- **THIS IS NOT A TOY, Please keep away from children and pets**
- Keep away from water and extreme temperatures
- Low power may cause poor Bluetooth connection or sound distortion
- Do not overcharge the battery
- Do not expose the unit to extreme temperatures (heat or cold), open flames, humid conditions, or wet conditions.
- **Do not submerge in water**.
- Do not open this product or attempt to repair the unit yourself should it not be working.

Safety Warnings

- Do NOT use the headphones with the ANC (noise cancelling) on, or listen on high volume, at any time that the inability to hear surrounding sounds may present a danger to yourself or others, such as while riding a bicycle or walking near traffic, a construction site, railroad crossing, etc.
- Do NOT use the headphones at a high volume for any extended period.
- Do NOT use your headphones while driving for phone calls or any other purpose.

Questions & Customer Support

For questions, troubleshooting or any other assistance, please visit our website at **SouthernTelecom.com** and click on **Product Support**.

In the Box

- SNC300 - **Wireless Headphones**
- USB Charging Cable
- Instruction Manual

Location of Controls

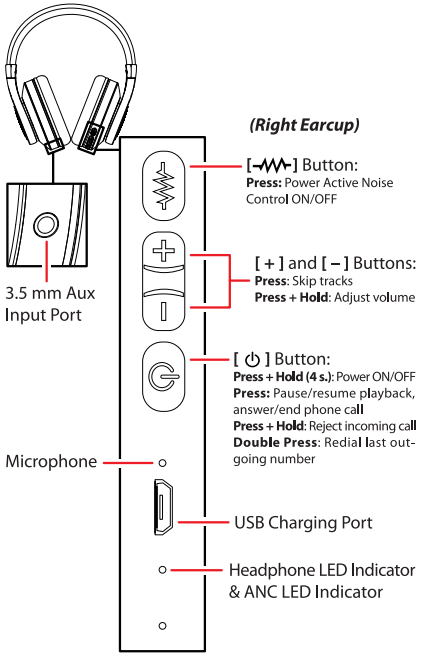

Getting Started

Charging the Headphones

Insert the small connector of the supplied micro-USB cable into the USB charging port on the bottom of the right earcup. Insert the large connector into the USB port on a computer, a USB charging device, or a **5V USB adapter** *(not included)* and plug into a wall socket.

The headphone LED indicator will turn ***RED*** while charging and turn ***BLUE*** when fully charged. On low battery, a voice will be periodically heard, indicating that the headphones need to be charged.

Powering ON/OFF

- Press and hold the [⏻] button for **~4 seconds** to power the headphones ON or OFF.
- When powered on, the headphones will automatically re-pair to any nearby, previously-paired device with ***Bluetooth enabled***.

Phone Calls

- Press the [⏻] button to answer an incoming phone call. Any playback will be automatically paused.
- Press the [⏻] button again to end a phone call. Any playback will automatically resume.
- Double press the [⏻] button to redial the last outgoing number.
- Press and hold the [⏻] button to reject an incoming call and send straight to voicemail.

Playing Music

To listen to music on the headphones, you must be paired to a Bluetooth-enabled device or connected via the 3.5 mm aux port. Consult the **Bluetooth Pairing** or **Connecting with a 3.5 mm Aux Cable** section of this manual for further instruction.

Bluetooth Pairing

1. Power the headphones ON. A tone will be heard, and the headphone LED indicator will ***flash RED and BLUE***.
2. Set your mobile device to search for Bluetooth devices. When it appears, select **SNC300** from the list of found devices.
3. After a successful pairing, a tone will be heard and the headphone LED indicator will ***slowly flash BLUE***.

In Bluetooth mode, playback and volume can be adjusted with the on-ear controls, or the controls on your paired device.

- Press the [⏻] button to pause and resume playback.
- Press the [+] and [–] buttons to skip tracks.
- Press and hold the [+] and [–] buttons to adjust volume.

Connecting with a 3.5 mm Aux Cable

Plug one connector of a 3.5 mm auxiliary cable *(not included)* into the 3.5 mm aux input port on the bottom of the left earcup. Plug the other connector into the audio output port on your media-playing device.

- In auxiliary mode, playback and volume will be adjusted with the controls on your connected device.
- The headphones will automatically power OFF when a 3.5 mm aux cable is unplugged.

Using the Active Noise Control

The headphones' Active Noise Control (noise cancelling) feature reduces unwanted noise from the outside environment. You can use ANC while listening to audio, or use ANC by itself.

- Press the [-⩘-] button to turn on Active Noise Control (noise cancellation). The ANC LED indicator will ***light up solid GREEN***.
- Press the [-⩘-] button again to turn ANC off. The ANC LED indicator will turn OFF.

FCC Warning Statement

Changes or modifications not expressly approved by the party responsible for compliance could void the user's authority to operate the equipment. This equipment has been tested and found to comply with the limits for a Class B digital device, pursuant to Part 15 of the FCC Rules. These limits are designed to provide reasonable protection against harmful interference in a residential installation. This equipment generates uses and can radiate radio frequency energy and, if not installed and used in accordance with the instructions, may cause harmful interference to radio communications. However, there is no guarantee that interference will not occur in a particular installation. If this equipment does cause harmful interference to radio or television reception, which can be determined by turning the equipment off and on, the user is encouraged to try to correct the interference by one or more of the following measures:

- Reorient or relocate the receiving antenna.
- Increase the separation between the equipment and receiver.
- Connect the equipment into an outlet on a circuit different from that to which the receiver is connected.
- Consult the dealer or an experienced radio/TV technician for help.

This device complies with part 15 of the FCC Rules. Operation is subject to the following two conditions: (1) This device may not cause harmful interference, and (2) this device must accept any interference received, including interference that may cause undesired operation.