PRELIMINARY

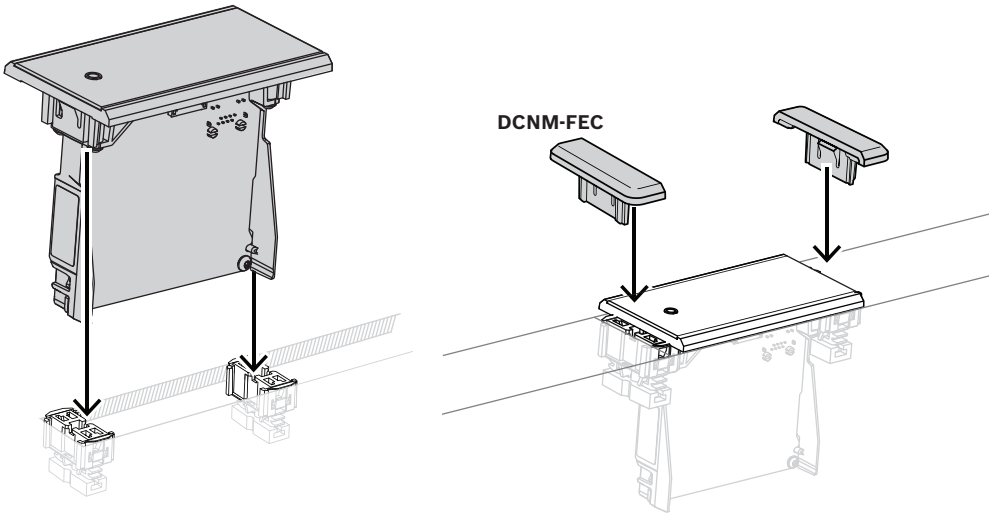

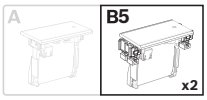

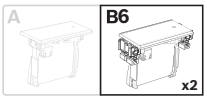

Block mounting method

Note: Refer to the figure for the dimensions of a recess for the block-mounting method.

The length (x) of a recess depends on the total number-size factor (NSF) of the flush-mounted devices that must be installed in the recess. To calculate the length of a recess:

1. For each flush-mounted device, get the number-size factor (NSF).
2. Add the NSFs of the flush-mounted devices to get the total NSF.
3. Use the total NSF to get the length (x) of the recess from the table. The length includes the DCN-FCOUP couple pieces.

Notice!

Install DCNM-FEC Flush end caps on the couple pieces at the two ends of the recess.

Total NSF	x (mm)
1	71.5
2	121.5
3	171.5
4	221.5
5	271.5
6	321.5
7	371.5
8	421.5
9	471.5
10	521.5

Total NSF	x (mm)
11	571.5
12	621.5

Table 7.11: Lengths, block-mounting method

Number-size factor

The length of a recess depends on:

- The number of flush-mounted devices that are installed in the recess.
- The size of the flush-mounted devices that are installed in the recess.

To calculate the length of a recess, you must use the number-size factor (NSF, refer to the table) of the flush-mounted devices.

Flush-mounted device	NSF
DCNM-FMCP	1
DCNM-FMICB	1
DCNM-FPRIOB	1
DCNM-FVP	2
DCNM-FSLP	2
DCNM-FIDP	1
DCNM-FLSP	2
DCNM-FSL	2
DCNM-FBPS	1
DCNM-FBPW	2

Table 7.12: Number-size factors

Removing a flush-mounted device

To remove a flush-mounted device installed on a surface, use the DCNM-FET Flush extraction tools.

PRELIMINARY

PRELIMINARY

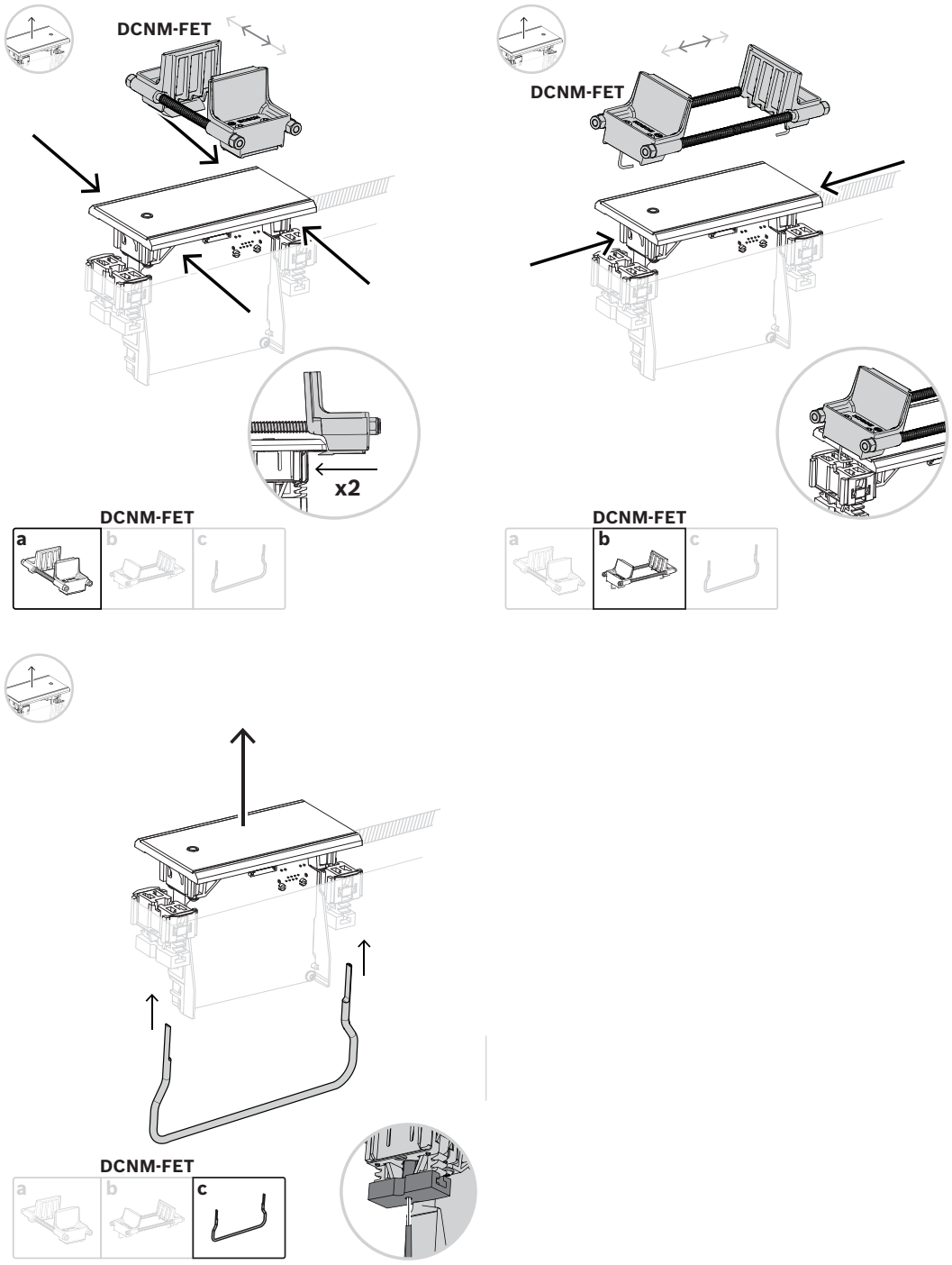

Removing a flush-mounted device

PRELIMINARY

7.3.1 DCNM-FBD2 Flush base device

The flush base device is at the center of the various possible setups with the flush range. Besides the ports to connect the other flush products, it has two connectors for you to daisy-chain with the DICENTIS cables. Refer to *Connecting DICENTIS devices, page 55*.

Control connection

The flush base device has RJ12 connectors to power and control the button panels DCNM-FMICB or DCNM-FPRIOB. You can connect a maximum of four buttons, combining the DCNM-FMICB and the DCNM-FPRIOB.
Four cables with RJ12 plugs are supplied with the DCNM-FBD2. Use a 2 m cable to connect a panel to the DCNM-FBD2 and a 30 cm cable to loop through to the other panels.

Notice!
Use only one long cable per side to prevent the instability of the system due to drawing too much power from the DCNM-FBD2.

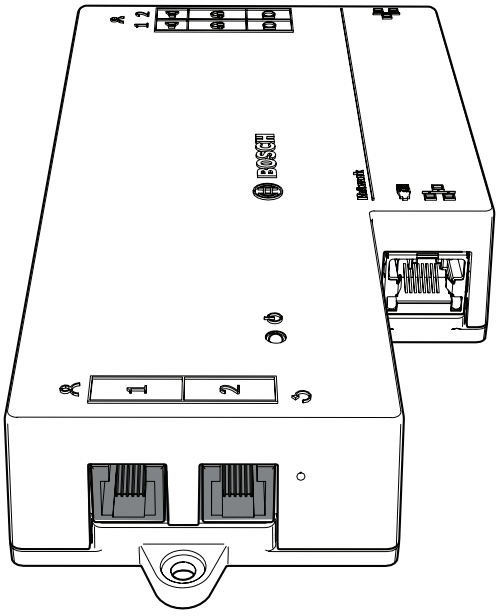

Notice!
The DCNM-FBD only supports the following panels:
- DCNM-FMCP
- DCNM-FMICB
- DCNM-FPRIOB
- DCNM-FLSP.

The DCNM-FBD2 supports the other panels.

Audio connection

The Flush base device has two rows of terminal block connectors for:
– Two loudspeaker outputs for loudspeaker connection with the DCNM-FLSP.
– Two microphone connectors for a balanced microphone connection with the DCNM-FMCP.

PRELIMINARY

Pin	Signal	Function	Remark
1	Loudspeaker positive	Loudspeaker	8 Ω speaker, minimum 2 W.
2	Loudspeaker negative		
3	Headphone signal	Headphone/ headset	Headset not supported.
4	Headphone/headset plug detect		
5	Headphone GND		
6	Headset microphone signal		Pin not used.
7	Microphone GND	Microphone	Balanced, maximum input 5.5 dBV.
8	Microphone signal negative		
9	Microphone signal positive		

Table 7.13: Audio inputs/outputs

Refer to *DCNM-FMICB Flush microphone button panel, page 69*.

Fixating cables

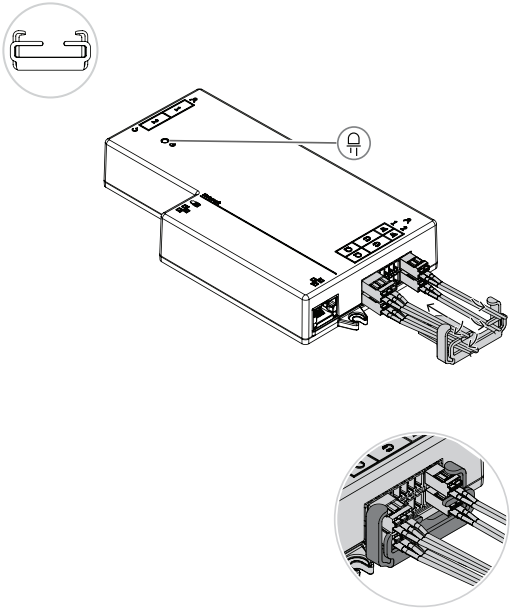

DCNM-FBD2 LED behavior

LED	Description
Off	The device is powered off.
Steady green	The device is ready or fully operational.
Blinking green	The device is not connected to DICENTIS services.
Steady orange	The device is booting.
Alternating between green and orange	The device needs to be updated or it has factory-software.

PRELIMINARY

Panels per DCNM-FBD2

	DCNM-FMICB	DCNM-FPRIOB	DCNM-FIDP	DCNM-FVP	DCNM-FAI	DCNM-FSLP	DCNM-FLSP	DCNM-FMCP
Panels per side	2	1	2	1	1	1	1	1
Notes	A; B		A					

DCNM-FMICB	Flush microphone button panel
DCNM-FPRIOB	Flush priority button panel
DCNM-FIDP	Flush identification panel
DCNM-FVP	Flush voting panel
DCNM-FAI	Flush audio interface
DCNM-FLSP	Flush loudspeaker panel
DCNM-FMCP	Flush microphone connection panel
DCNM-FSLP	Flush language selection panel

Notes

A) These panels are connected through RJ12. You can connect up to four of these panels on each side of the DCNM-FBD2.

B) Connect up to two buttons per side: either two DCNM-FMICB or one DCNM-FMICB and one DCNM-FPRIOB.

PRELIMINARY

7.3.2 DCNM-FMCP Flush microphone connection panel

The flush microphone connection panel connects the pluggable microphones, DCNM-MICSLS and DCNM-MICSLL, to the flush base device. For this purpose, with the DCNM-FMCP comes a 2 m cable with a 3-pole terminal block.

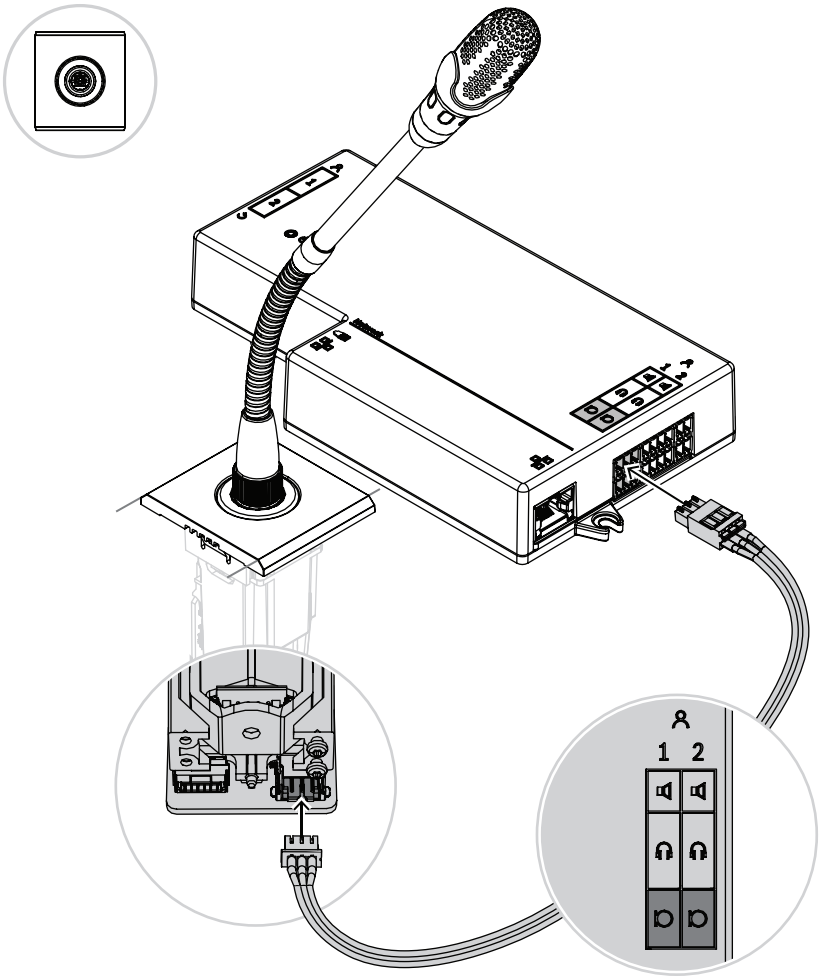

Figure 7.5: Connecting DCNM-FMCP to DCNM-FBD

The DCNM-FMCP also connects to one of the button panels, DCNM-FMICB or DCNM-FPRIOB, which allows for control of the microphone's LED and for powering the microphone. For this connection, use the 30 cm cable that comes with the panel.

PRELIMINARY

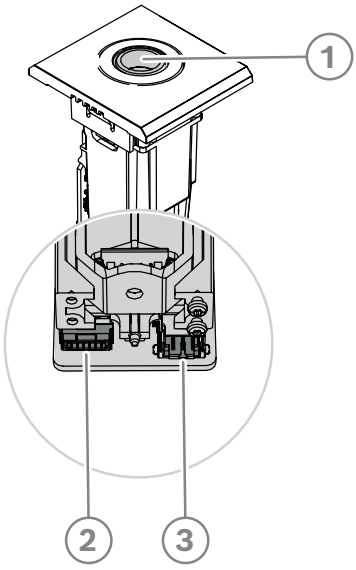

1	Connect the DCNM-FMCP to the DCNM-MICSLS/DCNM-MICSLL, as described in *DICENTIS Microphones, page 88*	2	Connect the DCNM-FMPC to the DCNM-FMICB/DCNM-FPRIOB/DCNM-FAI for power and control OF the LEDs of the microphone and the DCNM-FMCP pre-amplifier
3	Connect the DCNM-FMCP to the DCNM-FBD2 for the audio		

7.3.3 DCNM-FMICB Flush microphone button panel

The flush microphone button panel has three connectors: two RJ12 connectors to connect to the DCNM-FBD2 or to another button panel, and one connector to power and control the microphone LEDs.

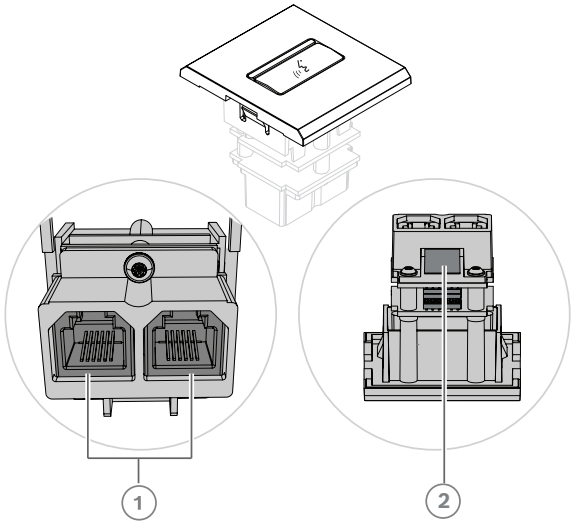

1	Connect the DCNM-FMICB to the DCNM-FBD2/other button panels	2	Connect the DCNM-FMICB to the DCNM-FMCP to enable the LEDs and pre-amplifier of the microphone connection panel

PRELIMINARY

7.3.4 DCNM-FPRIOB Flush priority button panel

The flush priority button panel has three connectors: two RJ12 connectors to connect to the DCNM-FBD2 or to another button panel, and one connector to power and control the microphone LEDs. Use the 30 cm cable supplied with the DCNM-FPRIOB to loop through to the other panels.

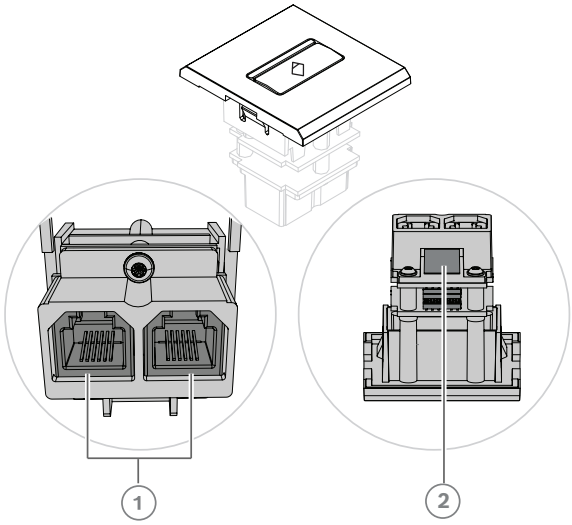

1	Connect the DCNM-FPRIOB to the DCNM-FBD2/other button panels	2*	Connect the DCNM-FPRIOB to the DCNM-FMCP to enable the LEDs and pre-amplifier of the microphone connection panel

*You only need to use this connector if:

- The seat does not have a DCNM-FMICB.
- Your setup has two microphones. DCNM-FMICB powers one and DCNM-FPRIOB powers the other.

Notice!

The DCNM-FPRIOB only functions as a priority button when the seat or participant has priority rights. If the seat or participant does not have priority rights, the DCNM-FPRIOB will be a mute or request-to-speak button, depending on the configuration in the discussion settings. The LEDs will be turned off.

PRELIMINARY

7.3.5 DCNM-FLSP Flush loudspeaker panel

The flush loudspeaker comes with a fixed 2 m cable ended in a 2-pole terminal block to connect to the flush base device. The DCNM-FBD2 has two ports for loudspeakers, creating two participant seats. The DCNM-FLSP can be active at the same time as the microphone, making sure the speech intelligibility is excellent.

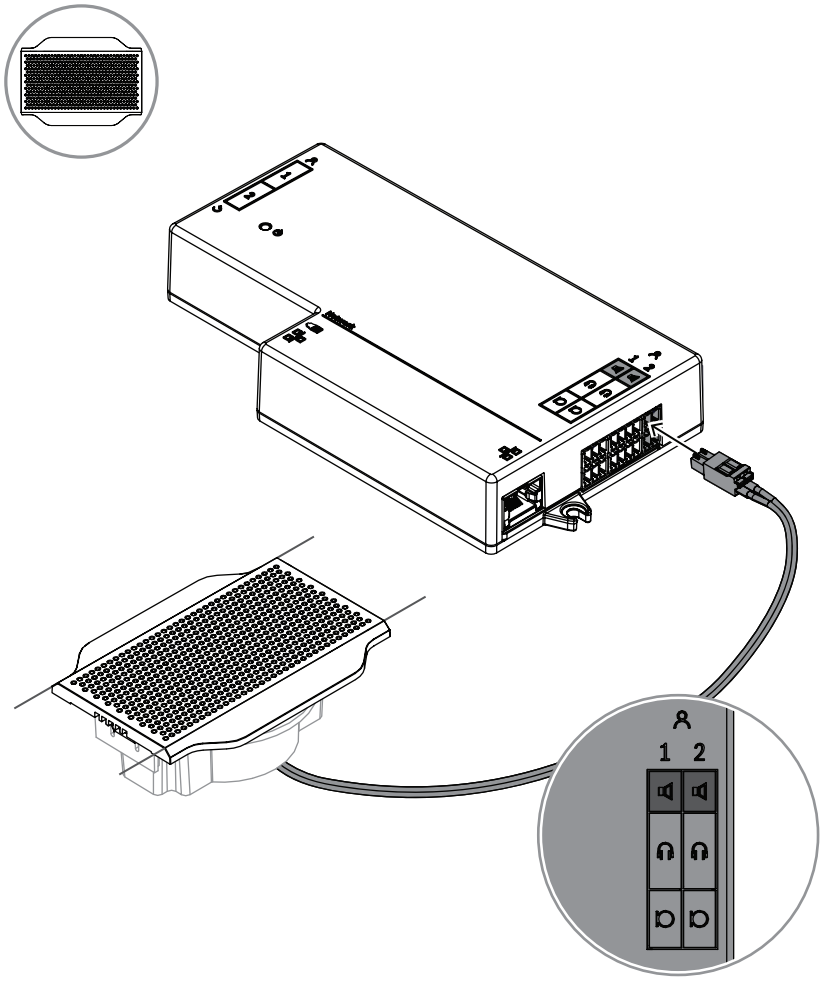

Figure 7.6: Connecting one DCNM-FLSP to the DCNM-FBD2

To use the DCNM-FPT to change a table cut for the DCNM-FLSP, position the 100 mm tool in the existing slot. Use it as a template to draw the lines by which you need to cut: the outside of the tool is the maximum cut, the inside of the tool is the minimum.

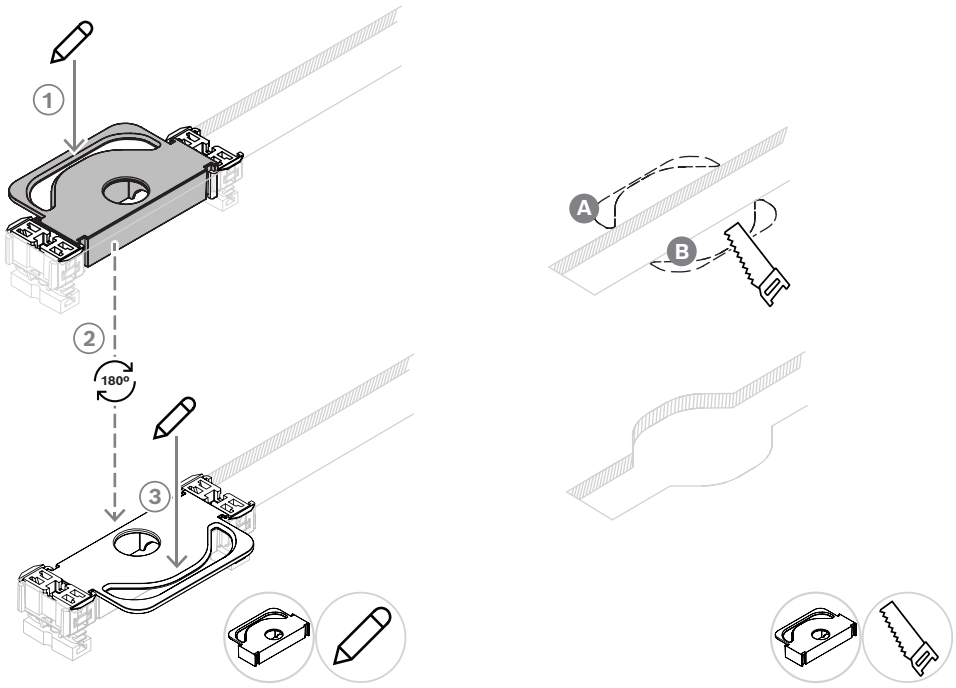

To use the DCNM-FPT to create a new table cut for the DCNM-FLSP, position the coupling pieces and use them to draw the lines by which you need to cut.

PRELIMINARY

PRELIMINARY

7.3.6 DCNM-FVP Flush voting panel

The flush voting panel comes with a 30 cm cable to connect, through RJ12, to the DCNM-FBD2 or to daisy-chain to the other panels. It is also possible to connect a 3rd party presence / fraud button through a galvanic separated input contact.

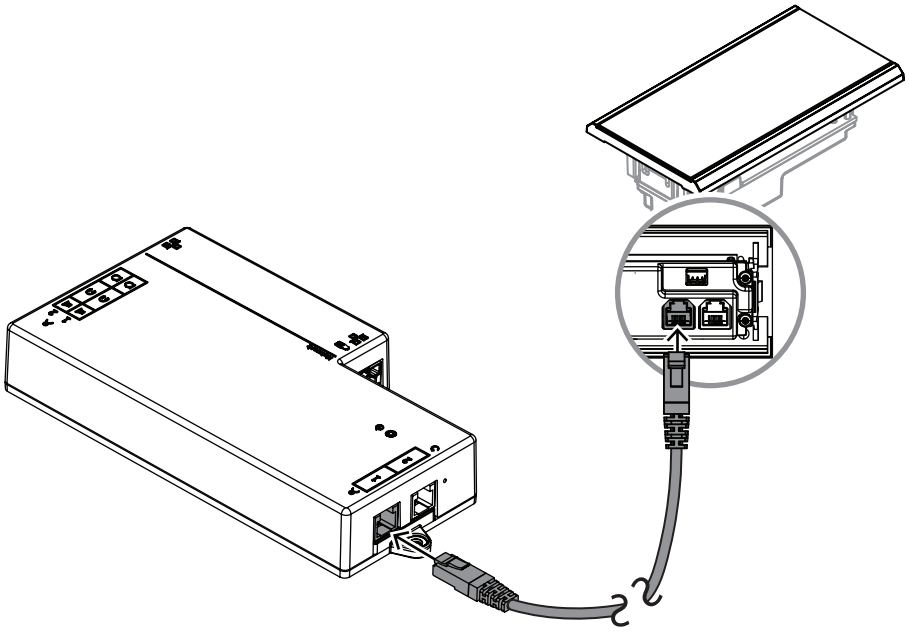

Figure 7.7: Connect the DCNM-FVP to the DCNM-FBD2 for control

7.3.7 DCNM-FSLP Flush language selection panel

The language selection panel comes with a 30 cm cable and with a headphone connection cable. Use the 30 cm cable to connect, through RJ12, to the DCNM-FBD2 or to daisy-chain to the other panels. Use the headphone connection cable to connect to the headset connector of the DCNM-FBD2.

PRELIMINARY

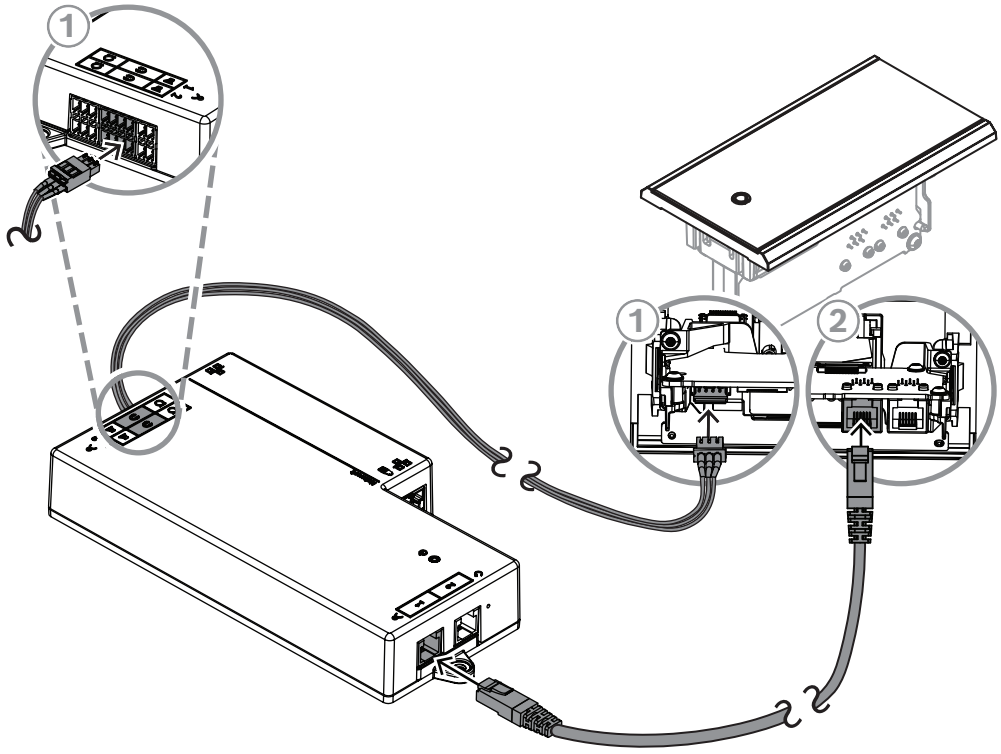

1	Connect the DCNM-FSLP to the DCNM-FBD2 or to the other panels for control	2	Connect the DCNM-FSLP to the DCNM-FBD2 for audio

Notice!
You can connect one language selection panel on each side of the DCNM-FBD2 to have a total of two in your setup.

7.3.8 DCNM-FAI Flush audio interface

The flush audio interface connects to the flush hand held microphones to create participant seats and floor-standing positions. It also makes it easy to install a microphone that requires phantom power to the DICENTIS System flush-mounted setups.

PRELIMINARY

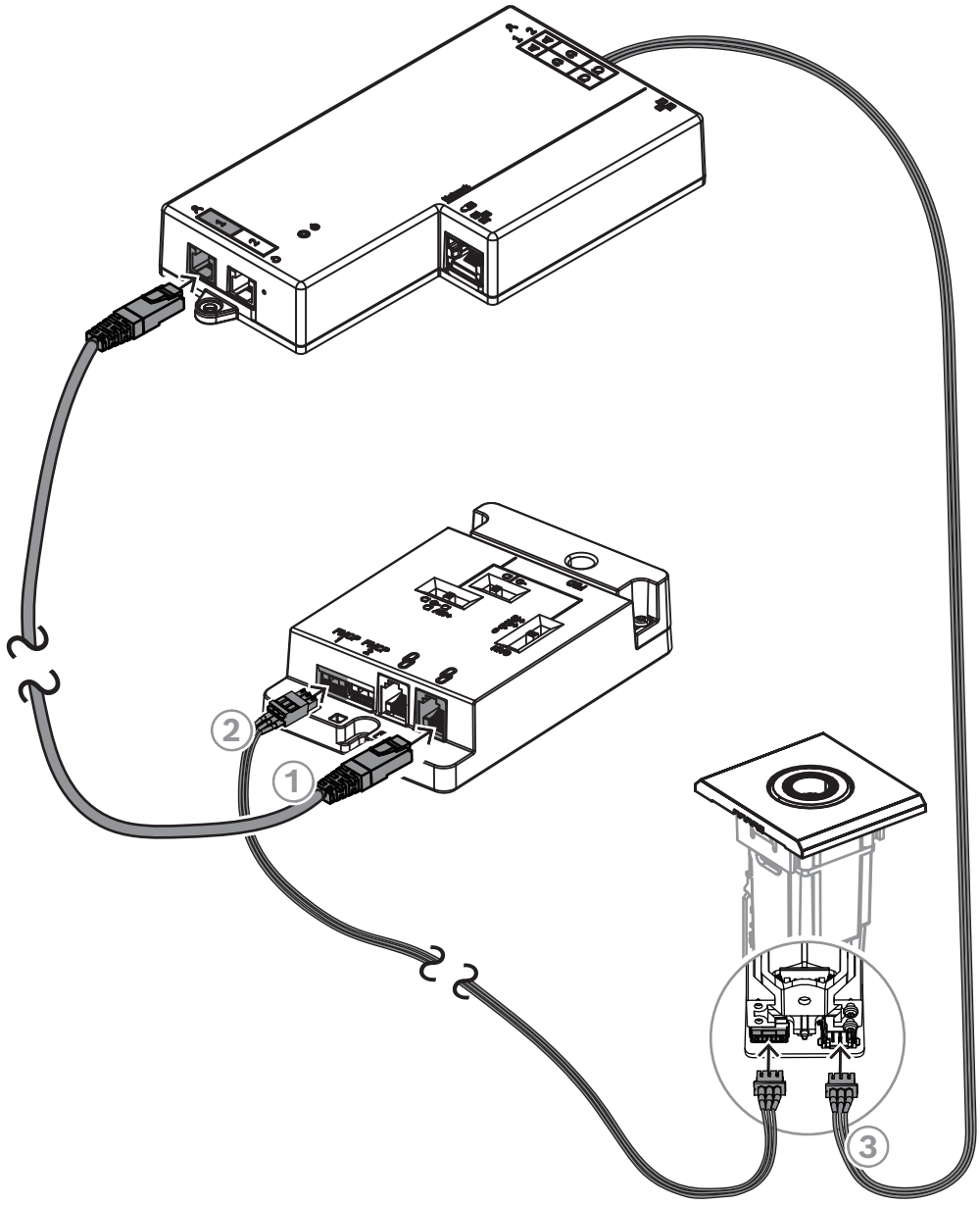

1	Connect the DCNM-FAI to the DCNM-FBD2 for power and control	2	Connect the DCNM-FAI to the DCNM-FMCP to enable the LEDs and pre-amplifier of the microphone connection panel
3	Connect the DCNM-FMCP to the DCNM-FBD2 for the audio		

PRELIMINARY

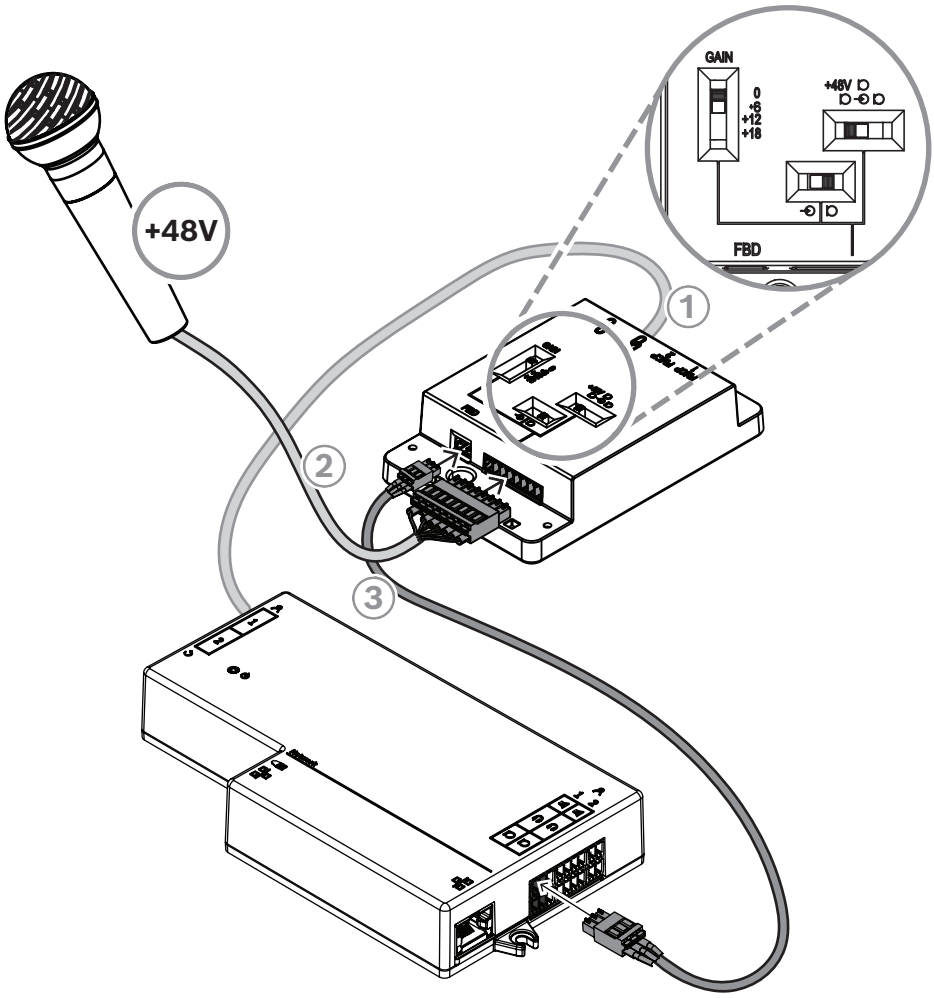

1	Connect the DCNM-FAI to the DCNM-FBD2 for power and control	2	Connect the DCNM-FAI to 3rd party microphones and other audio equipment
3	Connect the DCNM-FAI to the DCNM-FBD2 for the audio		

To see how to connect the flush hand held microphones, refer to *DCNM-FHH / DCNM-FHHC Flush hand held microphones, page 77*.

Slide switches

The DCNM-FAI has three slide switches to select the audio settings:

– The 1st switch position selects Mic/Line levels. The input levels supported are:

Signal type	Nominal level	Maximum level
Unbalanced line	-12 dBV	18 dBV
Balanced line	-18 dBV	12 dBV
Unbalanced microphone	-46 dBV	-16 dBV
Balanced microphone	-52 dBV	-22 dBV

- The 2nd switch position selects the power settings. The power settings supported are:
  - Phantom power 48 V.
  - Mic bias. This power setting does not support balanced signals.
  - No power on audio signal lines.
- The 3rd switch position selects the gain settings.

The DCNM-FAI also has an 8-pin connector with the signals for unbalanced and balanced audio, LED power for the microphone, and RTS button control.

Notice!
When your setup has a DCNM-FMICB and a DCNM-FAI, always connect the DCNM-FMICB in a position closer to the DCNM-FBD2. This will guarantee that the DCNM-FMICB is the first device to be discovered.

7.3.9 DCNM-FHH / DCNM-FHHC Flush hand held microphones

The Flush hand held microphones can be installed in participant seats without space for a tabletop or flush-mounted device. They can also create a floor-stand microphone position. Depending on your needs and preferences, choose the DCNM-FHH with a straight cable or the DCNM-FHHC with a coiled cable, both with 5 m.

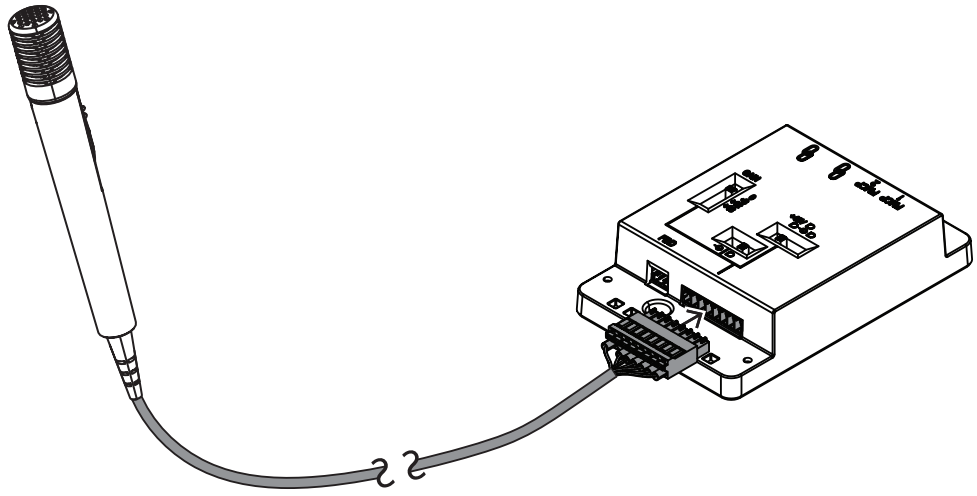

Figure 7.8: Connect the DCNM-FAI to the DCNM-FHH / DCNM-FHHC

7.3.10 DCNM-FIDP Flush identification panel

A flush identification panel is necessary for every seat that requires automatic identification. The DCNM-FIDP comes with a 30 cm cable to connect, through RJ12, to the DCNM-FBD2 or to daisy-chain to the other panels. In dual use mode, four identification panels can be connected to the DCNM-FBD2.

PRELIMINARY

PRELIMINARY

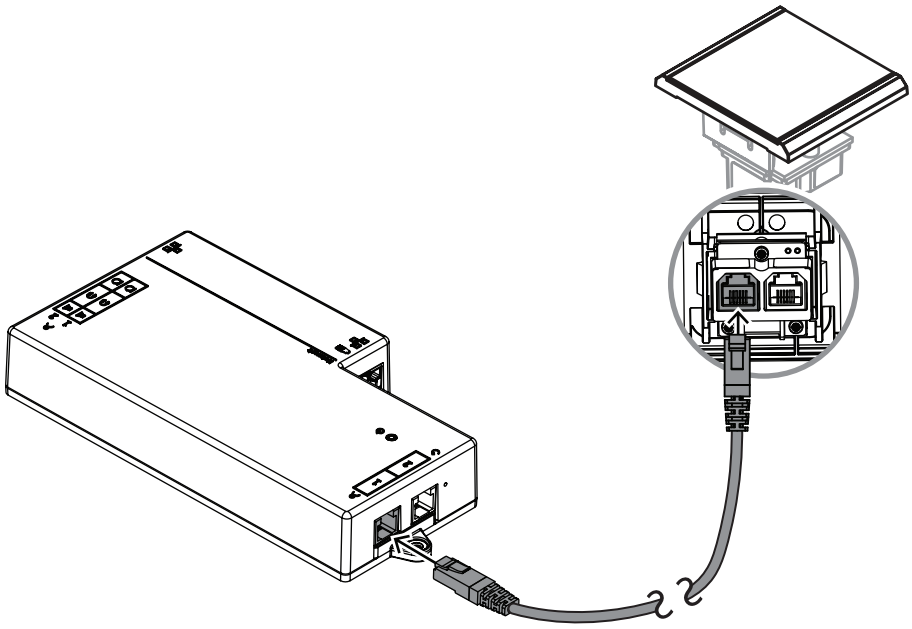

Figure 7.9: Connect the DCNM-FIDP to the DCNM-FBD2 for control

7.3.11 DCNM-FICH Flush ID card holder

The ID card holder makes sure that the ID card is correctly positioned next to the DCNM-FIDP for continuous and reliable identification. Mount it on the left or right of the DCNM-FIDP, at the end of the panels. The DCNM-FICH replaces the DCNM-FEC on that side.

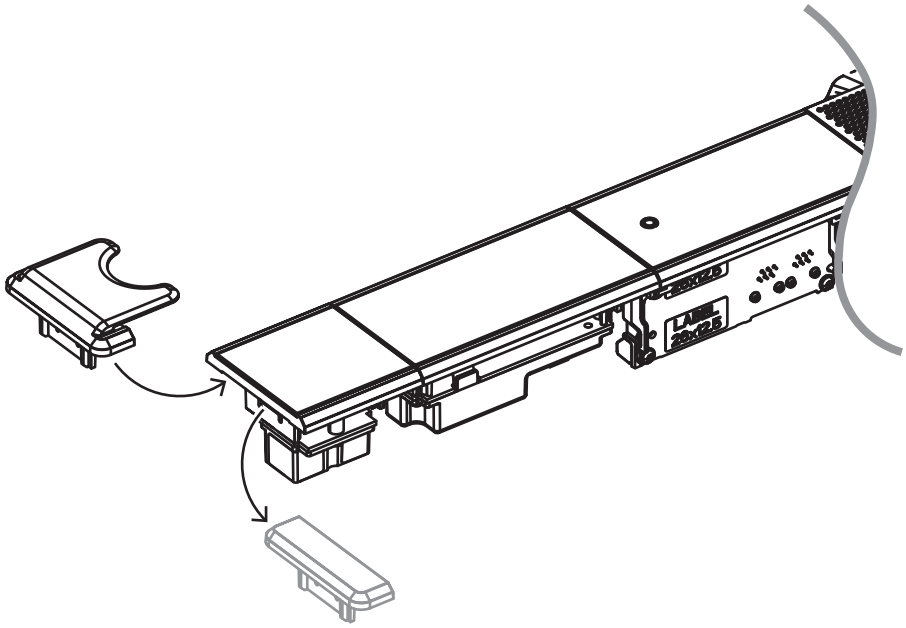

Figure 7.10: Replace the DCNM-FEC by the DCNM-FICH

PRELIMINARY

7.3.12 DCNM-FSL Flush language selector

Use the flush language selector in setups without a microphone. It is ideal for when the participants need to select their preferred language to listen to the meeting but do not have to actively participate.

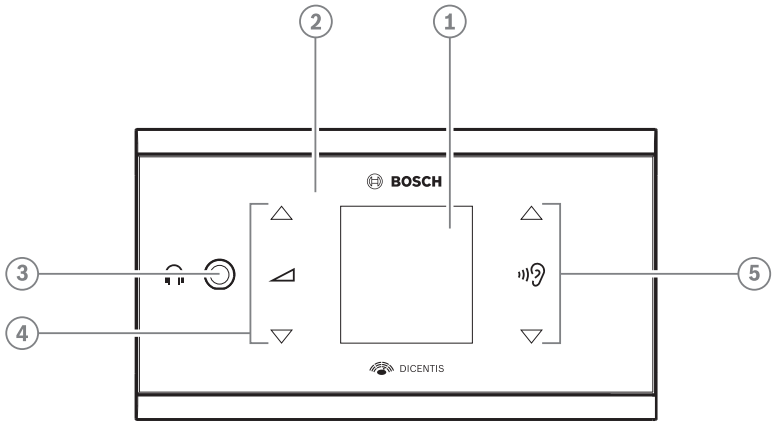

Item	Description
1	LCD screen
2	Capacitive touch screen
3	3.5 mm stereo jack for headphone
4	Headphone volume control
5	Language selection buttons

- The DCNM-FSL display turns on when a headphone is connected.
- The DCNM-FSL display automatically turns off when it is not used for 10 seconds. It will turn on again once you touch the volume control or language selection buttons.

Connect the language selector to a PoE switch in the DICENTIS network with a CAT-5e cable.

Notice!
Assign the DCNM-FSL Flush language selector to the same seat as the microphone so that the language selector headphones will automatically chose the language assigned to the participant. The language selector will decrease the volume level of the signal sent to the headphones when the microphone is active to prevent acoustic feedback.

External headphones socket

You can connect an external headphones socket to the language selector (e.g. a 3.5 mm headphones socket). The external headphones socket must be connected to a plug or to solder pads.

PRELIMINARY

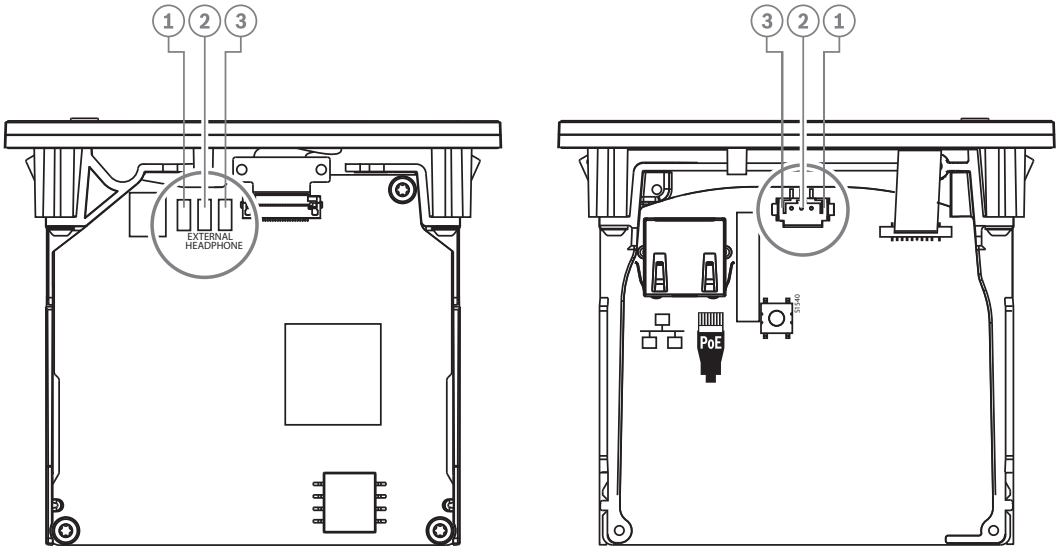

Figure 7.11: External headphones connection

The solder pads , external headphone connector, and built-in 3.5 mm socket are internally connected.

Plug (pin)	Solder pad	Signal
1	Left solder pad	Detect
2	Center solder pad	Signal
3	Right solder pad	GND

Table 7.14: External headphones connection

Notice!
You can connect, for example, an AMP173977-3 socket to the external headphones plug of the language selector.

Warning!
When using the external sockets of the DCNM-FSL, make sure that all connections are electrically floating. In case any connections are part of an earth loop, unexpected system behavior can occur.

Warning!
To prevent the user from suffering an unpleasant ESD discharge while inserting the headphones into the connector, always use a headphone connector with a plastic front in combination with the external headphone connection.

External headphone connection

When using an external headphone connector, please install it according to the electrical diagram below (wiring and jack connector).

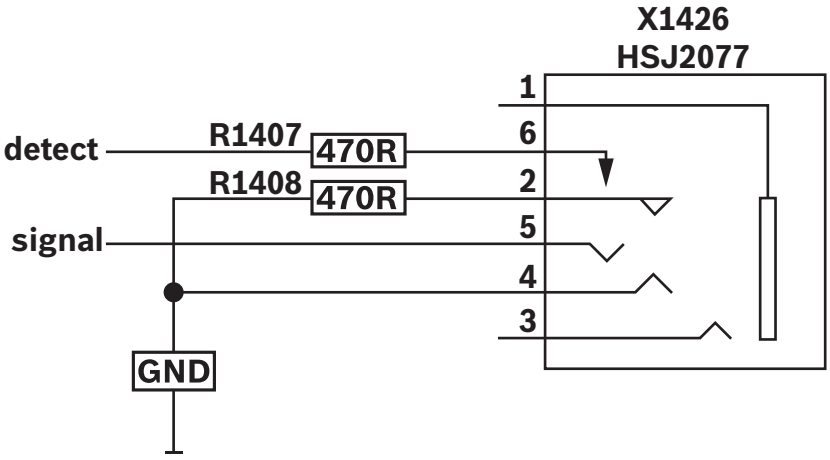

Figure 7.12: External headphone connector diagram

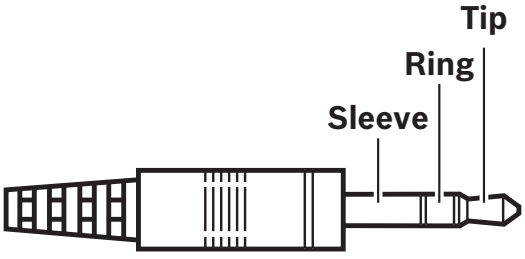

Figure 7.13: Headphone jack connection

	Tip	Ring	Sleeve
Normal	Audio R	Audio L	GND
DCNM-FSL	Signal	GND	*Not connected*

Table 7.15: Headphone jack connection

Notice!
The jack connector must include internal plug detection, which is used to enable the display. The display will not turn on if you use an incorrect connector (it should have a "jack inserted" switch). If you do not want to use this function, you must connect the detect signal to GND, so that the device thinks that a headphone is connected. Please note that this will cause the buttons' LEDs to be always on, which results in a shortened lifetime of the buttons' LEDs.

PRELIMINARY