DICENTIS

Conference System

en Hardware Installation Manual

Table of contents

1	**Safety**	**4**
2	**About this manual**	**6**
2.1	Intended audience	6
2.2	Alerts and notice signs	6
2.3	Copyright and disclaimer	6
2.4	Document history	6
3	**System installation overview**	**9**
3.1	Typical system setup	10
3.2	System extension	13
4	**System installation design and planning**	**17**
4.1	System capabilities	17
4.2	Hardware requirements	19
4.3	Power supply capacity calculation plan	22
4.3.1	Calculation using DCNM-APS(2) or DCNM-PS(2)	22
4.3.2	Calculation using PoE switches	24
4.4	Redundancy options	26
4.4.1	Redundant cabling for DCNM-APS/DCNM-PS units	27
4.4.2	Redundant cabling for DCNM-APS2/DCNM-PS2 units	28
4.4.3	Redundant server PC	30
5	**Installation material and tools**	**31**
5.1	DICENTIS System Cable Assemblies	31
5.2	DCNM-CBCON Connectors for DICENTIS cable	32
5.3	DCNM-CBTK System Network Cable Toolkit	33
5.4	DCNM-CB250-I System Installation Cable	34
5.5	DCNM-CBCPLR Cable couplers	35
5.5.1	Using a cable coupler to extend a cable	35
5.5.2	Using a cable coupler as a break-out box	35
5.5.3	Using a cable coupler as an interface between different types of cable	36
5.5.4	Using a cable coupler to insert power locally	38
6	**Mechanical installation of Central Equipment**	**40**
6.1	Audio processor and powering switch and Powering switch	40
7	**Mechanical installation of Contribution Devices**	**43**
7.1	DICENTIS devices	43
7.2	DCNMM-IDESK / DCNM-IDESKVID Interpreter desk	46
7.3	DICENTIS Microphones	49
7.4	DCNM-MMDSP Anti-reflection foil	51
7.5	DCNM-NCH Name Card Holder	51
7.6	DCNM-IDESKINT On-air & telephone interface DCNM-IDESK	52
8	**Installation Test**	**53**

1 Safety

Prior to installing or operating products, always read the Important Safety Instructions which are available as a separate multilingual document: Important Safety Instructions (Safety_ML). These instructions are supplied together with all equipment that can be connected to the mains supply.

Safety precautions

Some of the DICENTIS Conference System products are designed to be connected to the public mains network.
To avoid any risk of electric shock, all interventions must be carried out with disconnected mains supply.
Interventions with the equipment switched on are authorized only when it is impossible to switch the equipment off. The operation must only be performed by qualified personnel.

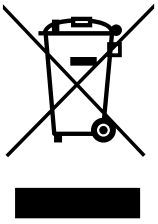

Old electrical and electronic appliances

Electrical or electronic devices that are no longer serviceable must be collected separately and sent for environmentally compatible recycling (in accordance with the European Waste Electrical and Electronic Equipment Directive).
To dispose of old electrical or electronic devices, you should use the return and collection systems put in place in the country concerned.

Class A equipment (commercial broadcasting equipment)

This equipment is for professional (Class A) electromagnetic compatibility equipment. Seller or user should pay attention to this point. It is intended for use outside the home.

Warning!

Changes or modifications not expressly approved by Bosch Security Systems could void the user’s authority to operate the equipment.

FCC Statements - Class A digital device

This equipment has been tested and found to comply with the limits for a Class A digital device, pursuant to part 15 of the FCC Rules. These limits are designed to provide reasonable protection against harmful interference when the equipment is operated in a commercial environment. This equipment generates, uses, and can radiate radio frequency energy and, if not installed and used in accordance with the instruction manual, may cause harmful interference to radio communications. Operation of this equipment in a residential area is likely to cause harmful interference in which case the user will be required to correct the interference at his/her own expense.

IC Statement

This device complies with Industry Canada license-exempt RSS standard(s). Operation is subject to the following two conditions:
(1) this device may not cause interference, and
(2) this device must accept any interference, including interference that may cause undesired operation of the device.
Le présent appareil est conforme aux CNR d'Industrie Canada applicables aux appareils radio exempts de licence. L'exploitation est autorisée aux deux conditions suivantes :
(1) l'appareil ne doit pas produire de brouillage, et

(2) l'utilisateur de l'appareil doit accepter tout brouillage radioélectrique subi, même si le brouillage est susceptible d'en compromettre le fonctionnement.

2 About this manual

The purpose of this manual is to provide information required for installing the DICENTIS Conference System.
This installation manual is available as a digital document in the Adobe portable document format (PDF).
For more information, refer to the product related information on www.boschsecurity.com

2.1 Intended audience

This hardware installation manual is intended for installers of a DICENTIS Conference System.

2.2 Alerts and notice signs

Four types of signs can be used in this manual. The type is closely related to the effect that may be caused if it is not observed. These signs - from least severe effect to most severe effect - are:

Notice!
Containing additional information. Usually, not observing a ‘notice’ does not result in damage to the equipment or personal injuries.

Caution!
The equipment or the property can be damaged, or persons can be lightly injured if the alert is not observed.

Warning!
The equipment or the property can be seriously damaged, or persons can be severely injured if the alert is not observed.

Danger!
Not observing the alert can lead to severe injuries or death.

2.3 Copyright and disclaimer

All rights reserved. No part of this document may be reproduced or transmitted in any form by any means, electronic, mechanical, photocopying, recording, or otherwise, without the prior written permission of the publisher. For information on getting permission for reprints and excerpts, contact Bosch Security Systems B.V..
The content and illustrations are subject to change without prior notice.

2.4 Document history

Release date	Documentation version	Reason
2013.08	V1.0	1st edition.
2014.07	V1.1	2nd edition. New sections: 1 WEEE, 3.2 system ext, 5.2.1, 5.2.2.

Release date	Documentation version	Reason
		Sections updated: 2.4, 4.3.2, 5.2, 5.3, 5.4, 7.2 + DCNM-MICx added.
2014.10	V1.2	3rd edition. Sections updated: 2.4, 3.2, 4.1 and 4.3.1.
2015.07	V1.3	4th edition. New section: 4.4, including sub-sections: 4.4.1, 4.4.2, and 4.4.3. Sections updated: 2.4, 3.1, 3.2, 4.1, 4.3, 4.3.1, 5.3, 5.4, 6.1, 7.4, 8.
2015.11	V1.31	5th edition. Sections updated: 2.4, 7.1. Terminology updated.
2016.07	V1.4	6th edition. Terminology updated. DCN multimedia changed to DICENTIS . Sections updated: 3.1, 3.2, 4.1, 4.3.1, 4.3.2, 4.4.1, 4.4.2, 4.4.3, 5.3, 5.4, 7.1, 7.2, 7.3, 7.4, 8.
2017.10	V1.5	7th edition. Terminology and product names updated. New section: 5.5 Sections updated: 5.2.1, 5.2.2, 7.1 new radio interference warning added.
2017.12	V1.6	8th edition. Sections updated: 5.5.3, 5.5.4.
2018.04	V1.7	9th edition. Sections updated: 3.1, 3.2, 4.3.1, 4.3.2, 4.4, 5.2, 5.4, 5.5.4. New section: 7.2 DCNM-IDESK and DCNM-IDESKVID Interpreter desk added.
2018.09	V1.8	10th edition. Sections updated: 1, 7.2.

Release date	Documentation version	Reason
		New section: 7.2 DCNM-IDESKINT On-air & telephone interface DCNM-IDESK

3 System installation overview

It is advisable to participate in the DICENTIS Conference System training before you install, configure, prepare, and operate a DICENTIS Conference System.

The DICENTIS Conference System is an IP based conference system which runs on an OMNEO compatible Ethernet network. It is used for distributing and processing audio, video and data signals.
The DICENTIS Conference System can be quickly and easily configured as a daisy-chain configuration or as a star configuration:

- **Daisy-chain configuration**: Uses dedicated cabling, consisting of CAT-5e cables including two additional power conductors (see *Typical system setup, page 10*).
- **Star configuration**: Each DICENTIS device is connected with an individual standard CAT-5e cable. An Ethernet switch is also required for providing Power over Ethernet (PoE).

Notice!
When Power over Ethernet is used, DICENTIS devices cannot be daisy-chained. Please use unshielded cable for the DICENTIS discussion devices.

See also

- *Typical system setup, page 10*

3.1 Typical system setup

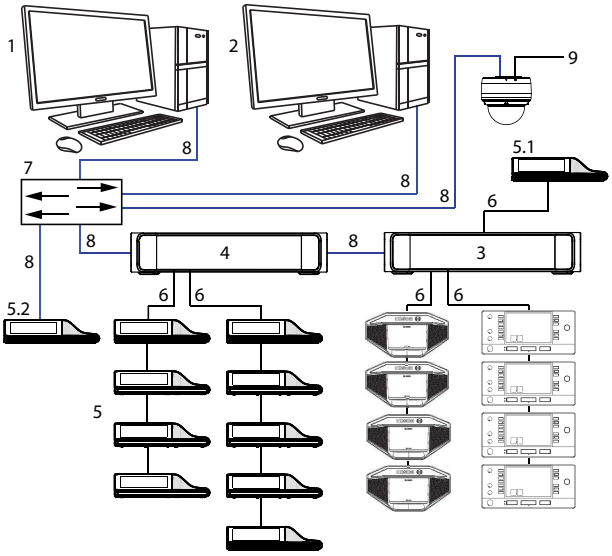

Figure 3.1: Typical DICENTIS Conference System setup

A typical DICENTIS Conference System consists of:

1. System server controller (PC):
   – The heart of the system. It licenses functionality, configures and controls the system.
2. Client PC:
   – Can be used to: Manage meetings, prepare meetings and configure the system.
3. Audio processor and powering switch (DCNM-APS / DCNM-APS2):
   – Controls the system audio, routes audio from and to the system and supplies power to the DICENTIS devices.
4. Powering switch (DCNM-PS / DCNM-PS2):
   – Is used to increase the number of DICENTIS devices connected to the system.
5. DICENTIS devices: DCNM-D, DCNM-DVT, DCNM-DSL, DCNM-DE / DCNM-MMD2, DCNM-MMD:
   – Participants can use their DICENTIS device to contribute to a meeting.
   – **5.1** is a DICENTIS Multimedia device used for “system power on/off”. This device is always connected to the powered socket of the Audio processor and powering switch or Powering switch.
     Note: Only one DICENTIS Multimedia device should be connected here.
   – **5.2** is a DICENTIS device used via a “Power over Ethernet” (PoE) Ethernet switch.
     Note: Only one DICENTIS device should be connected here.
   – **5.3** are DICENTIS Interpretation desks: DCNM-IDESK and DCNM-IDESKVID. Provides extensive facilities for professional interpretation for the DICENTIS Conference System.
     Note: A maximum of 10 desks can be installed per booth.
6. System Network Cable (DCNM-CBxxx):
   – Connects DICENTIS devices, the Audio processor and powering switch, and one or more Powering switches to each other.
7. Ethernet switch:
   – Ethernet switch with PoE on some ports.
     - Routes the system data via Ethernet.
     - Provides power to the DICENTIS devices via PoE.

8. CAT-5e Ethernet cable (minimum requirement).
9. Optional video camera (Onvif Profile-S compatible cameras, Sony IP cameras via CGI commands, or Panasonic HD Integrated IP) + external power supply:
   – Captures the image of a speaking participant.

   Note: The Sony camera needs to be placed in a separate VLAN to avoid problems with the multicast data.

   Note: The Panasonic camera requires an external H.264 encoder if the SDI video needs to be displayed on the multimedia devices (or in the Meeting Application).

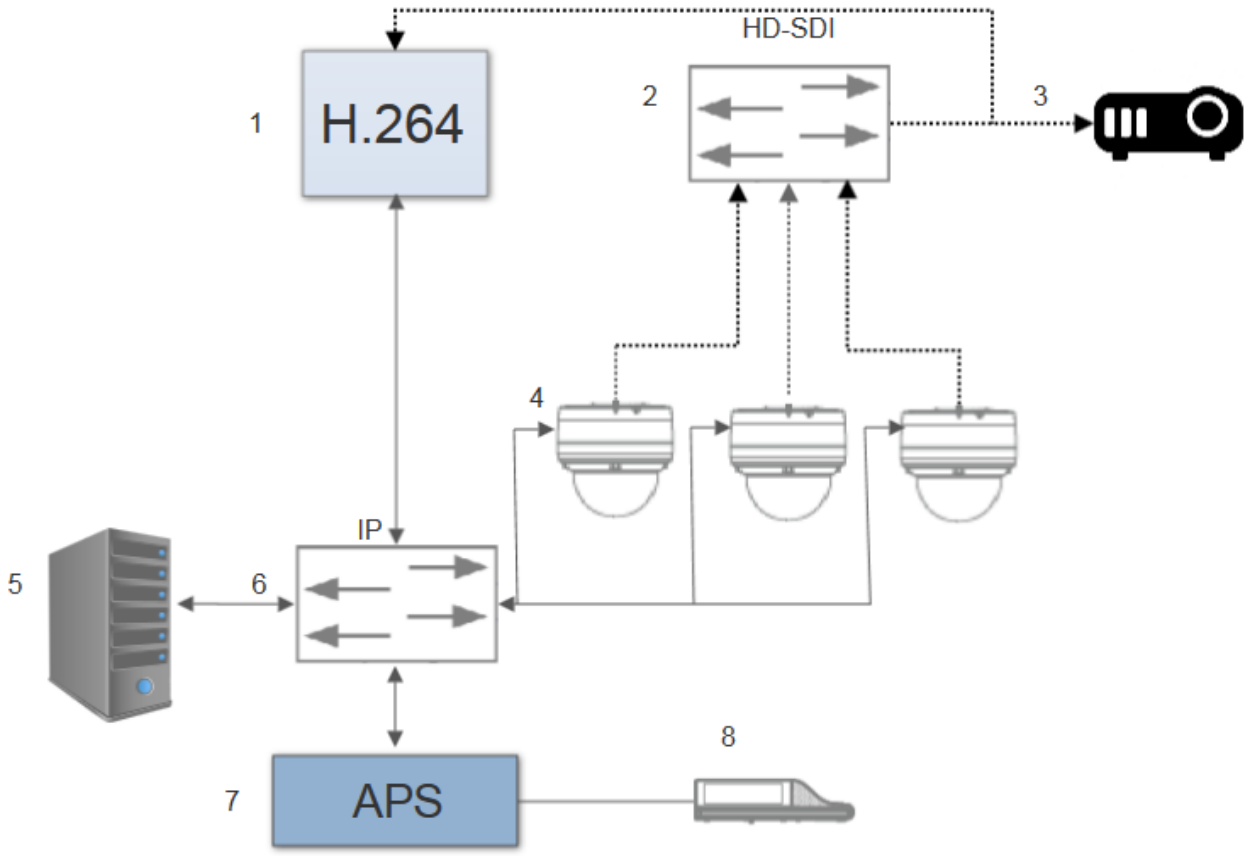

Figure 3.2: Typical camera setup

A typical camera setup in a DICENTIS Conference System consists of:

1. H.264 encoder to encode the HD SDI video to H.264
2. HD-SDI switcher
3. Projector
4. Video camera (Onvif Profile-S compatible camera, Sony, Panasonic)
5. System server controller (PC)
6. L3 Ethernet switch
7. Audio processor and powering switch (DCNM-APS / DCNM-APS2)
8. DCNM-MMD2

Cables:

– Dotted line = HD-SDI (coax cable)
– Black with arrow = Ethernet TCP/IP
– Black straight line = DCNM-cable

This system overview does not give information on redundant network options. For more information, refer to *Redundancy options, page 26*.

3.2 System extension

The DICENTIS Conference System is scalable from small to medium to large. This section describes what a small, medium and large system is and what the requirements are for these systems:

A small DICENTIS Conference System (see *Typical system setup, page 10*) consists of:
- up to 100 DICENTIS devices.
- all DICENTIS devices in 1 subnet.
- 1 DICENTIS Audio processor and powering switch for the audio processing.
- 1 Server PC which hosts the DICENTIS services.

A medium DICENTIS Conference System consists of:
- up to 450 DICENTIS nodes.
  Refer to table X about the node count of DICENTIS equipment.
- all DICENTIS devices in 1 subnet.
- 1 DICENTIS Audio processor and powering switch for the audio processing.
- 1 Server PC which hosts the DICENTIS services.
- 1 ARNI-Standard to increase the size of the system.

A large DICENTIS Conference System consists of:
- up to 750 DICENTIS devices.
- multiple subnets connected by use of a router/L3 switch.
  - Each subnet can have up to 450 DICENTIS nodes.
    Refer to the following table for the node count of DICENTIS equipment.
  - The first subnet has:
    - 1 DICENTIS Audio processor and powering switch for the audio processing.
    - 1 Server PC which hosts the DICENTIS services.
    - 1 ARNI-Enterprise to increase the size of the system.
  - All other subnets have 1 ARNI-Standard to increase the size of the system.
    Note: There is no DICENTIS Audio processor and powering switch in the other subnets.

Device	Node count
DICENTIS server	0
DICENTIS meeting application	0
DICENTIS Audio processor and powering switch	1
DICENTIS Powering switch	1
DICENTIS multimedia device	2
DICENTIS discussion device	1
DICENTIS discussion device select language	1
DICENTIS discussion device voting	1
DICENTIS discussion device extended	1
DICENTIS Interpreter desk	1
DCNM-IDESKVID Interpreter desk with video	1

Device	Node count
ARNI-E OMNEO interface	0
ARNI-S OMNEO interface	0

Tab. 3.1: Nodes count of DICENTIS equipment

An ARNI (Audio Routed Network Interface) is used to increase the number of DICENTIS devices on a single subnet and to connect multiple DICENTIS system subnets. If more than one subnet is required, two types of an ARNI must be used.

– OMN-ARNIS (ARNI-S OMNEO interface): The ARNI-S is required for increasing the system size above 100 DICENTIS devices. It supports up to 450 DICENTIS nodes in its subnet. It also acts as a DHCP server in its subnet.
– OMN-ARNI-E (ARNI-E OMNEO interface): The ARNI-E is required for increasing the system size above 450 DICENTIS nodes. It supports up to 450 DICENTIS nodes in its subnet. It also acts as a DHCP server in its subnet. It can connect up to 40 subnets, each with an ARNI-S.

Defining subnets and subnet masks

A subnet is a logical, visible subdivision of an IP network. The number of DICENTIS devices that can be in the same subnet depends on the subnet mask.
A standard class C subnet (255.255.255 or /24) can contain 254 IP addresses. Some DICENTIS devices have 2 IP addresses. For this reason, Bosch advises to use 255.255.252.0 (or /22) as a subnet mask. This allows you to have 1018 IP addresses. The following table lists the number of IP address per DICENTIS device in a DICENTIS Conference System.

Device	IP addresses
DICENTIS server (optional Meeting Application)	1
Client PC running DICENTIS meeting application	1
DICENTIS Audio processor and powering switch	1
DICENTIS Powering switch	1
DICENTIS multimedia device	2
DICENTIS discussion device	1
DICENTIS discussion device select language	1
DICENTIS discussion device voting	1
DICENTIS discussion device extended	2
DICENTIS Interpreter desk	2
DCNM-IDESKVID Interpreter desk with video	3
ARNI-Enterprise	1
ARNI-Standard	1
IP camera	1

Device	IP addresses
SDI video switcher	1

Tab. 3.2: Nodes count of DICENTIS equipment

Maximum number of DICENTIS devices in a string:

- The max age timer should be set to 22 when RSTP is used for cable redundancy to prevent a defective cable or powering switch from influencing the system.
- Each time data hops from one switch to another, the age is increased by one. This timer can be reached or exceeded, because a daisy chain can be used to loop through the DICENTIS devices.
- This timer (or restriction) cannot be reached when there is no cable redundancy. This is because the power limitation will be reached before the max age restriction is reached.
- The timer can be reached when:
  - you use cable redundancy,
  - the system is incorrectly wired.

Multi subnet DICENTIS Conference System

The following figure illustrates a typical multi subnet DICENTIS Conference System with a total of 1200 DICENTIS devices.

- The system is divided over four (4) subnets, where two (2) subnets having a maximum of 400 DICENTIS devices and an OMN-ARNIS are connected.
- The system has one OMN-ARNIS installed in the first subnet with a maximum of 400 DICENTIS devices connected (Note that only one OMN-ARNIS is allowed within a multiple subnet DICENTIS Conference System).
- Subnet four (4): When using multiple subnets, make sure that all cameras needed to capture video of the seats are all connected to the same subnet.

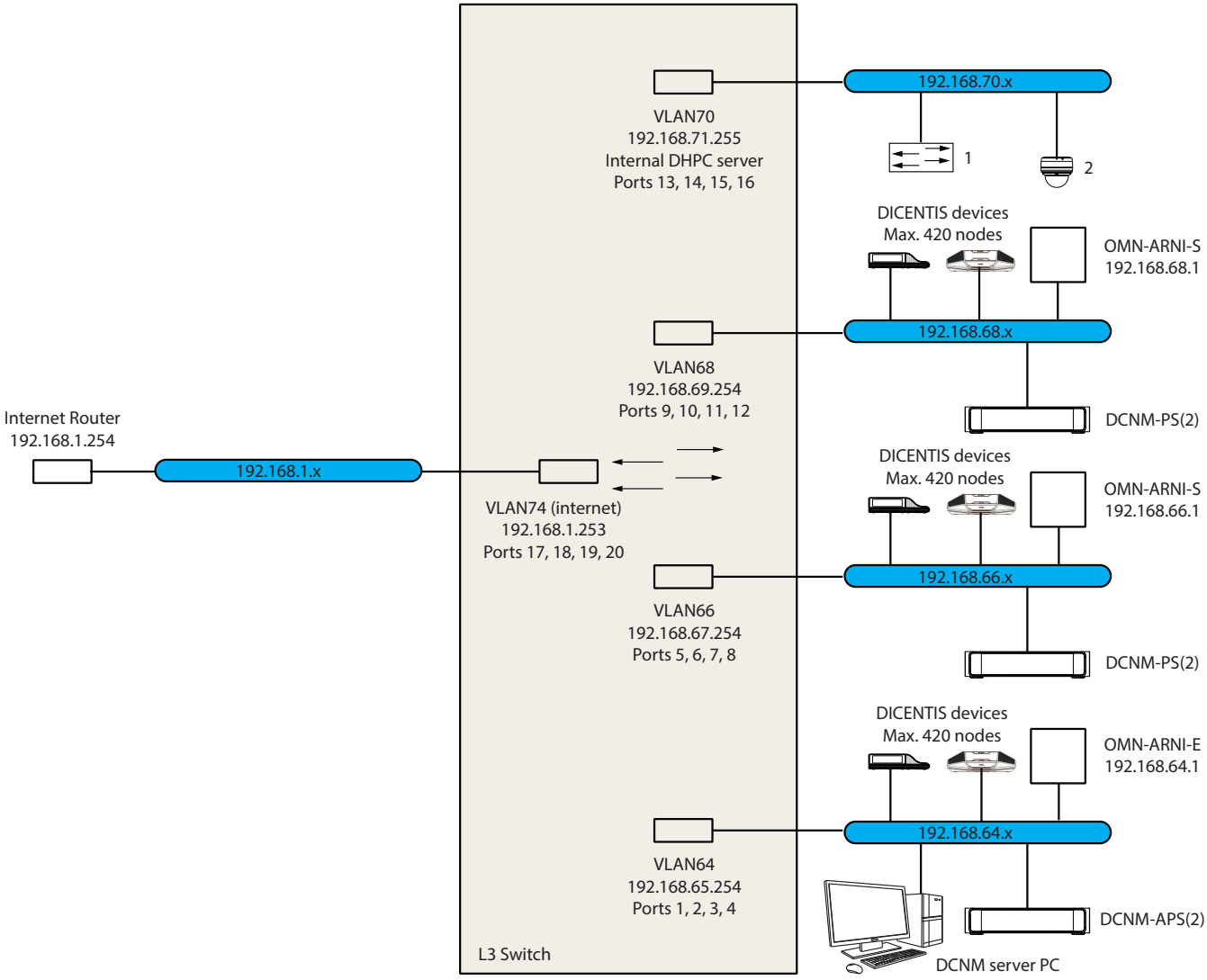

Figure 3.3: Typical DICENTIS Conference System with multiple subnets

- **1:** External video switcher.
- **2**: Dome camera.

4 System installation design and planning

Before you start to install system devices and connect system cabling, you should make a system design and planning:

- Familiarize yourself with the product and system capabilities.
- Make a cable (connection) plan:
  - Calculate the system network cable length.
  - Calculate the system power consumption.
  - Calculate the required power capacity of the system.

Notice!
The DICENTIS Conference System uses the RSTP protocol when redundant cabling mode is enabled. If the DICENTIS Conference System needs to be connected with the locally present network, please consult the local IT department before continuing with the installation design.

Notice!
Make sure that the cable lengths and power consumptions do not exceed the specifications. Not doing so will result in malfunctioning at any moment of the DICENTIS Conference System and products.

4.1 System capabilities

The capability of the DICENTIS Conference System and DICENTIS products depends on:

- The lengths of the system network cables.
- The number of connected devices.
- The system power supply capacity.

Cable length
System network cables (DCNM-CBxx-I) lengths (2, 5, 10 or 25 m) have a direct effect on the available power supply capacity. The longer the system network cable, the less power supply capacity is available to drive the connected devices. Therefore, choose the lengths of the system network cables carefully.

Notice!
Custom network cables must never exceed the maximum Ethernet specification of 100m (IEEE 802.3ab).
Keep your network hierarchy as flat as possible. This means having as few levels as possible. It is recommended not to exceed 7 levels. See the following example: 1: 1st level = Root switch, 2: 2nd level = switch, 3: 3rd level = switch.

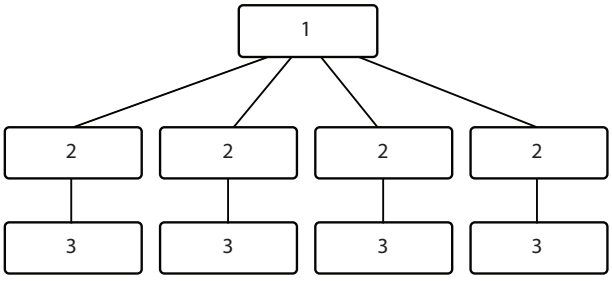

Figure 4.1: Example: Switch-levels

Power supply capacity

The total system network cable length and connected devices determine the required power supply capacity. The power within the DICENTIS Conference System is supplied by:

– The Audio processor and powering switch and the Powering switch, or
– Off-the-shelf PoE Ethernet switches.

Calculation tool

The calculation tool can be used to calculate the total power capacity of the system. This makes the design and planning of the DICENTIS Conference System easier. The calculation tool uses the power consumption of the devices and the system network cable lengths to calculate the needed system power supply capacity.
The calculation tool is on the DVD supplied with the Audio processor and powering switch and is part of the DICENTIS software DCNM.iso file. The DCNM.iso file can be downloaded from the Bosch website at: https://licensing.boschsecurity.com/software

4.2 Hardware requirements

Switches

The following minimum requirements and recommendations apply to switches used in a DICENTIS:

Requirement	Standard	Settings
Gbit Ethernet	IEEE802.3	Switch latency is maximally 10µSec with Gbit. Valid for both copper and/or fiber ports.
Packet forwarding in HW per port >1.2Mpps	n.a.	If SW is responsible for packet switching, this would result in variable latency which is unacceptable.
Quality of Service With strict priority	DiffServ	To make sure PTP synchronization packets and audio packets get priority over control packets. OMNEO uses QoS on IP level to avoid synchronization and audio problems on busy networks. Although the system does work without problems on relatively quiet networks (< 10% network load) it is important to configure your network switches correctly. The used QoS is Differentiated Services or DiffServ, which is part of the Type of Services field (ToS) in the IP header. For more details on DiffServ & IP header, see Wikipedia.

Warning: IEEE802.1p is also used for QoS, but is limited to layer 2. Since OMNEO uses IP communication, this mechanism is not suitable, so make sure the used equipment uses DiffServ QoS!

The table below gives an overview of the used **DSCP values** which need to be configured in the switch:

Data	DSCP dec	DSCP hex	DSCP Label	TOS byte (hex)	Switch Priority queue
PTP sync, delay req	56	0x38	CS7	0xE0	Highest
PTP follow-up, delay response, audio	46	0x2E	EF	0xB8	High
(reserved)	8	0x08	CS1	0x20	Low
Control	0	0x00	Best effort	0x00	None

Warning: Please check thoroughly if your switch's highest priority queue is label as #1 or e.g. #8, because this may differ per brand. Unfortunately this is not consistent over the different brands. Setting it wrong is worse than not having priority.

Switches must be configured to support DiffServ (DSCP) quality of service The switch needs to have 4 priority queues for the DiffServ mechanism to work.
Warning: Never use VOIP QoS settings!

Requirement	Standard	Settings
MAC table >1000	n.a.	To avoid the switch starts broadcasting unicast packets because it runs out of space.
Disable EEE	IEEE 802.3az	Most implementations of EEE cause problems because of implementation flaws. A good implementation should work, but does not save energy since the PTP synchronization avoids this. Therefore, EEE *must* always be disabled.
Disable RSTP (when no cable loops are used)		Rapid Spanning Tree Protocol (RSTP) is required when (cable) loops are created for redundancy. When no loops are created, RSTP needs to be *disabled* for optimal operation. When enabled, it can cause slow connections to the switch.
Possibility to create VLANS	n.a.	VLAN separation is recommended instead of IGMP snooping, because most switches are unable to handle the multicast changes in the system. Filtering multicast data may be necessary for some devices, such as 100 Mb devices (Sony cameras, TVOne, AMX, and others).
IGMPv3 IGMPv2 snooping in hardware		IGMPv3 or IGMPv2 snooping. To optimize bandwidth usage, IGMP snooping can be used. This is useful in systems with >10 multicast streams, although not absolutely required. Sufficient performance for handling a large number of IGMP query responses, depends on the number of (directly or indirectly) connected devices to that switch. Hardware support for IGMP snooping is strongly recommended.
Requirements when Redundant wiring is used	**Standard**	**Settings**
RSTP	IEEE802.1D-2004	RSTP is used to allow the creation of loops for redundancy. The switch must support changing the following parameters to the listed values: – Hello_Time = 9 seconds – Forwarding_delay = 30 seconds – Max_age = 22 seconds
Diagnostics		
Link Layer discovery	IEEE 802.1AB	For network diagnoses using Network Docent.
SNMP	SNMP	For network diagnoses using Network Docent.

Routers

The following minimal requirements apply to routers:

- 1 Gbit or higher Ethernet ports.
- Supports PIM-DM or Bidirectional PIM.
- Performs IP routing in hardware (i.e. a ‘layer 3 switch’) to minimize the routing delay.
- Packet forwarding rate > 1,000,000 packets per second per port (e.g. 8 Mpps for an 8-port router).
- Non-blocking backplane per switching port, i.e. 2 Gbit per port (e.g. 16 Gbps for an 8-port router).
- MAC address table of at least 1000 addresses per directly connected subnet.

4.3 Power supply capacity calculation plan

How to start

Notice!
It is advisable to use the power calculation tool. The calculation tool is on the DVD supplied with the Audio processor and powering switch and is also part of the DICENTIS software DCNM.iso file, which can be downloaded from the Bosch website at: https://licensing.boschsecurity.com/software

Decide how to supply power to the DICENTIS devices:
– Using the Audio processor and powering switch and one or more Powering switches.
– Using one or more PoE Ethernet switches.

If you want to use PoE Ethernet switches, continue with chapter *Calculation using PoE switches, page 24*.

See also
– *Calculation using DCNM-APS(2) or DCNM-PS(2), page 22*
– *Installation material and tools, page 31*

4.3.1 Calculation using DCNM-APS(2) or DCNM-PS(2)

Notice!
If you want to use customized cables, or a more accurate power supply capacity calculation plan is needed, you should use the power calculation tool.

To calculate the total power supply capacity:
1. Count all DICENTIS devices.
2. Know the exact location where the devices are installed.
3. Count each system network cable of the same length.

Device type	Power consumption (Watts)
DCNM-D	3.10
DCNM-DSL	3.60
DCNM-DVT	3.70
DCNM-DE	5.00
DCNM-MMD	11.30
DCNM-MMD2	12.00
DCNM-IDESK	15.00
DCNM-IDESKVID	18.00
DCNM-CB02-I	1.19
DCNM-CB05-I	2.43
DCNM-CB10-I	4.50

Device type	Power consumption (Watts)
DCNM-CB25-I	10.71

Tab. 4.3: Power consumption (Watts)

Ordering number	Cable lengths	
	m	**ft**
DCNM-CB02-I	2	6.56
DCNM-CB05-I	5	16.40
DCNM-CB10-I	10	32.81
DCNM-CB25-I	25	82.02

Tab. 4.4: Cable types and lengths

Rear view

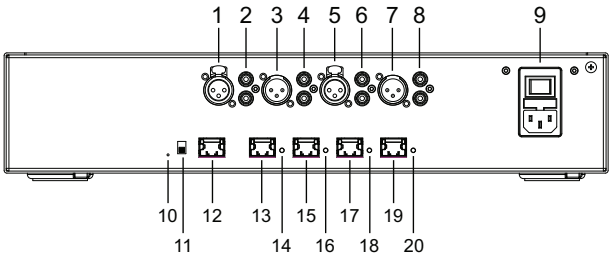

Figure 4.2: Audio processor and powering switch

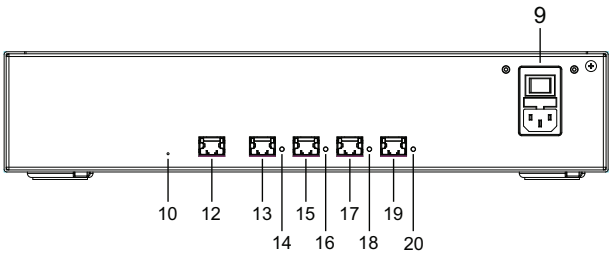

Figure 4.3: Powering switch

Item	Description
1, 5	XLR line outputs 1 and 2.
2, 6	RCA line outputs 1 and 2.
3, 7	XLR line inputs 1 and 2.
4, 8	RCA line inputs 1 and 2.
9	Mains inlet, mains switch and fuse holder.
10	Reset button.
11	Ground switch (grounded or floating).
12	Socket 1 without power.
13	Socket 2 low power.
15, 17, 19	Socket 3, 4, 5 high power.

Item	Description
14, 16, 18, 20	**Overload LED** for sockets 2-5: **Green**: Power OK. **Red**: Overload. Remove cable and wait a few seconds for the system to reset the overload.

Network and Power connector	Max. power output (W)	Max. devices
Socket 1 (12)	No power capacity	---
Socket 2 (13)	15	1
Socket 3 (15)	144	40
Socket 4 (17)	144	40
Socket 5 (19)	144	40

Tab. 4.5: Power supply capacity DCNM-APS(2) / DCNM-PS(2)

Calculation examples

The following example gives you an indication of the maximum load to each socket of an Audio processor and powering switch or Powering switch.

– **Socket 2**: 50 m cable + DCNM-MMD2 = **12 W**[1]
– **Socket 3**: 10 m cable + DCNM-MMD2 + 9x (2 m cable + DCNM-MMD2)
  = (4.5 + 12) + 9x(1.19 + 12) = **135.21 W**[2].
– **Socket 4**: 10 m cable + DCNM-D + 19x (2 m cable +DCNM-D)
  = (4.5 + 3.1) + 19x(1.19 + 3.1) = **89.11 W**[2].
– **Socket 5**: 10 m cable + DCNM-DE + 19x (2 m cable + DCNM-DE)
  = (4.5 + 5) + 19x(1.19 + 5) = **127.11 W**[2].

[1] For socket 2, the cable power consumption of the cable does not need to be counted if only one device is connected to this output.
[2] The shortest redundant cable does not need to be counted.

4.3.2 Calculation using PoE switches

Select one or more PoE Ethernet switches to supply power to the DICENTIS devices. Each DICENTIS device must be connected to an individual PoE enabled output of an Ethernet switch.

Notice!
Some PoE Ethernet switches can only supply power to a limited number of ports. Others can supply power to every port, but the total power the Ethernet switch can supply is limited. Please consult the documentation of the PoE Ethernet switch used.

Notice!
Using PoE, DICENTIS devices cannot be daisy-chained connected. Using PoE does not provide redundant cabling.

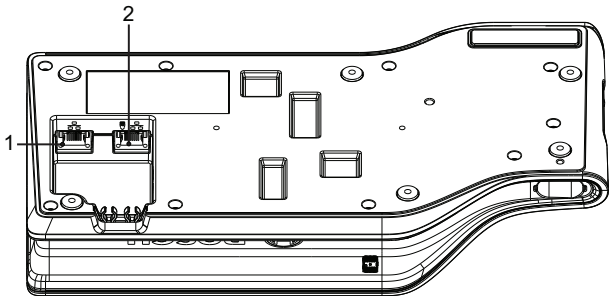

Figure 4.4: Bottom view DICENTIS devices (DCNM-MMD / DCNM-MMD2)

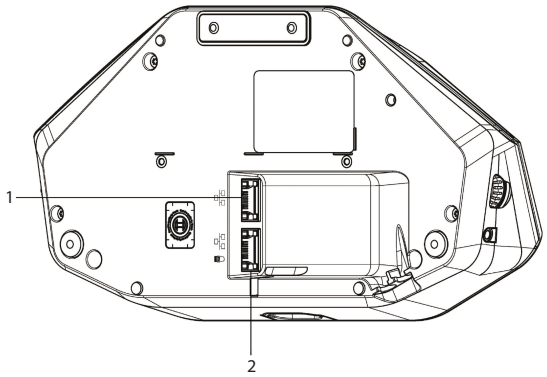

Figure 4.5: Bottom view DICENTIS devices (DCNM-D / DCNM-DVT / DCNM-DSL / DCNM-DE)

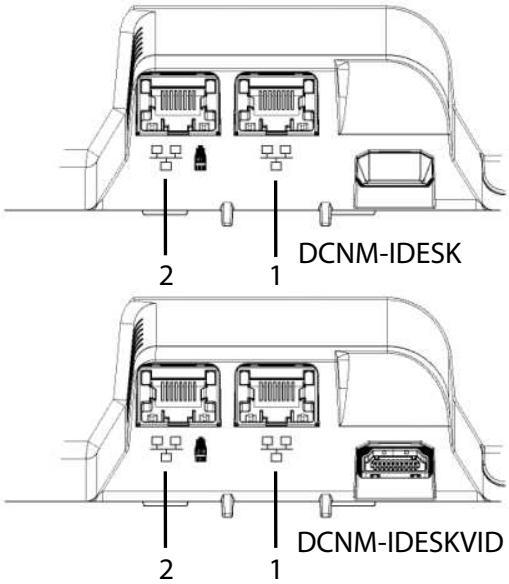

Figure 4.6: Bottom view DICENTIS Interpreter devices (DCNM-IDESK / DCNM-IDESKVID)

Item	Description
1	Network connector
2	Network / PoE connector

4.4 Redundancy options

DICENTIS Conference Systems can be created with network redundancy. This ensures that the system will continue to work if:
– a network cable is defective or accidentally disconnected.
– one of the components fails.

Different levels of redundancy can be created in the system depending on:
– the type of unit used in the system (DCNM-APS / DCNM-PS or DCNM-APS2 / DCNM-PS2)
– the number of redundant components used in the system.
– the amount of redundant network cabling.

The following sections explain the redundancy options that can be used when designing your DICENTIS Conference System. Each option can be combined in the DICENTIS Conference System, providing you observe the redundant cabling limitations. Refer to:
– *Redundant cabling for DCNM-APS/DCNM-PS units, page 27*.
– *Redundant cabling for DCNM-APS2/DCNM-PS2 units, page 28*.
– *Redundant server PC, page 30*.

Notice!
Rapid Spanning Tree Protocol (RSTP) must be enabled in the DICENTIS Conference System for these redundancy options to work correctly.

Notice!
Follow these steps when setting up redundancy options for your system:

1. First, set up your system without cable redundancy and RSTP configuration in the system and DICENTIS.
2. Secondly, configure RSTP in the switches and DICENTIS.
3. Thirdly, enable the cable loops.

4.4.1 Redundant cabling for DCNM-APS/DCNM-PS units

This section describes how to create redundant cabling for DCNM-APS or DCNM-PS units. The maximum number of Ethernet devices in the loop (including the root switch) is 22. In a system with no Ethernet switch(es), the APS is the root switch.

The total number of devices allowed in a loop depends on:

- The type of device connected in the loop (for example, DCNM-MMD2 devices consume more power than DCNM-DE devices).
- The length of the loop (cable also consumes power).

The figure shows how to calculate the number of devices in the loop. The red line shows the largest loop. The # sign shows the way the devices are counted.

In the example below up to 21 (22 - 1 = 21) discussion devices can be connected.

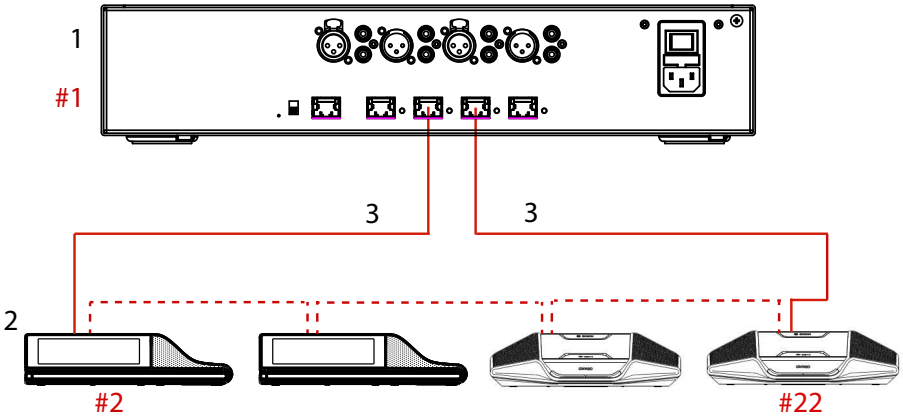

Figure 4.7: DICENTIS devices connected with redundant cabling to the same DCNM-APS / DCNM-PS type unit

1: DCNM-APS or DCNM-PS.

2: DICENTIS devices.

3: DICENTIS cabling (redundant loop).

Cabling possibilities (DCNM-APS/DCNM-PS)	Limitations/requirements
Connect the DICENTIS devices in a daisy chain configuration from a high power socket on a DCNM-PS or DCNM-APS to another high power socket on the same DCNM-PS or DCNM-APS.	The redundancy is for cable only. If the DCNM-PS or DCNM-APS fails, all DICENTIS devices connected to that unit will also fail. If a single DICENTIS device fails, the other DICENTIS devices in the daisy chain will continue to work. To enable redundancy, Rapid Spanning Tree Protocol (RSTP) must be enabled.
You can use any of the high power sockets (3, 4, or 5) to create the daisy chain.	The redundant loop must be connected to the same DCNM-APS or same DCNM-PS.

See also

- *Power supply capacity calculation plan, page 22*

4.4.2 Redundant cabling for DCNM-APS2/DCNM-PS2 units

This section describes how to create redundant cabling for DCNM-APS2 / DCNM-PS2 type units. The maximum number of Ethernet devices in the largest possible loop (including the root switch) is 22. In a system with no Ethernet switch(es), the APS is the root switch.
The total number of devices allowed in a loop depends on:

- The type of device connected in the loop (for example, DCNM-MMD2 devices consume more power than DCNM-DE devices).
- The length of the loop (cable also consumes power).

The figure shows how to calculate the number of devices in the loop. The red line shows the largest loop. The # sign shows the way the devices are counted.
In the example below up to 19 (22 - 3 = 19) discussion devices can be connected.

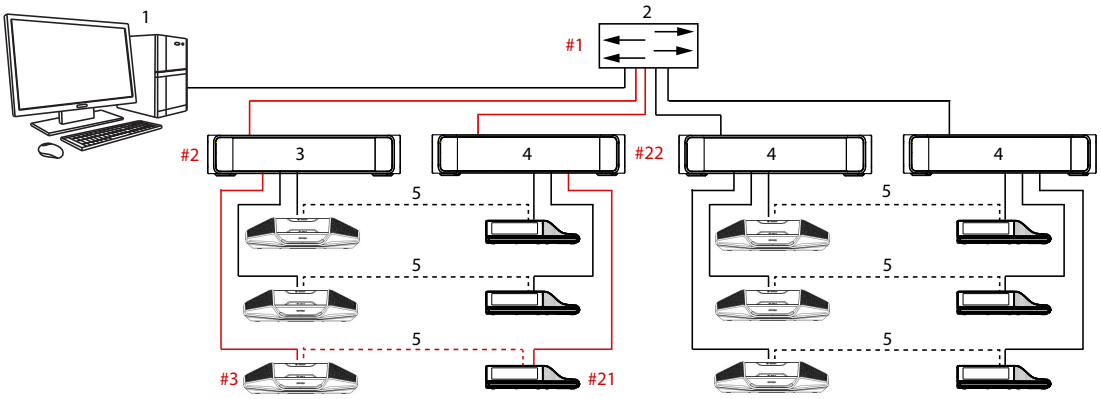

Figure 4.8: DICENTIS discussion devices connected with redundant cabling between DCNM-PS2 / DCNM-APS2 type units

1: DICENTIS system/client PC.
2: Network switch (with optional redundant power supply)
3: DCNM-APS2
4: DCNM-PS2
5: DICENTIS cabling (redundant loop)

Cabling possibilities (DCNM-APS2/DCNM-PS2)	Limitations/requirements
Create a redundant loop by connecting the DICENTIS devices in a daisy chain configuration from a high power socket on a DCNM-PS2 / DCNM-APS2 to a high power socket on another DCNM-PS2. The redundant loop between two DCNM-PS2 units is for power and signal. If one of the DCNM-PS2 units fails, the other DCNM-PS2 unit will supply power and signal to the DICENTIS devices in the daisy chain.	The redundancy is for cable only. If the DCNM-PS or DCNM-APS fails, all DICENTIS devices connected to that unit will also fail. To enable redundancy: – Rapid Spanning Tree Protocol (RSTP) must be enabled in the DICENTIS Conference System. – a network switch with redundant power supply, should be connected to the DCNM-PS2 / DCNM-APS2 units, as shown in the previous figure.

Cabling possibilities (DCNM-APS2/DCNM-PS2)	Limitations/requirements
You can use any of the high power sockets (3, 4, or 5) on either of the DCNM-PS2 units to create the daisy chain/redundant loop. For example, high power socket 3 on one unit can be connected to high power socket 4 on another unit.	**Note**: The redundant loop must be connected to another DCNM-PS2 type unit. You cannot use DCNM-PS / DCNM-APS type units to create redundant loops for power.
You can create a redundant loop for signal only, by connecting the DICENTIS devices in a daisy chain configuration to the same DCNM-PS2 or DCNM-APS2, although this is not recommended. The DCNM-PS2 unit is designed to reduce cost of ownership, for example, by allowing a maximum of three redundant loops to be connected between two DCNM-PS2 units.	The redundant loop will function in the same way as a DCNM-PS / DCNM-APS type unit. Refer to *Redundant cabling for DCNM-APS/ DCNM-PS units, page 27*.

Notice!
Rapid Spanning Tree Protocol (RSTP) must be enabled in the DICENTIS Conference System for these redundancy options to work correctly.

See also

– *Power supply capacity calculation plan, page 22*

4.4.3 Redundant server PC

System availability can be improved by connecting a redundant DICENTIS server PC and the associated components and cables to the DICENTIS Conference System. The maximum number of Ethernet devices in the largest possible loop (including the root switch) is 22.
The total number of devices allowed in a loop depends on:

- The type of device connected in the loop (for example, DCNM-MMD2 devices consume more power than DCNM-DE devices).
- The length of the loop (cable also consumes power).

The figure shows how to calculate the number of devices in the loop. The red line shows the largest loop. The # sign shows the way the devices are counted.
In the example below up to 17 (22 - 5 = 17) devices can be connected.

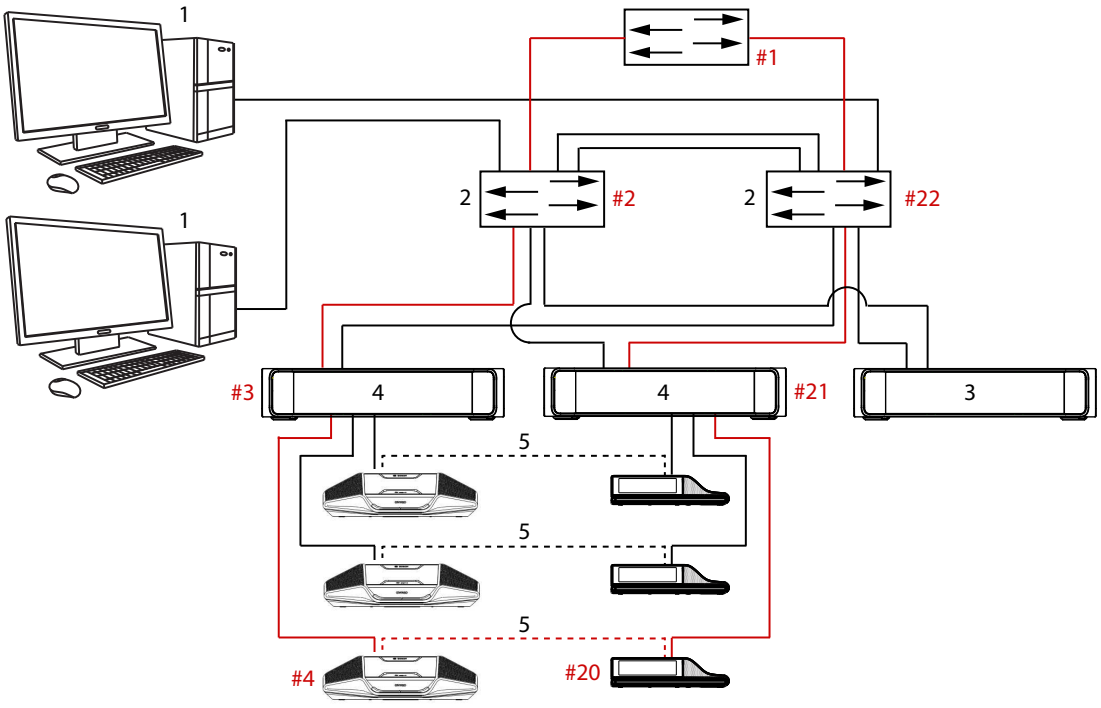

Figure 4.9: Redundant DICENTIS server PC with redundant components and cables

1: DICENTIS system/client PC
2: Network switch (with optional redundant power supply)
3: DCNM-APS2
4: DCNM-PS2
5: DICENTIS cabling (redundant loop)

For this option to work the DICENTIS Conference System has to be run in combination with EverRun Enterprise software from Stratus Technologies. For more information, refer to the Stratus Technologies website.
Other options that can be used for guaranteeing the reliability of the DICENTIS Conference System include:

- Remote SQL servers.

5 Installation material and tools

This section describes installation material such as cables, connectors and tools.

Recommedations

- Always use manufacturer specified installation products, materials and tools.
- In general, use different cable ducts for the system network cables, audio cables and mains supply cables.
- In public areas where people can touch or move above the connectors and cables, use metal protection covers.

Warning!
Do not exceed the bend limitations of system network cables (DCNM-CBxxx):
The minimum bend radius of the system network cable is a 35 mm radius.

5.1 DICENTIS System Cable Assemblies

The DICENTIS System Cable Assemblies, terminated with connectors on both ends, are available in different lengths and are used to connect DICENTIS devices to each other. The cable consists of a low smoke zero halogen solid core.

Ordering number	Cable lengths	
	m	**ft**
DCNM-CB02-I	2	6.56
DCNM-CB05-I	5	16.40
DCNM-CB10-I	10	32.81
DCNM-CB25-I	25	82.02

Tab. 5.6: Cable types and lengths

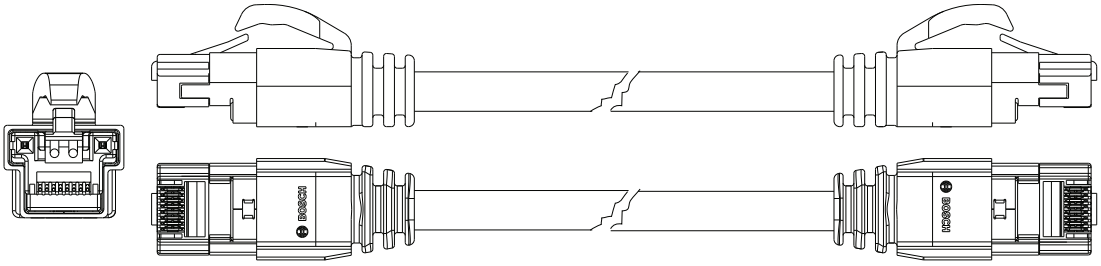

Figure 5.1: DCNM-CBxx-I cable and connector view

5.2 DCNM-CBCON Connectors for DICENTIS cable

The connectors are used to make your own system network cables or to replace a connector. The cable can be used for solid core cable (DCNM-CB02-I, DCNM-CB05-I, DCNM-CB10-I, DCNM-CB25-I, DCNM-CB250-I, DCNM-CB250), as well as stranded core cable (DCNM-CB02, DCNM-CB05, DCNMCB10, DCNM-CB25, DCNM-CB02B, DCNM-CB05B, DCNM-CB10B, DCNM-CB25B, DCNM-CB250B).

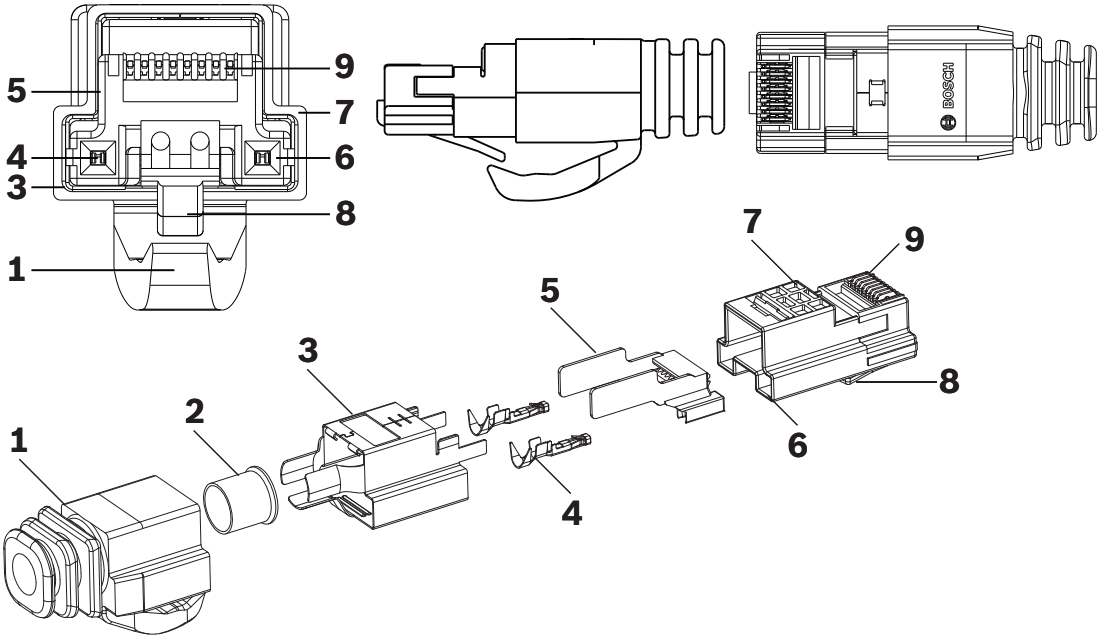

Figure 5.2: DCNM-CBCON Front and exploded view

Item	Description
1	Strain relief boot
2	Ferrule
3	Plug connector shield
4	Power contacts (Qty: 2)
5	Load bar
6	Power contact cavity (2 places)
7	Housing
8	Locking latch
9	Signal contact cavity (8 Places)

See also

– *DICENTIS System Cable Assemblies, page 31*
– *DCNM-CB250-I System Installation Cable, page 34*
– *DCNM-CBTK System Network Cable Toolkit, page 33*

5.3 DCNM-CBTK System Network Cable Toolkit

The system network cable toolkit is used to connect the *DCNM-CBCON Connectors for DICENTIS cable, page 32* to the *DCNM-CB250-I System Installation Cable, page 34* or *DICENTIS System Cable Assemblies, page 31*.

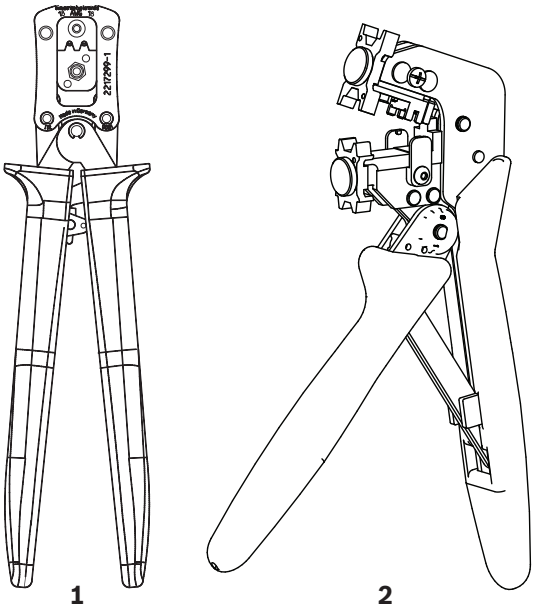

Item	Description
1	Power wiring tool.
2	Signal wiring tool.

Tab. 5.7: Toolkit content

Notice!
Please consult the “custom length for system network cables” section on the DVD, which can be downloaded at: https://licensing.boschsecurity.com/software

5.4 DCNM-CB250-I System Installation Cable

The system installation cable, without connectors, is available in a length of 250 meters and is used for making your own system network cable. Refer also to the sections *DCNM-CBCON Connectors for DICENTIS cable, page 32* and *DCNM-CBTK System Network Cable Toolkit, page 33*.

Notice!
The maximum system network cable length is: 100 m / 328,9 ft.

Notice!
Please consult the “custom length for system network cables” section on the DVD, which can be downloaded at: https://licensing.boschsecurity.com/software

See also

– *DCNM-CBCON Connectors for DICENTIS cable, page 32*

5.5 DCNM-CBCPLR Cable couplers

Cable couplers can be used:
- to extend cables,
- in a floor pod as break-out box,
- as an interface between DICENTIS cable and “standard” CAT-5E cable combined with a separate power cable,
- to insert power locally to the participant devices,
- to switch the system on by using two cable couplers and a switch.

Cable couplers are delivered in a box that contains 6 cable couplers. They can be used for all types of DICENTIS cables.

5.5.1 Using a cable coupler to extend a cable

The DICENTIS Cable coupler can be used to extend cables, as it allows you to connect DICENTIS Cable assemblies together. This way, it is possible to connect, for example, three 25 m (DCNM-CB25-I) cables together to form a 75 m cable.

Note:
- The cable length is not allowed to exceed 100 m.
- No more than 2 cable couplers can be used in one trunk.

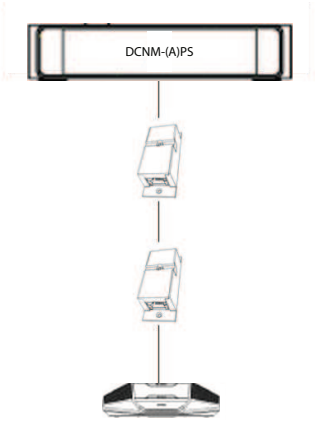

5.5.2 Using a cable coupler as a break-out box

The DICENTIS Cable coupler can be used in a floor pod as a break-out box, for example, if you want to connect temporary devices like a rostrum microphone. The cable coupler can be fixated using the screw holes (2.5 mm) or via a tie wrap through the recessed area.

Note:
- The cable length is not allowed to exceed 100 m.
- No more than 2 cable couplers can be used in one trunk.

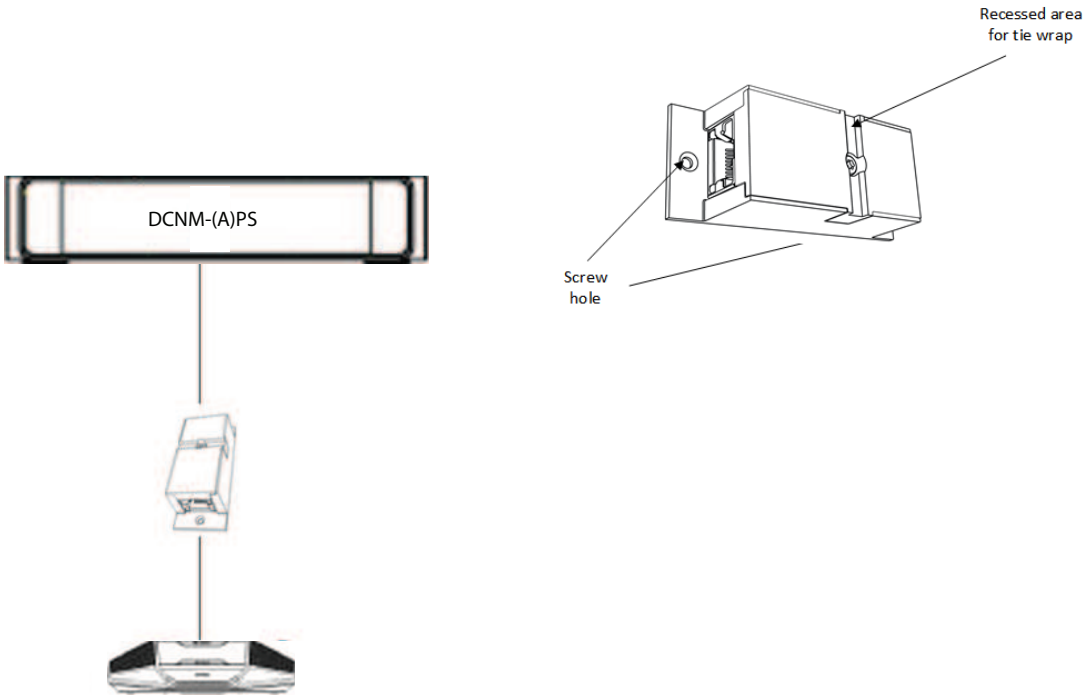

Installation in a floor pod as break-out box

5.5.3 Using a cable coupler as an interface between different types of cable

The cable coupler can be used as an interface between DICENTIS cable and “standard” CAT-5E cable, optionally combined with a separate power cable. This can be used, for example, when standard CAT-5E cabling coming from the technical room has to be connected with DICENTIS cable in the conference room.

To set this up:

1. Open the housing of the cable coupler.
2. Connect the power cables to the screw terminals + and -.
3. Remove the break-out of the housing to guide the power cables through.
4. Create a tension release.

Warning!

Risk of electric shock. Exposed power cables are a potential hazard. Make sure all power cables are securely fastened by fixing them with a tie wrap on the inside of the box (see drawing ‘Creating a tension relief’).

5. Close the housing and fix the screw with torque 0.4 Nm.

Note:

– The cable length is not allowed to exceed 100 m.
– No more than 2 cable couplers can be used in one trunk.