5 Installation material and tools

This section describes installation material such as cables, connectors and tools.

Recommedations

- Always use manufacturer specified installation products, materials and tools.
- In general, use different cable ducts for the system network cables, audio cables and mains supply cables.
- In public areas where people can touch or move above the connectors and cables, use metal protection covers.

Warning!

Do not exceed the bend limitations of system network cables (DCNM-CBxxx):

The minimum bend radius of the system network cable is 50 mm radius.

5.1 System Network Cable

The system network cables, terminated with connectors on both ends, are available in different lengths and are used to connect DICENTIS devices to each other. The cable consists of four CAT-5e twisted pairs to transmit data and two copper wires to supply the power.

Ordering number	Cable lengths	
	m	ft
DCNM-CB02	2	6.56
DCNM-CB05	5	16.40
DCNM-CB10	10	32.81
DCNM-CB25	25	82.02

Table 5.1: Cable types and lengths

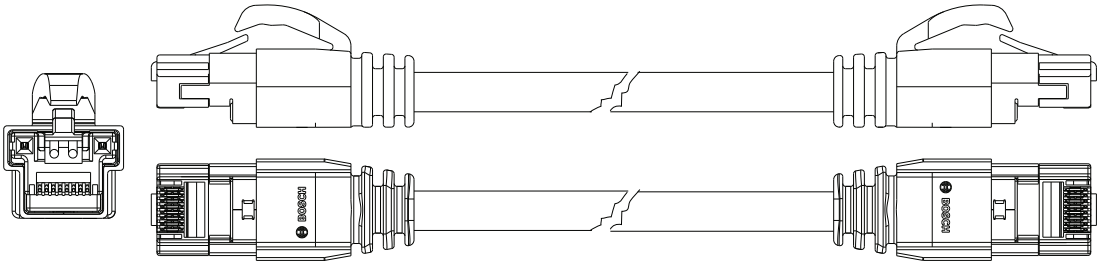

Figure 5.1: DCNM-CBxx cable and connector view

5.2 System Cable Connectors

The connectors are used to make your own system network cables or to replace a connector. Two types of system cable connectors are available: *DCNM-CBCON-I Installation Cable Connectors, page 28* and *DCNM-CBCON-N Network Cable Connectors, page 28*.

Caution!
Both connector types look similar but are different! So, only use the right type of connector with the right type of system cable.

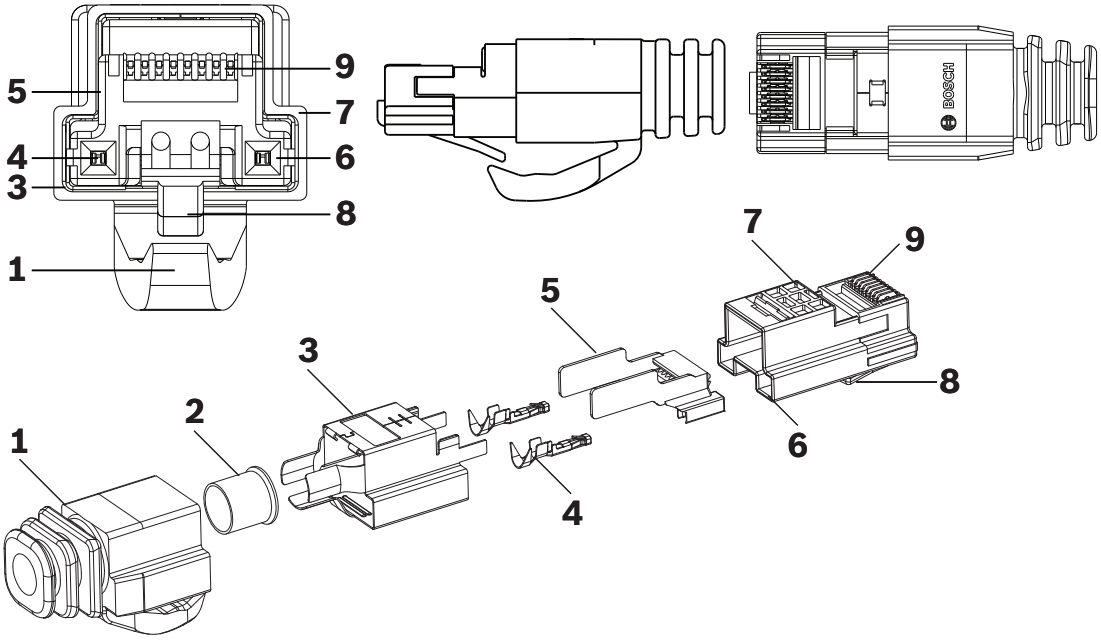

Figure 5.2: DCNM-CBCON Front and exploded view

Item	Description
1	Strain relief boot
2	Ferrule
3	Plug connector shield
4	Power contacts (Qty: 2)
5	Load bar
6	Power contact cavity (2 places)
7	Housing
8	Locking latch
9	Signal contact cavity (8 Places)

See also

- *System Network Cable, page 26*
- *DCNM-CB250 System Installation Cable, page 30*
- *DCNM-CBTK System Network Cable Toolkit, page 29*

5.2.1 DCNM-CBCON-I Installation Cable Connectors

The DICENTIS 50 Installation Cable Connectors DCNM-CBCON-I can only be used with the the *DCNM-CB250 System Installation Cable, page 30* by using the *DCNM-CBTK System Network Cable Toolkit, page 29*.

5.2.2 DCNM-CBCON-N Network Cable Connectors

The DICENTIS 50 Network Cable Connectors DCNM-CBCON-N can only be used with the *System Network Cable, page 26* by using the *DCNM-CBTK System Network Cable Toolkit, page 29*.

5.3 DCNM-CBTK System Network Cable Toolkit

The system network cable toolkit is used to connect the *System Cable Connectors, page 27* to the *DCNM-CB250 System Installation Cable, page 30* or *System Network Cable, page 26*.

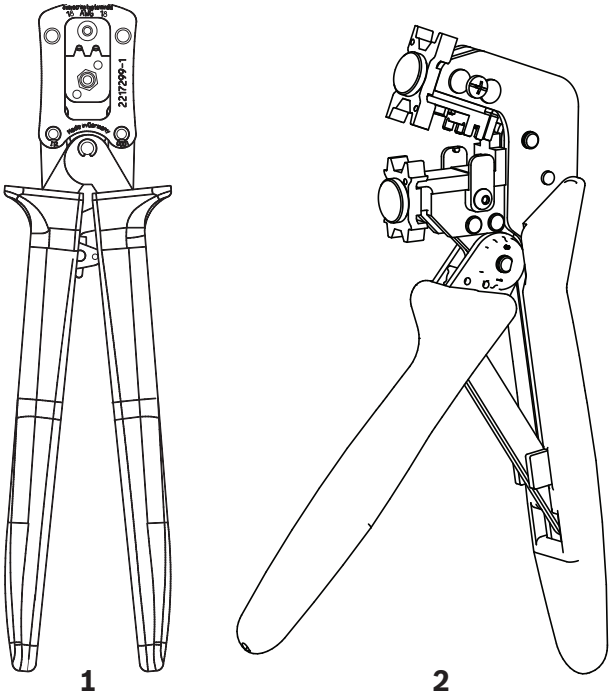

Item	Description
1	Power wiring tool.
2	Signal wiring tool.

Table 5.2: Toolkit content

Notice!
Please consult the “custom length for system network cables” section on the DVD, which can be downloaded at: https://licensing.boschsecurity.com/software

5.4 DCNM-CB250 System Installation Cable

The system installation cable, without connectors, is available in a length of 250 meters and is used for making your own system network cable. Refer also to the sections *System Cable Connectors, page 27*, *DCNM-CBCON-I Installation Cable Connectors, page 28* and *DCNM-CBTK System Network Cable Toolkit, page 29*.

Notice!
The maximum system network cable length is: 100 m / 328,9 ft.

Notice!
Please consult the “custom length for system network cables” section on the DVD, which can be downloaded at: https://licensing.boschsecurity.com/software

See also
– *System Cable Connectors, page 27*

6 Mechanical installation of Central Equipment

6.1 Audio Powering Switch and Powering Switch

The Audio Powering Switch is used:

- to control system audio signals,
- to route audio signals to/from devices,
- to supply power to devices,
- as an Ethernet switch to connect the PC and DICENTIS devices (DCNM-D / DCNM-DVT / DCNM-DSL / DCNM-DE / DCNM-MMD / DCNM-MMD2).

The Powering Switch is used to:

- supply power to devices.

Scope of delivery

The Audio Powering Switch and Powering Switch are shipped with the following parts:

- 1x Mains power cord.
- 1x Safety instructions.
- 1x Set of 19 inch mounting brackets.
- 4x bottom feet.
- 1x DVD containing manuals and software (only with Audio Powering Switch).

Front view

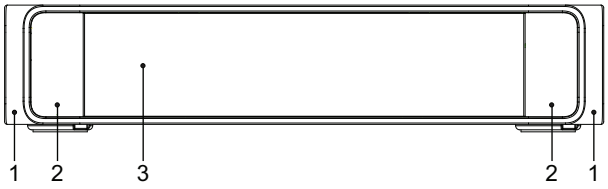

Figure 6.1: Audio Powering Switch / Powering Switch

Item	Description
1	19“ mounting brackets.
2	Ventilation inlet.
3	**Indication LED:** **Off**: Switched off. **Green**: Switched on. **Amber**: Standby. **Blinking**: Services on the server PC are not running. **Alternating green amber**: When a software download is required.

Rear view

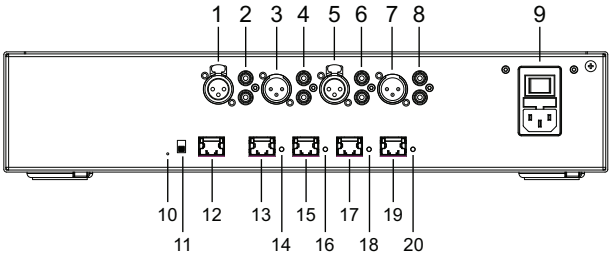

Figure 6.2: Audio Powering Switch

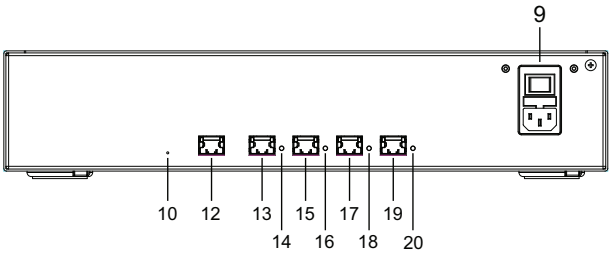

Figure 6.3: Powering Switch

Item	Description
1, 5	XLR line outputs 1 and 2.
2, 6	RCA line outputs 1 and 2.
3, 7	XLR line inputs 1 and 2.
4, 8	RCA line inputs 1 and 2.
9	Mains inlet, mains switch and fuse holder.
10	Reset button.
11	Ground switch (grounded or floating).
12	Socket 1 without power.
13	Socket 2 low power.
15, 17, 19	Socket 3, 4, 5 high power.
14, 16, 18, 20	**Overload LED** for sockets 2-5: **Green**: Power OK. **Red**: Overload. Remove cable and wait a few seconds for the system to reset the overload.

How to install

1. Install the Audio Powering Switch or Powering Switch in a 19 inch device rack system or on a flat surface. Two 19 inch mounting brackets and four bottom feet are supplied with the Audio Powering Switch and Powering Switch. Refer to the following illustration.
2. Connect all required cabling.
3. Connect the mains supply.

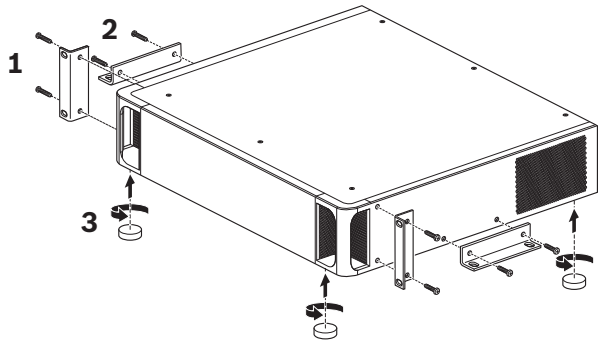

Figure 6.4: 19 inch rack, flat surface and feet mounting

Item	Description
1	19 inch rack mounting (bracket)
2	Flat surface mounting (bracket)
3	Feet mounting

Notice!
The unit extends 30 mm in front of the 19” mounting brackets when installed in a 19” rack system.

Caution!
Do not obstruct the airflow vents on the front side and rear left and right sides.

7 Mechanical installation of Contribution Devices

7.1 DICENTIS devices

The DICENTIS devices (DCNM-D, DCNM-DVT, DCNM-DSL, DCNM-DE, DCNM-MMD, DCNM-MMD2) are used to:

– participate in a meeting or conference.
– monitor and control a meeting or conference (chairperson use, depending on the configuration).

DCNM-MMD / DCNM-MMD2

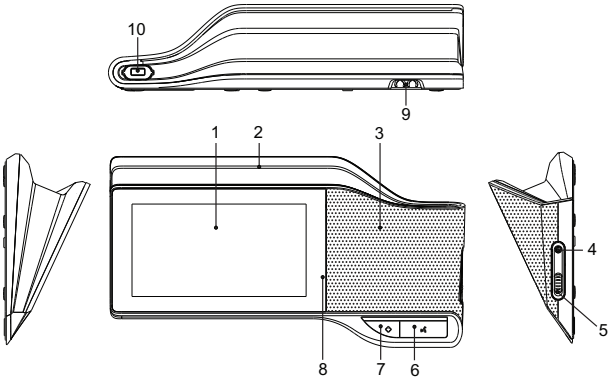

Figure 7.1: Front, top, rear and side views

Item	Description
1	7” capacitive touch screen.
2	LED strip.
3	Two-way loudspeaker.
4	3.5 mm stereo jack for headphone or headset with integrated microphone.
5	Headphone volume control.
6	Microphone request button.
7	Chairperson priority or microphone mute button.
8	Near Field Communication (NFC) reader (DCNM-MMD2 only).
9	Cable guides.
10	Microphone input connector.

DCNM-D / DCNM-DVT / DCNM-DSL / DCNM-DE

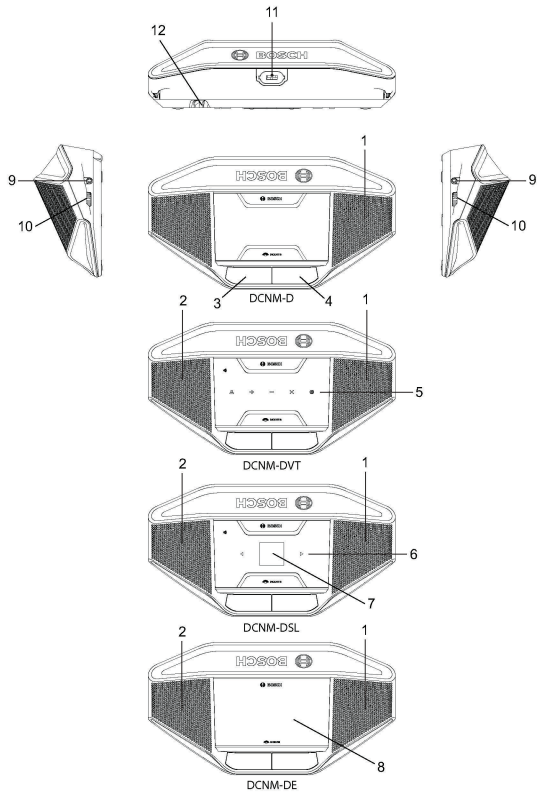

Figure 7.2: Front, top, rear and side views

Item	Description
1	Two-way loudspeaker.
2	Near Field Communication (NFC) reader.
3	Chairperson priority button, microphone mute button, or microphone request button for second participant.
4	Microphone request button.
5	Voting buttons.
6	Language selection buttons.
7	Language display.
8	4.3” capacitive touch screen.
9	3.5 mm stereo jack for headphone or headset with integrated microphone.
10	Headphone volume control.
11	Microphone input connector.
12	Cable guides.

Connecting DICENTIS devices

The DICENTIS Conference System can be quickly and easily configured as a daisy-chain configuration or as a star configuration:

– **Daisy-chain configuration**: Uses dedicated cabling, consisting of CAT-5e cables including two additional power conductors (see *Typical system setup, page 8*).
– **Star configuration**: Each DICENTIS device is connected with an individual standard CAT-5e cable. An Ethernet switch is also required for providing Power over Ethernet (PoE).

Notice!

When Power over Ethernet is used, DICENTIS devices cannot be daisy-chained.

The star configuration makes use of connectors underneath the devices, ensuring for a neat, tidy system installation, especially advantageous for TV coverage.

To connect the system network cables to the DICENTIS devices (refer to the following figure):

1. Insert the system network cable/connector (**2**).
2. Lead the system network cable through the cable guides (**3**).

Installing DICENTIS devices

The DICENTIS devices can be free-standing or fixed in more permanent installations using mounting screws.

1. The distance between the centres of the screw inserts (**1**) on the bottom is 100 mm.
2. Use M4 type of screws with a device screw insert length of maximum 5 mm when attaching the device to the bottom of the recess (**1**).

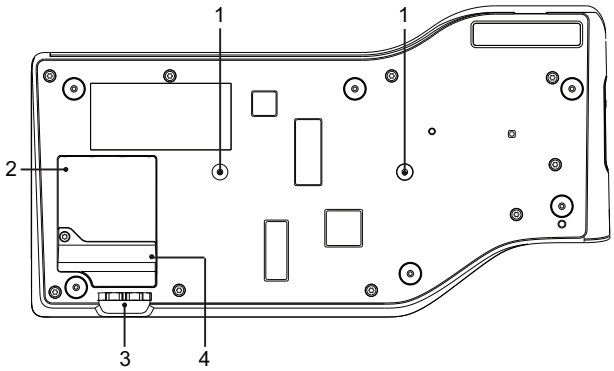

Figure 7.3: Bottom view discussion DICENTIS devices (DCNM-MMD / DCNM-MMD2)

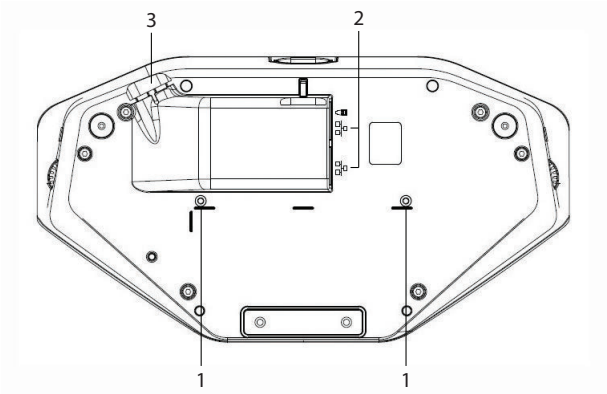

Figure 7.4: Bottom view DICENTIS devices (DCNM-D / DCNM-DVT / DCNM-DSL / DCNM-DE)

Item	Description
1	Screw insert for fixed installation.
2	2x RJ45 connection input/output for system power cable.
3	Cable guides.
4	USB connector, for future use (DCNM-MMD / DCNM-MMD2 only).

See also

– *System Network Cable, page 26*
– *DCNM-CB250 System Installation Cable, page 30*

7.2 DICENTIS Microphones

Both the DCNM-HDMIC High Directive Microphone and DCNM-MICL/S Stem Microphone are typically used with the DICENTIS devices.

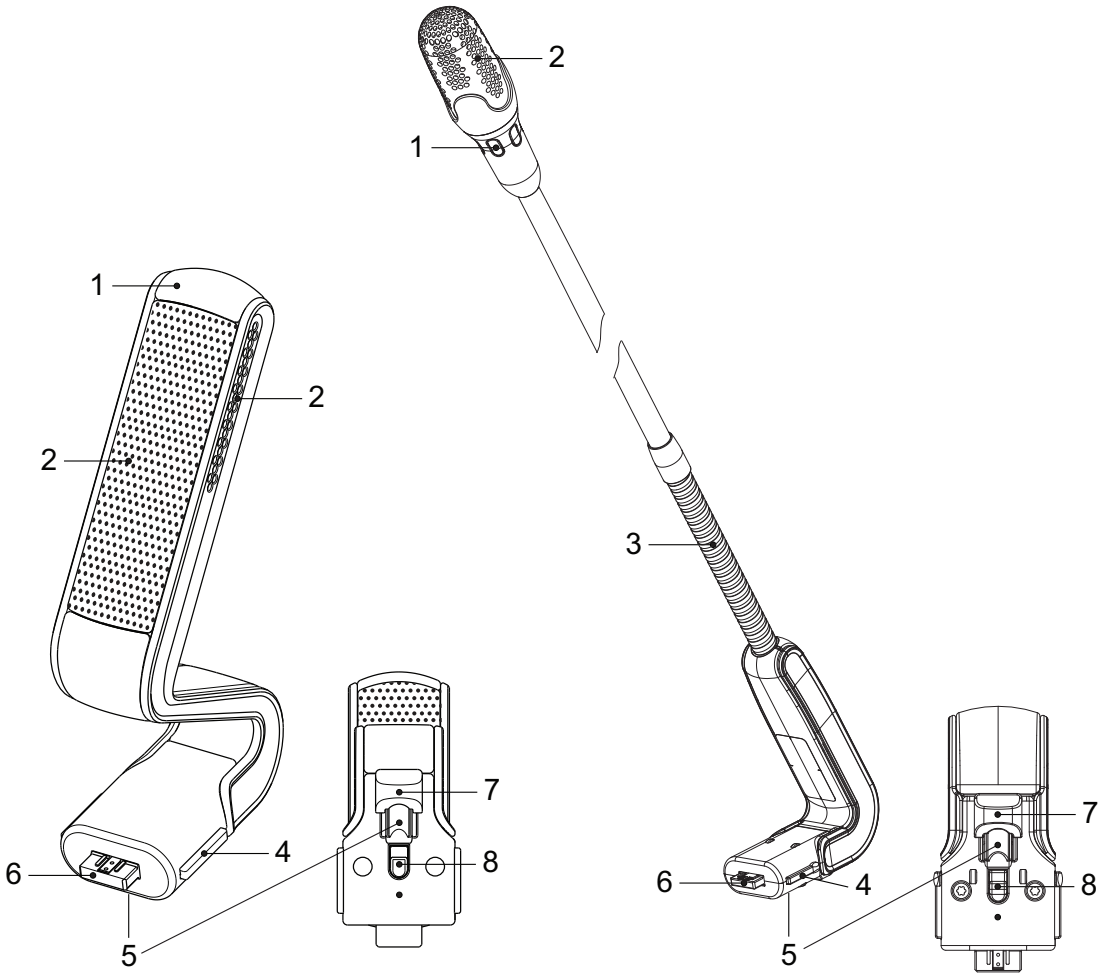

Figure 7.5: DCNM-HDMIC and DCNM-MICS / DCNM-MICL front and bottom view

Number	Description
1	LED indicator.
2	Microphone grill.
3	Adjustable stem (DCNM-MICS / DCNM-MICL).
4	Connection guidance.
5	Slider guidance.
6	Connector plug.
7	Lock-slider for lock release (Press and shift to release).
8	Lock.
9	Device female connector (see following figure).

How to connect or remove the microphone

The microphone can be easily connected to the DICENTIS devices:

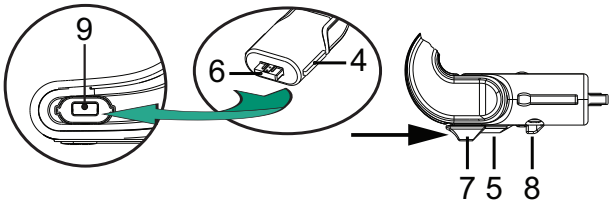

Figure 7.6: DCNM-HDMIC or DCNM-MICS / DCNM-MICL connection

To do so:

1. Gently guide the connection guidance (**4**) into the DICENTIS device microphone connector (**9**).
2. Gently push the connector plug (**6**) into the device microphone connector (**9**) until the connection lock (**5**) fits/click into place.
3. To remove the microphone from the device: Shift lockslider (**7**) towards the device and hold in place lock release (**8**) and pull out the microphone.

See also

– *DICENTIS devices, page 34*

7.3 DCNM-MMDSP Anti-reflection foil

The DICENTIS anti-reflection foil can be used to protect the tempered glass screen of a DICENTIS multimedia Device.

Installation procedure

1. Use the included alcohol swab and the microfiber fabric to clean the device LCD screen before installation.
2. Peel the positioning adhesive release paper from the rear of anti-reflection foil.
3. Position the anti-reflection foil on the device LCD screen, and then fix the positioning adhesive to the side of the device.
4. Open the anti-reflection foil, and use the “cleaning stick” to clean surface dust from the LCD screen.
5. Peel the protective film from the other side of the anti-reflection foil.
6. Lightly press the anti-reflection foil on to the LCD screen. If air bubbles are trapped under the anti-reflection foil, use the “squeegee” to remove them.

7.4 DCNM-NCH Name Card Holder

The name card holder (**1**) can be used to permanently display the participant’s name on the rear of a DICENTIS multimedia Device. The name card holder has two magnets (**2**) that allow it to be easily attached to, and removed from, the rear of the device.

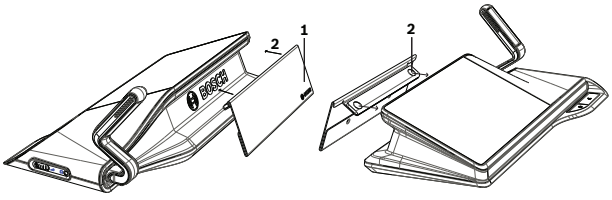

Figure 7.7: DCNM-NCH assembly

Item	Description
1	Name card holder.
2	Magnets.

Notice!
A paper insert template is included on the DVD that can be downloaded at: https://licensing.boschsecurity.com/software

8 Installation Test

An installation test is needed to prevent connection mismatches and find potential product defects at an early stage. Not to do so could result in a system malfunctioning.
Each DICENTIS device has its own built-in diagnostics, which can be used for faultfinding. The diagnostics starts as soon the DICENTIS device is powered on. The DICENTIS Conference System does not have to be configured with, and connected to, the system controller PC.

Preconditions

1. All system network cables are connected to the devices.
2. The Audio Powering Switch and Powering Switch(es) are installed.

Start the test

Power on the Audio Powering Switches and Powering Switches used in the system: Each connected device powers on and initializes.

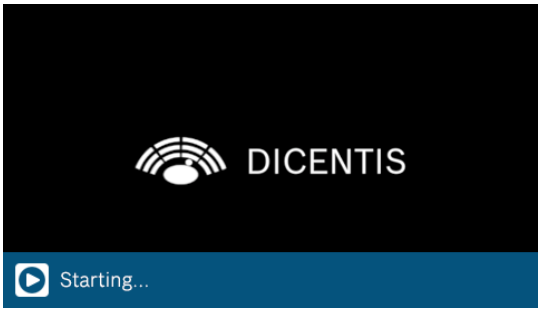

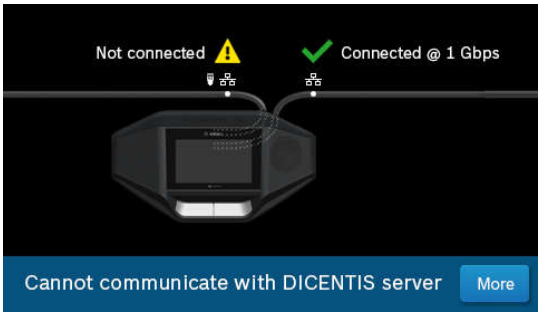

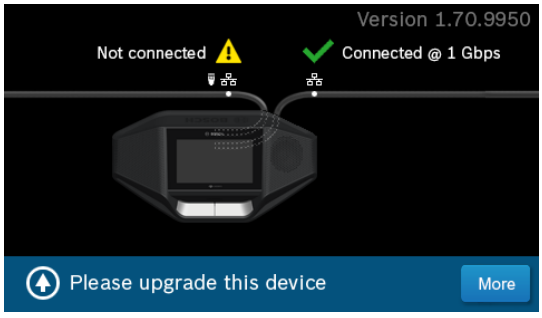

1. After the DICENTIS multimedia Device and the DICENTIS discussion Extended have initialized, the diagnostic screen is shown.
2. If the text “Link down” is shown:
   - The network cable is not connected or defective.
   - The device is only connected with one system network cable (“Link down” is shown on the side where the device is not connected).
3. If the system network cable is correctly connected to the network, the network speed is shown.
4. If the DICENTIS multimedia Device and the DICENTIS discussion Extended are connected to an Audio Powering Switch, Powering Switch or another multimedia device, and 100 Mb is shown:
   - Not all wiring inside the system network cable connector is correctly connected or broken. You need to check the wiring and connector.
   - If the cable is connected to a 100 Mb switch, it is correct.
5. Click the info button to see additional information of the multimedia device.
6. When everything is correctly connected, and the device does not have the application software, it shows the text “Please download software”.
7. Now the device can be downloaded:

- Downloading devices is not covered in this manual. Refer to the DICENTIS configuration manual on how to download the devices.

Customer service

If a fault cannot be resolved, please contact your supplier or system integrator, or go directly to your Bosch representative.

Bosch Security Systems B.V.
Torenallee 49
5617 BA Eindhoven
Netherlands
www.boschsecurity.com
© Bosch Security Systems B.V., 2016