HunterDouglas

Installation • Operation • Care

Designer Roller & Designer Screen Shades, and Alustra® Woven Textures® Roller Shades

with PowerView® Gen 3 Automation for

Standard, Cassette, Fascia, Pocket, and Dual Roller

CONTENTS

GETTING STARTED

Product View — Standard Shade 3
Product View — Cassette Shade 4
Product View — Fascia and Pocket Shades 5
Product View — Dual Roller Shade 6
Tools and Fasteners Needed 7

INSTALLATION

Installation Overview 8
STEP 1 — Install the Brackets 8
STEP 2 — Install the Shade 19
STEP 3 — Connect the Power Source 22

OPERATION

Testing the Shade 25
Using the PowerView® Gen 3 Remote 26
Further Operation and Programming Information 27
Resetting the Shade (If Necessary) 27
Install the Standard Bracket Cover (If Ordered) 28
Install the Fascia Panel 28
Install the Pocket Bottom — Pocket Shades Only (Optional) 29
Troubleshooting 29

CARE

Removing the Shade 31
Cleaning Procedures 32

DECLARATIONS 33
WARRANTY 34

Questions?
Call the Hunter Douglas Consumer Support Center at **1-888-501-8364.**

© 2021 Hunter Douglas. All rights reserved. All trademarks used herein are the property of Hunter Douglas or their respective owners.

Product View — Standard Shade

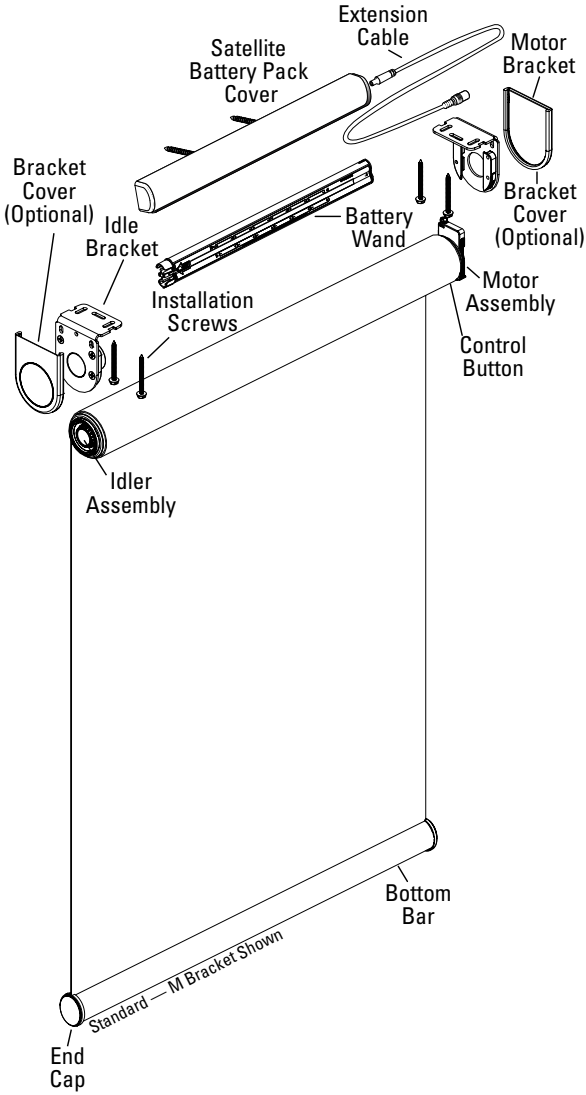

Product View — Cassette Shade

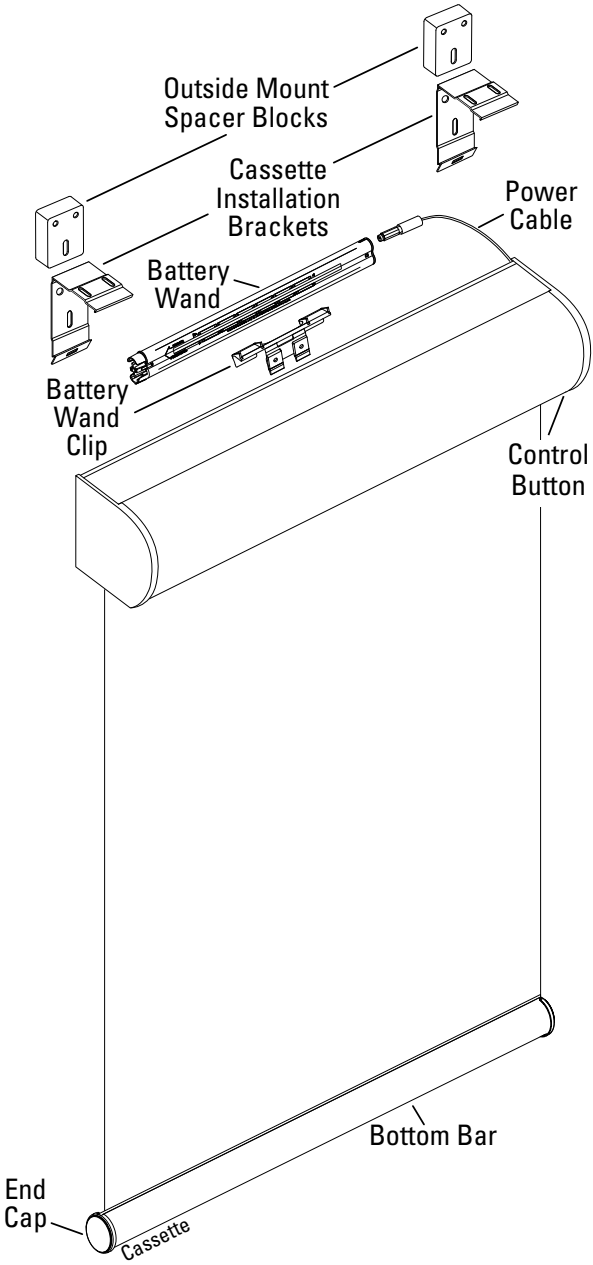

Product View — Fascia and Pocket Shades

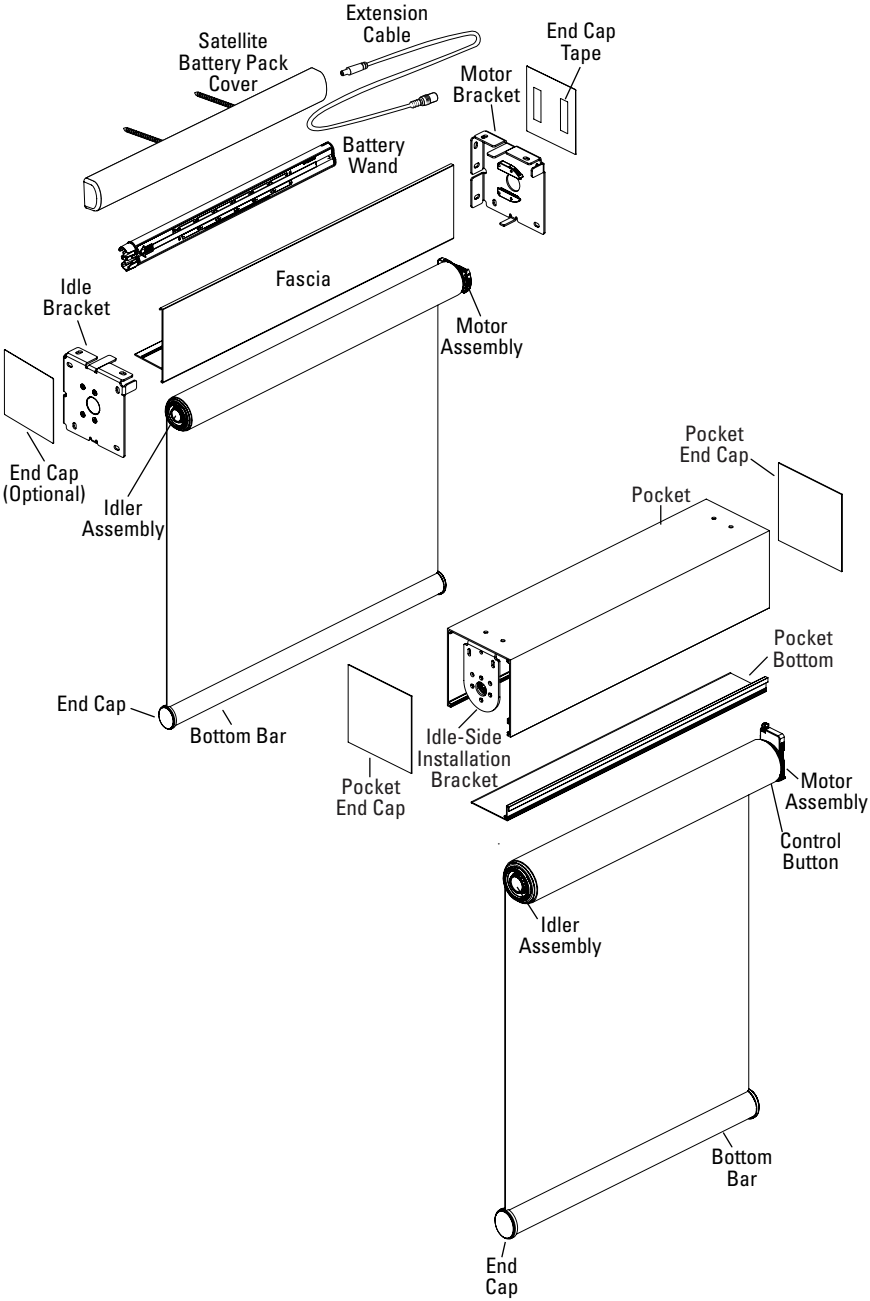

Product View — Dual Roller Shade

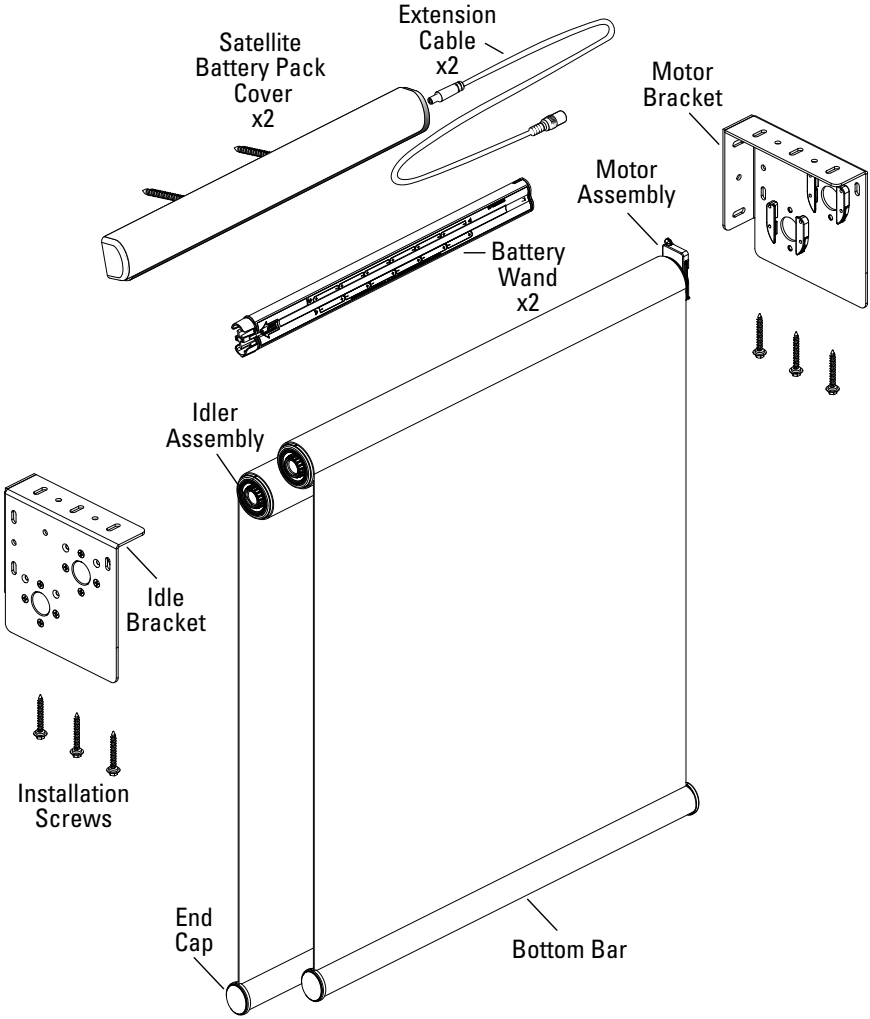

Thank you for purchasing Hunter Douglas Designer Roller and Screen Shades with PowerView® Gen 3 Automation. With proper installation, operation, and care, your new shades will provide years of beauty and performance.

Please thoroughly review this instruction booklet and the enclosed packing list before beginning the installation.

Tools and Fasteners Needed

- Flat blade and Phillips screwdrivers
- Level (laser level is recommended)
- Measuring tape and pencil
- **Standard M and Cassette shades.** Power drill, 3/32" drill bit and a ¼" hex driver.
- **Standard L, Fascia and Dual Roller shades.** Power drill, ⅛" drill bit, and 5/16" hex driver.

In addition, you will need fasteners designed to work with your specific mounting surface(s).

Standard Shades

- **Standard M shades.** #6 hex head screws (provided). Two 1½" screws are provided per installation bracket.
- **Standard L shades.** #10 hex head screws (provided). Two 1½" screws are provided per installation bracket.

Cassette Shades

- **Wall mount with attached battery wand.** Use the cassette spacer blocks with the #6 x 2" screws provided.
- **Wall mount with satellite battery pack.** If using without cassette spacer blocks, use the #6 x 1½" screws provided.
- **Ceiling mount.** Use the #6 x 1½" screws provided.

Fascia and Dual Roller Shades

- **#10 x 1½" Phillips hex head screws (provided).** 1½" screws are provided - four screws for fascia.

Pocket Shades

- **#10 hex head screws (not provided).** For additional information regarding the number of screws needed, see "Pocket Shades" on page 18.

Installation Overview

To install your shade, you will need to perform the following three steps:

STEP 1: Install the brackets and attach additional components

STEP 2: Install the shade

STEP 3: Connect the power source

STEP 1 — Install the Brackets

Identify the brackets for your shade.

- **Installation Brackets for Standard Shades.** An installation bracket is placed at each end of the standard roller shade. There are two sizes M and L.

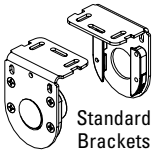

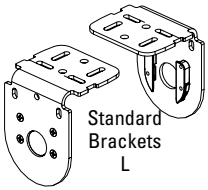

- **Installation Brackets for Cassette Shades.** The number of installation brackets required varies depending on the shade width, as shown in the table.

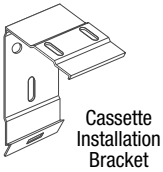

Shade Width	Brackets Required
Up to 36"	2
36 1/8" – 66"	3
66 1/8" – 90"	4
90 1/8" – 115"	5

- **Installation Brackets for Fascia Shades.** An installation bracket is placed at each end of the fascia.

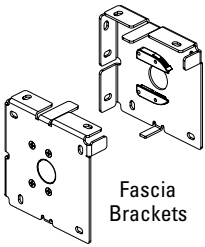

- **Dual Roller Brackets.** An installation bracket is placed at each end of the dual roller shade.

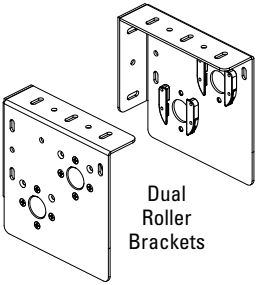

Mounting Types and Window Terminology

If the installation brackets are mounted correctly, the rest of the installation process follows easily. To prepare for this important first step, review the mounting types and basic window terminology illustrated below.

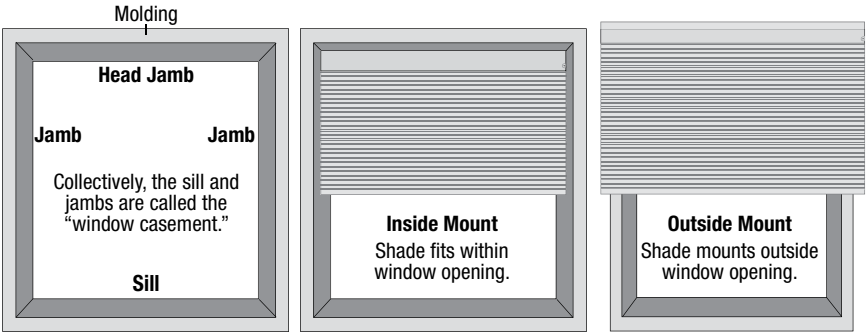

- Refer to the appropriate page below based on the mounting type chosen for your order:
  - **Standard Shades**

    Inside Mount — page 10
    Outside Mount — page 11
  - **Cassette Shades**

    Inside Mount — page 12
    Outside Mount — page 13
  - **Fascia Shades — page 14**
  - **Dual Roller Shades**

    Inside Mount — page 16
    Outside Mount — page 17
  - **Pocket Shades — page 18**

Inside/End Mount — Standard Shades

- **If you ordered bracket covers.** Center the ordered width -¼" in the window casement and mark its location.
- **Shades without bracket covers.** Center the ordered width -⅛" in the window casement and mark its location.
  - ➤ **Standard M shades.** The minimum depth required for mounting is 1⅝". For fully recessed mounting, the depth is 2".
  - ➤ **Standard L shades.** The minimum depth required for mounting is 2". For fully recessed mounting, the depth is 2⅞".

  IMPORTANT: The front edges of the installation brackets must be level and aligned to each other.
- Place the outside edge of the brackets on the previously made marks, then mark each of the screw holes.
- Drill the screw holes using a 3⁄32" drill bit for Standard M shades or ⅛" for Standard L shades.

  WARNING: Product is heavy. Mount into wood/metal studs or into concrete with concrete anchors. Drywall anchors are not recommended.
- Use a level to check that the mounting surface is level. Shim the brackets if necessary.
- Attach the installation brackets using the screws provided.
  - ➤ **End Mount Shims (Optional).** To ensure light gap is even on both sides, you may need to shim the bracket. Do not tighten the screws fully. Orient the shim as shown. Slide the shim in between the bracket and window casement. Tighten the screws fully.

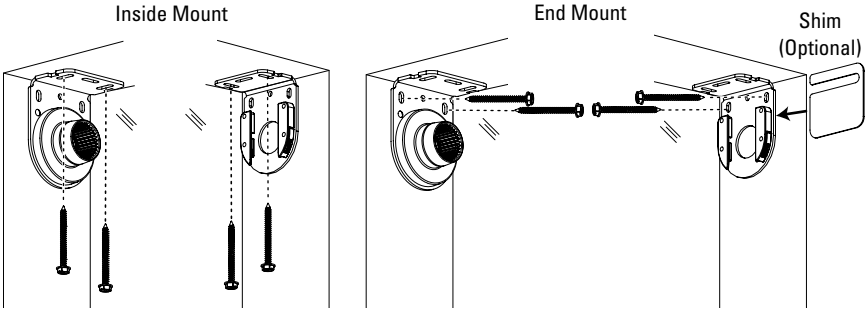

Proceed to “STEP 2 — Install the Shade” on page 19.

Outside Mount — Standard Shades

- Determine the bracket locations.
  - ➤ Center the ordered width -⅛" over the window at the desired height and mark its location.
- Place the outside edge of each bracket on the previously made marks, then mark each of the screw holes.
  - ➤ **Standard M shades.** A minimum 2⅛" flat vertical surface is required to mount the brackets.
  - ➤ **Standard L shades.** A minimum 3" flat vertical surface is required to mount the brackets.
  - ➤ The top of the installation brackets should be at the desired height of the shade.

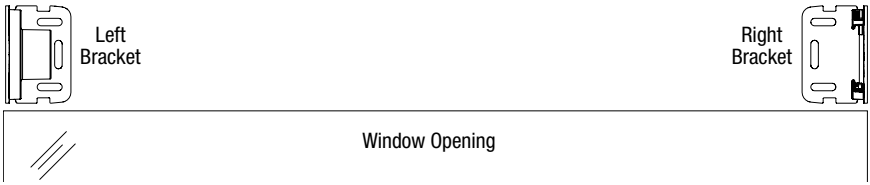

- Drill the screw holes using a 3⁄32" drill bit for Standard M shades or ⅛" for Standard L shades.
- Use a level to check that the mounting surface is level. Shim the brackets if necessary.
- Attach the installation brackets using the screws provided.

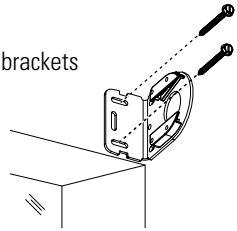

WARNING: Product is heavy. Mount into wood/metal studs or into concrete with concrete anchors. Drywall anchors are not recommended.

Proceed to “STEP 2 — Install the Shade” on page 19.

Inside Mount — Cassette Shades

- Mark 4" from each jamb for bracket location.
  - ➤ If more than two installation brackets came with your order, space additional bracket(s) evenly between the two end brackets and mark their location. Allow a minimum of 18" from the motor end for the battery wand. Mount into wood whenever possible.

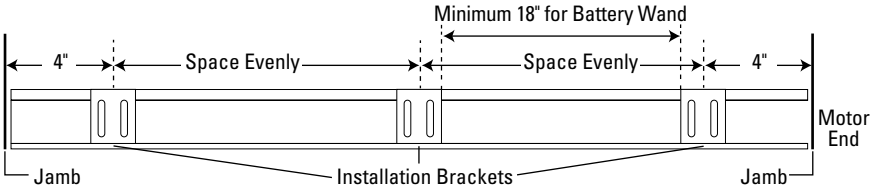

- Center the brackets on your marks, then mark each of the screw holes.
  - ➤ The minimum mounting depth required for PowerView® Gen 3 shades with battery wand is 2¼", all other shades are 1⅝".
  - ➤ Fully recessed mounting for PowerView Gen 3 shades with battery wand is 4⅝", 4" for large cassette and 3½" for small cassette to be flush with the front of window casement.

  IMPORTANT: The front edges of the installation brackets must be level and aligned to each other.

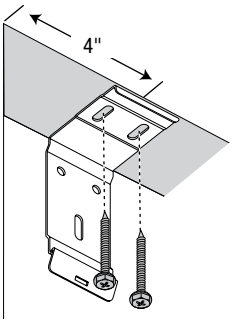

- Drill the screw holes using a 3⁄32" drill bit.
- Use a level to check that the mounting surface is level. Shim the brackets if necessary. Shims are not provided.
- Attach the installation brackets using the screws provided.

WARNING: Product is heavy. Mount into wood/metal studs or into concrete with concrete anchors. Drywall anchors are not recommended.

Proceed to “STEP 2 — Install the Shade” on page 19.

Outside Mount — Cassette Shades

- Center the cassette over the window opening at the desired height and mark the end of the cassette.
- Mark 4" from each end of the cassette for the bracket location.
  - ➤ If more than two installation brackets came with your order, space additional bracket(s), between the two end brackets and mark their location. Allow a minimum of 18" from the motor end for the battery wand. Mount into wood whenever possible.

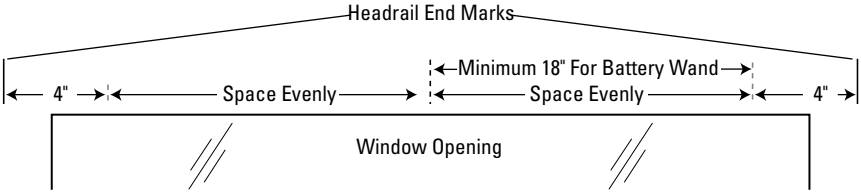

- Center the brackets on your marks, then mark each of the screw holes.
  - ➤ A minimum 4" flat vertical surface is required to mount the brackets.

  IMPORTANT: For shades with a battery wand, place a cassette spacer block behind each installation bracket to allow for the extra space needed for these components.

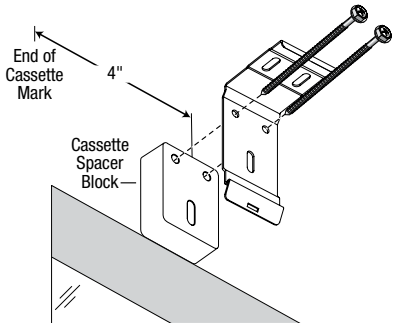

- Drill the screw holes using a 3⁄32" drill bit.
- Use a level to check that the mounting surface is level.
- Attach the installation brackets.
  - ➤ With cassette spacer blocks, use 2" screws provided. If not using cassette spacer blocks, use 1½" screws provided.

WARNING: Product is heavy. Mount into wood/metal studs or into concrete with concrete anchors. Drywall anchors are not recommended.

Proceed to “STEP 2 — Install the Shade” on page 19.

Fascia Shades

- Assemble the two end brackets and the fascia panel.
  - ➤ Place the top of the fascia panel into the top indention of the brackets. Rotate the panel down and snap it into place.

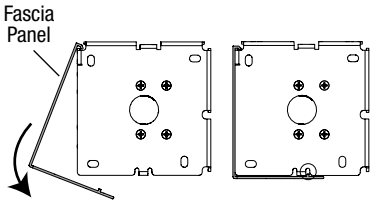

IMPORTANT: Check that the outer surfaces of the brackets are flush with the ends of the panel.

- Center the bracket and panel assembly over the window at the desired height.
  - ➤ Use a level against the bottom edge to make sure the assembly is level. Inside mounts may require a shim between the brackets and the mounting surface.
- **For Outside Mount.** Use a pencil to mark the bottom and outside edges of the brackets on the mounting surface.
- **For Inside Mount.** Use a pencil to mark the outside edges of the brackets on the mounting surface.

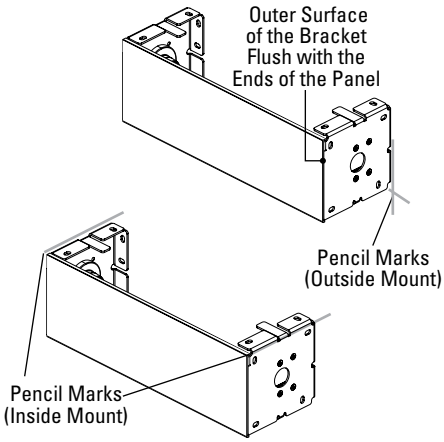

- Remove the assembly from the window.
- Remove the brackets from the fascia panel.
- **Outside Mount.** Use your marks to position each bracket and mark each of the screw holes.
  - ➤ For 4" Fascia, a minimum of 4⅛" flat vertical surface is required to mount the brackets.
  - ➤ For 3" Fascia, a minimum of 3" flat vertical surface is required to mount the brackets.
  - ➤ The top of the installation brackets should be at the desired height. Use your marks to position each bracket and mark the screw holes.

IMPORTANT: The brackets should be level and aligned.

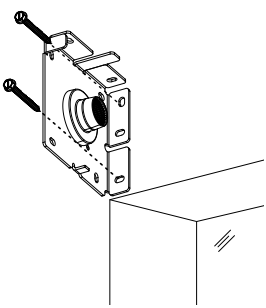

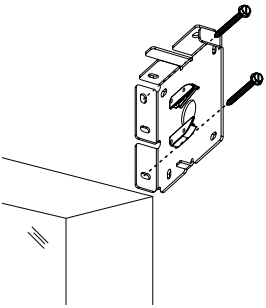

- **Inside/End Mount.** Use your marks to position each bracket and mark each of the screw holes.
  - ➤ For 4" Fascia, the minimum mounting depth required and fully recessed depth is 4⅛".
  - ➤ For 3" Fascia, the minimum mounting depth required and fully recessed depth is 3⅛".
- Drill the screw holes using a ⅛" drill bit.
- Attach the installation brackets using the screws provided.
  - ➤ **End Mount Shims (Optional).** To ensure light gap is even on both sides, you may need to shim the bracket. Do not tighten the screws fully. Orient the shim as shown. Slide the in between the bracket and window casement. Tighten the screws fully.

WARNING: Product is heavy. Mount into wood/metal studs or into concrete with concrete anchors. Drywall anchors are not recommended.

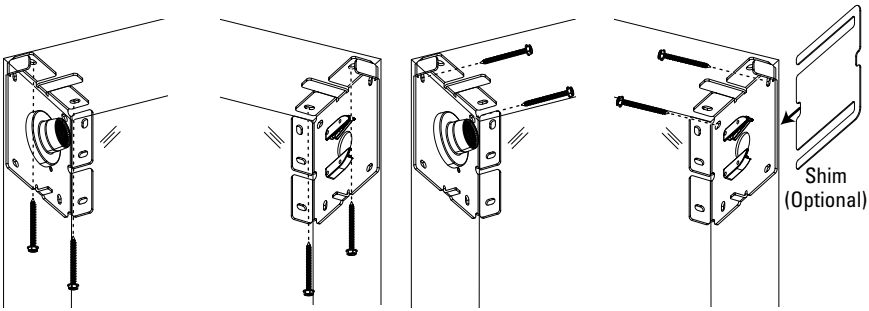

Proceed to “STEP 2 — Install the Shade” on page 19.

Dual Roller Shades - Inside/End Mount

The installation brackets are always mounted so that the inner surfaces face each other. The brackets must be mounted so the shade is level when installed.

- Center the ordered width -⅛" in the window casement and mark its location.
  - ➤ The minimum depth required for mounting is 3¼". The fully recessed depth is 5½".
- Place the outside edge of the brackets on the previously made marks and mark each of the screw holes.
- Remove the adhesive backing on the wire retainer and place it to the upper back corner of the motor-side bracket.

  IMPORTANT: The front edges of the installation brackets must be level and aligned to each other.

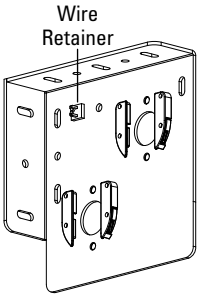

- Use a ⅛" drill bit to drill the screw holes.

WARNING: Product is heavy. Mount into wood/metal studs or into concrete with concrete anchors. Drywall anchors are not recommended.

- Check that the mounting surface is level. Shim the brackets if necessary.
- Attach the installation brackets using the screws provided.
  - ➤ **End Mount Shims Optional.** To ensure light gap is even on both sides, you may need to shim the bracket. Orient the shim as shown. Slide the shim in between the bracket and window casement. Tighten the screws fully.

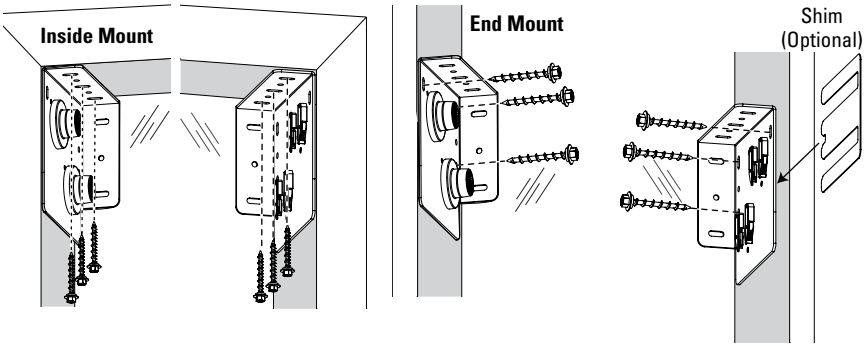

Proceed to “STEP 2 — Install the Shade” on page 19.

Dual Roller Shades - Outside Mount

The installation brackets are always mounted so that the inner surfaces face each other. The brackets must be mounted so the shade is level when installed.

- Center the ordered width measurement over the window at the desired height and mark its location.

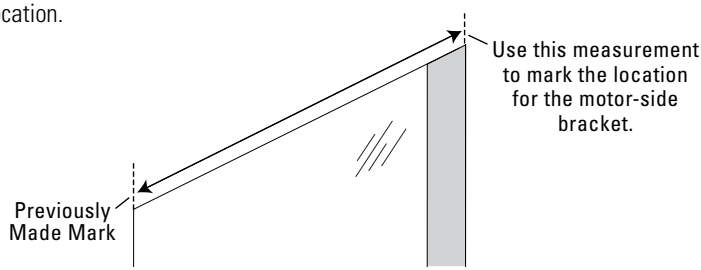

- Remove the adhesive backing on the wire retainer and place it to the upper back corner of the motor-side bracket.

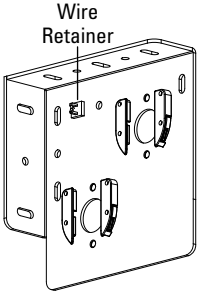

- Place the outside edge of the idle-side bracket on the previously made mark and mark each of the screw holes.
  - ➤ A minimum 5½" flat vertical surface is required to mount the brackets.
  - ➤ The top of the installation brackets should be at the desired height. The brackets should be level and aligned.

Outside Mount – Left Side

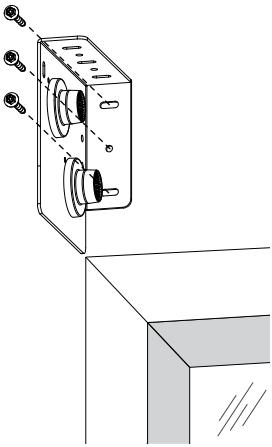

- Place the outside edge of motor-side bracket on the previously made mark and mark each of the screw holes.
  - ➤ The top of the installation brackets should be at the desired height.

  IMPORTANT: The top of the installation brackets must be level and aligned to each other.
- Use a ⅛" drill bit to drill the screw holes.

  WARNING: Product is heavy. Mount into wood/metal studs or into concrete with concrete anchors. Drywall anchors are not recommended.

Outside Mount – Right Side

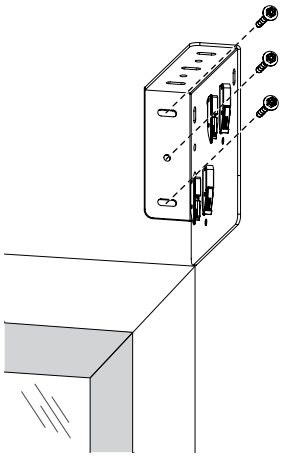

- Use a level to check that the mounting surface is level. Shim the brackets if necessary.
- Attach the installation brackets using the screws provided.

Pocket Shades

CAUTION: Hunter Douglas strongly recommends that shades in a pocket be mounted through wood or metal studs by a professional installer.

The number of #10 x 1½" Phillips hex washer head screws (not provided) required will vary depending on the width of the shade, as shown in the table below.

Shade Width	Screws Required
Up to 36"	4
36⅛" – 66"	6
66⅛" – 90"	8
90⅛" – 120"	10
120⅛" – 150"	12
150⅛" – 180"	14

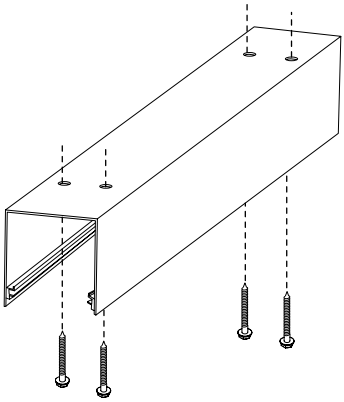

Brackets Removed for Clarity

- Locate the studs or other substantial material for your mounting surface.
- Mark the pocket for the locations you have chosen for the screw holes.
- Drill the screw holes into the pocket and the mounting surface using a ⅛" drill bit.
- Fasten the pocket to the mounting surface using the screws.

STEP 2 — Install the Shade

Standard, Fascia, Pocket and Dual Roller Bracket Shades

Your shade may be standard roll or reverse roll based on your order. For dual roller shades, you will have one of each. Be sure to orient the shade correctly before installing.

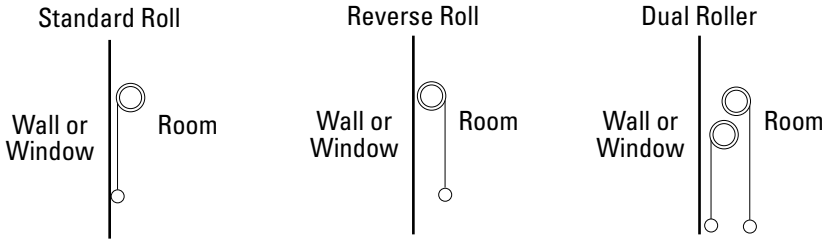

Note: Shade are lowered for clarity. The shade should be wrapped tight with the paper banding in place.

- Remove the foam insert from the idle end of the shade.

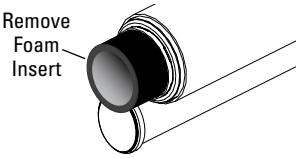

- Verify the top limit screw is screwed in completely. The screw will tighten counterclockwise for standard roll and clockwise for reverse roll.
- The shade should be wrapped tight with the paper banding in place. The bottom bar should be positioned just below the fabric in either the standard or reverse roll position based on your order.

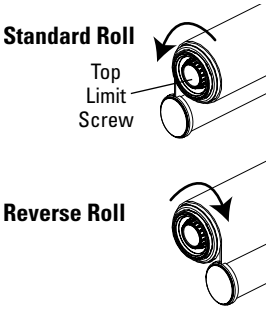

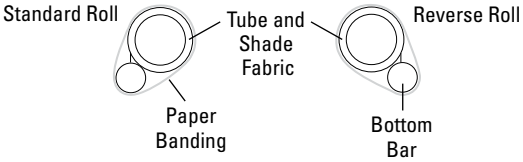

- Holding the shade to the window, rotate the shade to align the motor end with the channels on the bracket before installing the idle end.

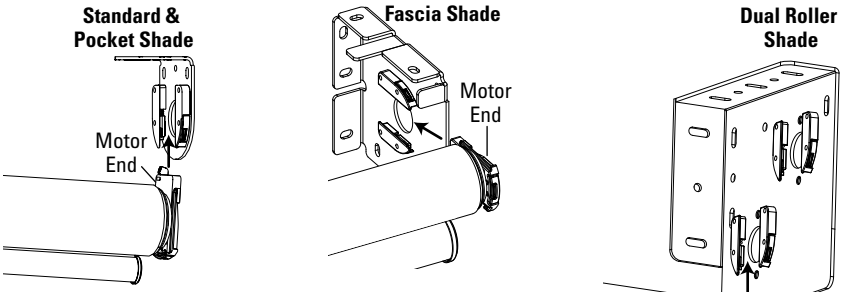

- Push the idle end of the shade onto the bracket.
  - ➤ **For dual roller shades,** install the rear shade first.

  CAUTION: Do not rotate the motor in the tube manually it will damage the motor.

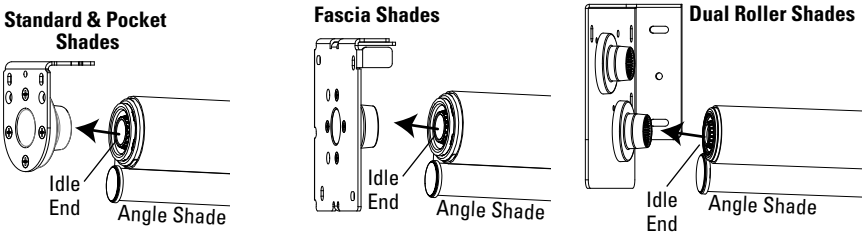

- Slide the shade into the motor bracket until it clicks into place. Refer to the images below for how to orient your shade. Gently pull back on the shade to ensure it is secure.

  CAUTION: Be sure the power cables are not pinched or caught in the brackets.

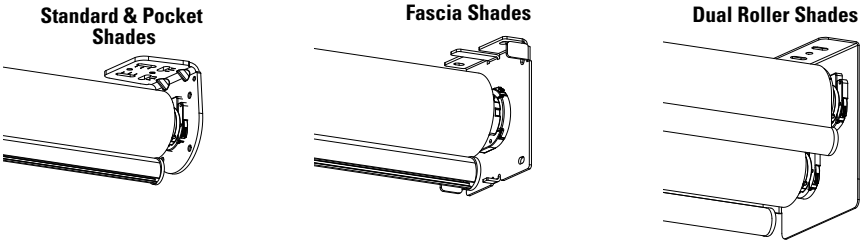

- **Dual Roller Shades.** Install the front shade (using the steps on the previous page) in the front of the dual roller bracket. This shade is a reverse roll shade and should be oriented as such before installing.

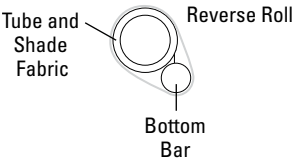

  ➤ Route the motor cable through the wire retainer to ensure the cable does interfere with the rear shade.

  ➤ The front shade is set at the factory to roll tight when raised. You can adjust the top limit to hide the rear shade roll, if desired. See "Calibration Reset" on page 27

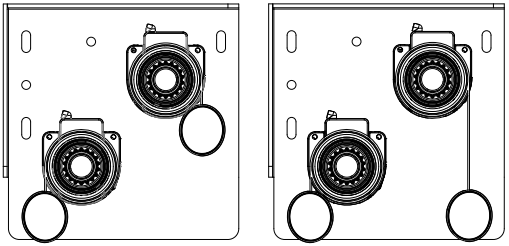

Factory Setting

Top Limit Adjusted to Hide the Rear Shade Roll

Cassette Shades

- Attach the battery wand clip to the back of the cassette approximately 10" from the motor side.

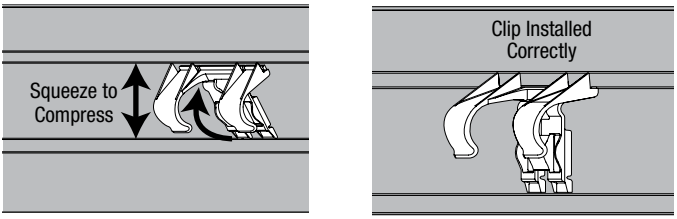

  ➤ Place the bottom of the clip into the lip, squeeze to compress the clip then rotate it up and hook it into the top channel.

- Angle the cassette back and then bring the cassette forward to catch the front lip of the bracket.
- Push the cassette back to snap it into the lower lip on the bracket.

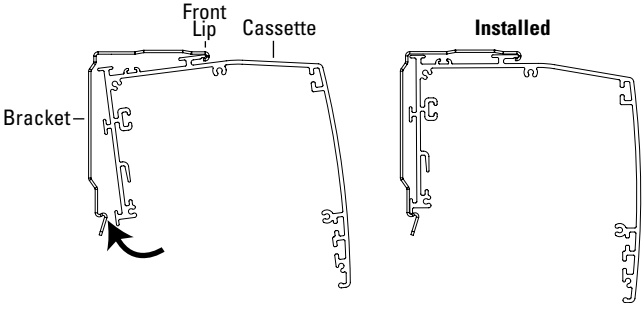

STEP 3 — Connect the Power Source

NOTE: When power is connected to the motor, a blue LED inside the control button housing will flash to indicate the shade is ready for operation.

- Refer to the appropriate page based on your order.
  - ➤ For a battery wand, see below.
  - ➤ For a satellite battery pack, see page 23.
  - ➤ For an optional DC power supply, see page 24.
  - ➤ For an optional DC power supply with daisy-chain connections, see page 25.
  - ➤ For an optional C-size satellite battery wand or large DC supply, see the instructions that came with the power source.

If You Have a Battery Wand...

- Snap the battery wand into the battery wand clip on the back of the cassette.

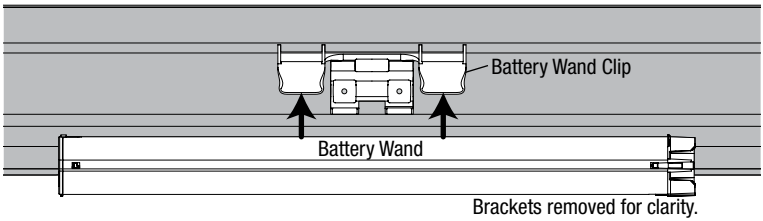

- Connect the power cable from the motor to the battery wand.

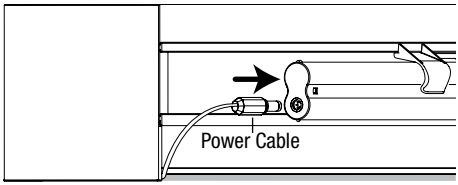

Proceed to “Testing the Shade” on page 25.

If You Have a Satellite Battery Pack...

Mount the Satellite Battery Pack

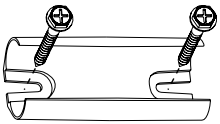

- Decide where you want to mount the bracket. A satellite battery pack may be mounted in any orientation.
- Mark the screw holes.
- Drill the screw hole using a 3⁄32" drill bit.
- Attach the installation brackets using the screws provided.
- Position the battery wand so the power cable is easily connected to the socket.
- Snap the battery wand into the bracket.

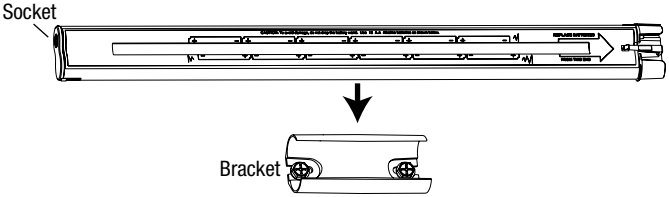

- Place the cover with its slot over the socket in the battery wand.
- Plug the power cable from the shade into the extension cable.
- Plug the other end of the extension cable into the socket of the battery wand.

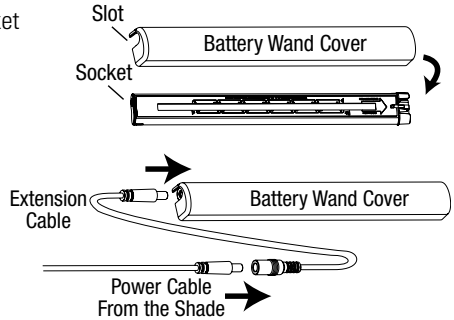

Proceed to “Testing the Shade” on page 25.

If You Have a DC Power Supply...

Connect the Power Supply

- Plug the power cable from the shade into the extension cable.
- Plug the other end of the extension cable into the DC power supply.
- Plug the DC power supply into a standard outlet.
- Secure the power supply cable using wire retainers (not supplied). If hiding the cable behind the shade, make sure it does not impede the operation of the shade.
- Space the wire retainers approximately 15" apart along the power supply cable, as shown.

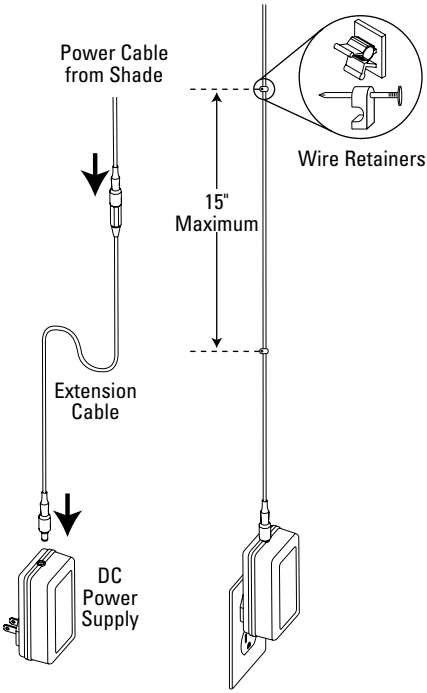

WARNING: Keep cords and small parts out of the reach of children. They can wrap cords around their necks and **STRANGLE**. They can also put small parts in their mouths and **CHOKE**.

WARNING: Electric shock and/or a fire hazard may occur if the DC power supply and cables are not properly installed.

Proceed to “Testing the Shade” on page 25.

If You Have a DC Power Supply with Daisy-Chain Connections...

The daisy-chain feature allows up to three PowerView® Gen 3 automated shades to be powered by a single DC power supply. However, each shade has its own RF receiver and can operate independently. The daisy-chain feature is only available with the DC power supply option.

- Route the power cables from each shade through the connector, using an extension cable, if necessary.
- Plug an extension cable into the connector and the DC power supply. A two-shade configuration is shown below.

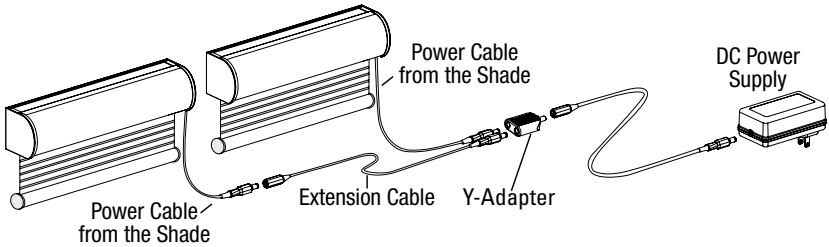

- An additional connector and two additional extension cables are used for three shades.

Testing the Shade

Testing the shade with the control button will allow you to ensure the motor and power source are working correctly. If the shade does not operate, see “Troubleshooting” on page 31.

- Press and release the control button (located on the bottom or front depending on your shade type) to test operation. Use a flat head screwdriver, if necessary. The shade will open, stall, and jog when reaching the top.
- Press and release the control button to fully lower the shade.

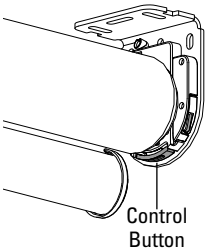

Using the PowerView® Gen 3 Remote

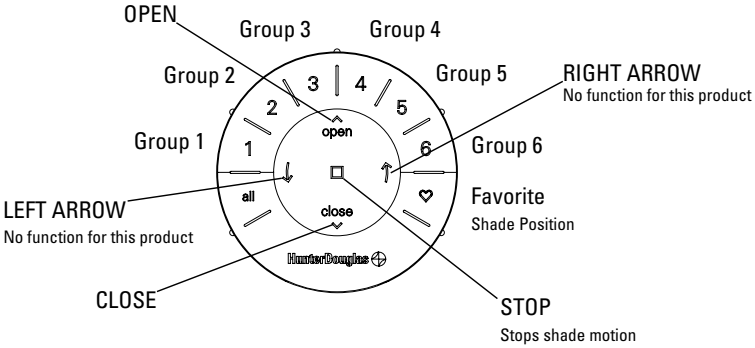

Syncing and Programming Your Remote

- Activate the remote by pulling both plastic tabs from the back battery compartment.
- Go to hdpvapp.com to download the PowerView® App on your smartphone or tablet.
- Open the PowerView App on your smartphone or tablet. Follow the guided process to set up your new shades and remote.
- Following the initial setup, you can program and manage your PowerView Gen 3 remote(s) as accessories in the PowerView App.
- For more information, refer to the digital *PowerView Gen 3 Automation Remote Control Guide* available for view/download at https://help.hunterdouglas.com/s/powerview-gen-3-manuals.

Basic Operation

- To wake up the remote, simply pick it up or press ■ STOP. The last group(s) selected will be highlighted and active.
- To select a group, press 1 – 6 or ALL. Selected group button(s) will light to show they are selected. Multiple group buttons may be selected at a time.
- To deselect a group, press the group button again. The backlight for that group button will go out.
- Press ▼ CLOSE to lower the shade to fully closed.
- Press ▲ OPEN to raise the shade to fully open.
- While shade is in motion, press the opposite of shade motion (▲ OPEN or ▼ CLOSE) to reverse direction and move to fully open or fully closed.
- Press ■ STOP to stop shade movement anywhere along its travel.
- Press ♥ FAVORITE to send selected shade(s) to your preset “favorite” position. The default favorite position is at 50% open.
- Double click ♥ FAVORITE to send selected shadings(s) to your second present favorite You can update both “favorite” positions in the PowerView App, under the shade’s settings.

Further Operation and Programming Information

PowerView® App Operation

The PowerView® App is required to program PowerView Gen 3 shades, remote controls, gateways, and scene controllers. The App is compatible with Apple® and Android™ smartphones and tablets. For more information regarding setup and operation using the PowerView App, please visit https://help.hunterdouglas.com/s/powerview-gen-3-manuals.

PowerView® Gen 3 Gateway Operation

The PowerView Gen 3 Gateway is used to control shades in larger projects as well as integrate PowerView Gen 3 shades with third-party integration systems. For information regarding programming of PowerView Gen 3 Gateways, refer to the digital *PowerView Gen 3 Automation Gateway Guide*, available to view and/or download at https://help.hunterdouglas.com/s/powerview-gen-3-manuals.

PowerView® Gen 3 Remote Operation

For more information regarding operation and programming of the PowerView® Gen 3 Remote, refer to the digital *PowerView® Gen 3 Automation Remote Control Guide,* available to view and/or download at https://help.hunterdouglas.com/s/powerview-gen-3-manuals.

PowerView® Gen 3 Scene Controller Operation

For more information regarding operation and programming of the PowerView® Gen 3 Scene Controller, refer to the digital *PowerView® Gen 3 Automation Scene Controller Guide,* available to view and/or download at https://help.hunterdouglas.com/s/powerview-gen-3-manuals.

Resetting the Shade (If Necessary)

Calibration Reset

The calibration reset is used to recalibrate the shade's travel limits. This action is performed in the PowerView App.

- Select Calibrate Shade in the Advanced Options section of the Shade Settings menu in the PowerView App.
- The shade will touch off on end limits, then finish in the closed position. When the shade stops moving, calibration is complete.

Resetting Shade Programming

The PowerView® App may be used to modify or reset any shade programming to PowerView Gen 3 remotes, gateways, and scene controllers. Shades may be added to or removed from Rooms and Scenes in the App at any time. If necessary, shades may also be deleted from the PowerView App in the Advanced Options section of the Shade Settings menu.

Electronic Limit Adjustments

Electronic limits are set at the factory and normally do not require readjustment. For window treatments that may need additional adjustment or to set custom limit positions, go to Shade Settings in the PowerView App for adjustable limits. For more information about setting limits please visit our website at https://help.hunterdouglas.com/s/powerview-gen-3-manuals.

Adjust Shade Limits (If Necessary)

NOTE: Before adjusting the shade limits, cycle the shade at least twice to the fully open and closed positions to determine whether limits need adjusting.

Adjusting the Top Limit (Manually)

Standard Bracket, Fascia, Pocket and Dual Roller Shades

- Raise the shade fully.
- Disconnect the power and remove the shade. See “Removing the Shade” on page 33.
- Rotate the shade manually to desired bottom rail position when the shade is fully raised.
- Verify the top limit screw is screwed in completely. The screw will tighten counterclockwise for standard roll and clockwise for reverse roll. The top limit screw shouldn't turn more than one turn to be completely screwed in.
- Re-install the idle end.
- **With the idle end installed**, rotate shade until motor is aligned to insert into the bracket.

  CAUTION: Do not rotate the motor in the tube manually it will damage the motor.

  ➤ Standard roll rotate the shade toward the window.

  ➤ Reverse roll rotate the shade toward the room.

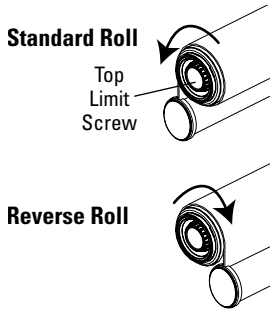

- Slide the shade up into the bracket until it clicks into place. Gently pull on shade to ensure it is secure. See “STEP 2 — Install the Shade” on page 19.
- Reconnect the power and raise the shade to check new bottom bar position, if good, then lower shade and adjust bottom limit (if necessary).
- Check and adjust the bottom limit, as needed. See “Electronic Limit Adjustments” on page 28.

Adjusting Hard Top Limit (Cassette)

Attempt a calibration reset first, as explained above. If the bottom rail does not stop at the desired top limit on its way to the top, you will need to adjust the hard stop top limit.

NOTE: These instructions are for adjusting the hard stop limit for roller shades with Cassette only.

- Raise the shade fully.
- Disconnect power and remove the shade from the window. See “Removing the Shade” on page 33.
- Gently remove the end cap from the non-control (idle) side of the cassette headrail. The metal cassette endplate will be exposed with a hole in the middle.
- Insert a 3⁄16" Allen wrench into the hole in the cassette endplate. Turn ¼" clockwise for standard roll, counterclockwise for reverse role.

NOTE: A ¼" turn raises the upper limit approximately 2" to 3". Reassemble the end cap of the cassette rail.

- Re-install the shade in the window. Gently pull on shade to ensure it is secure. See “STEP 2 — Install the Shade” on page 19.
- Reconnect the power and raise the shade to check the new raised position for the bottom bar.
- Check and adjust the bottom limit, as needed. See “Electronic Limit Adjustments” on page 28.

Install the Standard Bracket Cover (If Ordered)

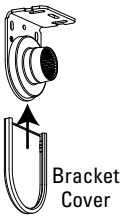

- **If you ordered standard bracket covers.** Install the bracket covers by aligning the bracket with the channels in the bracket cover and sliding it onto the bracket.

Install the Fascia Panel

- Place the top of the fascia panel into the top indention of the brackets. Rotate the panel down and snap it into place.

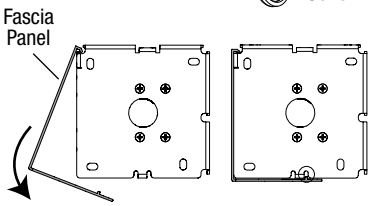

- **Optional.** Remove the backing from the tape on the end caps and press onto the brackets.
  - ➤ Check that the outer surfaces of the brackets are flush with the ends of the panel. If not flush, loosen the brackets and move the bracket over to make it flush with the panel.

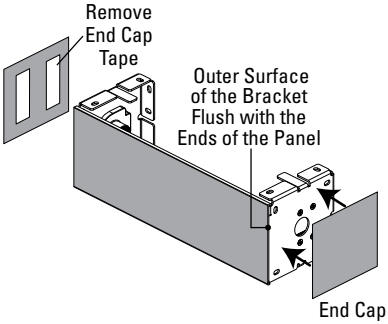

Install the Pocket Bottom — Pocket Shades Only (Optional)

- Attach the bottom of the pocket.
  - ➤ Place the bottom into the pocket at an angle.
  - ➤ Hook the bottom to the ledge inside the pocket.
  - ➤ Rotate it down to secure it into place.

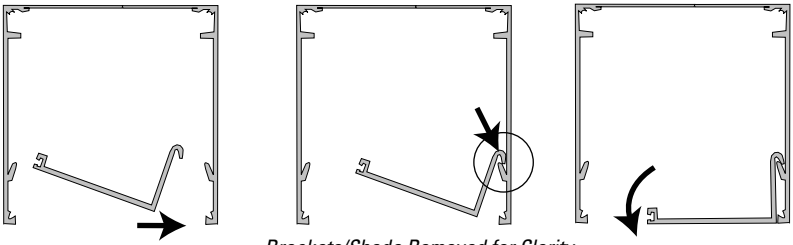

Brackets/Shade Removed for Clarity

Troubleshooting

If your shade is not operating correctly:

- First review the digital guide for your control device. Visit https://help.hunterdouglas.com/s/powerview-gen-3-manuals to view and/or download the guide.
- Refer to the following troubleshooting procedures below for the specific solutions for your shade.

If questions remain, please contact the Hunter Douglas Consumer Support at **1-888-501-8364.**

Problem	The shade will not fit into the installation brackets.
Solution	Check that the installation brackets are aligned and level. Check that the roller tube or cassette is completely inserted into the installation brackets. See "STEP 2 — Install the Shade" on page 19. **Bracket shades only:** Check to ensure the bracket distance is correct. If the brackets are mounted too closely to one another the shade will not operate correctly. **Fascia shade only.** If the tab on the fascia bracket interferes with installing the shade, remove the paper band and gently move the bottom rail away from the tab.
Problem	The shade does not operate using the control button.
Solution	Check to be sure the batteries in the shade and the remote are new and are installed correctly. Check that the power source is securely connected to the power cable and the cables are not pinched or caught. See "STEP 3 — Connect the Power Source" on page 22. Make sure the DC power supply is plugged in and there is power to the outlet.
Problem	The shade is not responding to the PowerView® Gen 3 remote.
Solution	**IMPORTANT:** A shade will not operate using the remote until it has been joined to a group. Check which group number the shading is joined to on the remote in the PowerView App. You can find this under MORE > ACCESSORIES in the App. Check that the batteries in the remote are correctly inserted and are fresh. The LEDs that backlight the remote should come on full bright when ■STOP is pressed. Check that the power source is securely connected to the power cable and the cables are not pinched or caught in the headrail or installation brackets.

Problem	The shade hangs too high or too low when fully lowered.
Solution	Perform a calibration reset. See “Calibration Reset” on page 27.
Problem	The shade hangs too high or too low when fully raised.
Solution	Perform a calibration reset. See “Calibration Reset” on page 27.
Problem	The shade operation is slow.
Solution	The batteries may be low in the battery wand, satellite battery pack, or C-size battery wand. Check battery orientation or replace the batteries. Check that the battery wand, satellite battery pack, C-size satellite battery wand, or DC power supply is securely connected to the power cable and the cables are not pinched or caught.

Removing the Shade

CAUTION: Before removing the shade, the shade should be fully raised.

- **Pocket Shades Only.** Remove the bottom cover. Lift up the edge of the bottom cover. Disengage it from the ledge of the pocket.

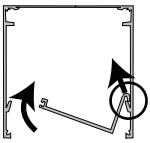

- **Fascia Shades Only.** Remove the front/bottom cover of the fascia by pulling down on the bottom of the cover, near the installation brackets, to release it from the tabs on the installation brackets.

  ➤ Rotate the cover up and remove it.

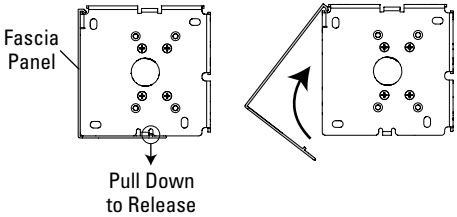

- **Standard Bracket Shades with Bracket Covers.** Remove the cover on the motor-side.

  NOTE: Standard Bracket shades are shown in the illustration, but the process is the same for all shades types except Cassette shades shown below.

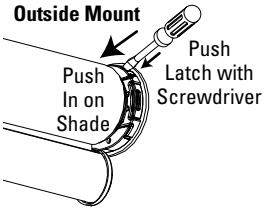

- Disconnect power and make sure cables are not caught before attempting to removing shade.
- You will use a screwdriver to push the latch. First, push the shade away from the screwdriver until the latch moves (depending on your mounting type you may need to push up or in), and then press the latch.
- Slide the shade out of the motor bracket.
- Pull the shade from the idle bracket.

Cassette Shades

- Disconnect power and make sure cables are not caught before attempting to removing shade.
- Insert the tip of a flat blade screwdriver into the screwdriver slot provided on the bracket.
- Press down to release the cassette.
- Roll the cassette forward and then down to remove.

  IMPORTANT: Do not remove the roller shade from the cassette.

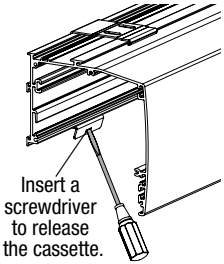

Cleaning Procedures

Hunter Douglas shades are made from dust-resistant materials which repel dirt and dust. The following options are available if your shade needs cleaning.

Dusting

- Regular light dusting with a feather duster is all the cleaning needed in most circumstances.

Vacuuming

- Use a hand-held vacuum with low suction for more thorough dust removal.

Compressed Air/Hair Dryer (Cool Setting)

- Use compressed air or a hair-dryer on a cool setting to blow dust and dirt off of shades.

Spot-Cleaning

CAUTION: Do not spot-clean Alustra® Woven Textures® fabrics, Fiji, and Fiji Dimout fabrics.

- Prepare a solution of warm water and a mild detergent.
- Dampen a clean cloth in the solution and wring it out.
- Dab the spot with the dampened cloth until it is removed. Do not rub the fabric.
- Allow the shade to dry in the completely lowered position.

U.S. Radio Frequency FCC Compliance

This equipment has been tested and found to comply with the limits for a Class B digital device, pursuant to Part 15 of the FCC Rules. These limits are designed to provide reasonable protection against harmful interference in a residential installation. This equipment generates, uses and can radiate radio frequency energy and, if not installed and used in accordance with the instructions, may cause harmful interference to radio communications. However, there is no guarantee that interference will not occur in a particular installation. If this equipment does cause harmful interference to radio or television reception, which can be determined by turning the equipment off and on, the user is encouraged to try to correct the interference by one or more of the following measures:

- *Reorient or relocate the receiving antenna.*
- *Increase the separation between the equipment and receiver.*
- *Consult the dealer or an experienced radio/tv technician for help.*

Note: Changes or modifications not expressly approved by the manufacturer responsible for compliance could void the user's authority to operate the equipment.

This device complies with Part 15 of the FCC Rules. Operation is subject to the following two conditions: (1) this device may not cause harmful interference and (2) this device must accept any interference received, including interference that may cause undesired operation.

Innovation, Science and Economic Development Canada

ICES-003

This Class B digital apparatus complies with Canadian ICES-003.

- *Operation is subject to the following two conditions: (1) this device may not cause harmful interference and (2) this device must accept any interference received, including interference that may cause undesired operation.*

NMB-003

Cet appareil numérique de la classe B est conforme à la norme NMB-003 du Canada.

- *L'utilisation de ce dispositif est autorisée seulement aux conditions suivantes : (1) il ne doit pas produire de brouillage et (2) l'utilisateur du dispositif doit être prêt à accepter tout brouillage radioélectrique reçu, même si ce brouillage est susceptible de compromettre le fonctionnement du dispositif.*

European Conformity

Hunter Douglas Window Fashions, One Duette Way, Broomfield, CO 80020, USA

Hunter Douglas hereby declares that the PV20 is in compliance with the essential requirements and other relevant provisions of Electromagnetic Compatibility (EMC) Directive 2014/30/EU and Radio Equipment Directive (RED) 2014/53/EU. A copy of the DoC can be obtained online: www.hunterdouglas.com/RFcertifications.

A copy of the original declaration of conformity may be found at www.hunterdouglas.com/RFcertifications.

LIFETIME GUARANTEE

The Hunter Douglas® Lifetime Guarantee is an expression of our desire to provide a thoroughly satisfying experience when selecting, purchasing and living with your window fashion products. If you are not thoroughly satisfied, simply contact Hunter Douglas at (888) 501-8364 or visit **hunterdouglas.com**. In support of this policy of consumer satisfaction, we offer our Lifetime Limited Warranty as described below.

COVERED

BY A LIFETIME LIMITED WARRANTY

- Hunter Douglas window fashion products are covered for defects in materials, workmanship or failure to operate for as long as the original retail purchaser owns the product (unless shorter periods are provided below).
- All internal mechanisms.
- Components and brackets.
- Fabric delamination.
- Operational cords for a full 7 years from the date of purchase.
- Repairs and/or replacements will be made with like or similar parts or products.
- Hunter Douglas motorization components are covered for 5 years from the date of purchase.

NOT COVERED

BY A LIFETIME LIMITED WARRANTY

- Any conditions caused by normal wear and tear.
- Abuse, accidents, misuse or alterations to the product.
- Exposure to the elements (sun damage, wind, water/moisture) and discoloration or fading over time.
- Failure to follow our instructions with respect to measurement, proper installation, cleaning or maintenance.
- Shipping charges, cost of removal and reinstallation.

Hunter Douglas (or its licensed fabricator/distributor) will repair or replace the window fashion product or components found to be defective.

TO OBTAIN WARRANTY SERVICE

1. Contact your original dealer (place of purchase) for warranty assistance.
2. Visit hunterdouglas.com for additional warranty information, frequently asked questions and access to service locations.
3. Contact Hunter Douglas at (888) 501-8364 for technical support, certain parts free of charge, for assistance in obtaining warranty service or for further explanation of our warranty.

NOTE: In no event shall Hunter Douglas or its licensed fabricators/distributors be liable or responsible for incidental or consequential damages or for any other indirect damage, loss, cost or expense. Some states do not allow the exclusion or limitation of incidental or consequential damages, so the above exclusion or limitation may not apply to you. This warranty gives you specific legal rights, and you may also have other rights which vary from state to state.

Different warranty periods and terms apply for commercial products and applications.

HunterDouglas

hunterdouglas.com

22 April 2021