3D Antenna Measurement Summary Report

REPORT NO.: ORBDUM-WTW-P23020799 R1

MODEL NAME: CP01

TESTED DATE: 2023.2.24

ISSUED: 2024.8.7

APPLICANT : CRADLEPOINT, INC.

ADDRESS : 1111 W. Jefferson Street Suite 400 Boise, ID 83702 USA

ISSUED BY: Bureau Veritas Consumer Products Services (Hong Kong) Limited, Taoyuan Branch Mobile Communications Laboratory

ADDRESS: No.19, Hwa Ya 2nd Rd., Kwei shan Dist., Taoyuan City, Taiwan (R.O.C)

The client to claim product certification, approval, or endorsement by TAF, CTIA or any government agencies, should not use this report.

This report is governed by, and incorporates by reference, the Conditions of Testing as posted at the date of issuance of this report at http://www.bureauveritas.com/home/about-us/our-business/cps/about-us/terms-conditions/ and is intended for your exclusive use. Any copying or replication of this report to or for any other person or entity, or use of our name or trademark, is permitted only with our prior written permission. This report sets forth our findings solely with respect to the test samples identified herein. The results set forth in this report are not indicative or representative of the quality or characteristics of the lot from which a test sample was taken or any similar or identical product unless specifically and expressly noted. Our report includes all of the tests requested by you and the results thereof based upon the information that you provided to us. Measurement uncertainty is only provided upon request for accredited tests. Statements of conformity are based on simple acceptance criteria without taking measurement uncertainty into account, unless otherwise requested in writing. You have 60 days from date of issuance of this report to notify us of any material error or omission caused by our negligence or if you require measurement uncertainty; provided, however, that such notice shall be in writing and shall specifically address the issue you wish to raise. A failure to raise such issue within the prescribed time shall constitute your unqualified acceptance of the completeness of this report, the tests conducted and the correctness of the report contents.

RELEASE CONTROL RECORD

REPORT NO.	REASON FOR CHANGE	DATE ISSUED
ORBDUM-WTW-P23020799	Original release	2023.3.7
ORBDUM-WTW-P23020799 R1	Attach an Appendix report for Testing setup & EUT photographs	2024.8.7

TABLE OF CONTENTS

GENERAL INFORMATION....3

1. Test Methods....4
2. Description of the anechoic chamber: 4
3. Test Equipment List....5
4. Measurement Uncertainty.... 5
5. Testing Setup Photos 6
6. Antenna Radiation Performance.... 6
7. 3D Antenna Patterns.... 7

APPENDIX. EUT photographs 41

GENERAL INFORMATION

APPLICANT:	CRADLEPOINT, INC.
MODEL NAME:	CP01
MEASUREMENT STATNDARD	ANSI/IEEE 149 Srd 2021

TESTED BY : Leo Chen / Engineer **, DATE :** 2024.8.7

PREPARED BY : Johnny Liu / Supervisor **, DATE :** 2024.8.7

APPROVED BY : Ken Chan / Manager **, DATE :** 2024.8.7

1. Test Methods

The Antenna Gain Test is performed according to The ANSI/IEEE Std 149 12.3.1 Antenna Gain (Small size (< 42cm) Linear Polarization Antennas), using a two-axis support device and one fixed measurement antenna. The EUT is positioned along the required MAPS centerline fixture holder. The EUT is then stepped between 0 and 180 degrees along the theta axis in 15-degree increments. At each theta position, the phi axis is stepped from 0-360 degrees in 15-degree increments. Data is recorded using the Network analyzer for both theta and phi polarizations at each position. Depending on the protocol, an appropriate filter is used in the EMQuest software to process the data. Upon completion of the test, test results (angular dependent EIRP) is calculated at each measurement point and the required value is automatically calculated. This test procedure is repeated for frequency and configuration as required.

2. Description of the anechoic chamber:

Length: 7.32 m
Width: 3.66 m
Height: 3.51 m

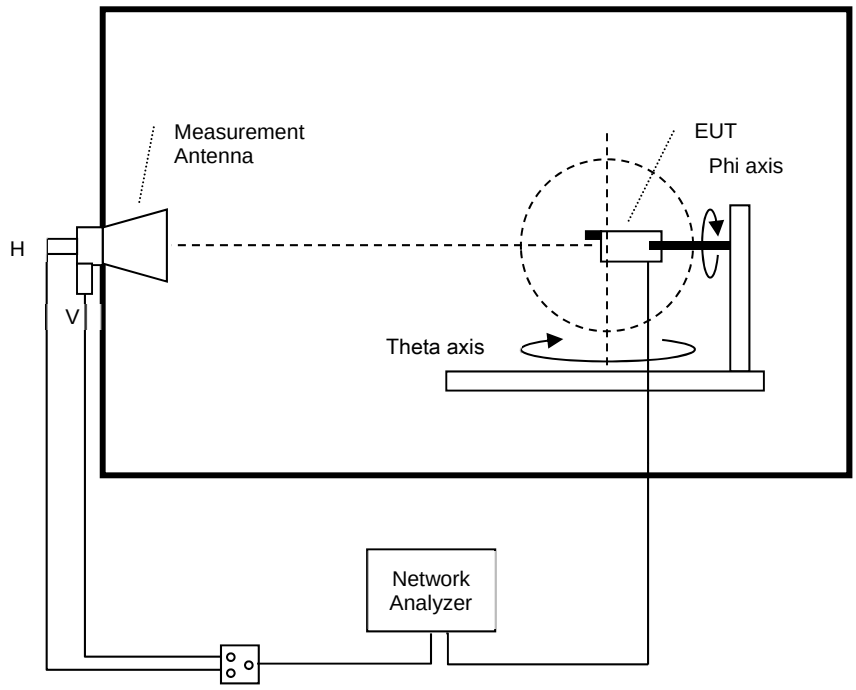

3. Test Equipment List

TYPE OF EQUIPMENT	MODEL NUMBER	SERIAL NUMBER	CALIBRATION DUE DATE
(OTA3-HY) ETS Anechoic Chamber	ETS-Lindgren AMS-8500	CT0000411-1132	N/A
Measurement Software	ETS-Lindgren EMQuest V1.14 build 31654	1281	N/A
Multi-Axis Positioning System	ETS-Lindgren 2090-OPTI	00086248	N/A
Switch Control	Agilent 3499A	MY42005285	N/A
Sleeve Dipole Antenna	ETS-Lindgren, 3126-600	00249504	2025/7/19
Sleeve Dipole Antenna	ETS-Lindgren, 3126-700	00119460	2023/4/23
Sleeve Dipole Antenna	ETS-Lindgren, 3126-800	00201793	2023/4/22
Sleeve Dipole Antenna	ETS-Lindgren, 3126-880	00108290	2023/4/22
Sleeve Dipole Antenna	ETS-Lindgren, 3126-1575	00119255	2023/4/23
Sleeve Dipole Antenna	ETS-Lindgren, 3126-1845	00099429	2023/4/23
Sleeve Dipole Antenna	ETS-Lindgren, 3126-2140	00099277	2023/4/23
Sleeve Dipole Antenna	ETS-Lindgren, 3126-2450	00092170	2023/4/23
Sleeve Dipole Antenna	ETS-Lindgren, 3126-2500	00092560	2023/4/22
Sleeve Dipole Antenna	ETS-Lindgren, 3126-3600	00082933	2023/4/22
Broadband Dipole Antenna Assembly	ETS-Lindgren, 3126B-04	00227410	2023/5/15
Sleeve Dipole Antenna	ETS-Lindgren, 3126C-6500	00252000	2025/8/2
Network Analyzer	Agilent E5071C	MY46104190	2023/5/29

4. Measurement Uncertainty

Expanded Uncertainty for Measurement (k=2 or 95.45% Confidence Level) at Passive antenna test over frequency range:.

FREQUENCY RANGE	MEASUREMENT UNCERTAINTY
780~2200 MHz	1.40 dB
2200~3000 MHz	1.72 dB
3000~6000 MHz	3.86 dB

5. Testing Setup Photos

Please refer to another document – “ORBDUM-WTW-P23020799_CRADLEPOINT_CP01_Antenna measurement summary_Appendix” Test Setup and EUT photographs.

6. Antenna Radiation Performance

Frequency (MHz)	**2400**	**2425**	**2450**	**2475**	**2500**	**5150**	**5175**	**5200**	**5225**	**5250**	**5275**	**5300**	**5325**	**5350**
Average Gain (dBi)	-1.30	-1.43	-1.51	-1.56	-1.45	-3.26	-2.91	-3.03	-3.01	-2.86	-3.15	-2.86	-2.83	-3.07
Peak Gain (dBi)	5.71	5.58	5.60	5.61	5.74	3.71	4.12	4.07	4.17	4.40	4.16	4.50	4.63	4.37
Efficiency (%)	74.14	71.88	70.69	69.84	71.59	47.25	51.11	49.75	49.97	51.74	48.47	51.71	52.16	49.30
Frequency (MHz)	**5375**	**5400**	**5425**	**5450**	**5475**	**5500**	**5525**	**5550**	**5575**	**5600**	**5625**	**5650**	**5675**	**5700**
Average Gain (dBi)	-2.71	-3.02	-3.00	-3.13	-3.22	-2.74	-2.87	-2.90	-2.73	-2.86	-2.75	-2.77	-2.66	-2.32
Peak Gain (dBi)	4.71	4.42	4.46	4.22	4.31	5.08	5.05	5.06	5.22	5.10	5.26	5.28	5.37	5.60
Efficiency (%)	53.59	49.84	50.16	48.63	47.68	53.23	51.63	51.33	53.36	51.72	53.12	52.79	54.19	58.67
Frequency (MHz)	**5725**	**5750**	**5775**	**5800**	**5825**	**5850**								
Average Gain (dBi)	-2.60	-2.49	-2.67	-2.67	-2.46	-2.38								
Peak Gain (dBi)	5.19	5.10	4.74	4.58	4.78	4.84								
Efficiency (%)	54.99	56.41	54.13	54.06	56.73	57.75								

7. 3D Antenna Patterns

2400MHz

Total

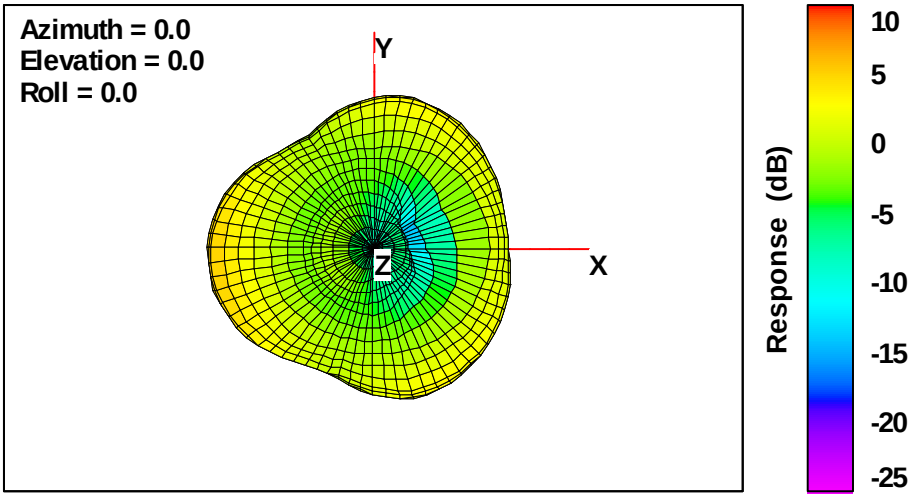

Total

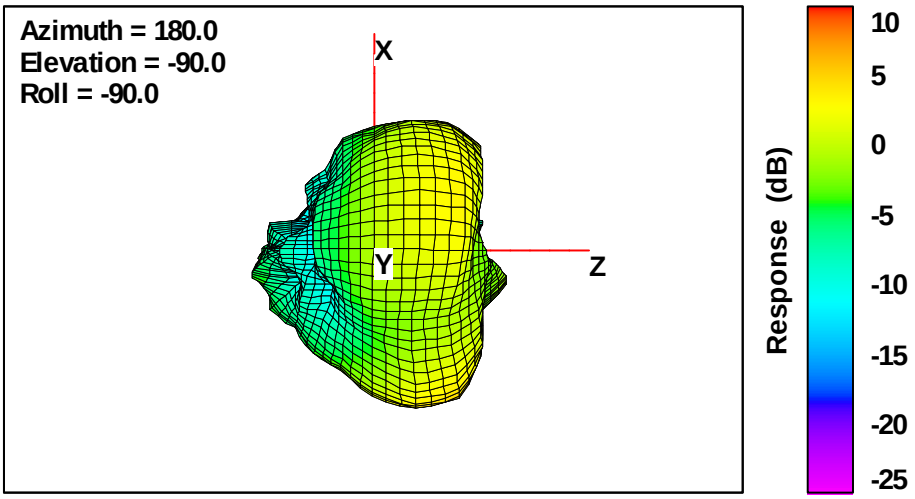

Total

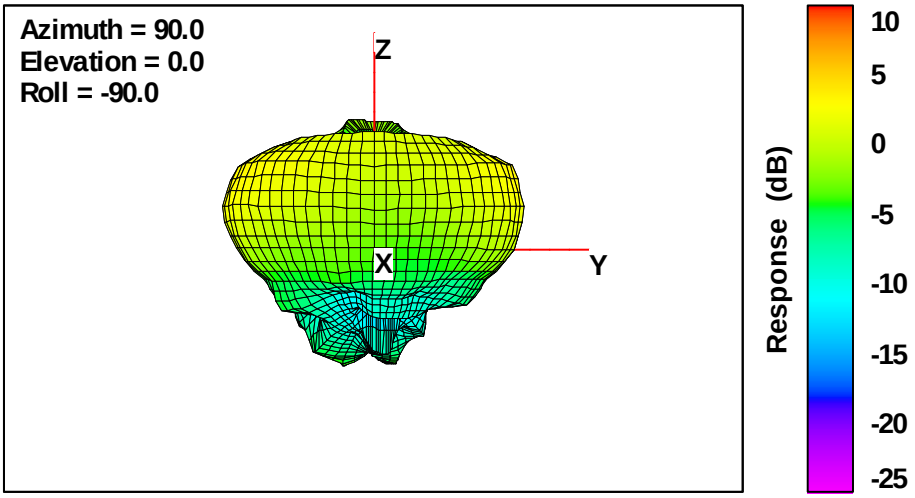

2425MHz

Total

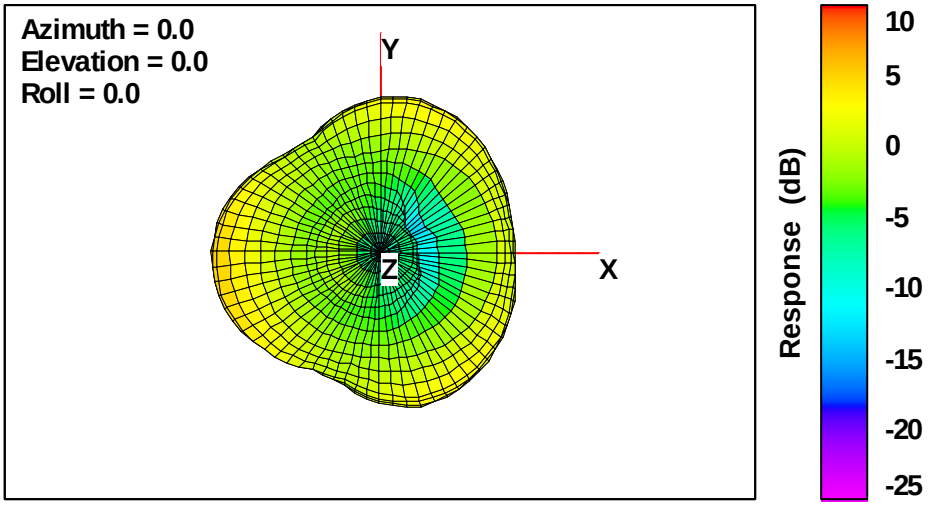

Total

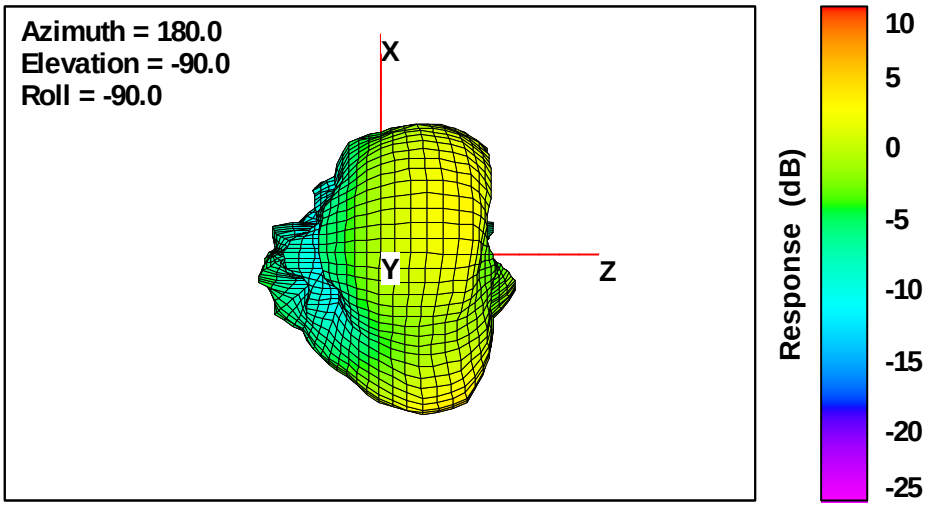

Total

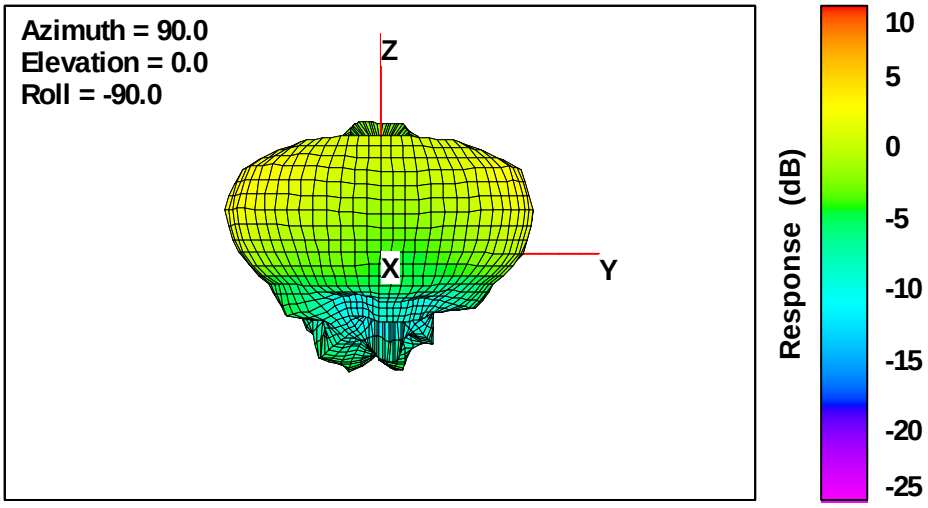

2450MHz

Total

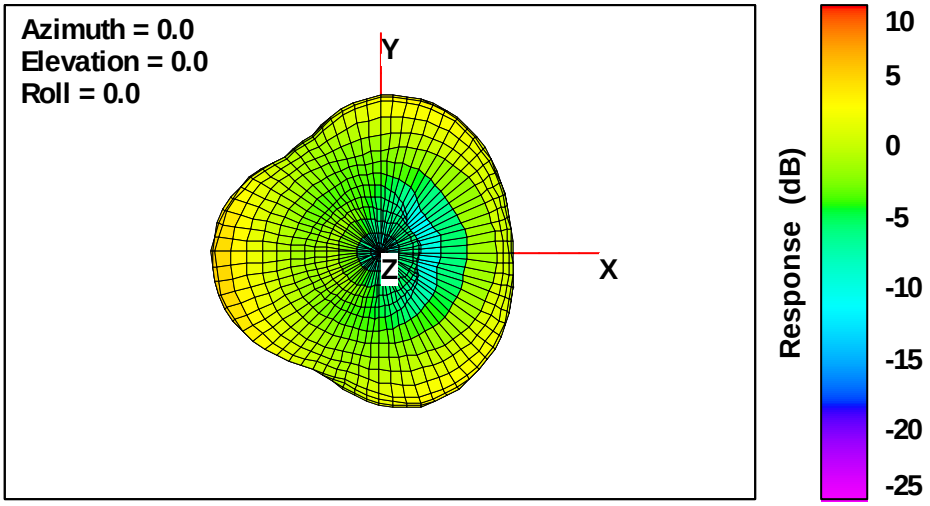

Total

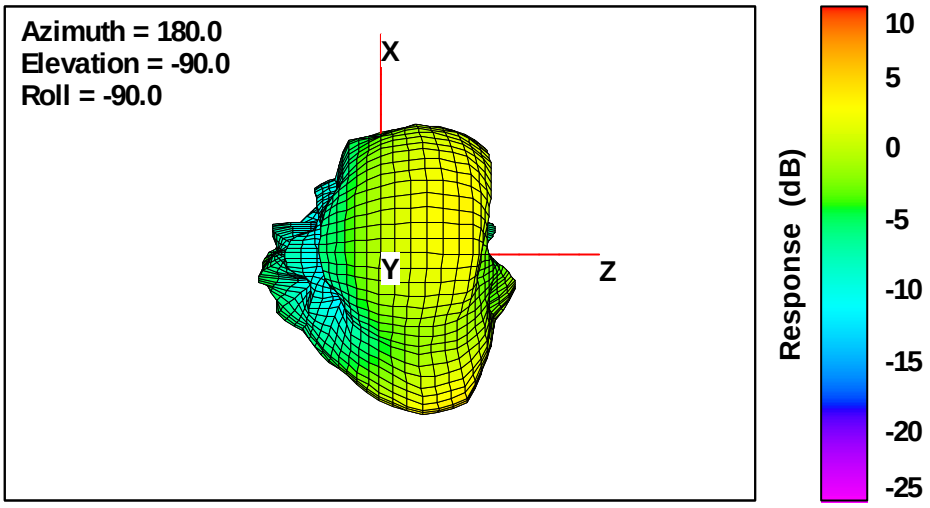

Total

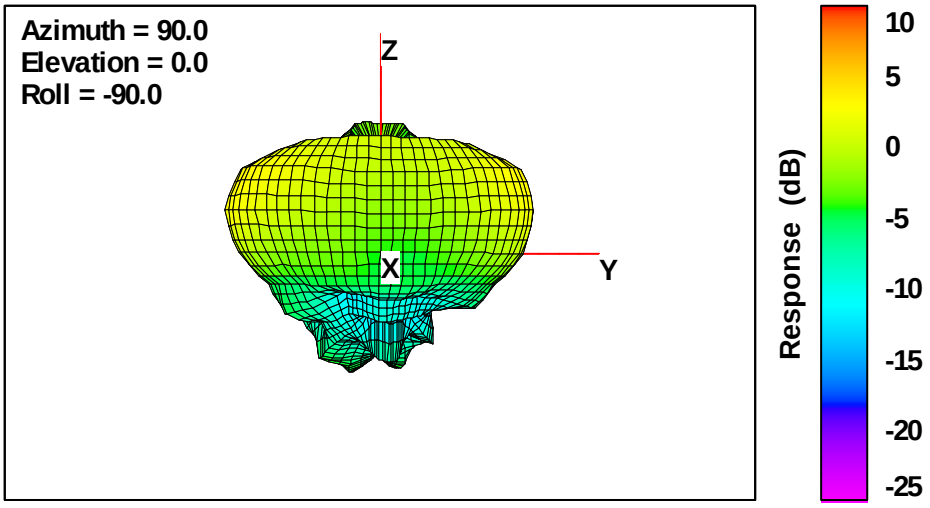

2475MHz

Total

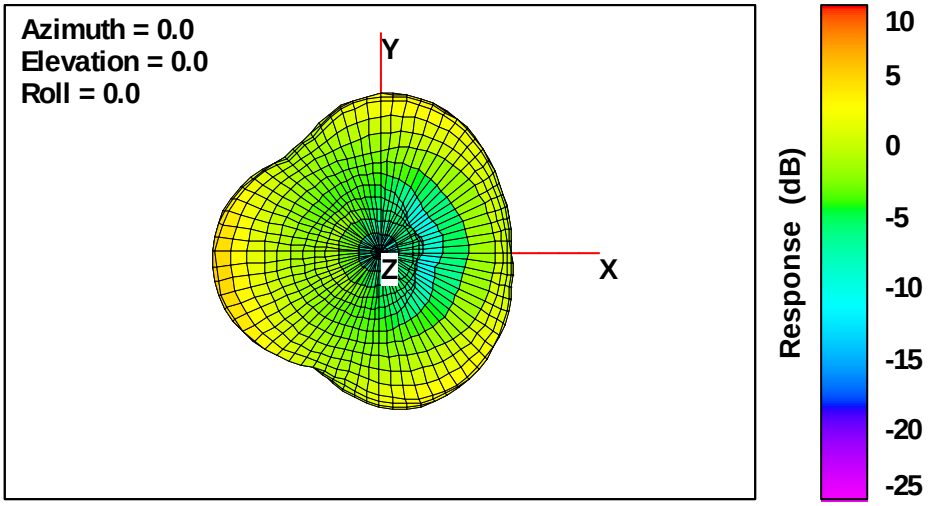

Total

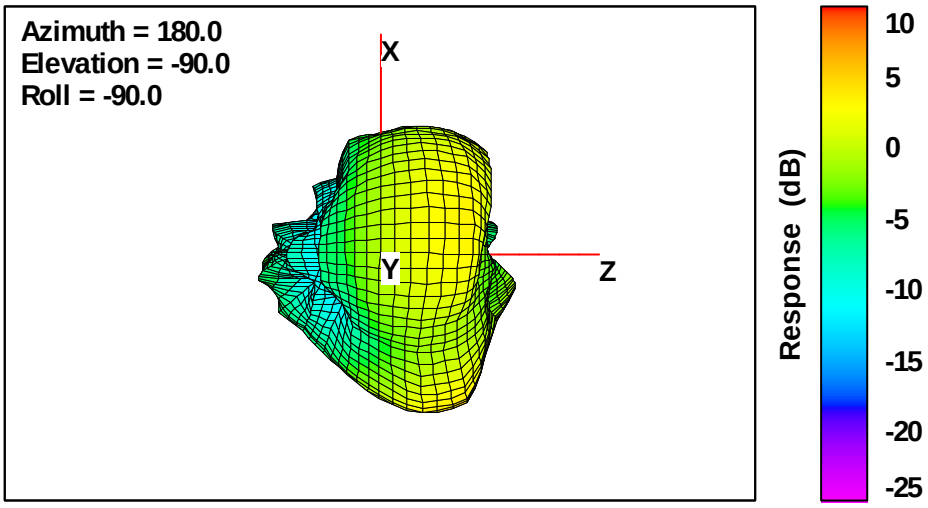

Total

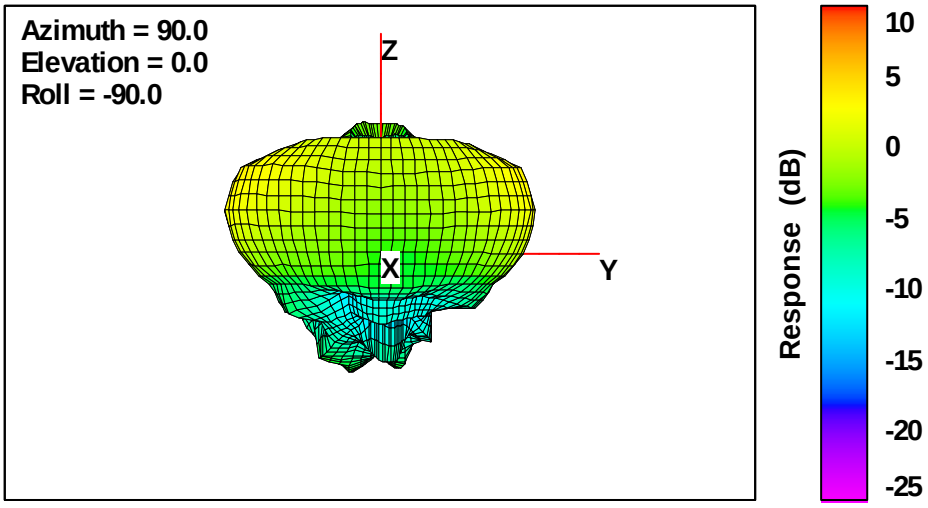

2500MHz

Total

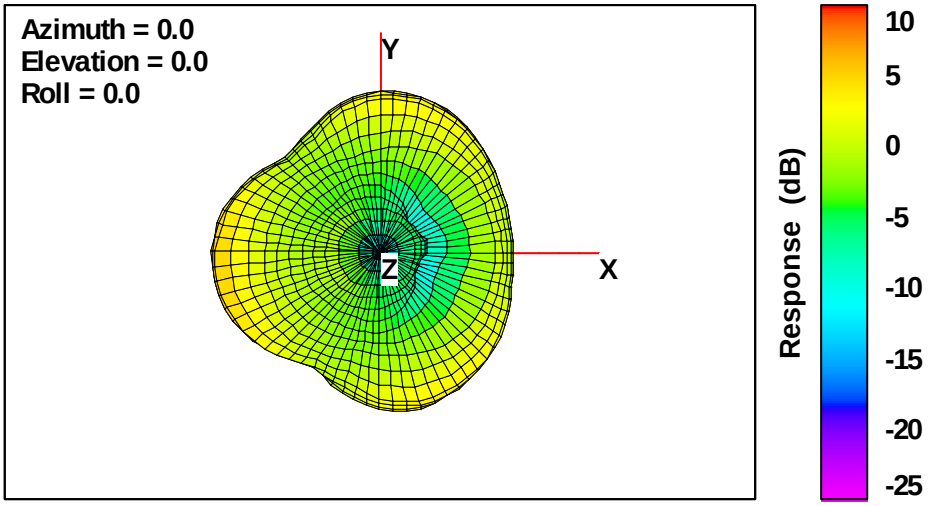

Total

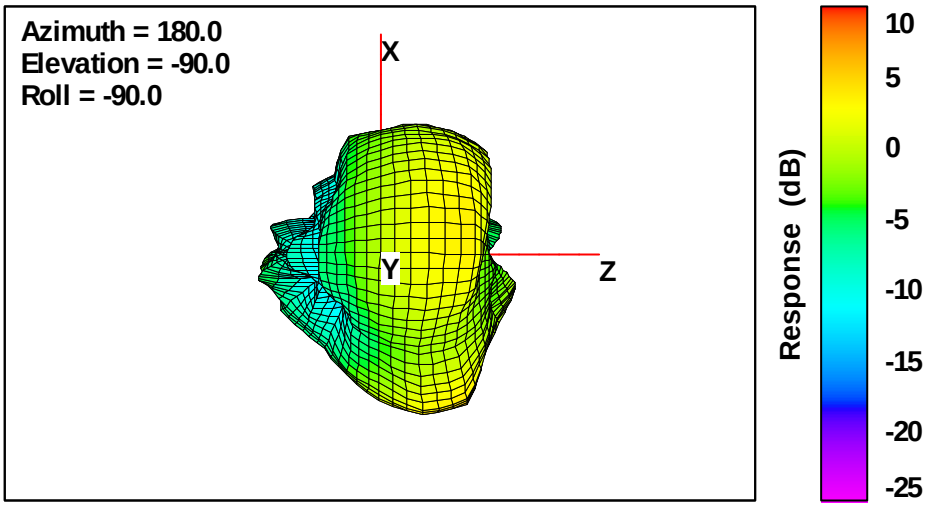

Total

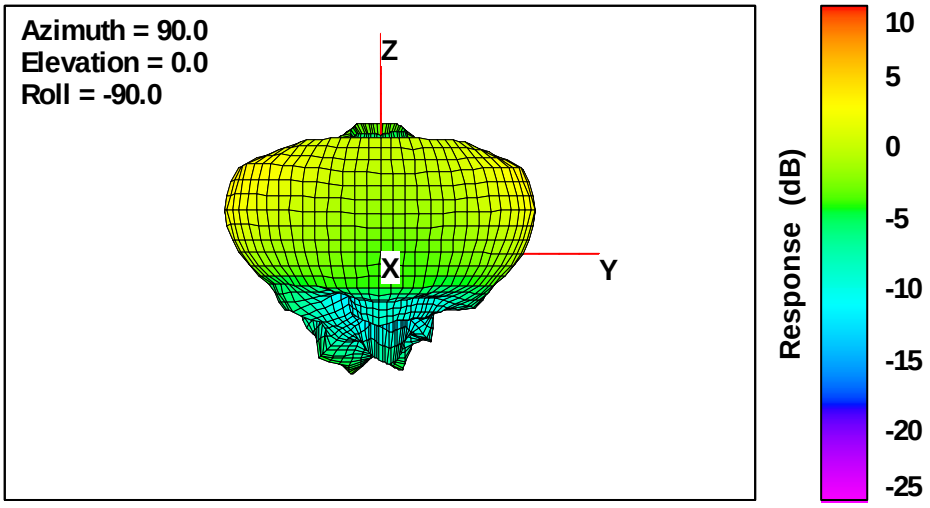

5150MHz

Total

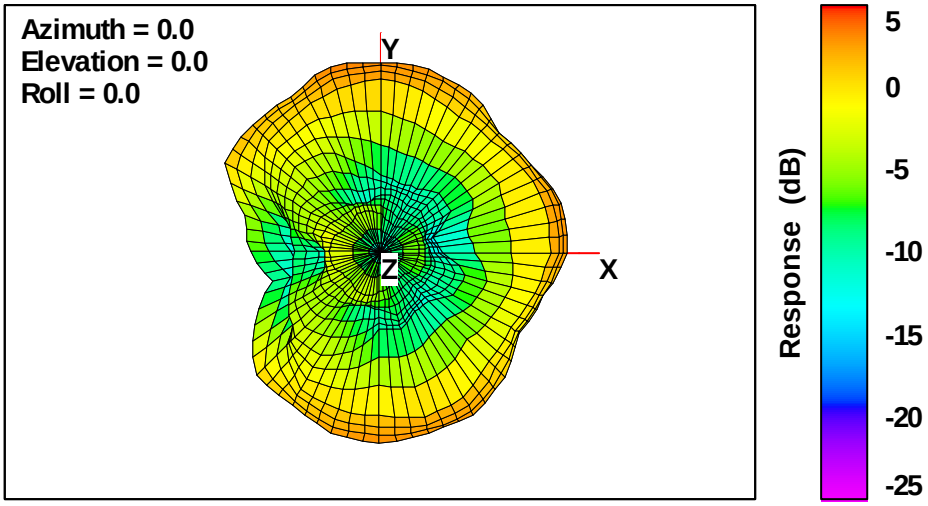

Total

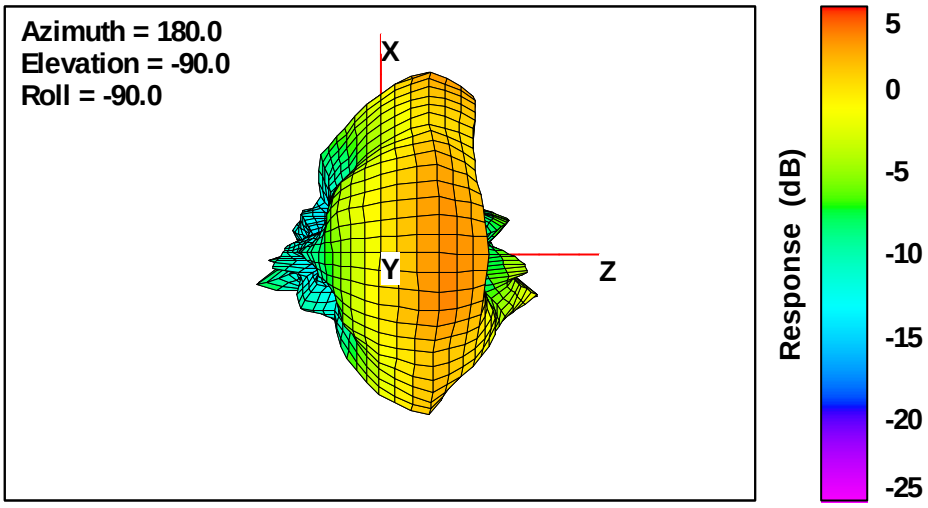

Total

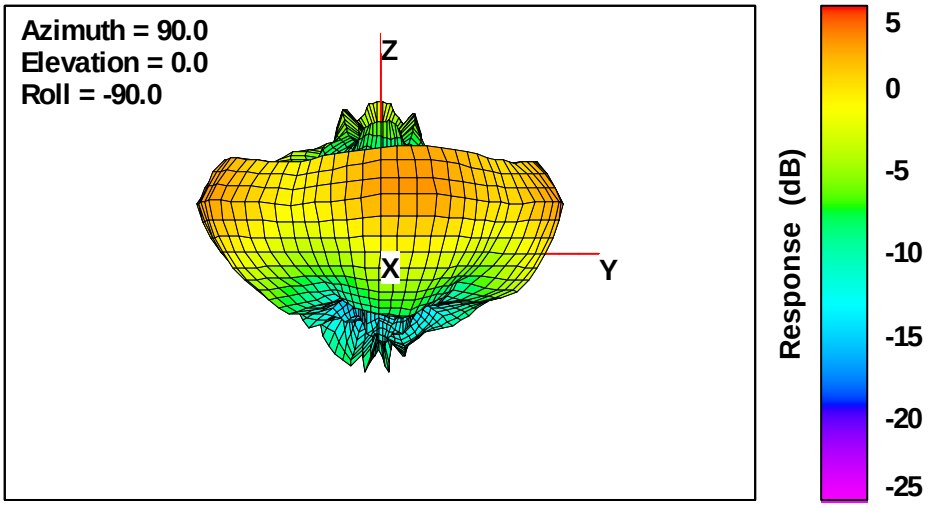

5175MHz

Total

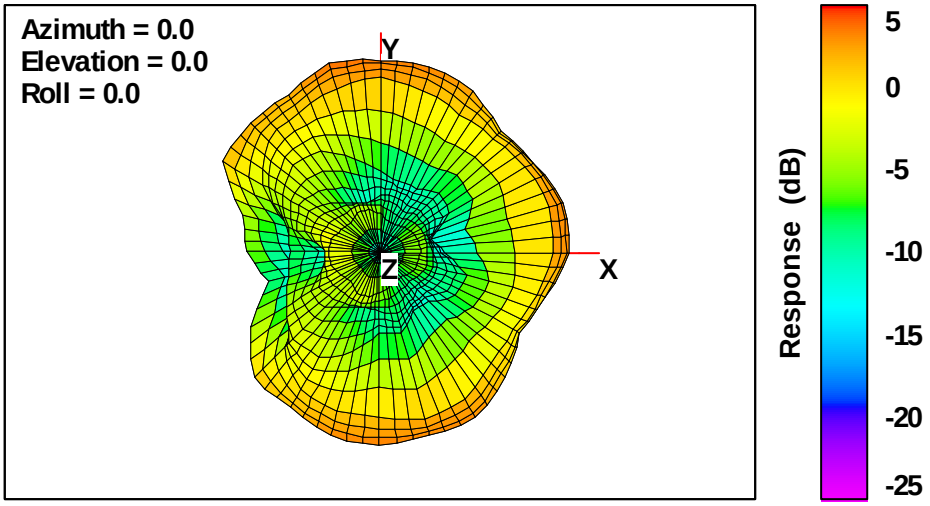

Total

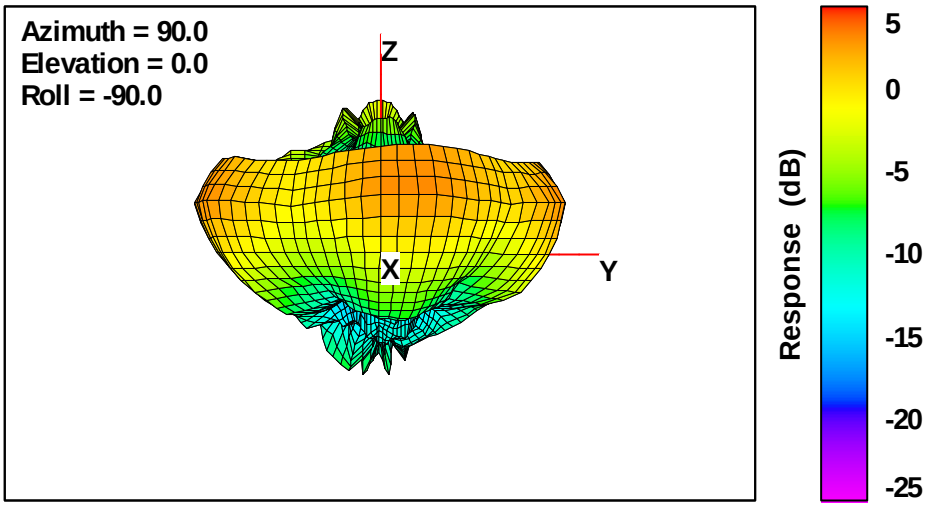

Total

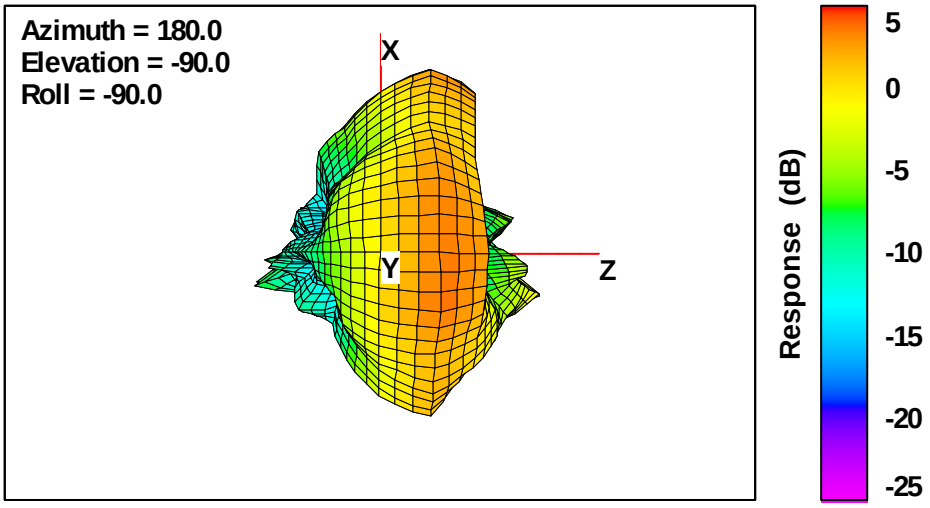

5200MHz

Total

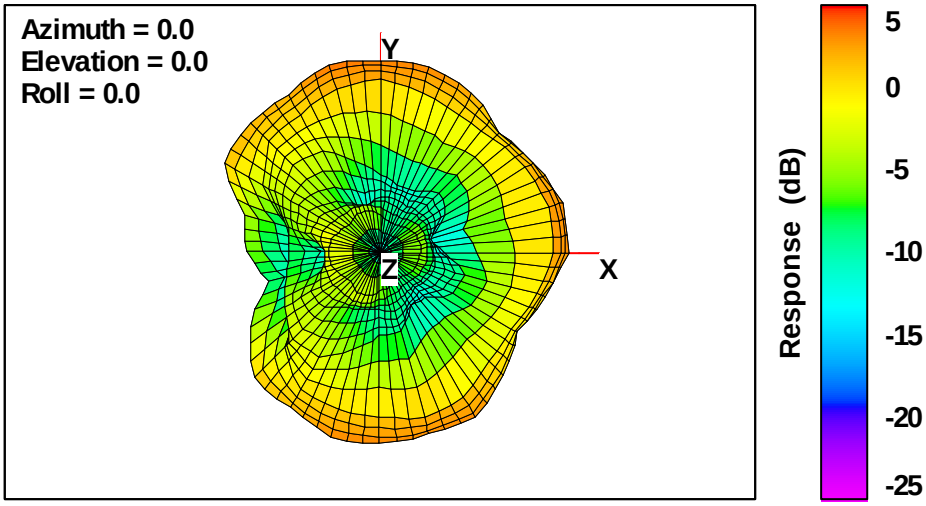

Total

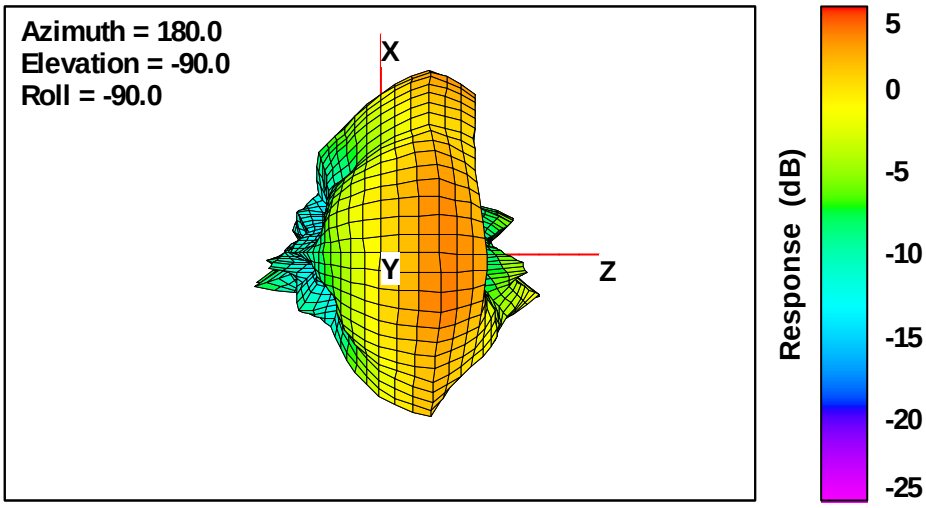

Total

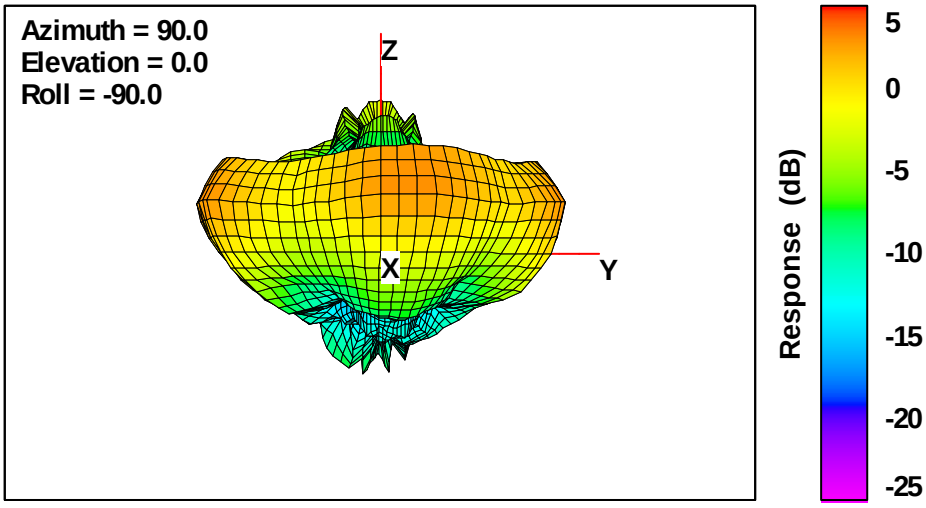

5225MHz

Total

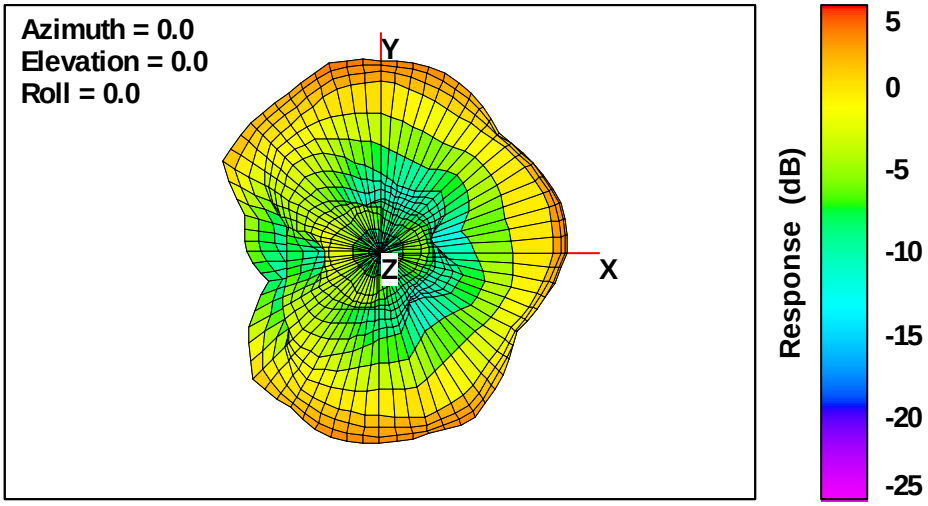

Total

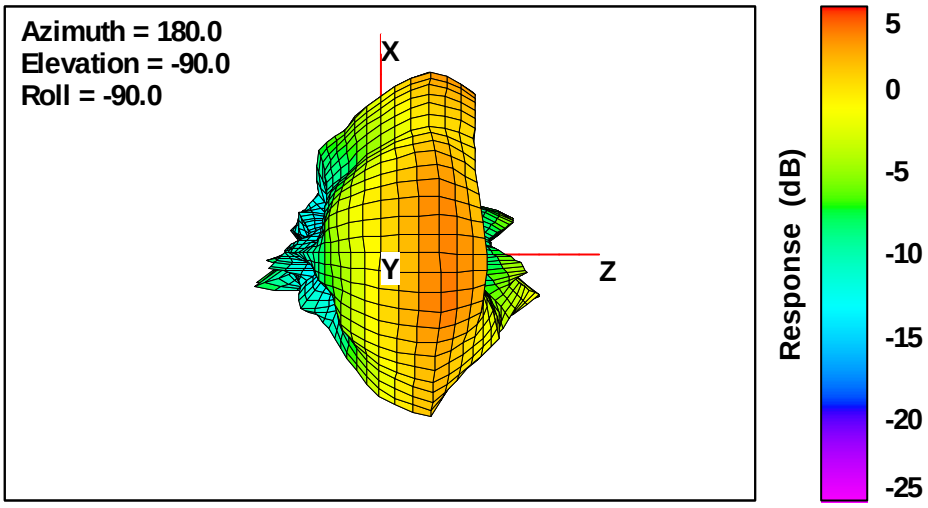

Total

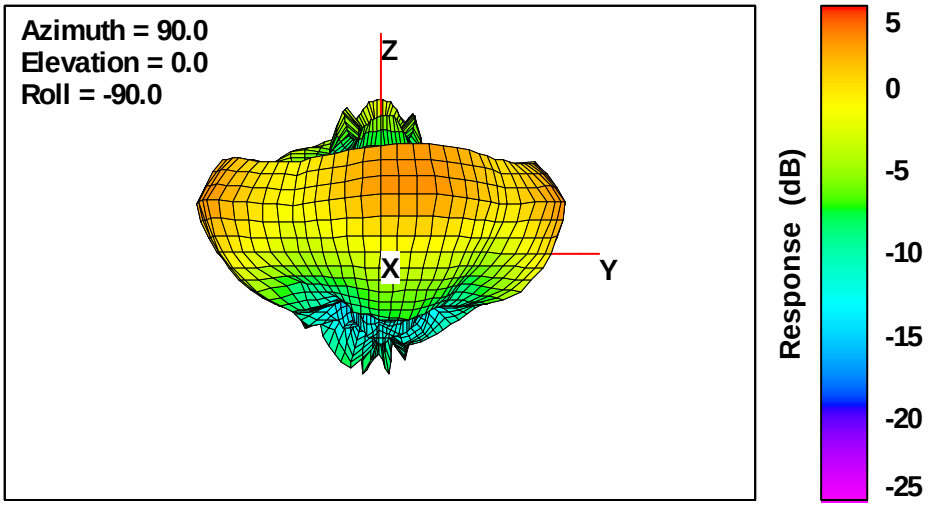

5250MHz

Total

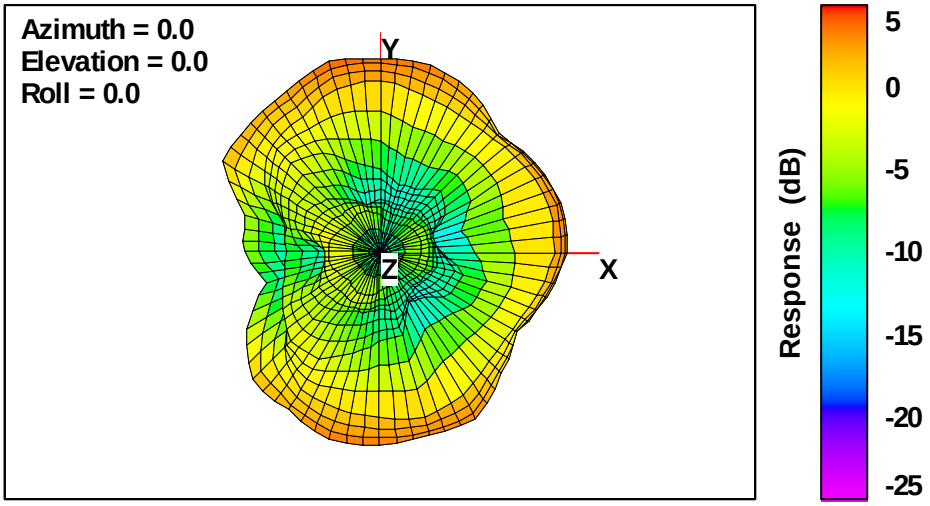

Total

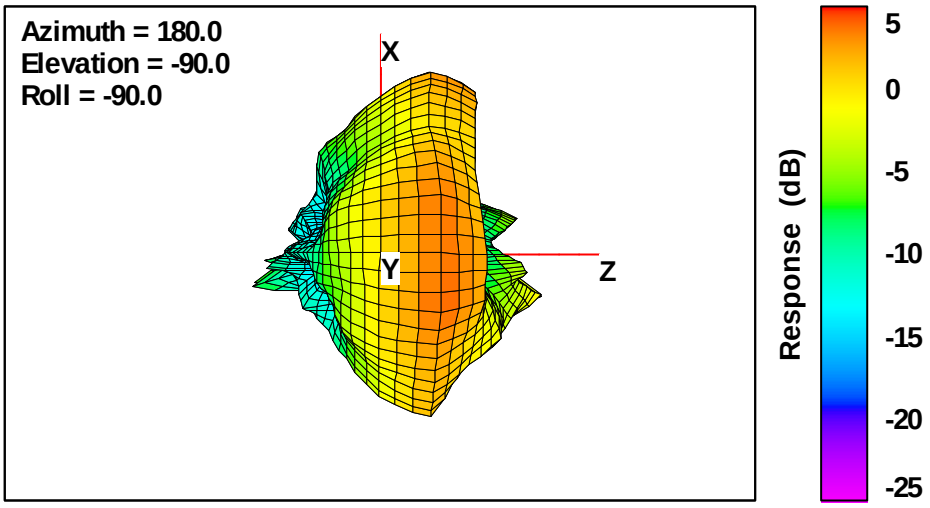

Total

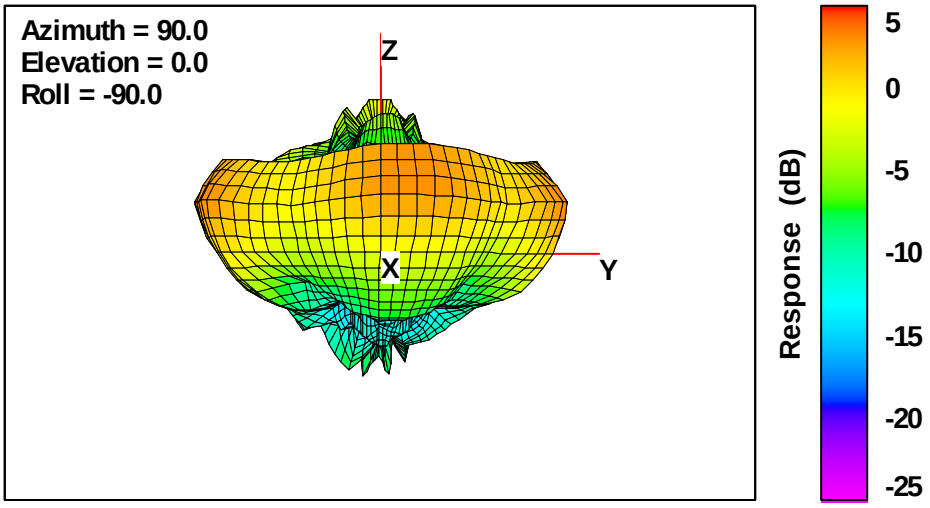

5275MHz

Total

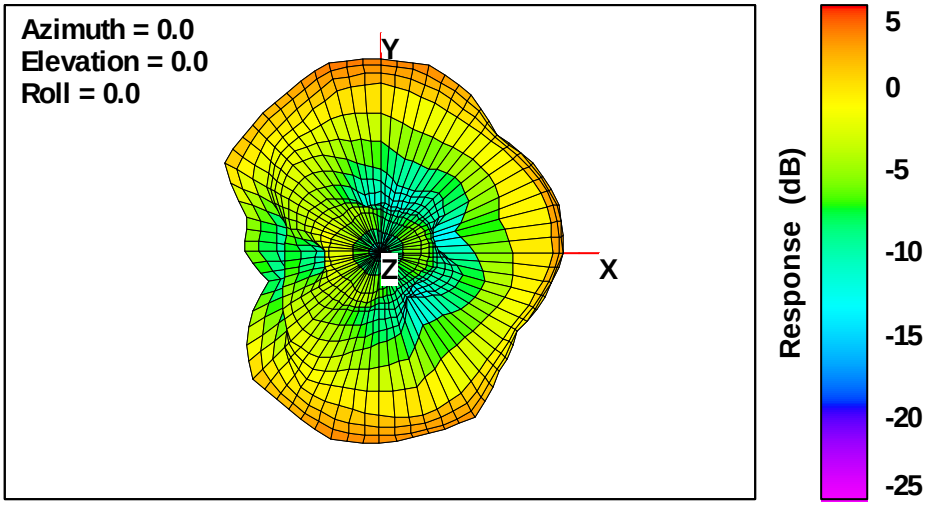

Total

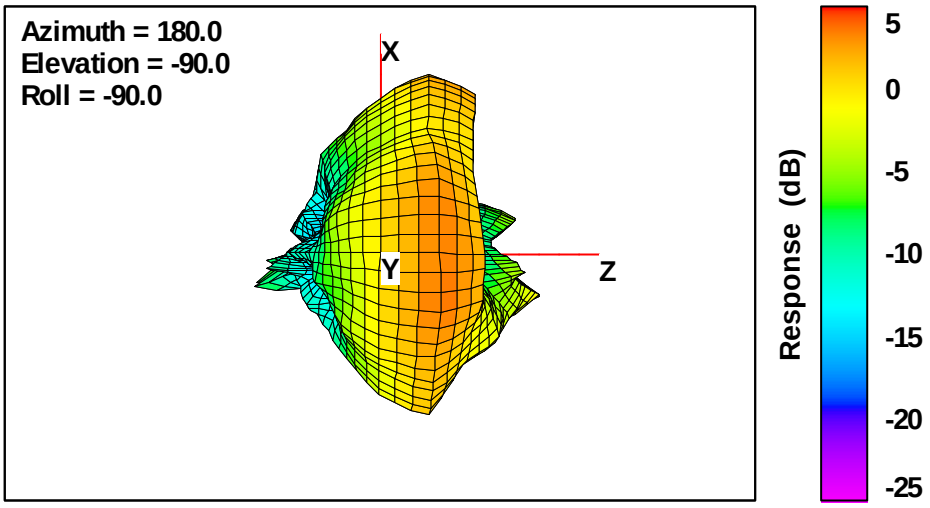

Total

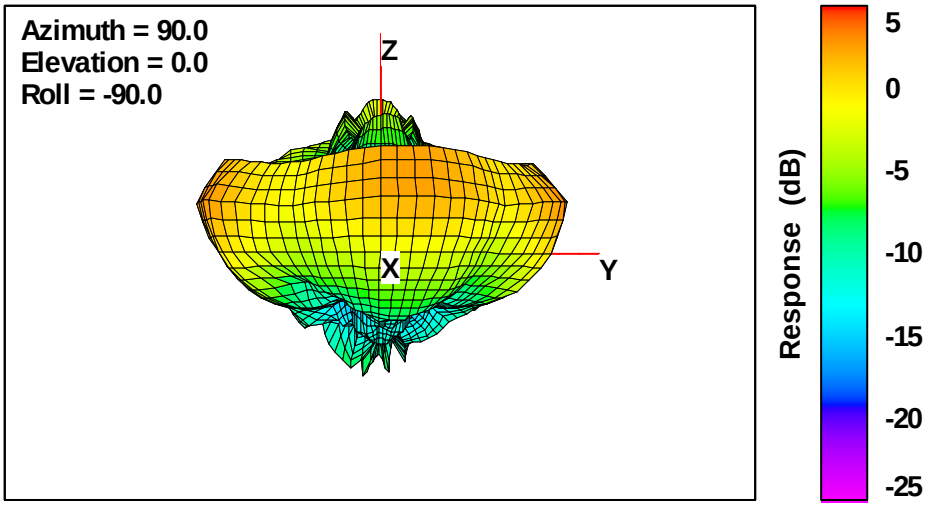

5300MHz

Total

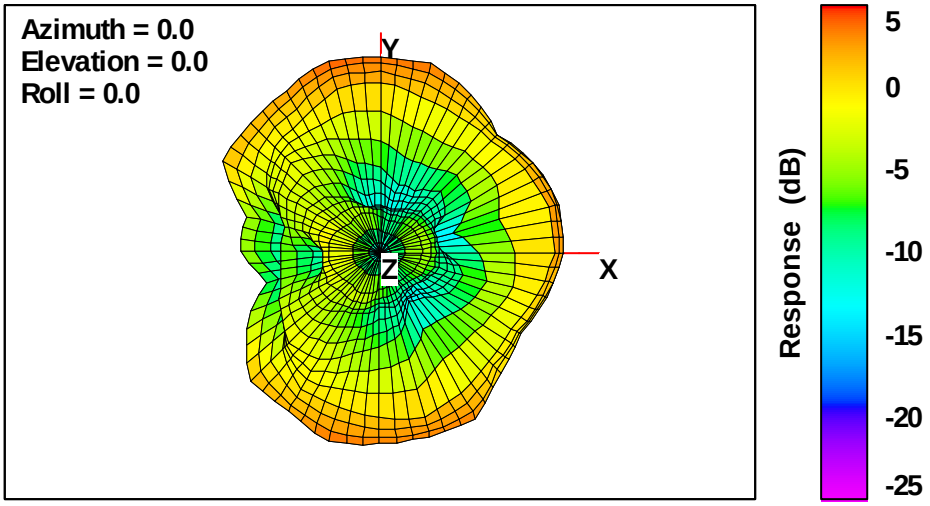

Total

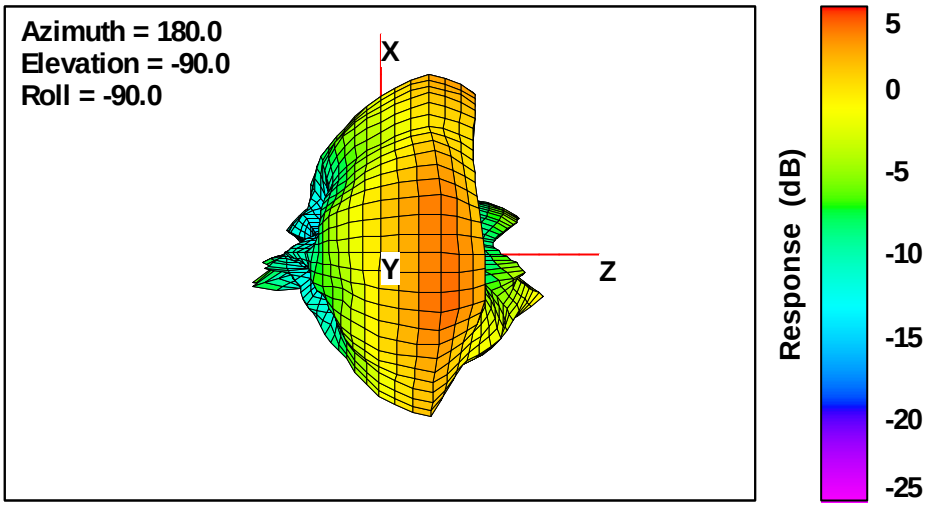

Total

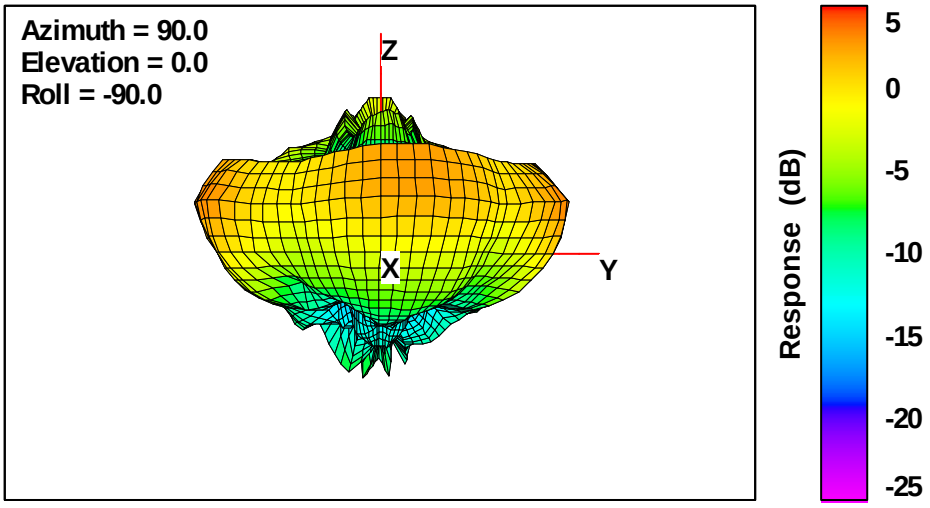

5325MHz

Total

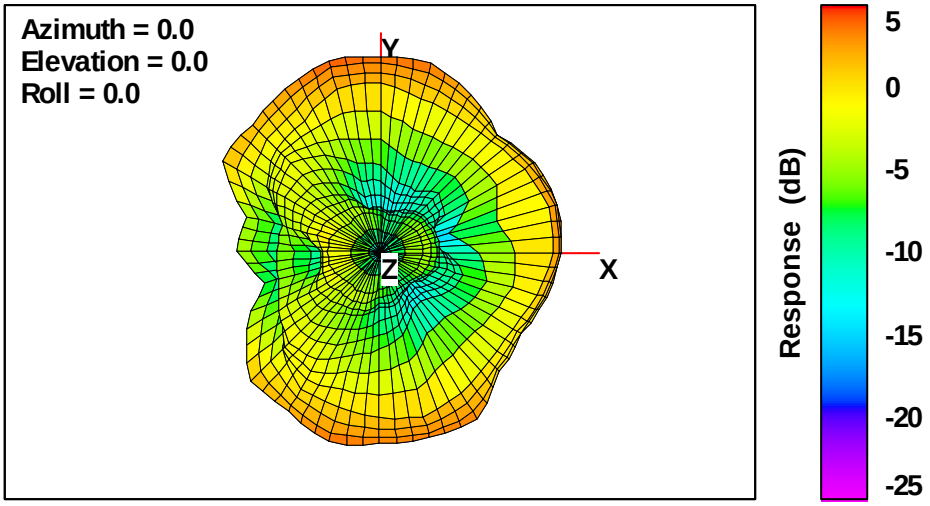

Total

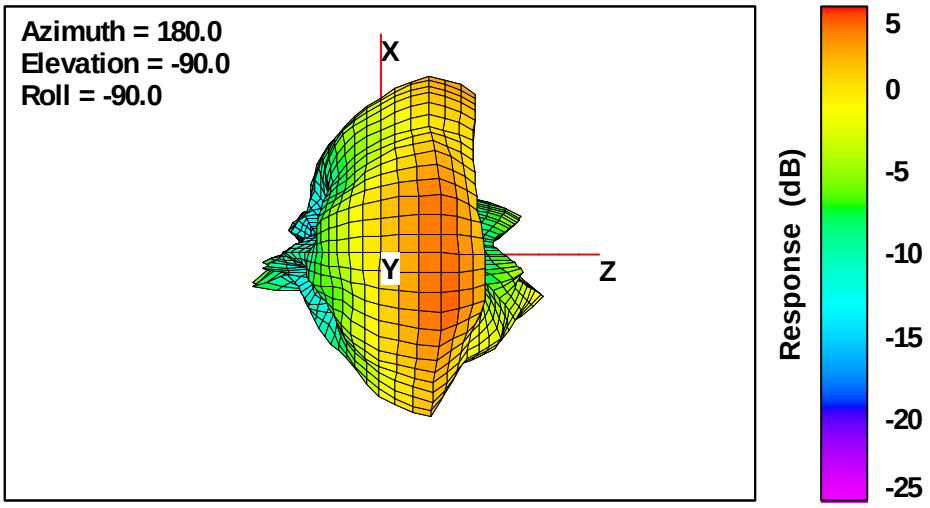

Total

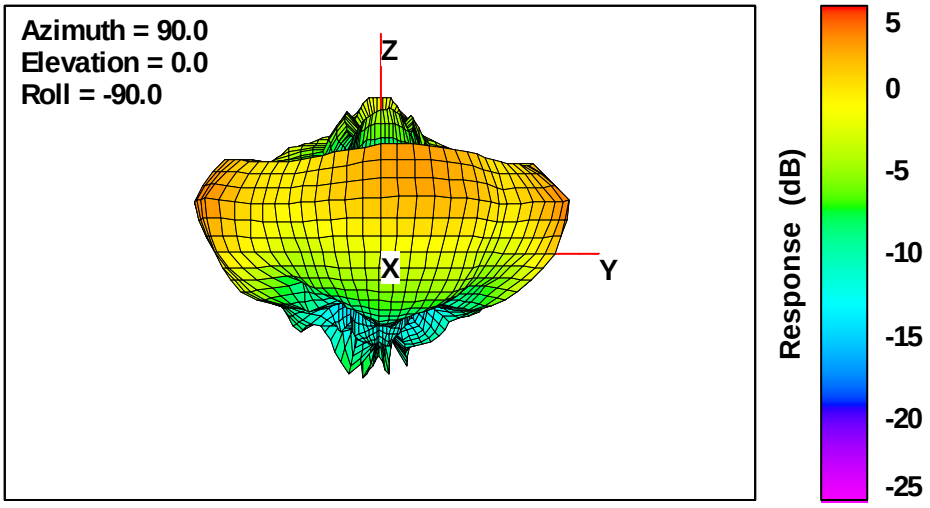

5350MHz

Total

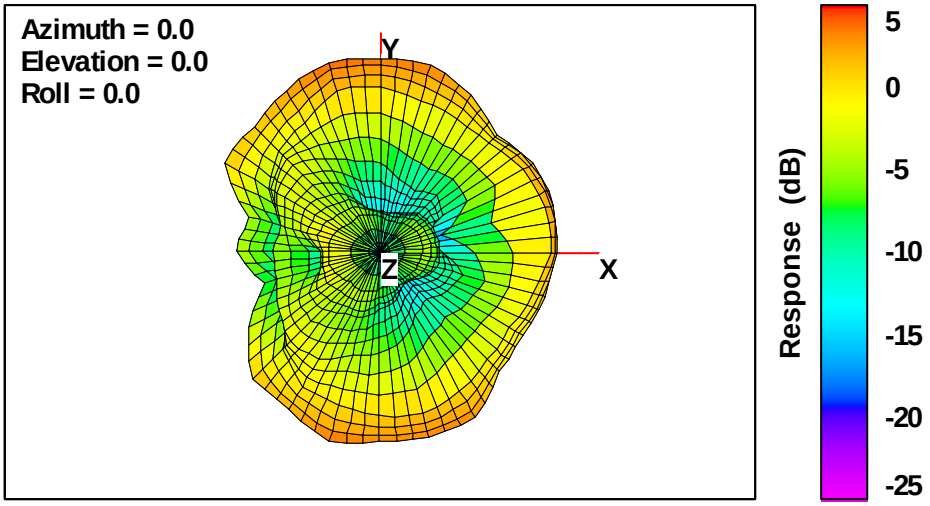

Total

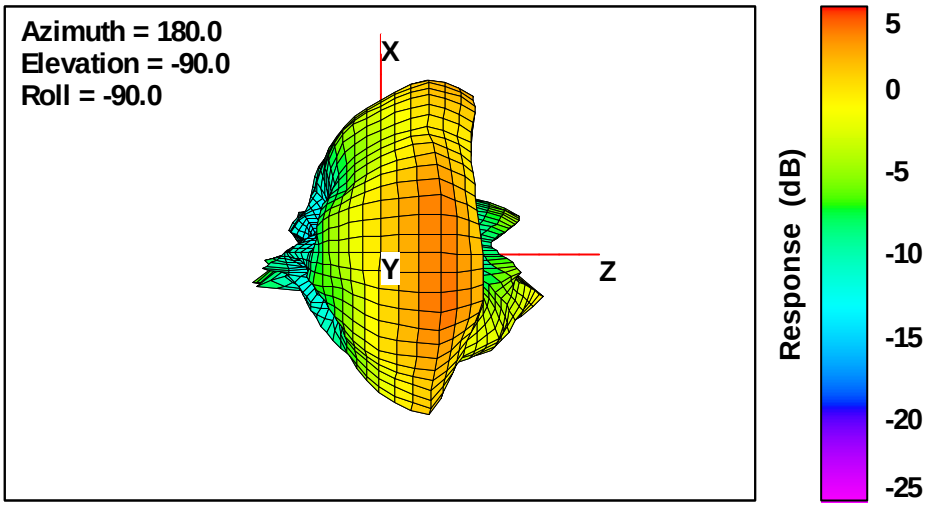

Total

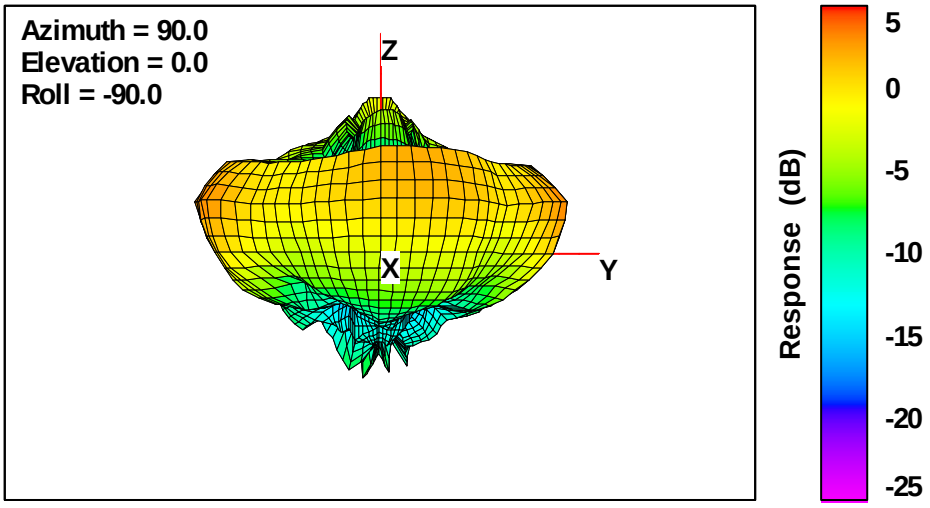

5375MHz

Total

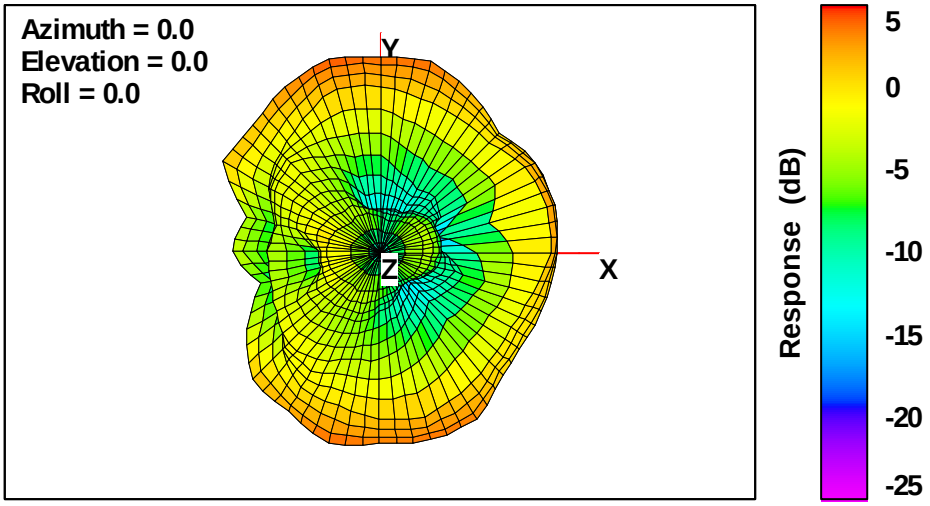

Total

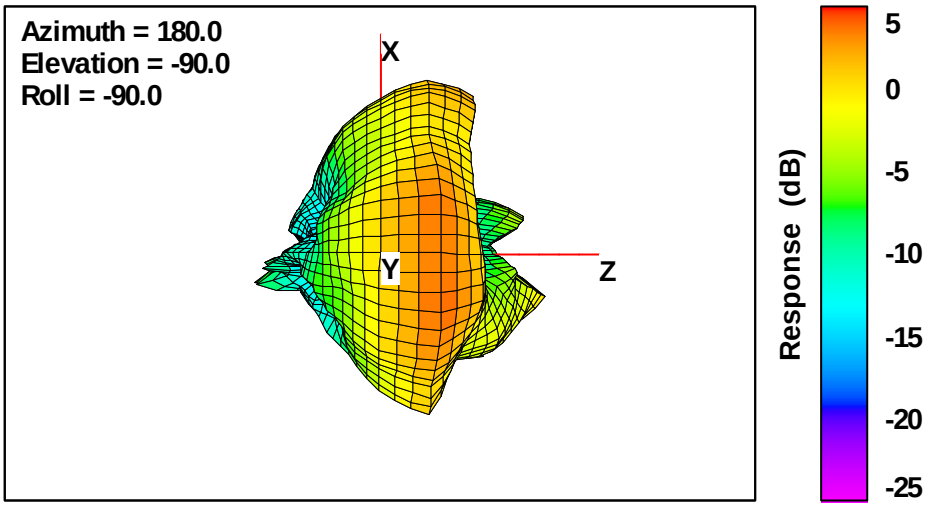

Total

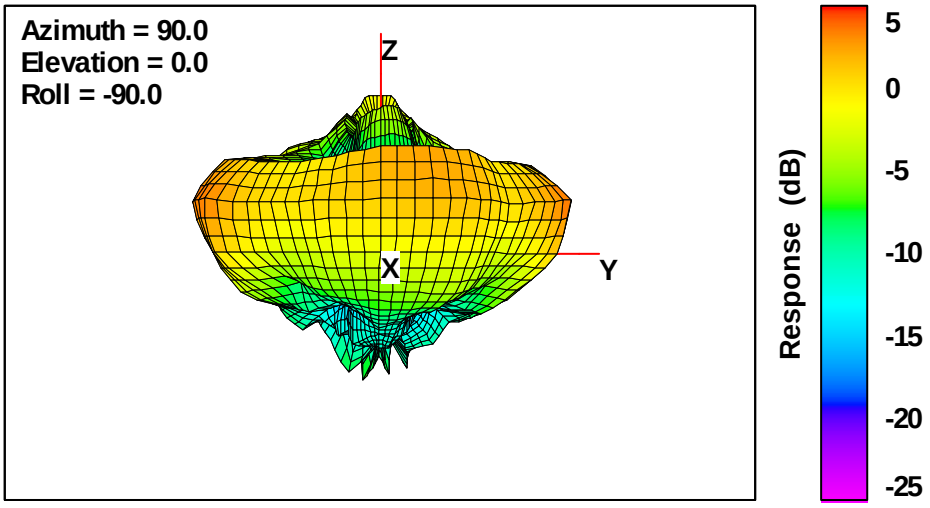

5400MHz

Total

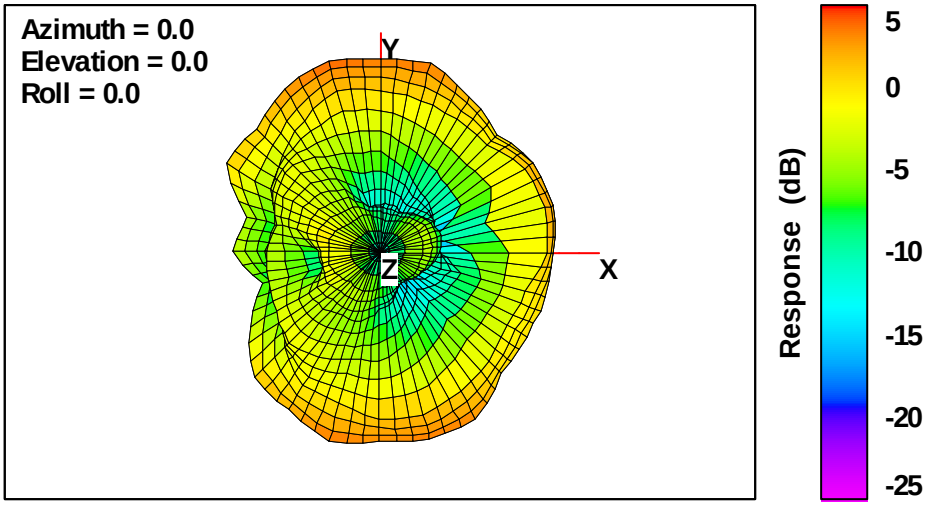

Total

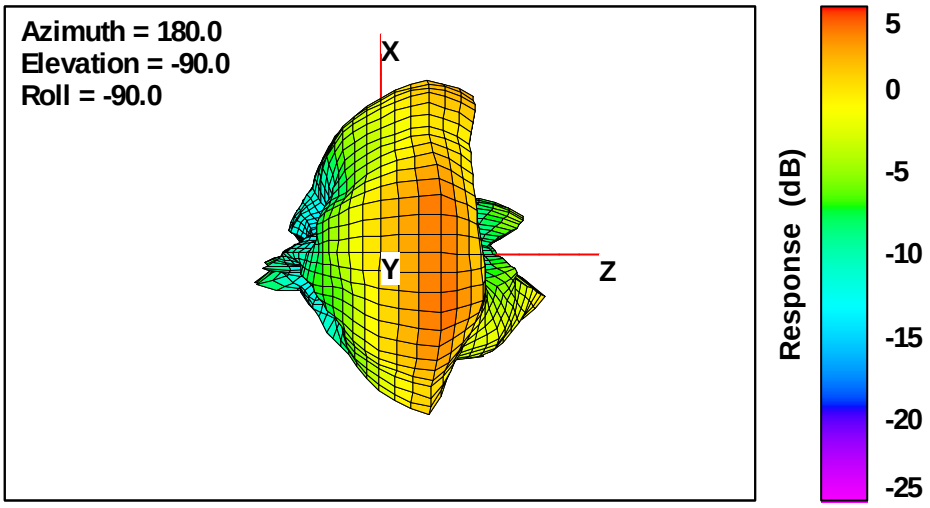

Total

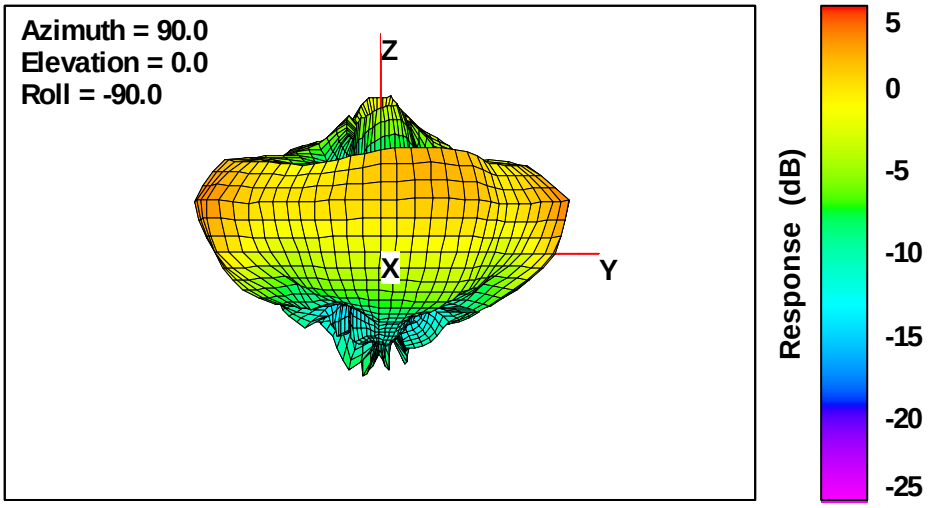

5425MHz

Total

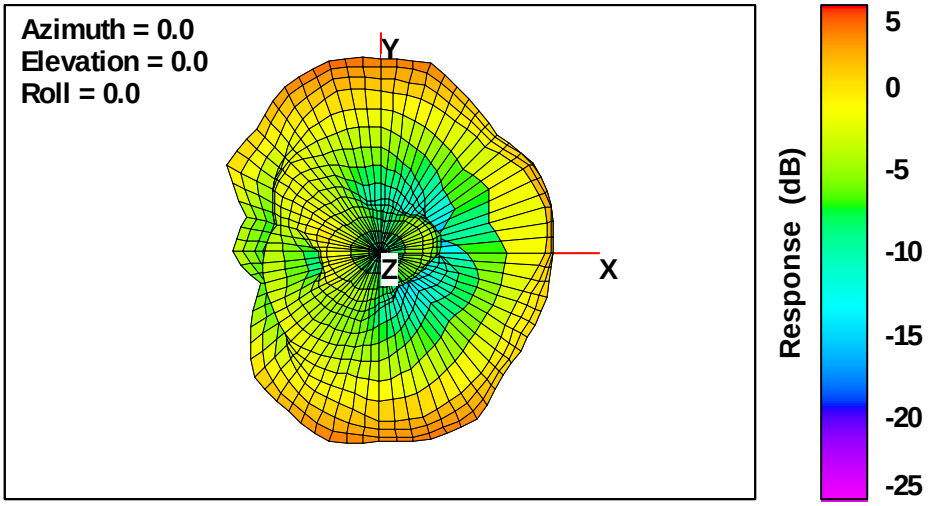

Total

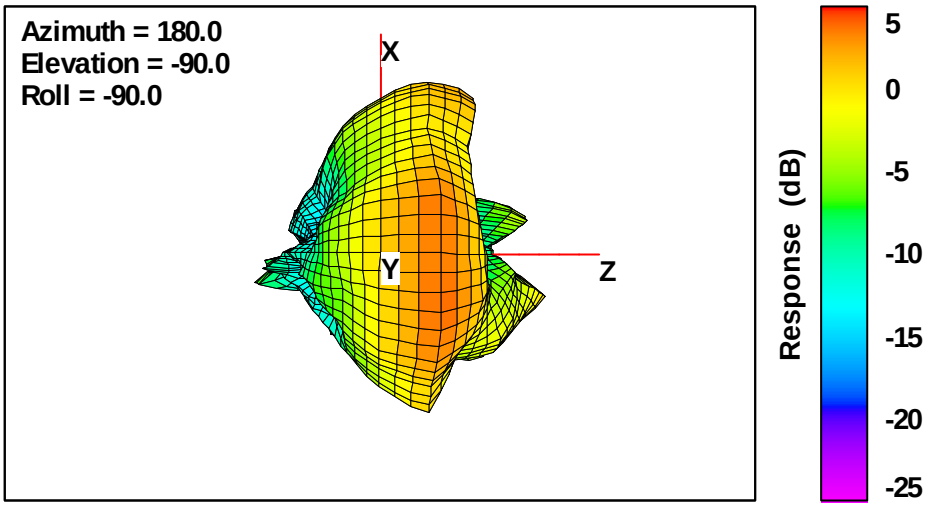

Total

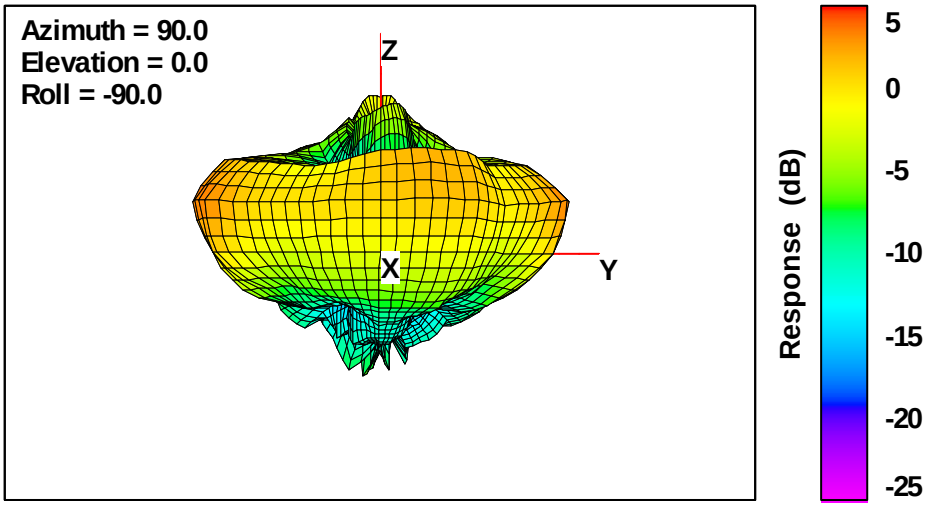

5450MHz

Total

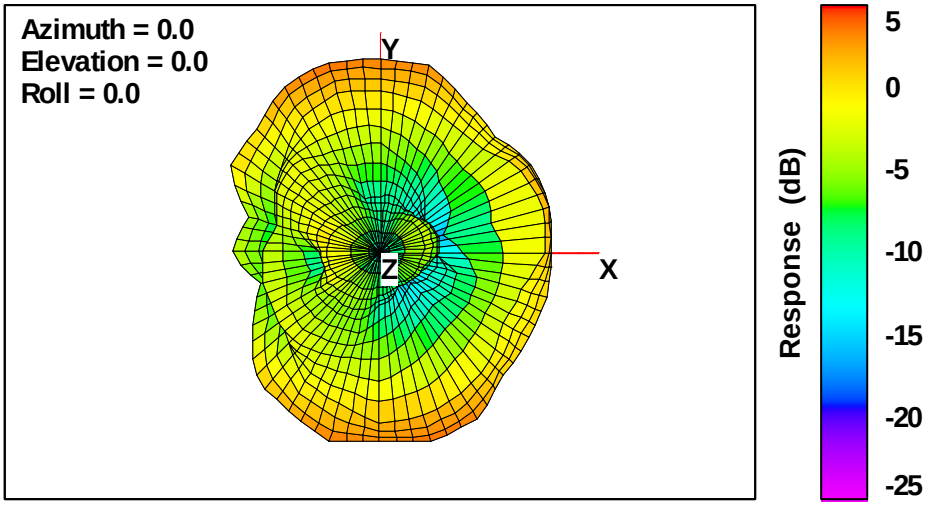

Total

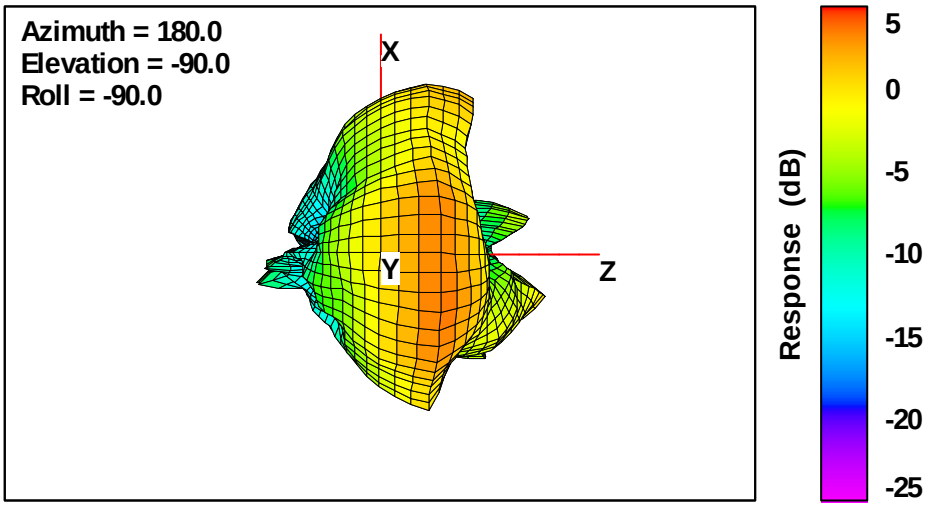

Total

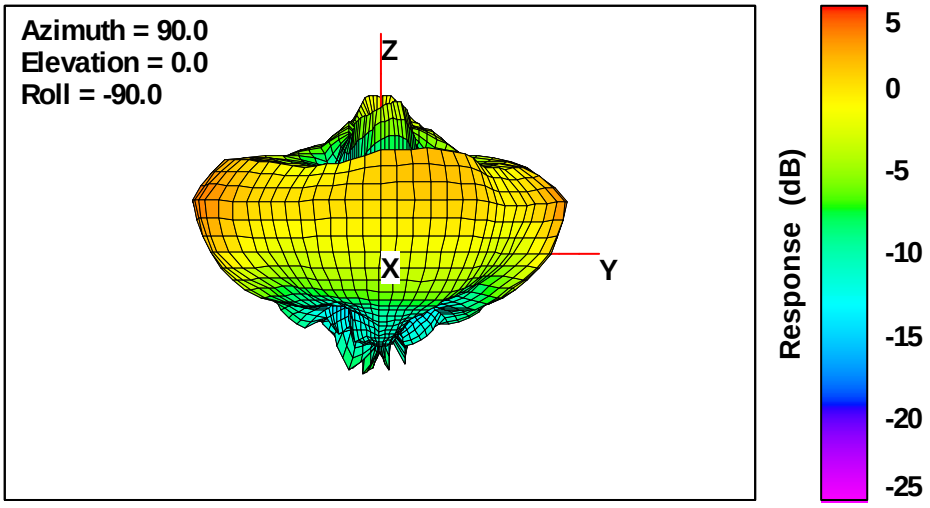

5475MHz

Total

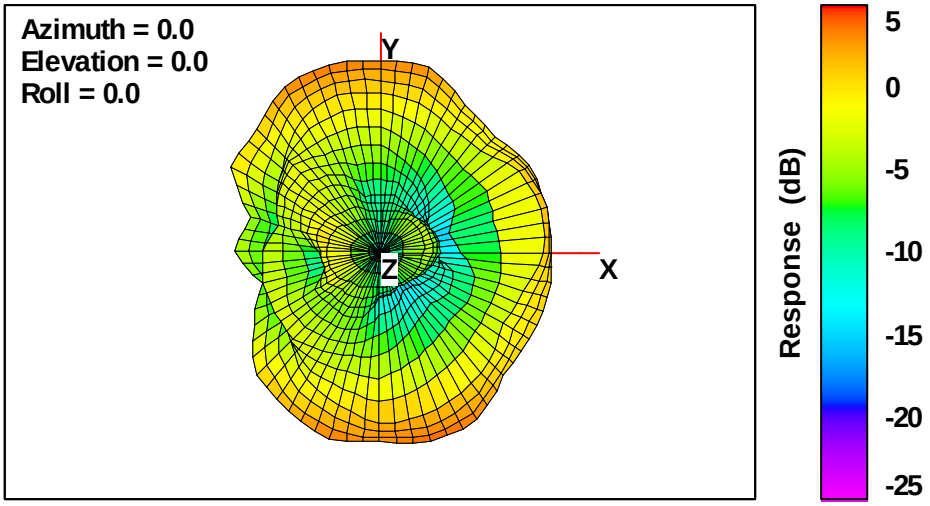

Total

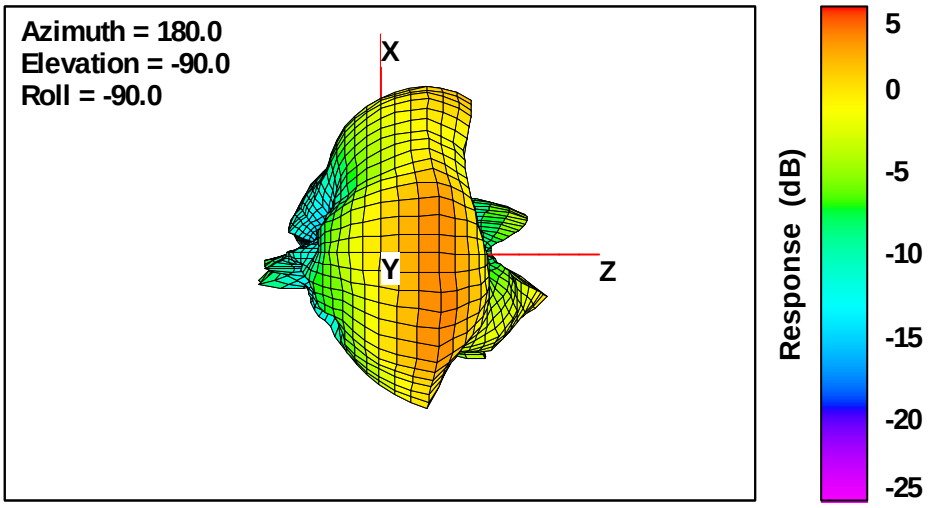

Total

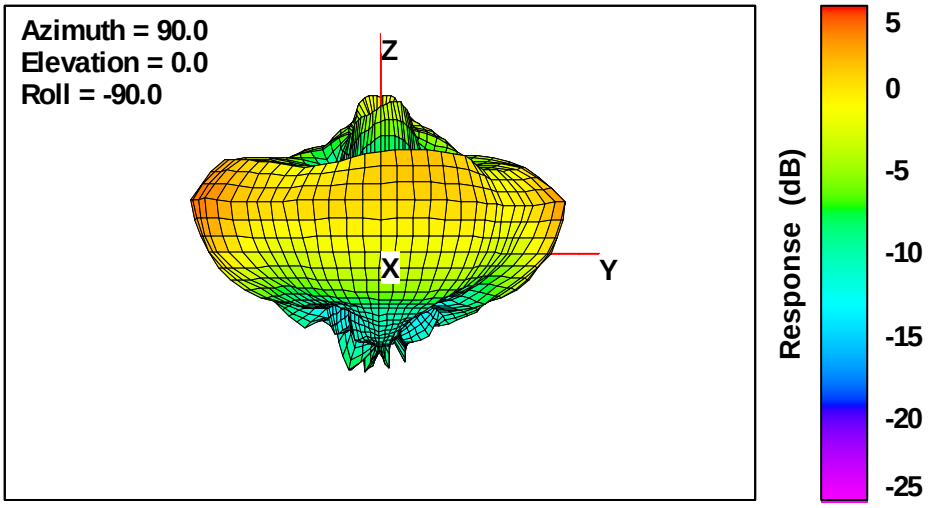

5500MHz

Total

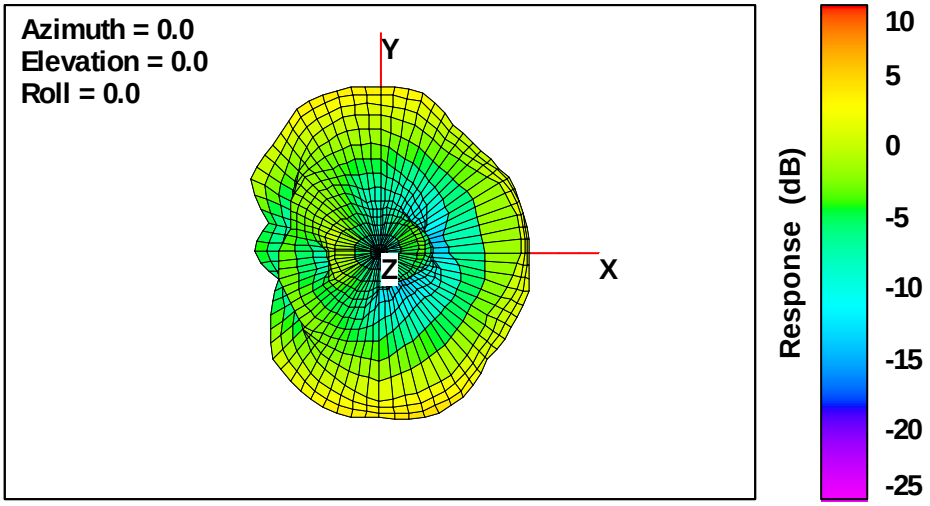

Total

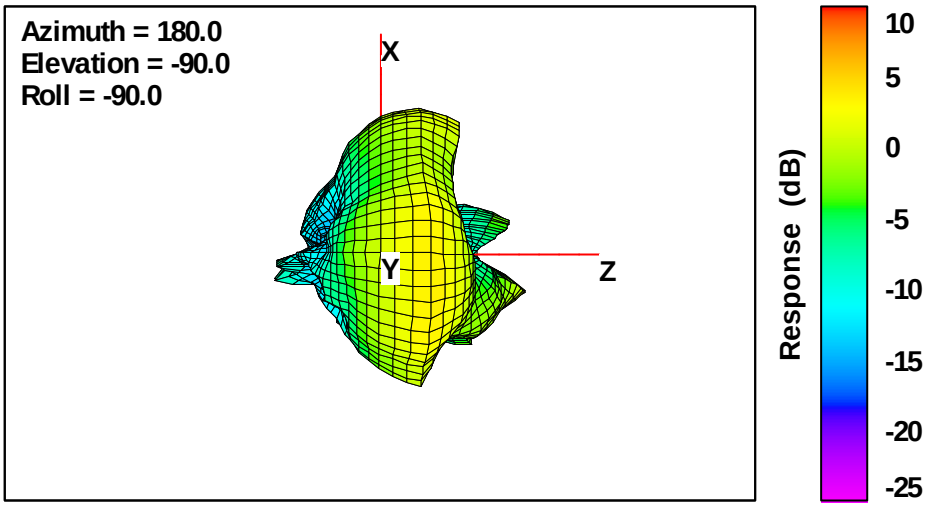

Total

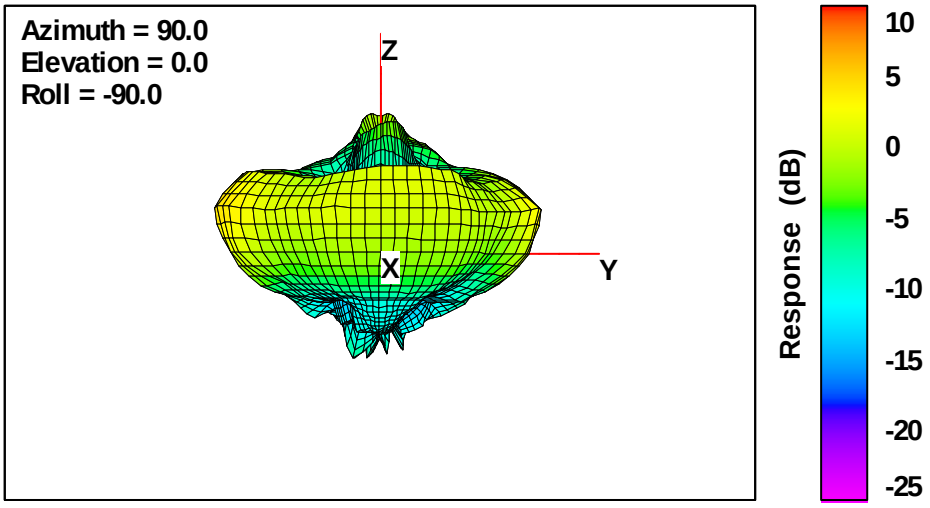

5525MHz

Total

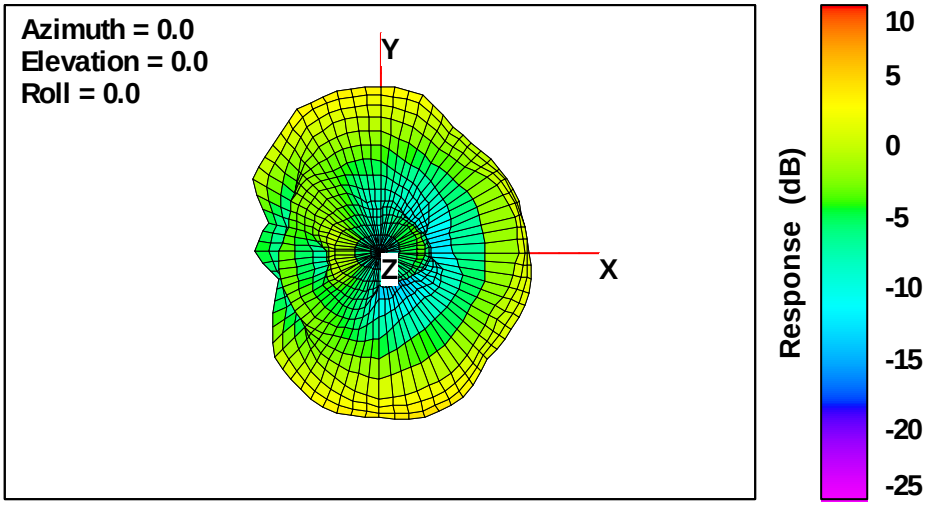

Total

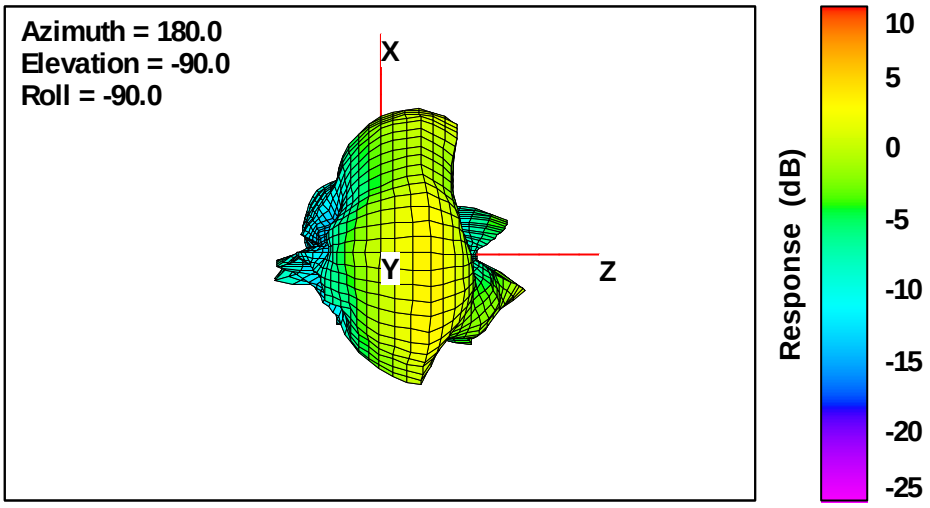

Total

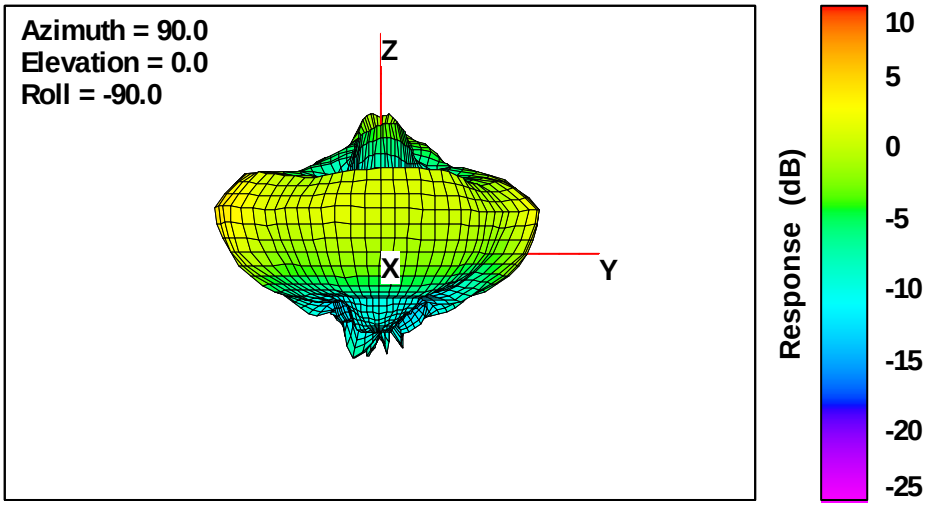

5550MHz

Total

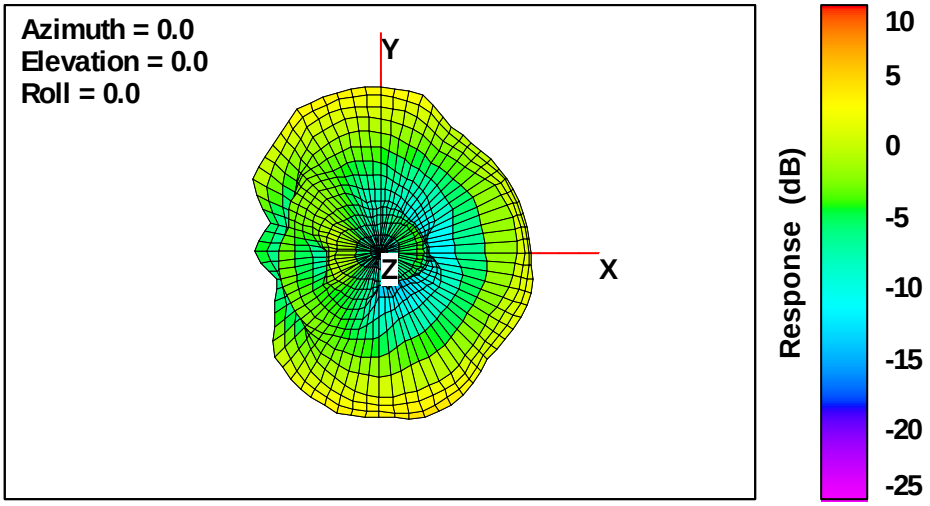

Total

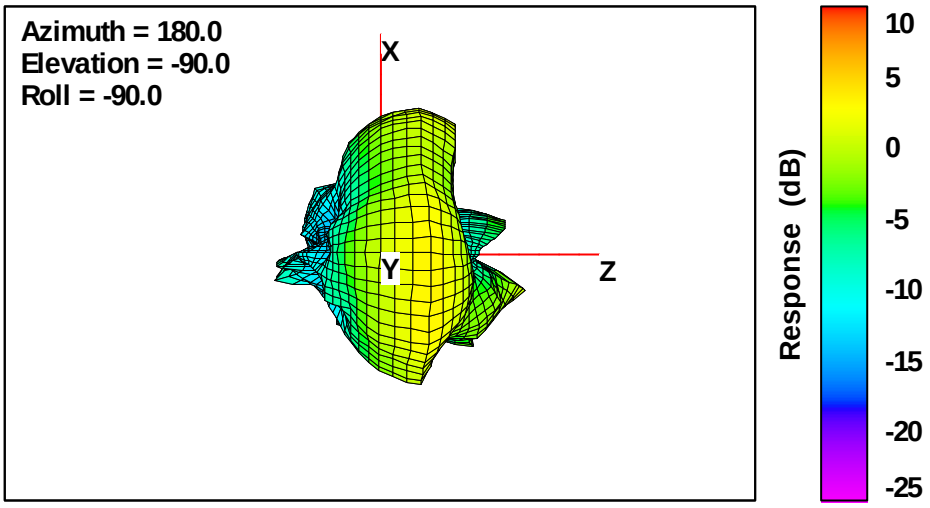

Total

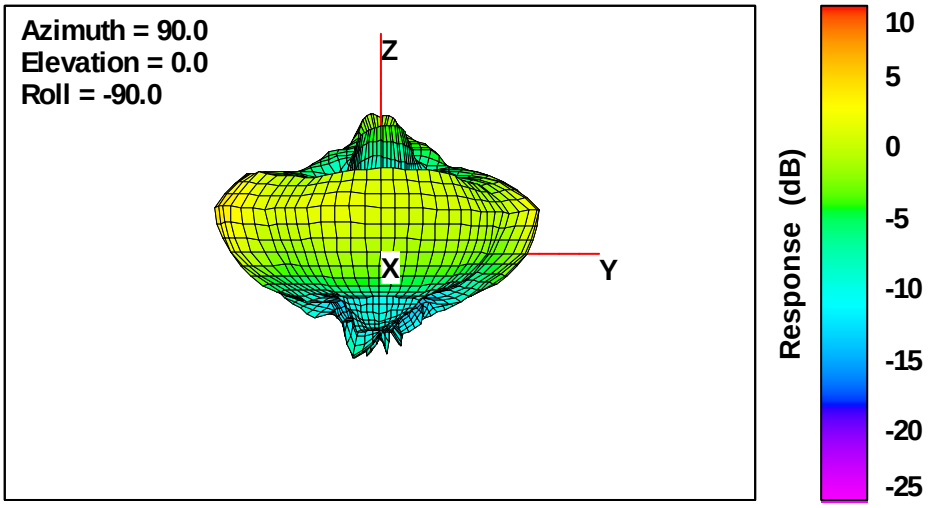

5575MHz

Total

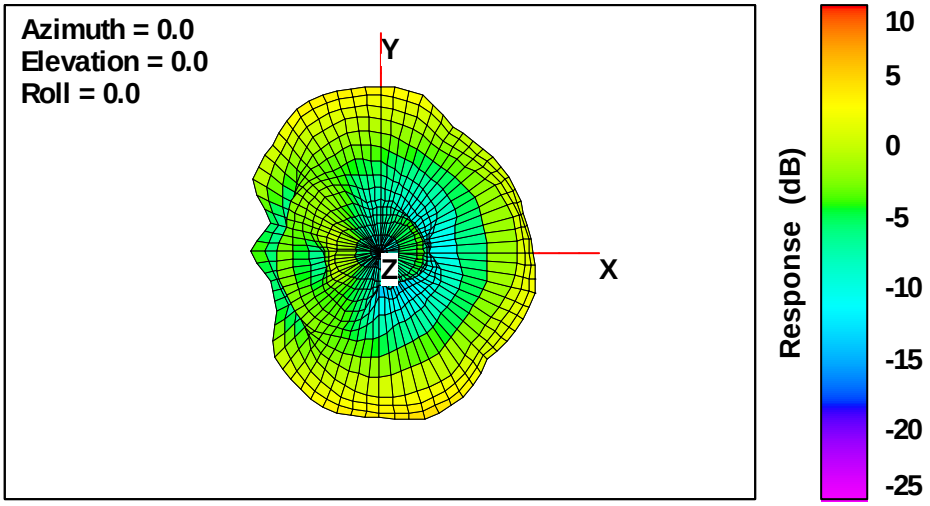

Total

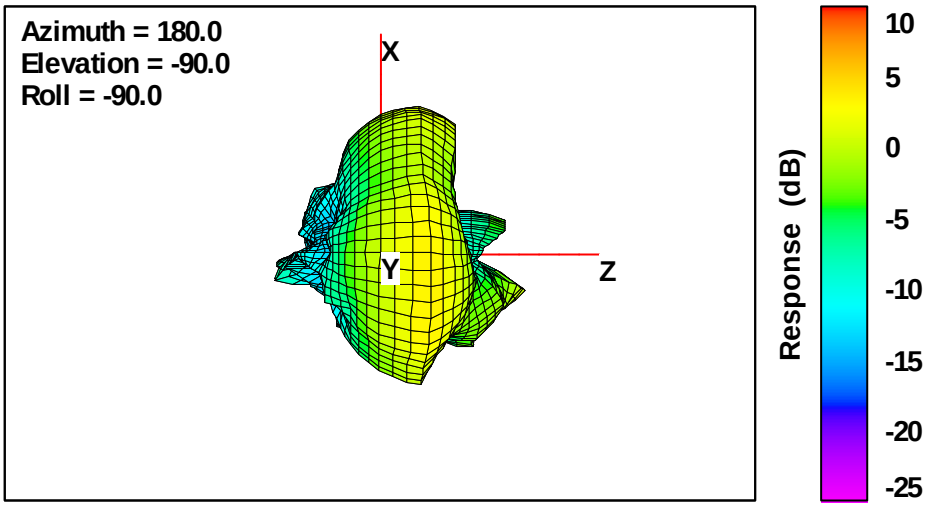

Total

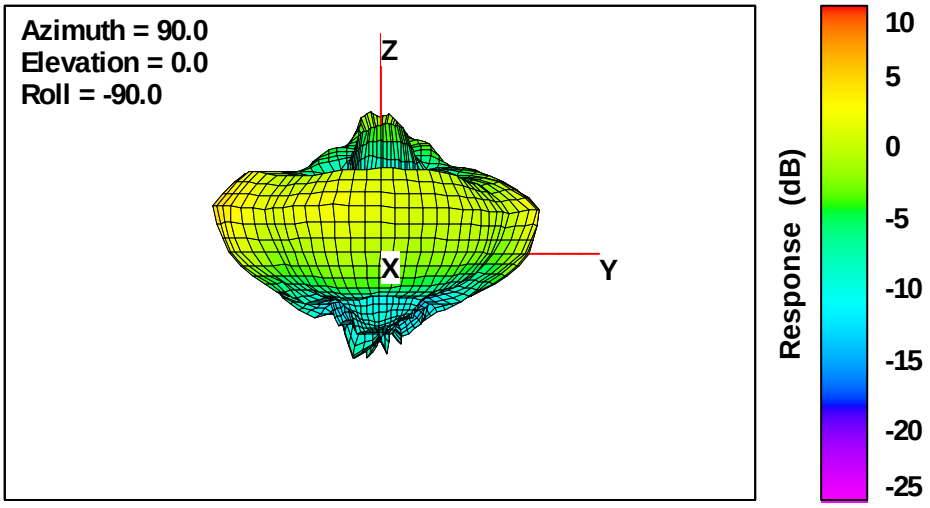

5600MHz

Total

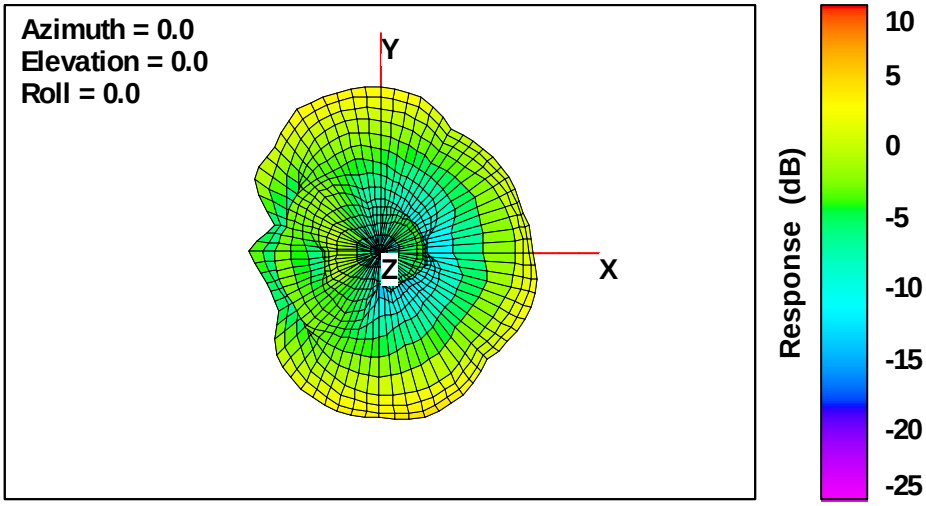

Total

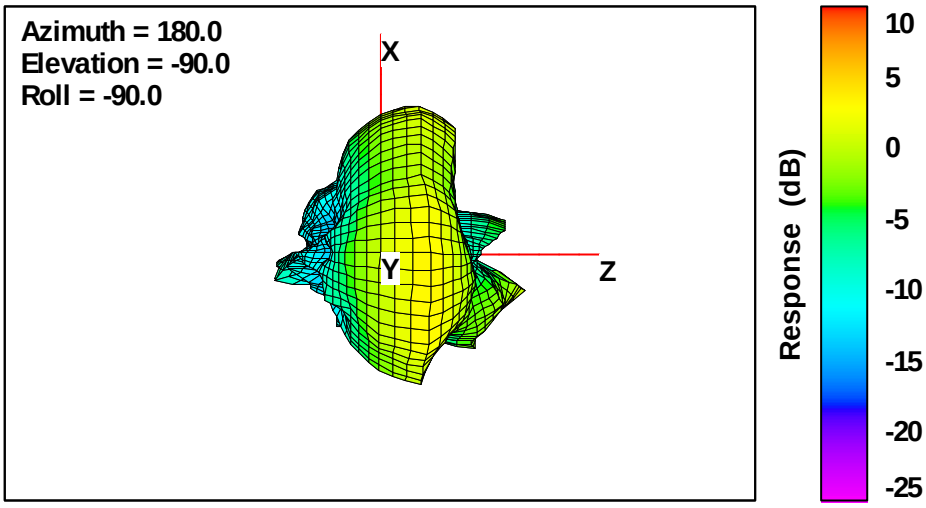

Total

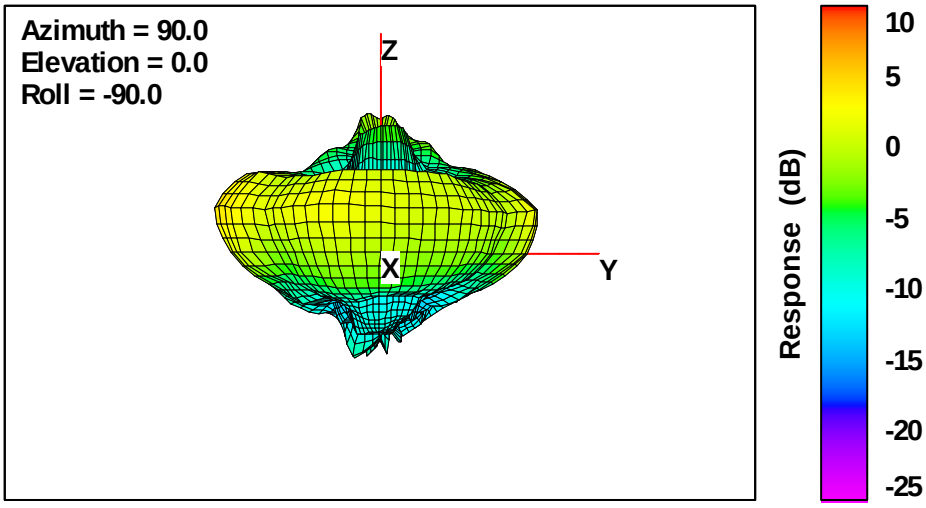

5625MHz

Total

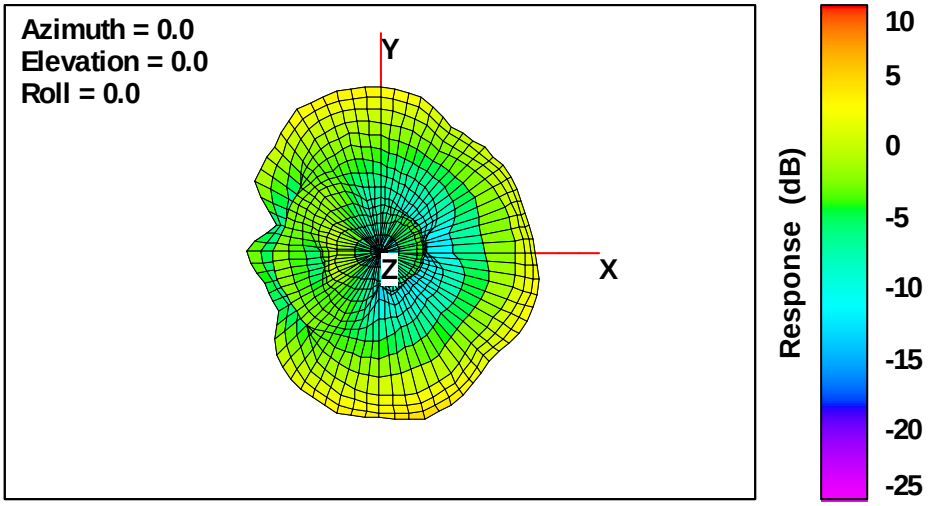

Total

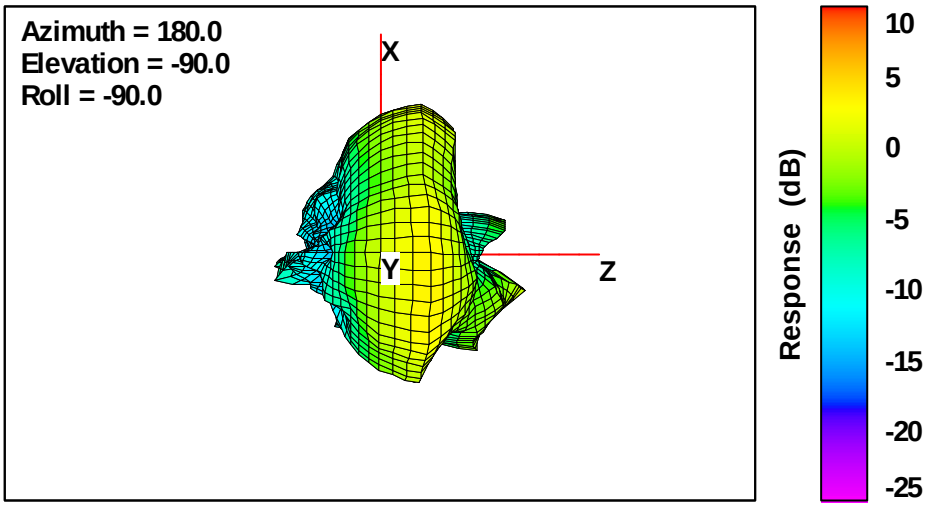

Total

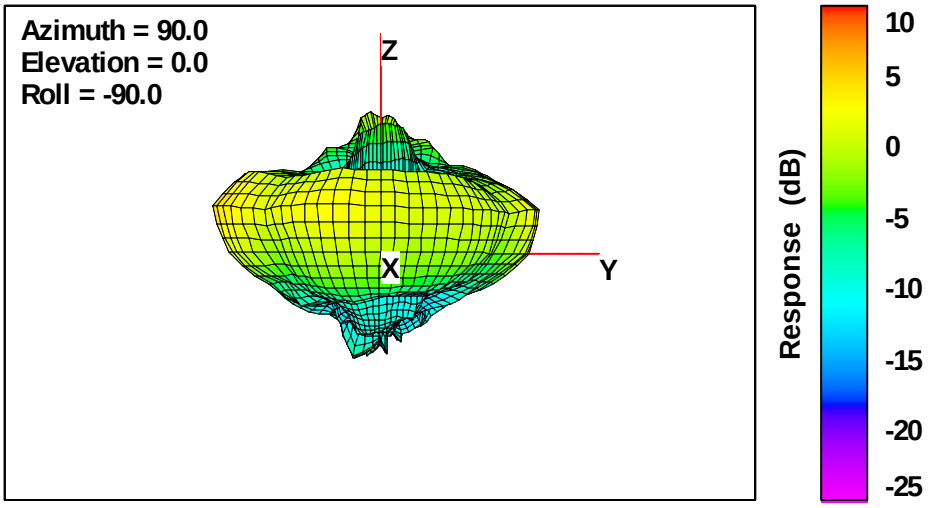

5650MHz

Total

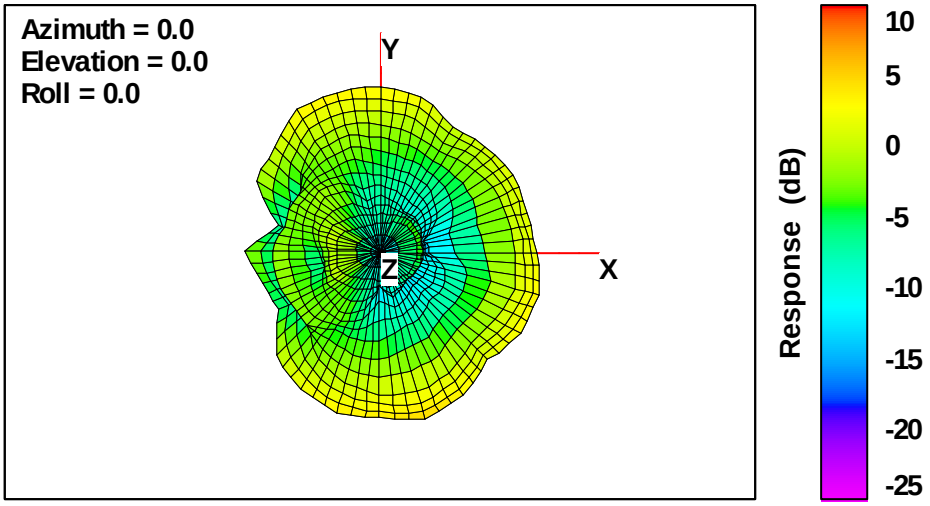

Total

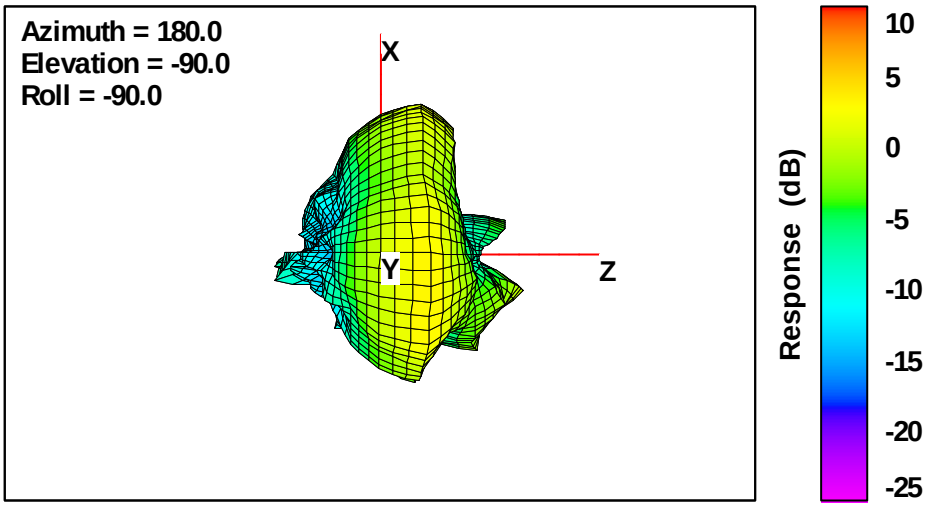

Total

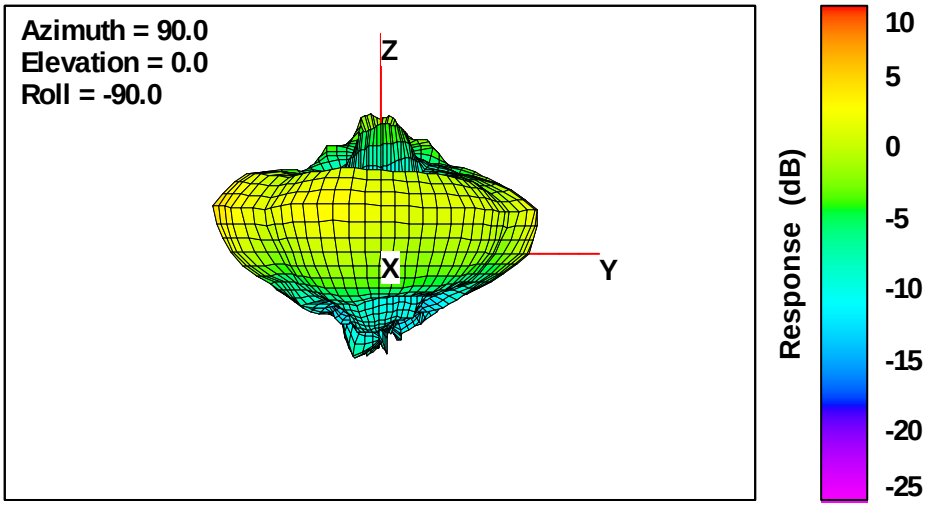

5675MHz

Total

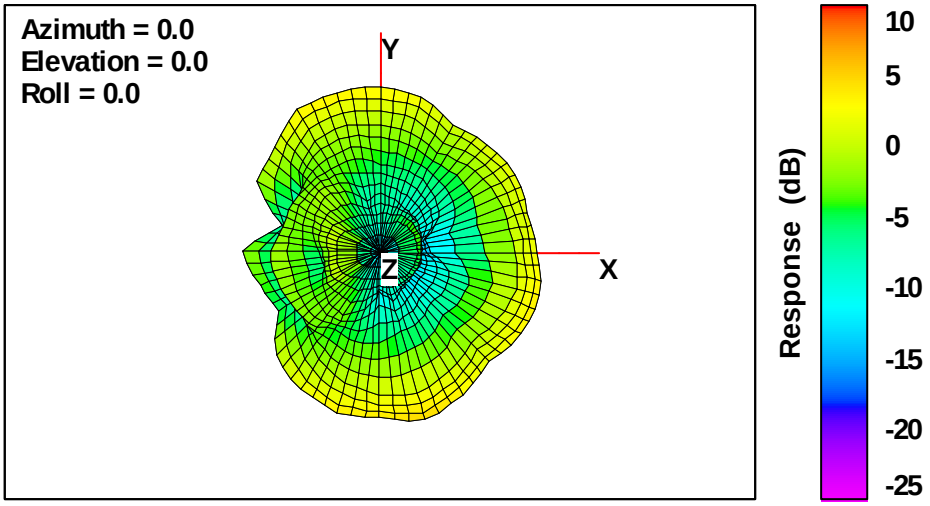

Total

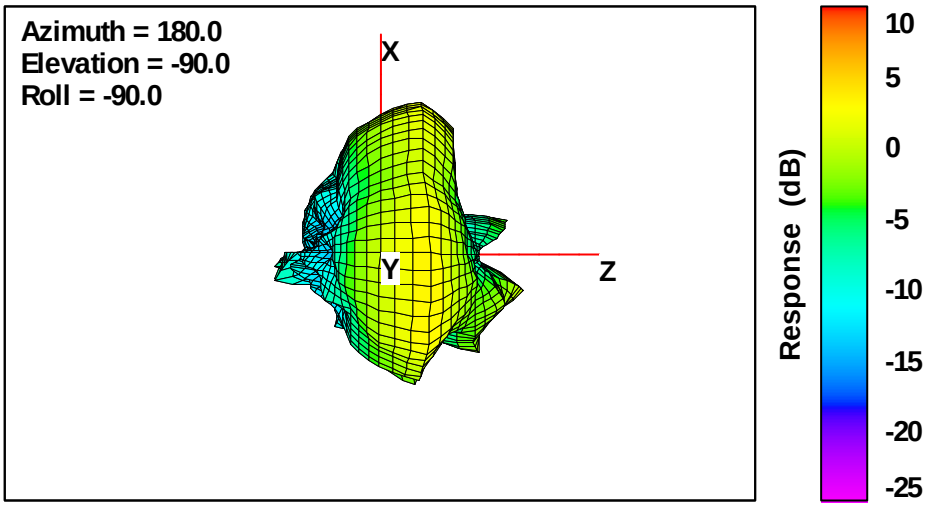

Total

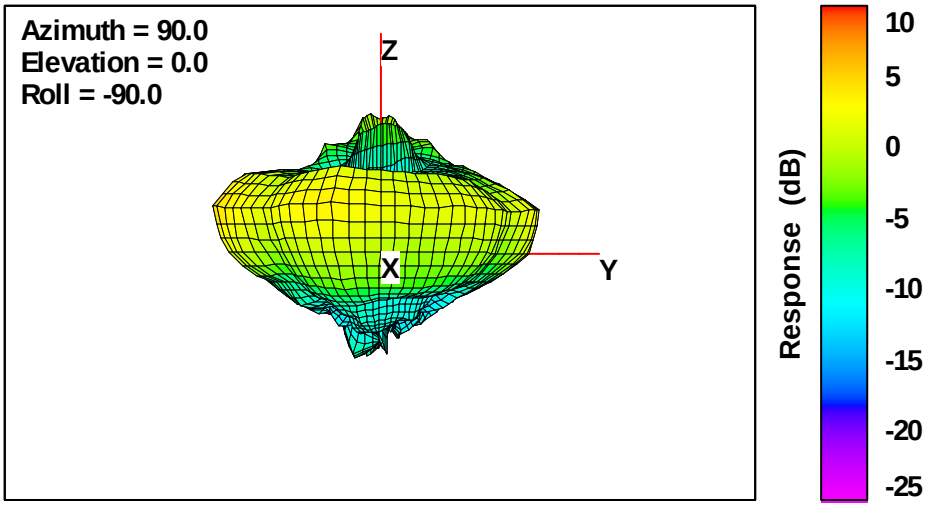

5700MHz

Total

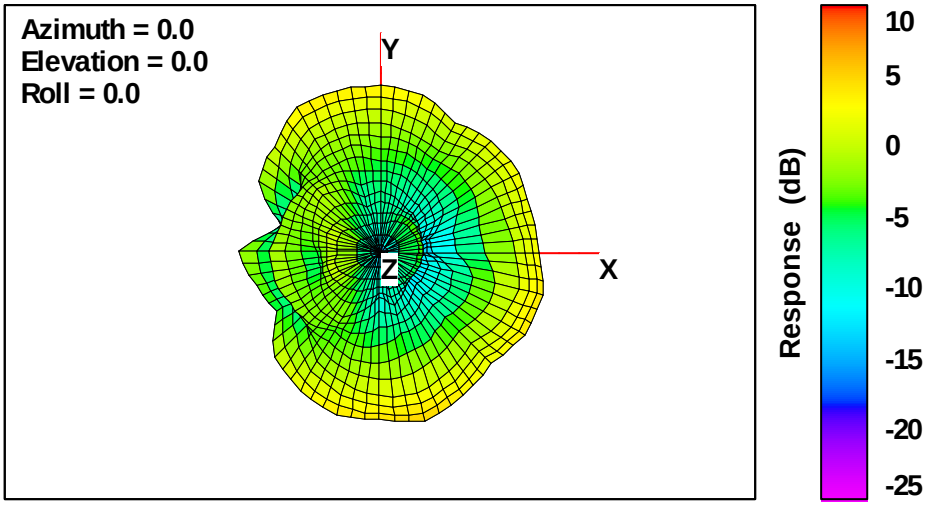

Total

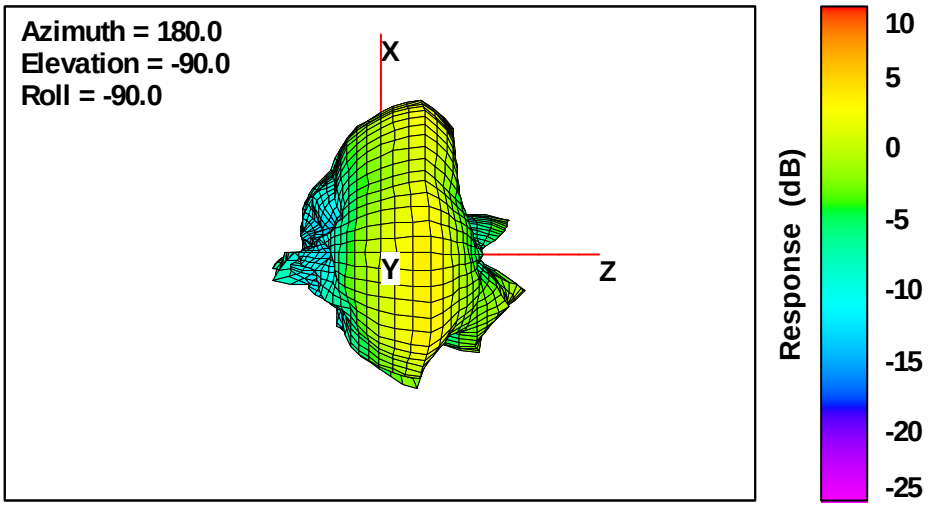

Total

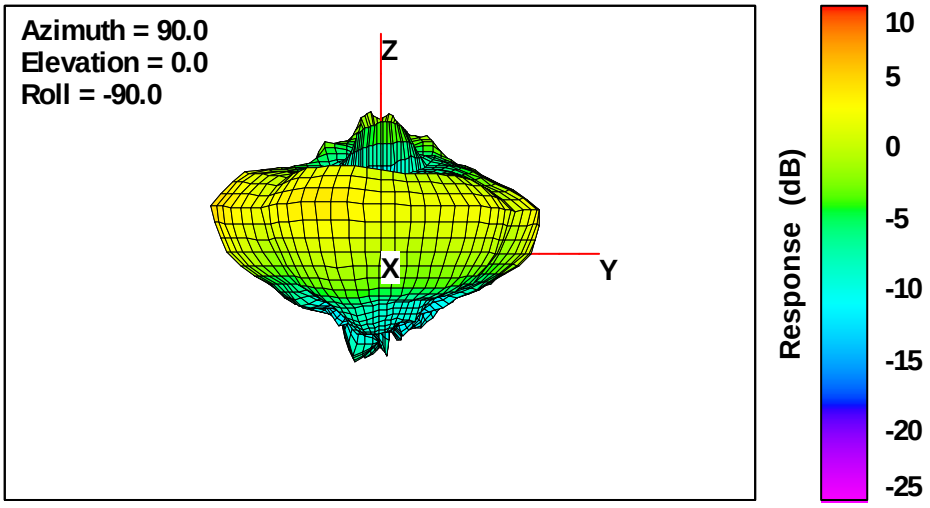

5725MHz

Total

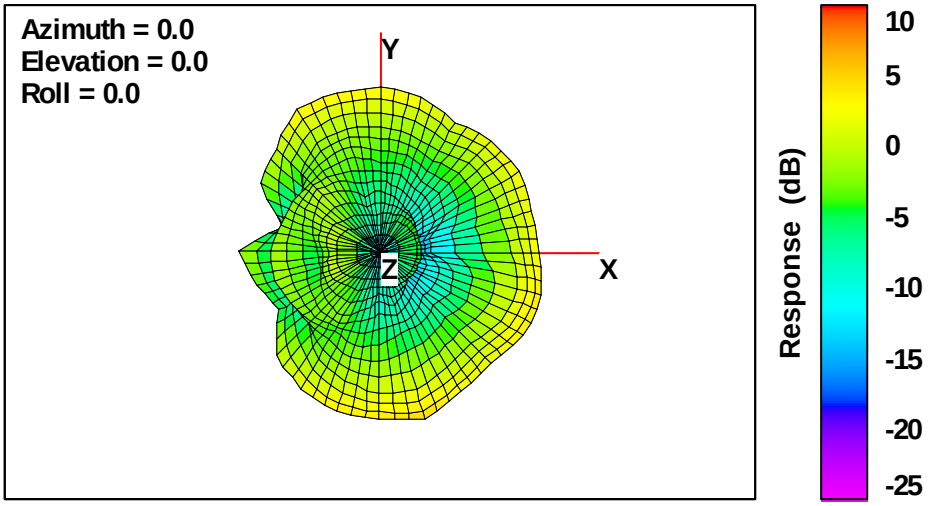

Total

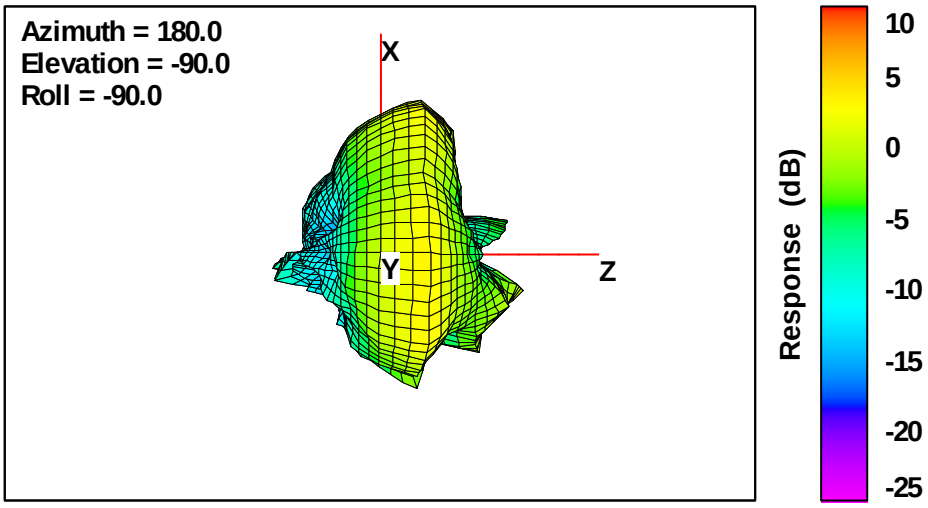

Total

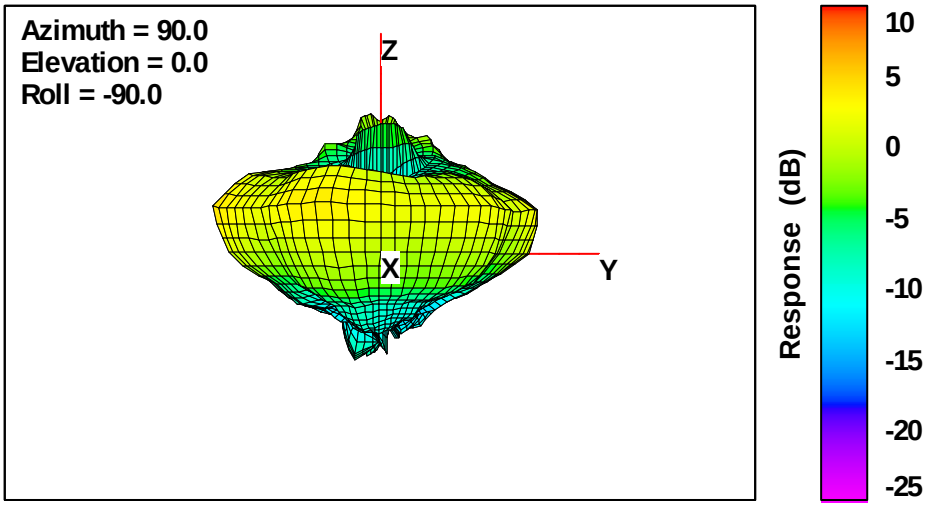

5750MHz

Total

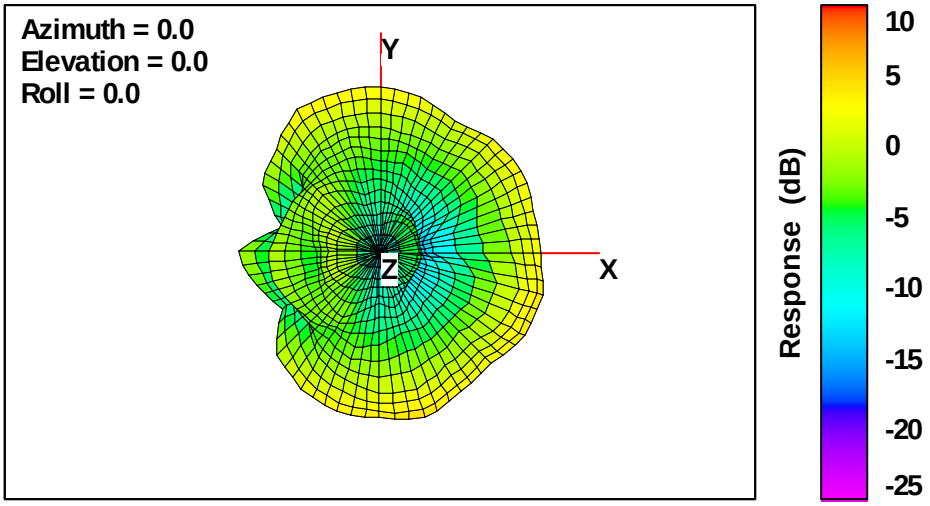

Total

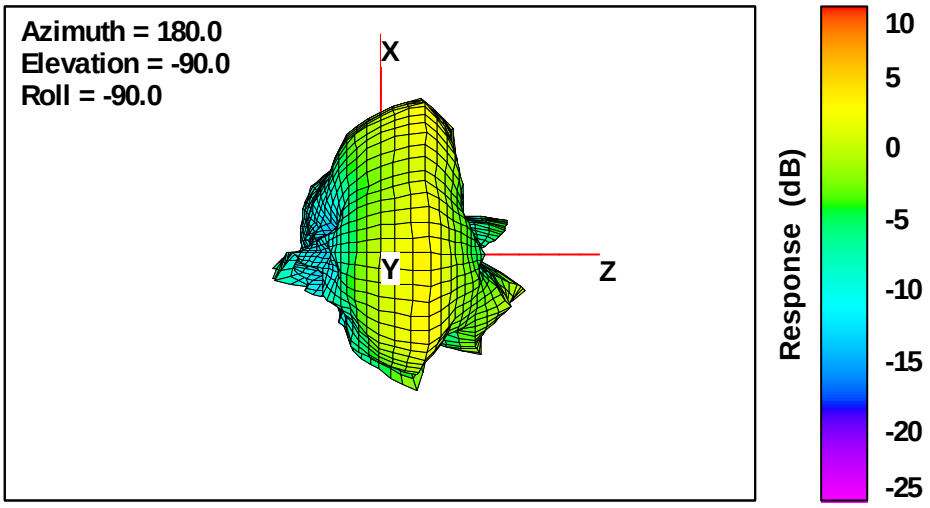

Total

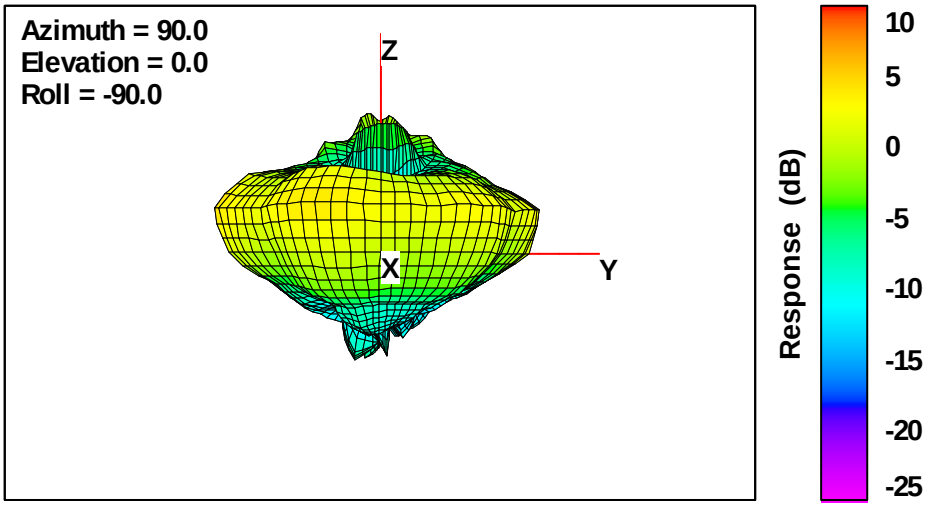

5775MHz

Total

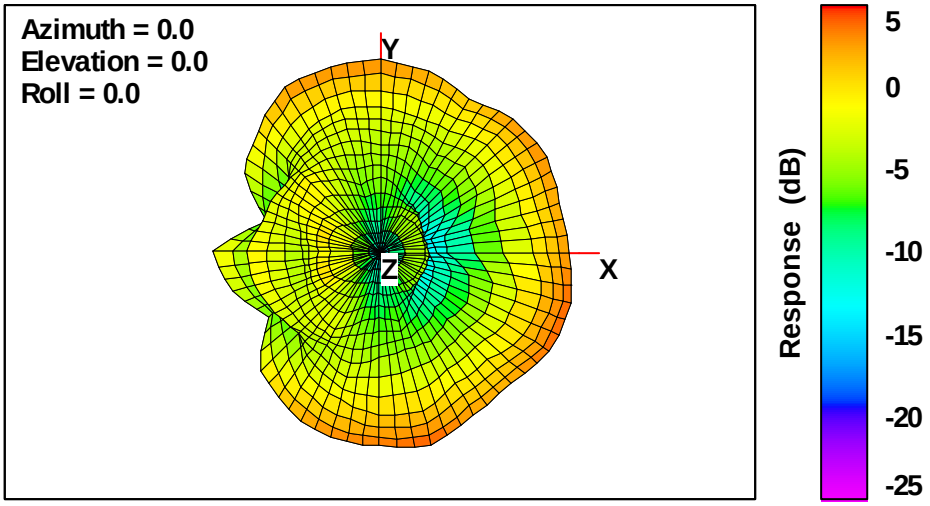

Total

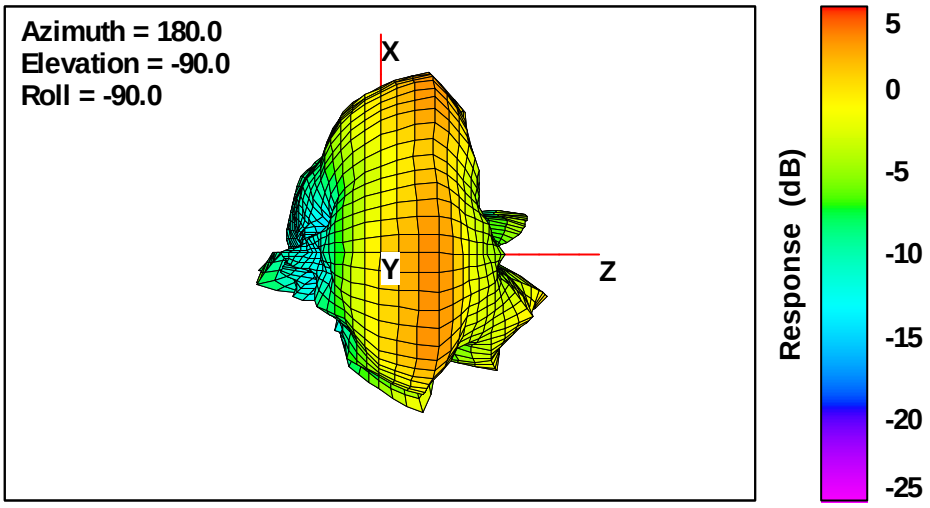

Total

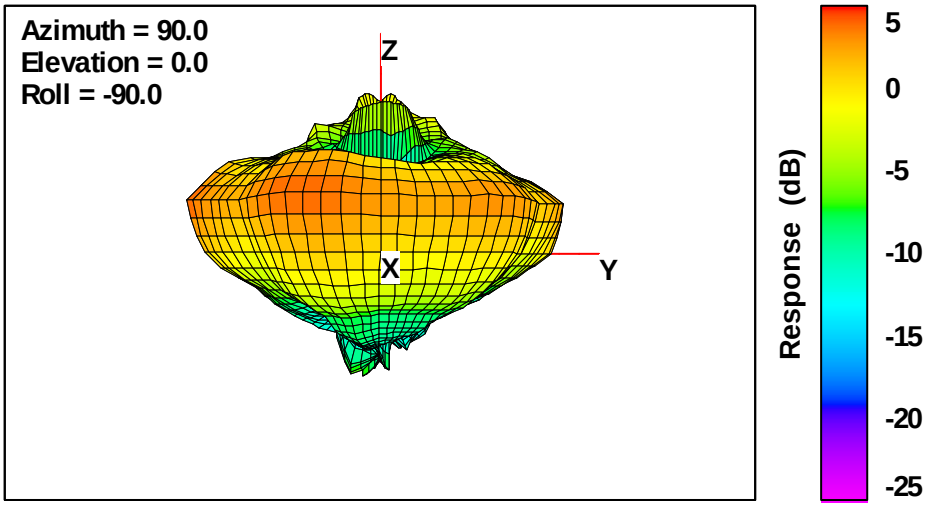

5800MHz

Total

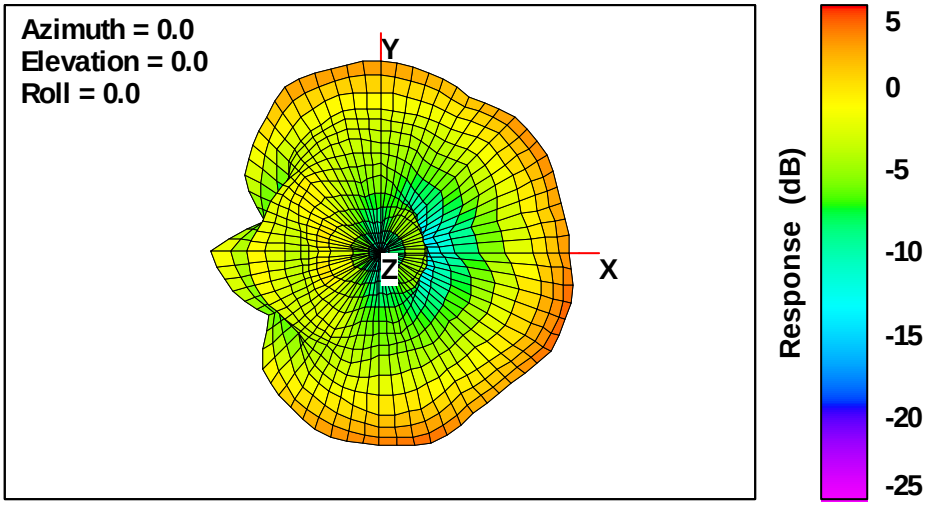

Total

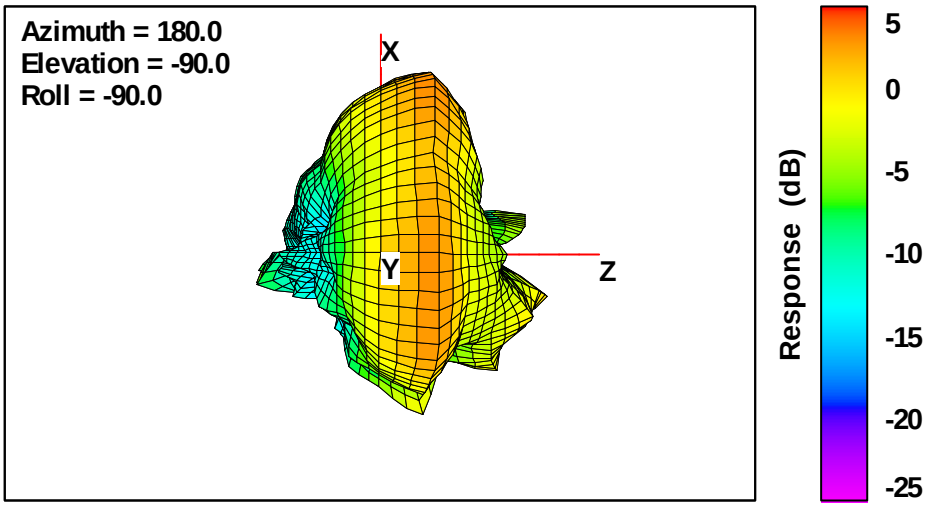

Total

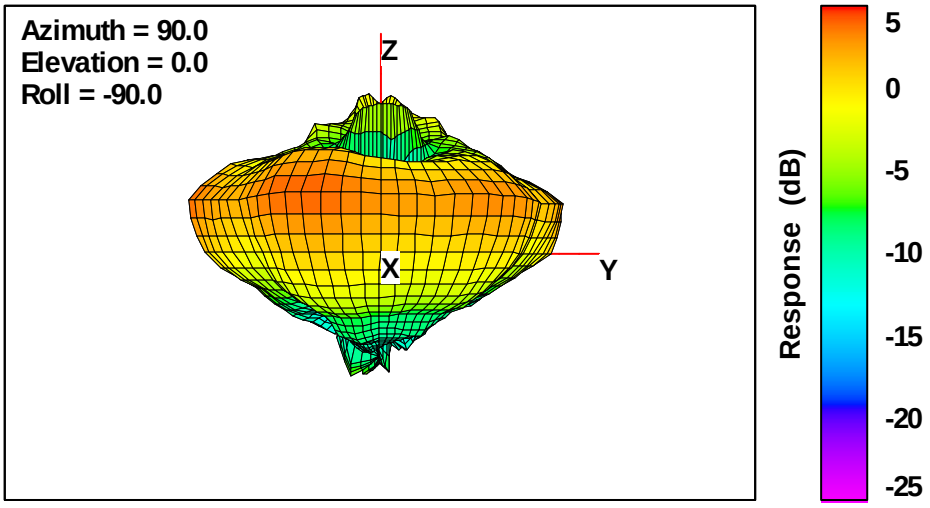

5825MHz

Total

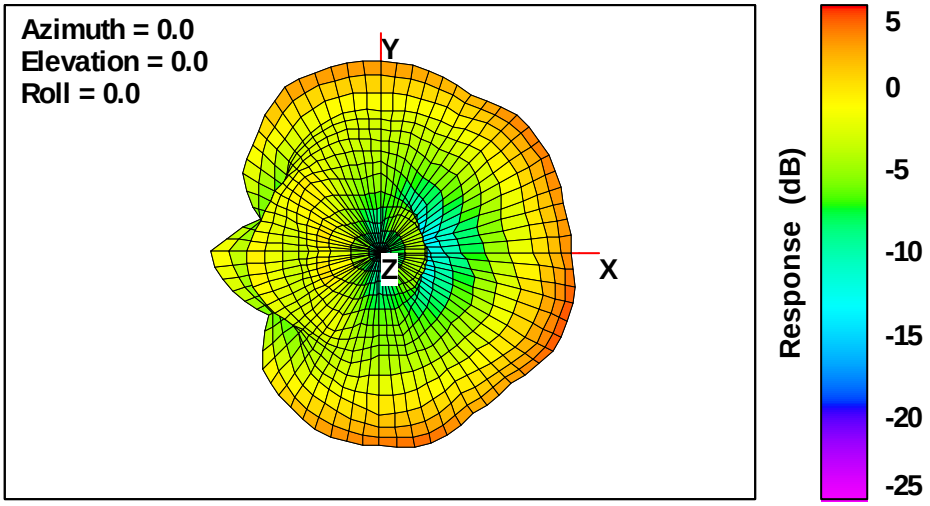

Total

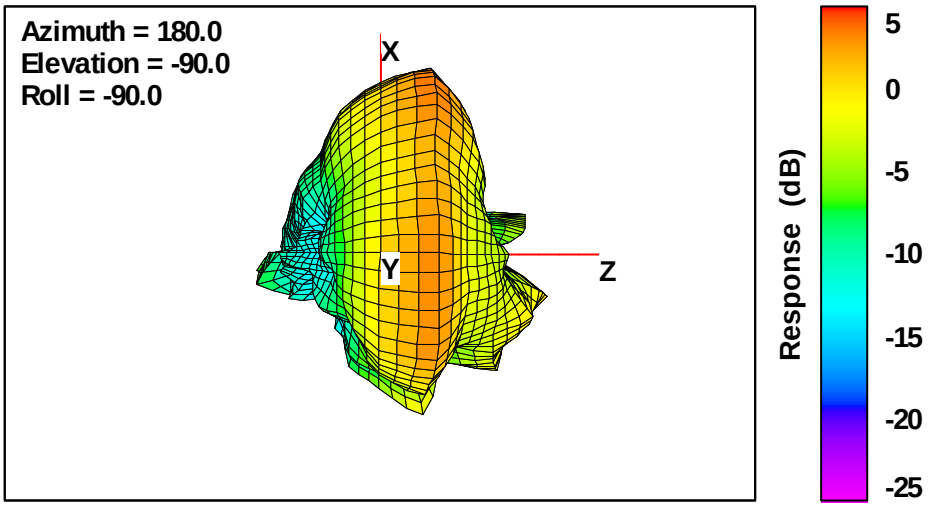

Total

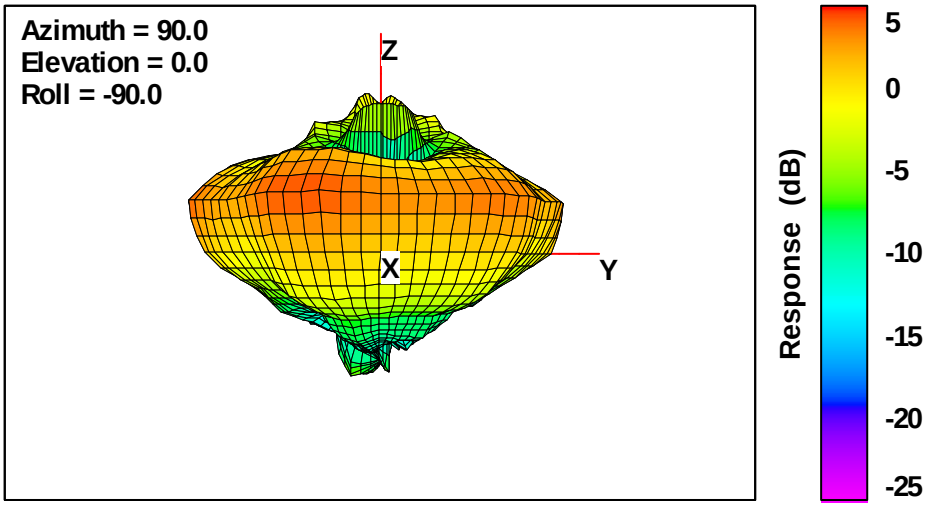

5850MHz

Total

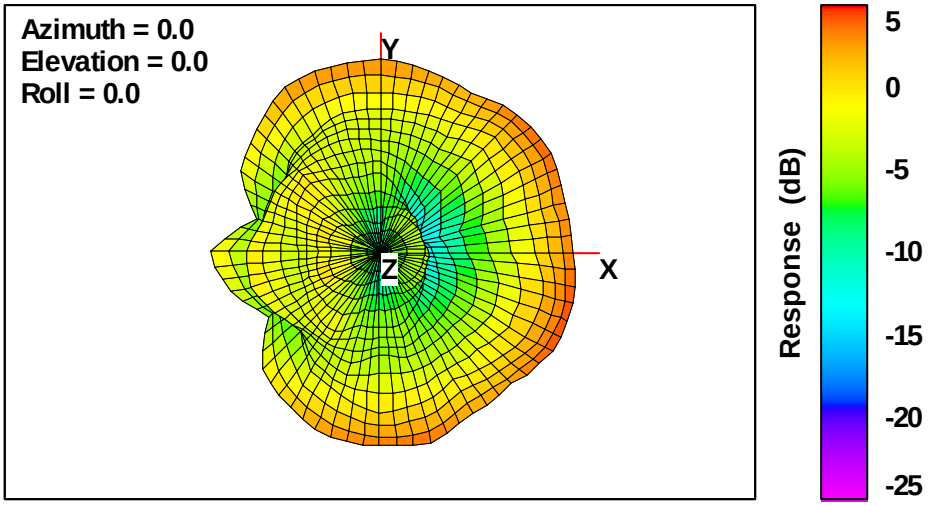

Total

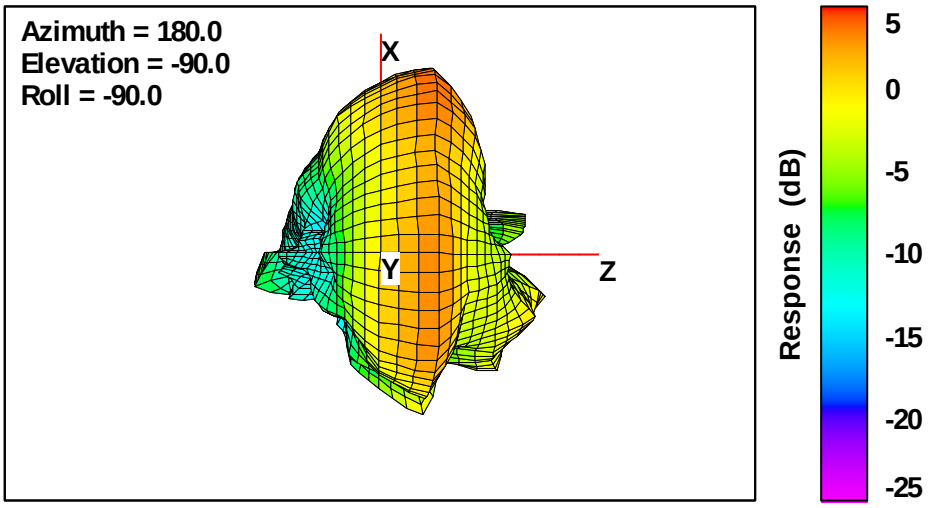

Total

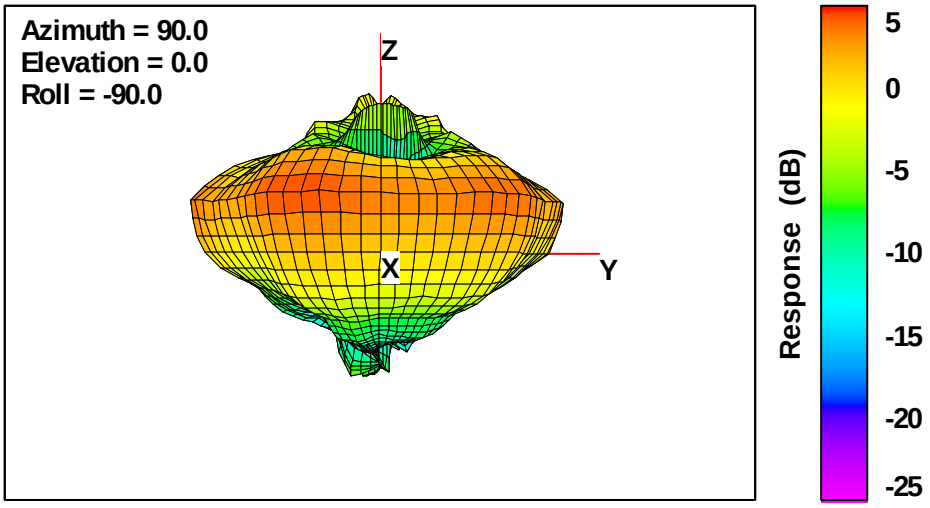

APPENDIX. EUT photographs

Please refer to another document – “ORBDUM-WTW-P23020799_CRADLEPOINT_CP01_Antenna measurement summary_Appendix” Test Setup and EUT photographs.