AP-7522 Access Point
INSTALLATION GUIDE

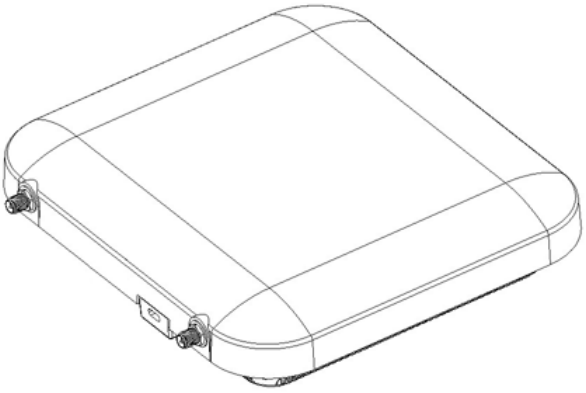

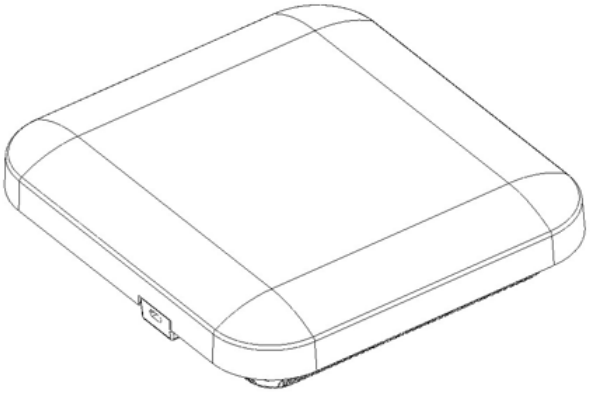

MN000879A01B.fm Page 2 Thursday, July 10, 2014 11:01 AM

MOTOROLA SOLUTIONS and the Stylized M Logo are registered in the US Patent & Trademark Office. © Motorola Solutions, Inc. 2014. All rights reserved.

MN000879A01B.fm Page 3 Thursday, July 10, 2014 11:01 AM

1.0 Introduction 5
1.1 Document Conventions 5
1.2 Warnings 6
1.3 Site Preparation 6
1.4 AP-7522 Package Contents 6
1.4.1 Features 6
1.5 AP-7522 Antennas 7
2.0 Hardware Installation 8
2.1 Installation Instructions 8
2.2 Precautions 8
2.3 Access Point Placement 9
2.4 Power Injector System 9
2.5 Wall Mount Instructions 11
2.5.1 Wall Mount Procedure - New Installation 12
2.5.2 Wall Mount Procedure - Existing Access Point Replacement . . 13
2.6 Suspended Ceiling T-Bar Mount Installation 14
2.7 LED Indicators 17
3.0 Basic Access Point Configuration 19
4.0 AP-7522 Access Point Specifications 30
4.1 Electrical Characteristics 30
4.2 Physical Characteristics 30
4.3 Radio Characteristics 31
5.0 Regulatory Information 32
5.1 Regulatory Information 32
5.2 Wireless Device Country Approvals 32
5.2.1 Country Selection 33
5.2.2 Frequency of Operation - FCC and IC 33
5.3 Health and Safety Recommendations 34
5.3.1 Warnings for the use of Wireless Devices 35

MN000879A01B.fm Page 4 Thursday, July 10, 2014 11:01 AM

5.3.2 Potentially Hazardous Atmospheres - Fixed Installations 35
5.3.3 Safety in Hospitals 35
5.4 RF Exposure Guidelines 36
5.4.1 Safety Information 36
5.4.2 International 36
5.4.3 EU 36
5.4.4 US and Canada 36
5.5 Power Supply 37
5.6 Radio Frequency Interference Requirements - FCC 37
5.6.1 Radio Transmitters - Part 15 37
5.6.2 Radio Frequency Interference Requirements - Canada 37
5.7 CE Marking and European Economic Area (EEA) 38
5.8 Statement of Compliance 39
5.9 Japan (VCCI) - Voluntary Control Council for Interference 39
5.10 Korea Warning Statement for Class B ITE 39
5.11 Other Countries 39
5.12 Waste Electrical and Electronic Equipment (WEEE) 41
5.13 Turkish WEEE Statement of Compliance 42
6.0 Motorola Solutions Support Center 43
7.0 AP-7522 Access Point China ROHS Compliance 44

MN000879A01B.fm Page 5 Thursday, July 10, 2014 11:01 AM

1 Introduction

The AP-7522 external antenna and internal antenna Access Point's are mid-tier Access Point's with a relatively small footprint which supports functionality for dependable and efficient network performance.The AP-7522 is a 2x2:2 802.11ac Access Point utilizing one 2.4 GHz 802.11n radio and one 5 GHz 802.11ac radio. The Access Point housing is Plenum-rated (UL2043).

The Access Point's unique WiNG 5 software enables the Access Point to function as either a *Standalone* Access Point, an *Adaptive* Access Point, or a *Virtual Controller*.

If new to Motorola Solutions Access Point technology, refer to the *WiNG Access Point System Reference Guide* to familiarize yourself with Access Point technology and the feature set supported by the WiNG operating system. The guide is available at *https://portal.motorolasolutions.com/Support/US-EN/Wireless+Networks*.

This document is written for the qualified network device installer.

1.1 Document Conventions

The following graphical alerts are used in this document to indicate notable situations:

NOTE	Tips, hints, or special requirements that you should take note of.
CAUTION	Care is required. Disregarding a caution can result in data loss or equipment malfunction.
WARNING!	Indicates a condition or procedure that could result in personal injury or equipment damage.

1.2 Warnings

- Read all installation instructions and site survey reports, and verify correct equipment installation before connecting the AP-7522 Access Point.
- Remove jewelry and watches before installing this equipment.
- Verify any device connected to this unit is properly wired and grounded.
- Verify there is adequate ventilation around the device, and that ambient temperatures meet equipment operation specifications.

1.3 Site Preparation

- Consult your site survey and network analysis reports to determine specific equipment placement, power drops, and so on.
- Assign installation responsibility to the appropriate personnel.
- Identify and document where all installed components are located.
- Ensure adequate, dust-free ventilation to all installed equipment.
- Identify and prepare Ethernet and console port connections.
- Verify cable lengths are within the maximum allowable distances for optimal signal transmission.

1.4 AP-7522 Package Contents

An AP-7522 Access Point is available in external antenna (AP-7522) and internal antenna (AP-7522I) configurations. An AP-7522 ships with the following:

- AP-7522 Access Point
- AP-7522 Installation Guide *(This Guide)*
- Wall mount screws and mounting bracket

1.4.1 Features

An AP-7522 Access Point supports the following feature set:

- Two RJ-45 connectors (GE1/POE and Console)
- Two LED indicators
- One 2.4 GHz 802.11n radio and one 5 GHz 802.11ac radio
- 2x2 MIMO, 2 spatial streams

The GE1/POE accepts 802.3at or 802.3af compliant power from an external source**.**

NOTE When operating in a Gigabit Ethernet environment, CAT-5e or CAT-6 cable is recommended for Gigabit operation.

1.5 AP-7522 Antennas

An AP-7522 external antenna Access Point supports the following dual band antenna options:

Part Number	***Antenna Type***	***2.4 GHZ Gain (dBi)***	***5 GHZ Gain (dBi)***	***Impdance (Ohms)***
ML-2452-APA2-01	Dipole	3.17	4.6	50
ML-2452-HPA5-036	Dipole	3	5	50
ML-2452-APAG2A1-01	Dipole	2.7	1.7	50
ML-2452-PNA5-01R	Panel	5.5	6	50

An AP-7522 internal antenna Access Point supports the following dual band antenna:

Part Number	***Antenna Type***	***2.4 GHZ Gain (dBi)***	***5 GHZ Gain (dBi)***	***Impedance (Ohms)***
BIRCH-INT-ANT	Monopole	4.13	5.92	N/A

MN000879A01B.fm Page 8 Thursday, July 10, 2014 11:01 AM

2 Hardware Installation

2.1 Installation Instructions

An AP-7522 Access Point mounts either on a wall (with *M 3.5 x 0.6 x 23 MM* pan head screws and mounting bracket- or equivalent) or on a suspended ceiling T-bar.

To prepare for the installation:

1. Match the part number on the purchase order with the part numbers in the packing list and on the case of the Access Point.
2. Verify the contents of the box include the intended AP-7522 Access Point, and the included hardware matches the package contents (see *AP-7522 Package Contents on page 6*).

Part Number	Description
AP-7522-67040-US	AP-7522 dual radio 802.11ac 2x2:2 MIMO Access Point external antenna US version
AP-7522-67040-WR	AP-7522 dual radio 802.11ac 2x2:2 MIMO Access Point external antenna International version
AP-7522-67040-EU	AP-7522 dual radio 802.11ac 2x2:2 MIMO Access Point external antenna EU version
AP-7522-67030-US	AP-7522 dual radio 802.11ac 2x2:2 MIMO Access Point internal antenna US version
AP-7522-67030-WR	AP-7522 dual radio 802.11ac 2x2:2 MIMO Access Point internal antenna International version
AP-7522-67030-EU	AP-7522 dual radio 802.11ac 2x2:2 MIMO Access Point internal antenna EU version

3. Review site survey and network analysis reports to determine the location and mounting position for the AP-7522 Access Point.
4. Connect a CAT-5 or better Ethernet cable to a compatible 802.3at or 802.3af power source and run the cable to the installation site. Ensure there is sufficient slack on the cable to perform the installation steps.

NOTE When operating in a Gigabit Ethernet environment, CAT-5e or CAT-6 cable is recommended for Gigabit operation.

2.2 Precautions

Before installing an AP-7522 Access Point, verify the following:

- Your are using the correctly rated power solution for the AP-7522 (either the AP-PSBIAS-2P3-ATR power injector or the PWRS-14000-54R external power supply)
- Motorola Solutions recommends you do not to install the AP-7522 in wet or dusty areas.
- Verify the environment has a continuous temperature range between -4° F to 104° F/-20° C to 40° C for external antenna Access Points and 32° F to 104° F/0° C to 40° C for internal antenna Access Points.

MN000879A01B.fm Page 9 Thursday, July 10, 2014 11:01 AM

2.3 Access Point Placement

For optimal performance, install the Access Point away from transformers, heavy-duty motors, fluorescent lights, microwave ovens, refrigerators and other industrial equipment. Signal loss can occur when metal, concrete, walls or floors block transmission. Install the Access Point in an open area or add Access Points as needed to improve coverage.

Antenna coverage is analogous to lighting. Users might find an area lit from far away to be not bright enough. An area lit sharply might minimize coverage and create *dark areas.* Uniform antenna placement in an area (like even placement of a light bulb) provides even, efficient coverage.

Install the Access Point at an ideal height of 10 feet from the ground.

To maximize the Access Point's radio coverage area, Motorola Solutions recommends conducting a site survey to define and document radio interference obstacles before installing the Access Point.

2.4 Power Injector System

An AP-7522 Access Point can receive power via an Ethernet cable connected to the GE1/POE (LAN) port.

When users purchase a WLAN solution, they often need to place Access Points in obscure locations. In the past, a dedicated power source was required for each Access Point in addition to the Ethernet infrastructure. This often required an electrical contractor to install power drops at each Access Point location. The Power Injector merges power and Ethernet into one cable, reducing the burden of installation and allowing optimal Access Point placement in respect to the intended coverage area.

CAUTION Using a non-compliant injector, or an injector supporting legacy modes will not allow the AP-7522 to function at optimum performance levels.

CAUTION Do not plug the AP-PSBIAS-2P3-ATR Power Injector into the Access Point's Console port. Connecting the Power Injector into the console port can damage the port and void the AP-7522's product warranty.

The AP-7522's supported Power Injector (Part No. AP-PSBIAS-2P3-ATR) is a high power POE Injector delivering up to 30 watts. The Access Point can only use a Power Injector when connecting the unit to the Access Point's GE1/POE port. The Power Injector is separately ordered and not shipped with an existing AP SKU.

MN000879A01B.fm Page 10 Thursday, July 10, 2014 11:01 AM

The Motorola Access Point Power Supply (Part No. PWRS-14000-54R) is not included with the Access Point and is orderable separately as an accessory. If the Access Point is provided both POE power and PWRS-14000-54R power concurrently, the Access Point will source power from the PWRS-14000-54R supply only. Disconnecting the AC power from the PWRS-14000-54R causes the Access Point to re-boot before sourcing power from the POE power injector. If the AP is operating using injector supplied power, the AP will not automatically reboot if an AC adapter is connected. The Access Point continues to operate with power supplied from the AC adapter without change to the Access Point operating configuration. If using AC adapter supplied power and a change to the AP's operating configuration is warranted, the Access Point needs to be manually rebooted by the customer.

CAUTION The Access Point supports any standards-based compliant power source (including non-Motorola Solutions power sources). However, using the wrong solution (including a POE system used on a legacy Motorola Solutions Access Point) could either limit functionality or severely damage the Access Point and void the product warranty.

A separate Power Injector is required for each AP-7522 Access Point comprising the network.

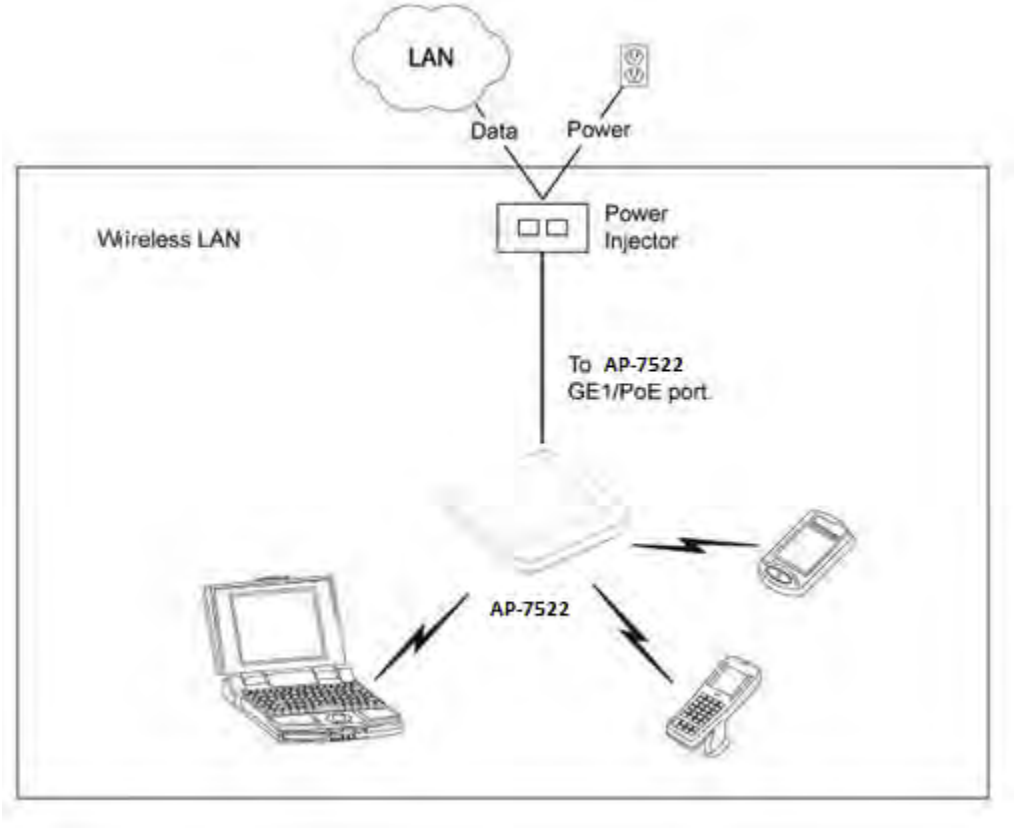

MN000879A01B.fm Page 11 Thursday, July 10, 2014 11:01 AM

The Power Injector can be installed free standing, on an even horizontal surface or wall mounted using the power injector's wall mounting key holes. The following guidelines should be adhered to before cabling the Power Injector to an Ethernet source and an Access Point:

- Do not block or cover airflow to the Power Injector.
- Keep the Power Injector away from excessive heat, humidity, vibration and dust.
- The Power Injector isn't a repeater, and does not amplify the Ethernet signal. For optimal performance, ensure the Power Injector is placed as close as possible to the data port.

CAUTION To avoid problematic performance and restarts, disable POE from a wired switch port connected to an Access Point if mid-span *power sourcing equipment* (PSE) is used between the two, regardless of the manufacturer of the switch.

CAUTION Ensure AC power is supplied to the Power Injector using an AC cable with an appropriate ground connection approved for the country of operation.

To install the Power Injector to an Ethernet data source and an Access Point:

1. Connect the Power Injector to an AC outlet (110VAC to 220VAC).
2. Connect an RJ-45 Ethernet cable between the Power Injector **Data & Power Out** connector and the Access Point's GE1/POE port.
3. Connect an RJ-45 Ethernet cable between the network data supply (host) and the Power Injector **Data In** connector.

   Ensure the cable length from the Ethernet source (host) to the Power Injector and Access Point does not exceed 100 meters (333 ft).

   The Power Injector has no On/Off power switch. The Injector receives power and is ready for device connection and operation as soon as AC power is applied. Refer to the *Installation Guide* shipped with the Power Injector for a description of the device's LEDs.

2.5 Wall Mount Instructions

A wall mount deployment requires hanging the AP-7522 Access Point with the provided mounting bracket and two screws. The AP-7522 can be mounted on to any plaster, wood or cement wall surface using the provided mounting bracket.

The hardware required to install the AP-7522 on a wall consists of:

- Two wide-shoulder Phillips pan head self-tapping screws (M3.5 x 0.6 x 23 mm)
- Mounting bracket

Optional customer provided installation tools include:

- Phillips head screw driver, or drill and drill bit

MN000879A01B.fm Page 12 Thursday, July 10, 2014 11:01 AM

2.5.1 Wall Mount Procedure - New Installation

This section describes a new AP-7522 installation with no previous Access Point existing on the intended wall surface.

1. Place the mounting bracket against the wall.
2. Mark the screw hole locations depending on the intended deployment orientation of the unit.

NOTE When pre-drilling a hole the recommended hole size is 4mm (0.16in.).

3. At each point, drill a hole in the wall and attach the mounting bracket.

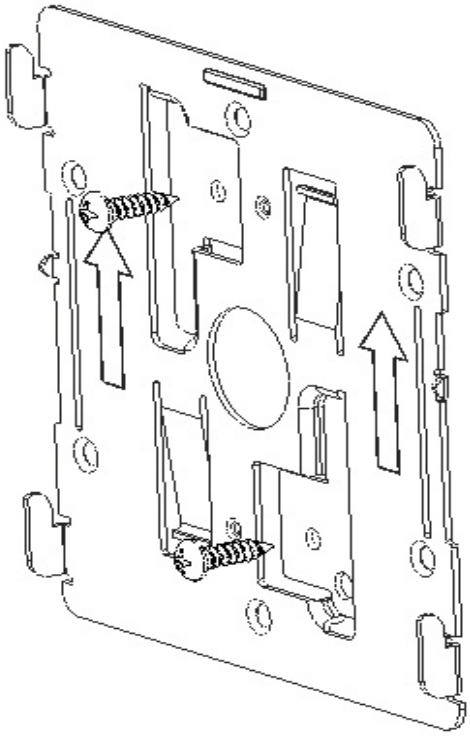

4. Place the Access Point on the mounting bracket.
5. Cable the Access Point using either the Power Injector solution (AP-PSBIAS-2P3-ATR) or the approved AP-7522 power supply (PWRS-14000-54R).

For Motorola Power Injector installations:

a. Connect a RJ-45 CAT5e (or CAT6) Ethernet cable between the Power Injector **Data & Power Out** connector and the Access Point's GE1/POE port.

b. Connect a RJ-45 CAT5e (or CAT6) Ethernet cable between the network data supply (host) and the Power Injector **Data In** connector.

c. Ensure the cable length from the Ethernet source (host) to the Power Injector and Access Point does not exceed 100 meters (333 ft). The Power Injector has no On/Off power switch. The Power Injector receives power as soon as AC power is applied.

For standard power adapter (non Power Injector) and line cord installations:

a. Connect a RJ-45 Ethernet cable between the network data supply (host) and the Access Point's GE1/POE port.

b. Verify the power adapter is correctly rated according to the country of operation.

c. Connect the power supply line cord to the power adapter.

d. Attach the power adapter cable into the power connector on the Access Point.

e. Attach the power supply line cord to a power supply.

6. Verify the Access Point is receiving power by observing the LEDs are lit or flashing. For more information on AP-7522 LED behavior, see *LED Indicators on page 17*.

7. The Access Point is ready to configure.

CAUTION If not using an AP-PSBIAS-2P3-ATR power injector, ensure only the AP-7522's designated power supply (PWRS-14000-54R) is used to supply power to the Access Point. Using an incorrectly rated power supply could damage the Access Point and void the product warranty. Do not actually connect to the power source until the cabling portion of the installation is complete.

2.5.2 Wall Mount Procedure - Existing Access Point Replacement

An existing AP-7131 or AP-7131N Series Access Point installed on a wall can be replaced by an AP-7522. Simply remove the existing AP-7131 or AP-7131N and install the new provided mounting bracket for AP-7522 directly to the wall. The cabling procedure for such a replacement is as described in the previous section.

MN000879A01B.fm Page 14 Thursday, July 10, 2014 11:01 AM

2.6 Suspended Ceiling T-Bar Mount Instructions

Ceiling mount requires holding the AP-7522 up against a T-bar of a suspended ceiling grid and twisting the unit on to the T-bar. If deploying the AP-7522 on a sculpted ceiling T-Bar, the Access Point mounting kit (Part No. KT-135628-01) can optionally be used as well.

1. First install the mounting bracket on the T-bar then attach the mounting plate using the mounting slots on the Access Point.

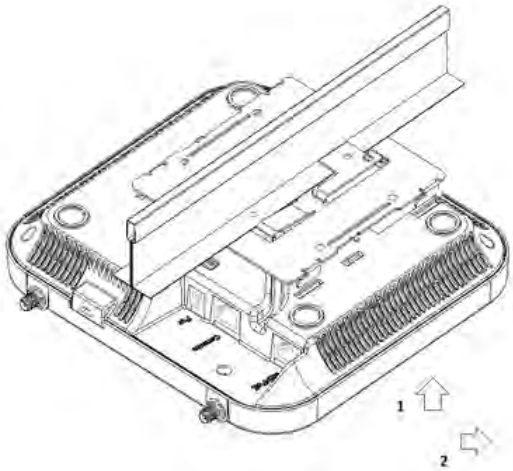

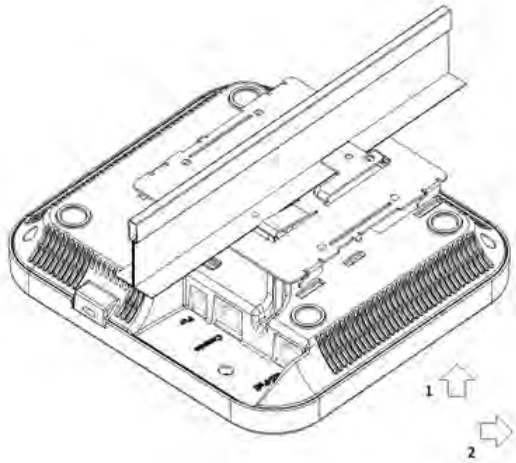

2. Cable the Access Point using either the Power Injector solution (AP-PSBIAS-2P3-ATR) or the approved AP-7522 power supply (PWRS-14000-54R).

   For Motorola Power Injector installations:

MN000879A01B.fm Page 15 Thursday, July 10, 2014 11:01 AM

a. Connect a RJ-45 CAT5e (or CAT6) Ethernet cable between the network data supply (host) and the Power Injector **Data In** connector.

b. Connect a RJ-45 CAT5e (or CAT6) Ethernet cable between the Power Injector **Data & Power Out** connector and the Access Point's GE1/POE port.

c. Ensure the cable length from the Ethernet source (host) to the Power Injector and Access Point does not exceed 100 meters (333 ft). The Power Injector has no On/Off power switch. The Power Injector receives power as soon as AC power is applied.

For standard power adapter (non Power Injector) and line cord installations:

a. Connect a RJ-45 Ethernet cable between the network data supply (host) and the Access Point's GE1/POE port.

b. Verify the power adapter is correctly rated according the country of operation.

c. Connect the power supply line cord to the power adapter.

d. Attach the power adapter cable into the power connector on the Access Point.

e. Attach the power supply line cord to a power supply.

CAUTION If not using an AP-PSBIAS-2P3-ATR power injector, ensure only the AP-7522's designated power supply (PWRS-14000-54R) is used to supply power to the Access Point. Using an incorrectly rated power supply could damage the Access Point and void the product warranty. Do not actually connect to the power source until the cabling portion of the installation is complete.

3. Verify the unit has power by observing the LEDs. For more information on AP-7522 LED behavior, see *LED Indicators on page 17*.
4. Align the bottom of the ceiling T-bar with the back of the Access Point.
5. Orient the Access Point chassis by its length and the length of the ceiling T-bar.
6. Rotate the Access Point chassis 45 degrees clockwise.
7. Push the back of the Access Point chassis on to the bottom of the ceiling T-bar.

MN000879A01B.fm Page 16 Thursday, July 10, 2014 11:01 AM

8. Rotate the Access Point chassis 45 degrees counter-clockwise. The clips click as they fasten to the T-bar.

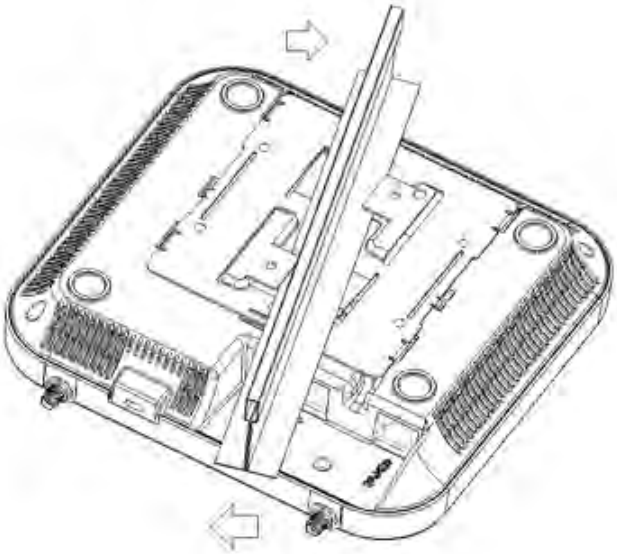

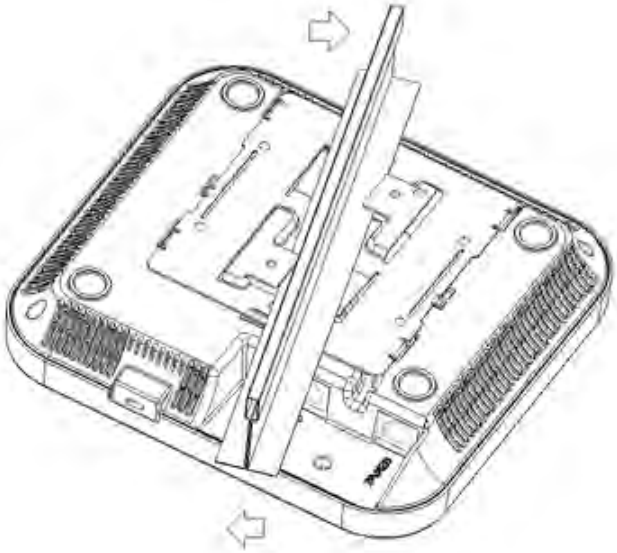

9. The Access Point is ready to configure.

MN000879A01B.fm Page 17 Thursday, July 10, 2014 11:01 AM

2.7 LED Indicators

The AP-7522 LED activity indicators are located on the front of the housing and are visible through the enclosure.

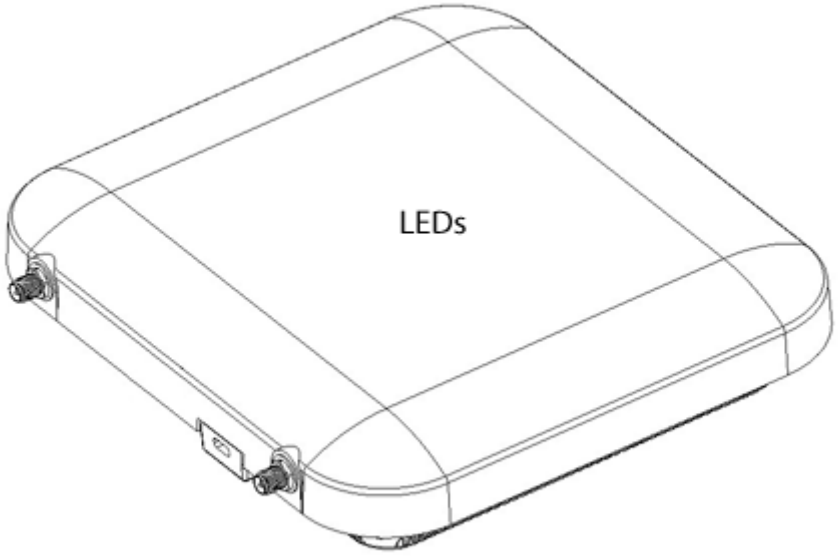

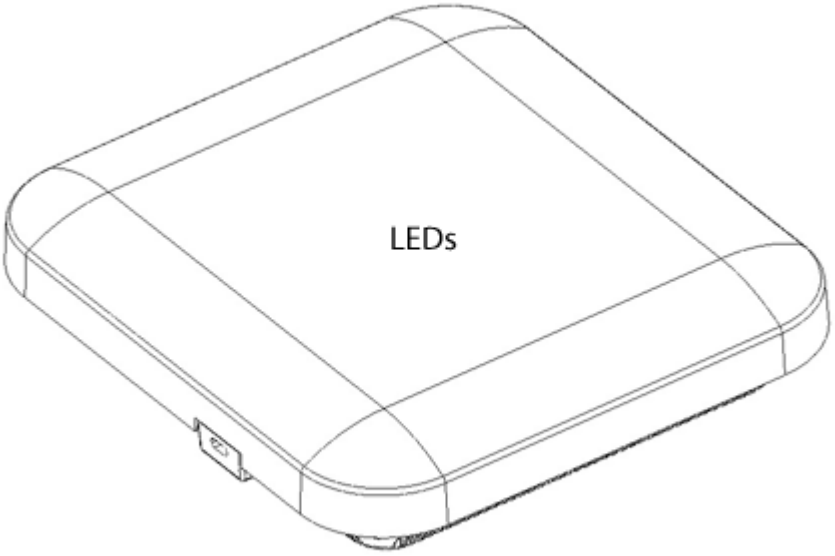

MN000879A01B.fm Page 18 Thursday, July 10, 2014 11:01 AM

The LEDs provide a status display indicating error conditions, transmission, and network activity for the 5 GHz 802.11ac (amber) radio and the 2.4 GHz 802.11n (green) radio.

Task	***5 GHz Activity LED* (Amber)**	***2.4 GHz Activity LED* (Green)**
Unconfigured Radio	On	On
Normal Operation	• If this radio band is enabled: Blink at 5 second interval • If this radio band is disabled: Off • If there is activity on this band: Blink interval at 1 time per second	• If this radio band is enabled: Blink at 5 second interval • If this radio band is disabled: Off • If there is activity on this band: Blink interval at 1 time per second
Firmware Update	On	Off
Locate AP Mode	LEDs blink in an alternating green, red and amber pattern using an irregular blink rate. This LED state in no way resembles normal operating conditions.	LEDs blink in an alternating green, red and amber pattern using an irregular blink rate. This LED state in no way resembles normal operating conditions

MN000879A01B.fm Page 19 Thursday, July 10, 2014 11:01 AM

3 Basic Access Point Configuration

Once the AP-7522 is installed and powered on, complete the following steps to get the Access Point up and running and access management functions:

1. The Access Point's IP address is optimally provided using DHCP. A zero config IP address can also be derived if DHCP resources are unavailable. Using zero config, the last two octets in the IP address are the decimal equivalent of the last two bytes in the Access Point's hardcoded MAC address.

   For example:

   MAC address - 00:C0:23:00:F0:0A
   Zero-config IP address - 169.254.240.10

   To derive the Access Point's IP address using its MAC address:

   a. Open the Windows calculator by selecting *Start > All Programs > Accessories > Calculator*. This menu path may vary slightly depending on your version of Windows.
   b. With the Calculator displayed, select *View > Scientific*. Select the **Hex** radio button.
   c. Enter a hex byte of the Access Point's MAC address. For example, F0.
   d. Select the **Dec** radio button. The calculator converts F0 into 240. Repeat this process for the last Access Point MAC address octet.

2. Point the Web browser to the Access Point's IP address. The following login screen displays:

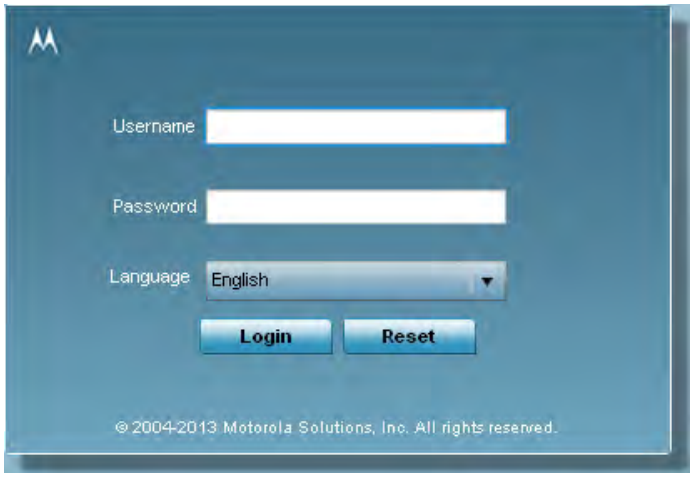

MN000879A01B.fm Page 20 Thursday, July 10, 2014 11:01 AM

3. Enter the default username *admin* in the **Username** field.
4. Enter the default password *motorola* in the **Password** field.
5. Click the **Login** button to load the management interface.

NOTE When logging in for the first time, you're prompted to change the password to enhance device security in subsequent logins.

NOTE If you get disconnected when running the wizard, you can connect again with the Access Point's actual IP address (once obtained) and resume the wizard.

6. If this is the first time the management interface has been accessed, the Initial Setup Wizard automatically displays.

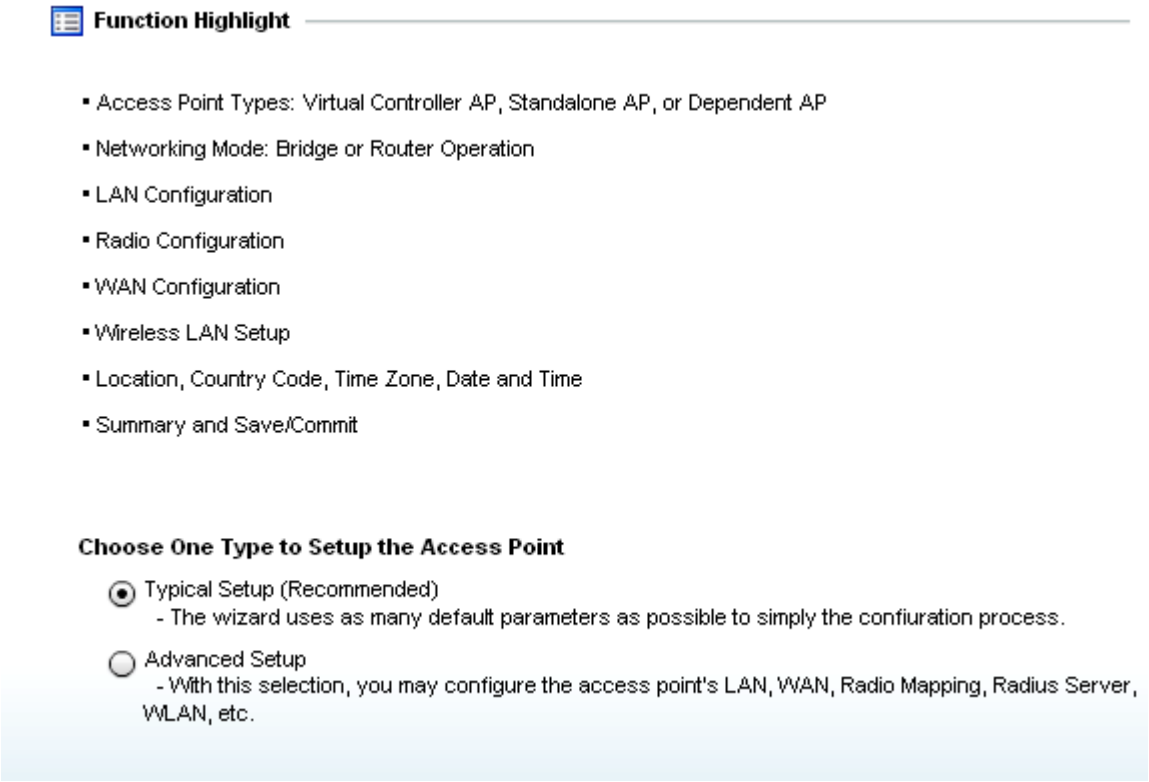

NOTE The Initial Setup Wizard displays the same pages and content for each Access Point type supported. The only difference being the number of radios configurable by Access Point type, as an AP7131 Access Point can support up to three radios, AP6522, AP6532, AP6562, AP8132 and AP7161 Access Points support two radios and AP6511 and AP6521 Access Points support a single radio.

The Introduction screen displays the various actions that can be performed using the wizard under the **Function Highlight** field.

Use the **Choose One type to Setup the Access Point** field options to select the type of wizard to run. The **Typical Setup** is the recommended wizard. This wizard uses the default parameters for most of the configuration parameters and sets up a working network with the least amount of manual configuration.

The **Advanced Setup** wizard is for administrators who prefer more control over the different configuration parameters. A few more configuration screens are available for customization when the Advanced Setup wizard is used.

The first page of the *Initial Setup Wizard* displays the **Navigation Panel** and **Function Highlights** for the configuration activities comprising the Access Point's initial setup. This page also displays options to select the typical or advanced mode for the wizard.

The Navigation Panel for the Typical Setup Wizard displays the basic configuration options.

A green checkmark to the left of an item in the **Navigation Panel** defines the task as having its minimum required configuration set correctly. A red X defines a task as still requiring at least one parameter be defined correctly.

7. Select **Save/Commit** within each page to save the updates made to that page's configuration. Select **Next** to proceed to the next page listed in the Navigation Panel without saving your updates.

NOTE While you can navigate to any page in the navigation panel, you cannot complete the Initial AP Setup Wizard until each task in the Navigation Panel has a green checkmark.

For the purposes of this guide, use the **Typical Setup (Recommended)** option to simplify the process of getting the Access Point up and running quickly with a minimum number of changes to the Access Point's default configuration.

For information on using the Access Point's Advanced Setup option, refer to the *WiNG Access Point System Reference Guide* to familiarize yourself with the feature set supported by the WiNG operating system. The guide is available at *https://portal.motorolasolutions.com/Support/US-EN/Wireless+Networks*.

To configure the Access Point using the Typical Setup Wizard:

8. Select **Typical Setup** from the **Choose One type to Setup the Access Point** field on the Initial Setup Wizard.
9. The Typical Setup Wizard displays the **Access Point Settings** screen to define the Access Point's Standalone versus Virtual Controller AP functionality. This screen also enables selection of the country of operation for the Access Point.

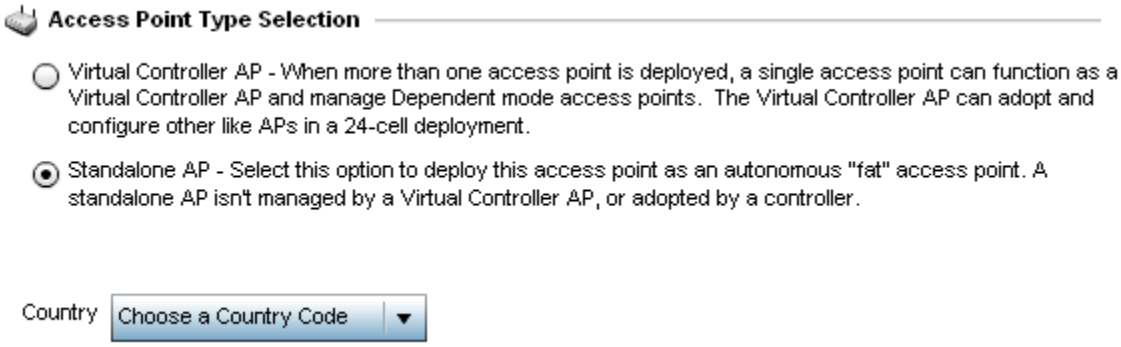

NOTE The professional installer should refer to the Motorola Solutions *WiNG Access Point System Reference Guide* available at *https://portal.motorolasolutions.com/Support/US-EN/Wireless+Networks* for detailed information on how to set the Access Point's transmit power, antenna gain and channel in respect to the delployment country's unique regulatory requirements.

10. Select an **Access Point Type** from the following options:
    - *Virtual Controller AP* - When more than one Access Point is deployed, a single Access Point can function as a Virtual Controller AP. Up to 24 Access Points can be connected to, and managed by, a single Virtual Controller AP of the same Access Point type. These connected Access Points must be the same type as the Virtual Controller AP.
    - *Standalone AP* - Select this option to deploy this Access Point as an autonomous fat Access Point. A Standalone AP isn't managed by a Virtual Controller AP, or adopted by a controller.

NOTE If wanting to adopt the Access Point to a controller or service platform, use the controller or service platform's resident UI to connect to the Access Point, provision its configuration and administrate the Access Point's configuration.

NOTE If designating the Access Point as a Standalone AP, Motorola Solutions recommends the Access Point's UI be used exclusively to define its device configuration, and not the CLI. The CLI provides the ability to define more than one profile and the UI does not. Consequently, the two interfaces cannot be used collectively to manage profiles without an administrator encountering problems.

11. Select the **Country Code** of the country where the Access Point is deployed. Selecting a proper country is a critical task while configuring the Access Point, as it defines the correct channels of operation and ensures compliance to the regulations of the selected country. This field is only available for the Typical Setup Wizard.

12. Select **Next** to set the Access Point's network mode.

MN000879A01B.fm Page 24 Thursday, July 10, 2014 11:01 AM

13. The Typical Setup Wizard displays the **Network Topology** screen to define how the Access Point handles network traffic.

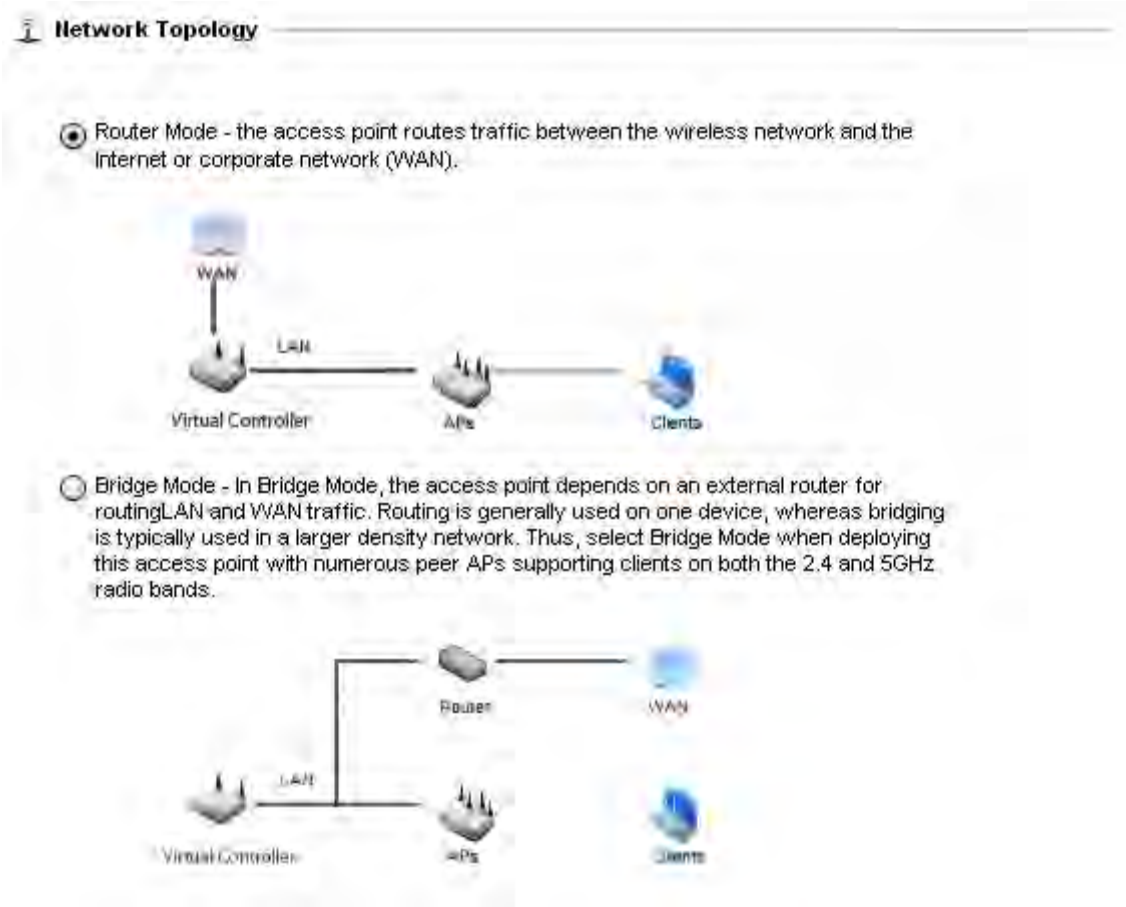

14. Select an Access Point Mode from the available options.
    - *Router Mode* -In Router Mode, the Access Point routes traffic between the local network (LAN) and the Internet or external network (WAN). Router mode is recommended in a deployment supported by just a single Access Point.
    - *Bridge Mode* - In Bridge Mode, the Access Point depends on an external router for routing LAN and WAN traffic. Routing is generally used on one device, whereas bridging is typically used in a larger density network. Select Bridge Mode when deploying this Access Point with numerous peer Access Points supporting clients on both the 2.4GHz and 5GHz radio bands.

NOTE When Bridge Mode is selected, WAN configuration cannot be performed and the Typical Setup Wizard does not display the WAN configuration screen.

MN000879A01B.fm Page 25 Thursday, July 10, 2014 11:01 AM

15. Select **Next**. The Typical Setup Wizard displays the **LAN Configuration** screen to set the Access Point's LAN interface configuration.

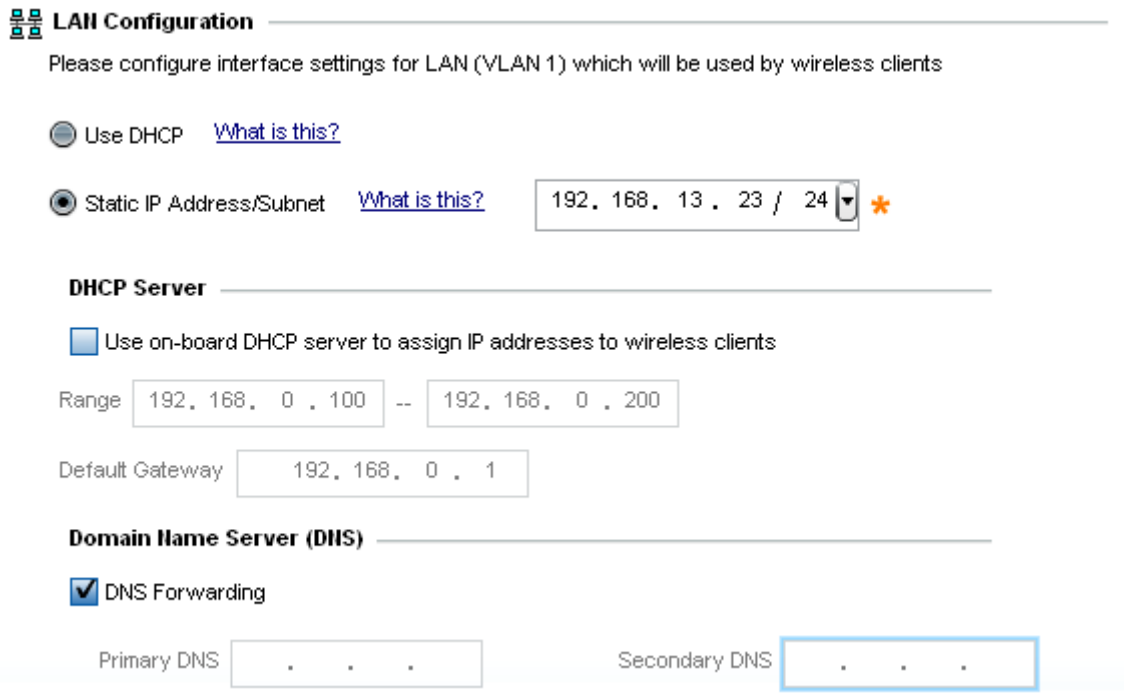

16. Set the following DHCP and Static IP Address/Subnet information for the LAN interface:
    - *Use DHCP* - Select the checkbox to enable an automatic network address configuration using the Access Point's DHCP server.
    - *Static IP Address/Subnet* - Enter an IP Address and a subnet for the Access Point's LAN interface. If *Use DHCP* is selected, this field is not available. When selecting this option, define the following *DHCP Server* and *Domain Name Server (DNS)* resources, as those fields will become enabled on the bottom portion of the screen.
        - *Use on-board DHCP server to assign IP addresses to wireless clients* - Select the checkbox to enable the Access Point's DHCP server to provide IP and DNS information to clients on the LAN interface.
        - *Range* - Enter a starting and ending IP Address range for client assignments on the LAN interface. Avoid assigning IP addresses from x.x.x.1 - x.x.x.10 and x.x.x.255, as they are often reserved for standard network services. This is a required parameter.
        - *Default Gateway* - Define a default gateway address for use with the default gateway. This is a required parameter.

MN000879A01B.fm Page 26 Thursday, July 10, 2014 11:01 AM

- *DNS Forwarding* - Select this option to allow a DNS server to translate domain names into IP addresses. If this option is not selected, a primary and secondary DNS resource must be specified. DNS forwarding is useful when a request for a domain name is made but the DNS server, responsible for converting the name into its corresponding IP address, cannot locate the matching IP address.
  - *Primary DNS* - Enter an IP Address for the main Domain Name Server providing DNS services for the Access Point's LAN interface.
  - *Secondary DNS* - Enter an IP Address for the backup Domain Name Server providing DNS services for the Access Point's LAN interface.

17. Select **Next.** The Typical Setup Wizard displays the **Wireless LAN Setup** screen to set the Access Point's Wireless LAN interface configuration.

18. Set the following WLAN1 Configuration parameters:
    - *SSID* - Configure the SSID for the WLAN.
    - *WLAN Type* - Configure the encryption and authentication to use with this WLAN.
      - *No Authentication and No Encryption* - Configures a network without any authentication. This option also configures the network without encryption. This means that any data transmitted through the network is in plain text. Any device between end points can see the information transmitted. This is the least secure of all network configurations.
      - *Captive Portal Authentication and No Encryption* - Configures a network that uses a RADIUS server to authenticate users before allowing them on to the network. Once on the network, no encryption is used for the data being transmitted through the network. Select this option to use a Web page (either internally or externally hosted) to authenticate users before access is granted to the network.
      - *PSK authentication, WPA2 encryption* - Configures a network that uses PSK authentication and WPA2 encryption. Select this option to implement a pre-shared key that must be correctly shared between the Access Point and requesting clients using this WLAN.

MN000879A01B.fm Page 27 Thursday, July 10, 2014 11:01 AM

19. Select **Next**. The Typical Setup Wizard displays the **RADIUS Server Configuration** screen if required.

    Otherwise, the *Typical Setup Wizard* displays the **Summary and Commit** screen.

20. Use the **Radius Server Configuration** screen to configure the users for the onboard RADIUS server. Use the screen to add, modify and remove RADIUS users.

Some WLANs require authentication using the on-board RADIUS server. User accounts must be added for all users that should be authorized by the server.

Username	Description

MN000879A01B.fm Page 28 Thursday, July 10, 2014 11:01 AM

21. Select **Add User** to display the dialog to enter user information to add to the RADIUS server user database.

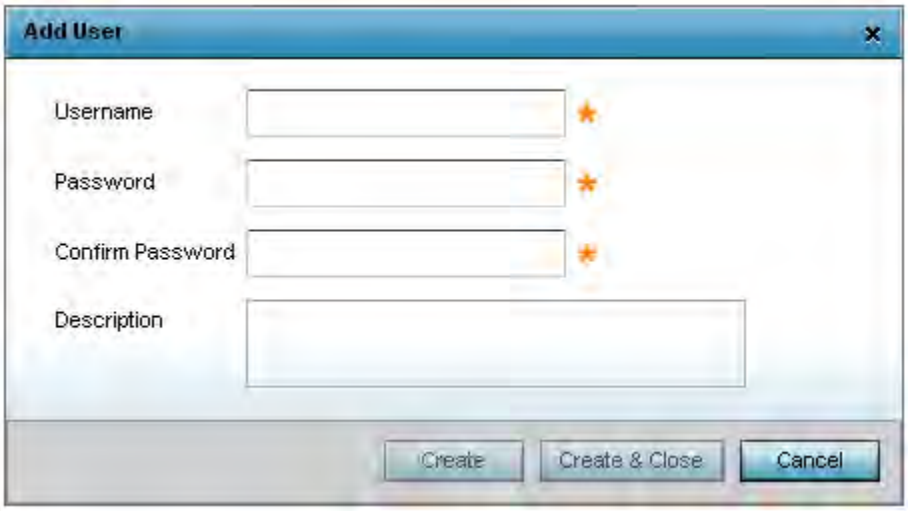

22. Enter the following user information:
    - *Username* - Provide a user name used to authenticate the user.
    - *Password* - Provide a password used to authenticate the user.
    - *Confirm Password* - Confirm the password by entering the same password as entered in the Password field.
    - *Description* - Provide a description to identify the user created in the RADIUS server database.
23. To create the entry in the RADIUS server database and add another user, select **Create**. To create the entry in the RADIUS server database and close the Add User dialog, select **Create & Close**.
24. Select **Modify User** on the RADIUS Server Configuration screen to modify information for an existing user from the RADIUS database. Highlight the user entry then select **Modify User**.

NOTE The *Username* cannot be modified with this dialog.

25. Select **Delete User** on the RADIUS Server Configuration screen to remove information for an existing user from the RADIUS database. Highlight the user entry and select **Delete User**.
26. Select **Confirm** on the dialog displayed. The entry for the user is removed from the RADIUS database.
27. To dismiss the dialog without adding, modifying or removing entries in the RADIUS server database, select **Cancel**.

MN000879A01B.fm Page 29 Thursday, July 10, 2014 11:01 AM

28. Select **Next**. The Typical Setup Wizard displays the **Summary and Commit** screen to summarize the screens (pages) and settings updated using the Typical Setup Wizard.

Access Point Type Page

Access Point Type	Standalone AP

Networking Mode Page

Networking Mode	Router Mode

LAN Configuration Page

LAN Configuration Type	Static IP Address/Subnet
VLAN ID for the LAN Interface	1
Static IP Address/Subnet	192.168.13.23/24

WAN Configuration Page

WAN Configuration Type	Use DHCP
Port to External	GE1 Port

WLAN Configuration

No user intervention or additional settings are required. Its an additional means of validating the Access Point's updated configuration before it's deployed. However, if a screen displays settings not intended as part of the initial configuration, then any screen can be selected again from within the Navigation Panel and its settings modified accordingly.

If the configuration displays as intended, select **Save/Commit** to implement these settings to the Access Point's configuration. If additional changes are warranted based on the summary, either select the target page from the **Navigational Panel**, or use the **Back** and **Next** buttons to scroll to the target screen.

MN000879A01B.fm Page 30 Thursday, July 10, 2014 11:01 AM

4 AP-7522 Access Point Specifications

4.1 Electrical Characteristics

An AP-7522 Access Point has the following electrical characteristics:

Operating Current & Voltage	12VDC, 1A (AUX input voltage) 12VDC PWRS-14000-54R power supply 48VDC, 0.375A (POE) 802.3at AP-PSBIAS-2P3-ATR Power Injector

4.2 Physical Characteristics

An AP-7522 Access Point has the following physical characteristics:

Dimensions	7.1 in. L x 6.5 in. W x 1.6 in. H 180 mm L x 165 mm W x 41 mm H
Housing	Plenum-rated housing (UL2043)
Weight	1.8 lbs/0.82 kg
Operating Temperature	External antennas: -4° F to 104° F/-20° C to 40° C Internal antennas: 32° F to 104° F/0° C to 40° C
Storage Temperature	-40° F to 158° F/-40° C to 70° C
Operating Humidity	85% RH non-condensing
Operating Altitude (maximum)	8,000 ft @ 28C
Storage Altitude (maximum)	30,000 ft @ 12C
Electrostatic Discharge	External antennas: 12kV air, 6kV contact Internal antennas: 15kV air, 8kV contact

MN000879A01B.fm Page 31 Thursday, July 10, 2014 11:01 AM

4.3 Radio Characteristics

The AP-7522 Access Point has the following radio characteristics:

Data Rates Supported	802.11b/g: 1,2,5.5,11,6,9,12,18,24,36,48 and 54 Mbps 802.11a: 6,9,12,18,24,36,48, and 54 Mbps 802.11a/n: MCS 0-23 up to 300 Mbps 802.11ac: MCS 0-9 up to 866.7 Gbps Turbo Mode (256QAM) on 2.4 GHz band: up to 400 Mbps
Wireless Medium	*Direct Sequence Spread Spectrum* (DSSS) *Orthogonal Frequency Division Multiplexing* (OFDM) *Spatial multiplexing* (MIMO)
Network Standards	IEEE 802.11a/b/g/n/ac 802.11d and 802.11i WPA2 WMM and WMM-UAPSD
Transmit Power Adjustment	1dB increments

MN000879A01B.fm Page 32 Thursday, July 10, 2014 11:01 AM

5 Regulatory Information

5.1 Regulatory Information

This device is approved under Motorola Solutions, Inc.

This guide applies to the following Model Numbers: AP-7522, AP-7522I.

All Motorola Solutions devices are designed to be compliant with rules and regulations in locations they are sold and will be labeled as required.

Local language translations are available at the following website:
https://portal.motorolasolutions.com/Support/US-EN/Wireless+Networks

Any changes or modifications to Motorola Solutions equipment, not expressly approved by Motorola Solutions, could void the user's authority to operate the equipment.

Motorola Solutions devices are professionally installed, the Radio Frequency Output Power will not exceed the maximum allowable limit for the country of operation.

Antennas: Use only the supplied or an approved replacement antenna. Unauthorized antennas, modifications, or attachments could cause damage and may violate regulations.

This device is only to be used with a Motorola Solutions Wireless Switch.

Declared maximum operating temperature: 40°C.

5.2 Wireless Device Country Approvals

Regulatory markings, subject to certification, are applied to the device signifying the radio(s) is/are approved for use in the following countries: United States, Canada, Japan, China, S. Korea, Australia, and Europe 1

Please refer to the *Declaration of Conformity* (DoC) for details of other country markings. This is available at:
http://www.motorolasolutions.com/doc

Note: For 2.4GHz or 5GHz Products: Europe includes, Austria, Belgium, Bulgaria, Czech Republic, Cyprus, Denmark, Estonia, Finland, France, Germany, Greece, Hungary, Iceland, Ireland, Italy, Latvia, Liechtenstein, Lithuania, Luxembourg, Malta, Netherlands, Norway, Poland, Portugal, Romania, Slovak Republic, Slovenia, Spain, Sweden, Switzerland and the United Kingdom.

⚠ Operation of the device without regulatory approval is illegal.

5.2.1 Country Selection

Select only the country in which you are using the device. Any other selection will make the operation of this device illegal. Some Access Points are specifically designed to operate in certain countries (Example; -US for the United States, -EU for the European Union).

Country Roaming

This device incorporates the International Roaming feature (IEEE802.11d) which will ensure the product operates on the correct channels for the particular country of use.

5.2.2 Frequency of Operation – FCC and IC

5 GHz Only

Industry Canada Statement:

Caution: The device for the band 5150-5250 MHz is only for indoor usage to reduce potential for harmful interference to co-Channel mobile satellite systems. High power radars are allocated as primary users (meaning they have priority) of 5250-5350 MHz and 5650-5850 MHz and these radars could cause interference and/or damage to LE-LAN devices.

Avertissement: Le dispositif fonctionnant dans la bande 5150-5250 MHz est réservé uniquement pour une utilisation à l'intérieur afin de réduire les risques de brouillage préjudiciable aux systèmes de satellites mobiles utilisant les mêmes canaux.

Les utilisateurs de radars de haute puissance sont désignés utilisateurs principaux (c.-à-d., qu'ils ont la priorité) pour les bands 5250-5350 MHz et 5650-5850 MHz et que ces radars pourraient causer du brouillage et/ou des dommages aux dispositifs LAN-EL.

2.4 GHz Only

The available channels for 802.11bg operation in the US are Channels 1 to 11. The range of channels is limited by firmware.

Indoor Use

This device was designed for Indoor use.

5.3 Health and Safety Recommendations

Ergonomic Recommendations

Caution: In order to avoid or minimize the potential risk of ergonomic injury follow the recommendations below. Consult with your local Health & Safety Manager to ensure that you are adhering to your company's safety programs to prevent employee injury.

- Reduce or eliminate repetitive motion
- Maintain a natural position
- Reduce or eliminate excessive force
- Keep objects that are used frequently within easy reach
- Perform tasks at correct heights
- Reduce or eliminate vibration
- Reduce or eliminate direct pressure
- Provide adjustable workstations
- Provide adequate clearance
- Provide a suitable working environment
- Improve work procedures

Vehicle Installation

RF signals may affect improperly installed or inadequately shielded electronic systems in motor vehicles (including safety systems). Check with the manufacturer or its representative regarding your vehicle. You should also consult the manufacturer of any equipment that has been added to your vehicle.

An air bag inflates with great force. DO NOT place objects, including either installed or portable wireless equipment, in the area over the air bag or in the air bag deployment area. If in-vehicle wireless equipment is improperly installed and the air bag inflates, serious injury could result.

Position your device within easy reach. Be able to access your device without removing your eyes from the road.

Note: Connection to an alert device that will cause a vehicle horn to sound or lights to flash, on receipt of a call on public roads, is not permitted.

IMPORTANT

Before installing or using, check state and local laws regarding windshield mounting and use of equipment.

For Safe installation

- Do not put your phone in a location that obstructs the drivers vision or interferes with the operation of the Vehicle.
- Do not cover an airbag.

Safety on the Road

Do not take notes or use the device while driving. Jotting down a "to do" list or flipping through your address book takes attention away from your primary responsibility, driving safely.

When driving a car, driving is your first responsibility - Give full attention to driving. Check the laws and regulations on the use of wireless devices in the areas where you drive. Always obey them.

5.3.1 Warnings for the use of Wireless Devices

Please observe all warning notices with regard to the usage of wireless devices.

5.3.2 Potentially Hazardous Atmospheres – Fixed Installations

You are reminded of the need to observe restrictions on the use of radio devices in fuel depots, chemical plants etc. and areas where the air contains chemicals or particles (such as grain, dust, or metal powders).

5.3.3 Safety in Hospitals

Wireless devices transmit radio frequency energy and may affect medical electrical equipment. When installed adjacent to other equipment, it is advised to verify that the adjacent equipment is not adversely affected.

Pacemakers

Pacemaker manufacturers recommended that a minimum of 15cm (6 inches) be maintained between a handheld wireless device and a pacemaker to avoid potential interference with the pacemaker. These recommendations are consistent with independent research and recommendations by Wireless Technology Research.

Persons with Pacemakers:

- Should ALWAYS keep the device more than 15cm (6 inches) from their pacemaker when turned ON.
- Should not carry the device in a breast pocket.
- Should use the ear furthest from the pacemaker to minimize the potential for interference.
- If you have any reason to suspect that interference is taking place, turn OFF your device.

Other Medical Devices

Please consult your physician or the manufacturer of the medical device, to determine if the operation of your wireless product may interfere with the medical device.

5.4 RF Exposure Guidelines

5.4.1 Safety Information

Reducing RF Exposure - Use Properly

Only operate the device in accordance with the instructions supplied.

5.4.2 International

The device complies with internationally recognized standards covering human exposure to electromagnetic fields from radio devices. For information on "International" human exposure to electromagnetic fields refer to the Motorola Solutions *Declaration of Conformity* (DoC) at: *http://www.motorolasolutions.com/doc*

For further information on the safety of RF energy from wireless devices - see *http://responsibility.motorolasolutions.com/index.php/downloads/*

located under Wireless Communications and Health

5.4.3 EU

Remote and Standalone Antenna Configurations

To comply with EU RF exposure requirements, antennas that are mounted externally at remote locations or operating near users at stand-alone desktop of similar configurations must operate with a minimum separation distance of 25cm from all persons.

5.4.4 US and Canada

Co-located statement

To comply with FCC RF exposure compliance requirements, the antenna used for this transmitter must not be co-located or operating in conjunction with any other transmitter/antenna except those already approved in this filling.

To satisfy US and Canadian RF exposure requirements, a transmitting device must operate with a minimum separation distance of 25cm or more from a person's body.

Pour satisfaire aux exigences Américaines et Canadiennes d'exposition aux radiofréquences, un dispositif de transmission doit fonctionner avec une distance de séparation minimale de 25cm ou plus de corps d'une personne.

Radiation Exposure Statement

This equipment complies with IC radiation exposure limits set forth for an uncontrolled environment. This equipment should be installed and operated with minimum distance 25cm between the radiator and your body.

NOTE IMPORTANTE: (Pour l'utilisation de dispositifs mobiles)

Déclaration d'exposition aux radiations:

Cet équipement est conforme aux limites d'exposition aux rayonnements IC établies pour un environnement non contrôlé. Cet équipement doit être installé et utilisé avec un minimum de 25 cm de distance entre la source de rayonnement et votre corps.

Remote and Standalone Antenna Configurations

To comply with FCC RF exposure requirements, Antennas that are mounted externally must be professionally installed at a fixed location and operate with a minimum distance of 25cm from all persons.

To comply with FCC Antenna requirements, the Antenna must be adjusted such that the RF emission lobes are below 30 degrees elevation.

5.5 Power Supply

This device must be powered from a 802.3af or 802.3at compliant power source which has been certified by the appropriate agencies, or by a Motorola approved UL LISTED ITE (IEC/EN 60950-1, LPS/SELV) power supply with electrical ratings: Output 12 Vdc, min 1.25 A or 48 Vdc min 0.375 A (POE), with a recommended ambient temperature greater than 40 degrees C. Use of alternative power supply will invalidate any approvals given to this unit and may be dangerous.

5.6 Radio Frequency Interference Requirements—FCC

Tested to comply with FCC Standards
FOR HOME OR OFFICE USE

This equipment has been tested and found to comply with the limits for a Class B digital device, pursuant to Part 15 of the FCC rules. These limits are designed to provide reasonable protection against harmful interference in a residential installation. This equipment generates, uses and can radiate radio frequency energy and, if not installed and used in accordance with the instructions, may cause harmful interference to radio communications. However there is no guarantee that interference will not occur in a particular installation. If this equipment does cause harmful interference to radio or television reception, which can be determined by turning the equipment off and on, the user is encouraged to try to correct the interference by one or more of the following measures:

- Reorient or relocate the receiving antenna
- Increase the separation between the equipment and receiver
- Connect the equipment into an outlet on a circuit different from that to which the receiver is connected
- Consult the dealer or an experienced radio/TV technician for help.

5.6.1 Radio Transmitters (Part 15)

This device complies with Part 15 of the FCC Rules. Operation is subject to the following two conditions: (1) this device may not cause harmful interference, and (2) this device must accept any interference received, including interference that may cause undesired operation.

5.6.2 Radio Frequency Interference Requirements - Canada

CAC ICES-3 (B)/NMB-3(B)

Radio Transmitters

For RLAN Devices:

The use of 5 GHz RLAN's, for use in Canada, have the following restrictions:

- Restricted Band 5.60 – 5.65 GHz

This device complies with RSS 210 of Industry Canada. Operation is subject to the following two conditions: (1) this device may not cause harmful interference and (2) this device must accept any interference received, including interference that may cause undesired operation.

Le présent appareil est conforme aux CNR d'Industrie Canada applicables aux appareils radio exempts de licence. L'exploitation est autorisée aux deux conditions suivantes : (1) l'appareil ne doit pas produire de brouillage, et (2) l'utilisateur de l'appareil doit accepter tout brouillage radioélectrique subi, même si le brouillage est susceptible d'en compromettre le fonctionnement.

Label Marking: The Term "IC:" before the radio certification only signifies that Industry Canada technical specifications were met

SIn accordance with the regulations of Industry Canada, this radio transmitter can operate with an antenna of a type and a maximum gain (or lower) approved for the transmitter by Industry Canada. With the aim of reducing the risk of radio interference to other users, the chosen antenna type and its gain should be selected so that the equivalent isotropically radiated power (e.i.r.p.) does not exceed the intensity necessary for the establishment of a satisfactory connection.

Conformément à la réglementation d'Industrie Canada, le présent émetteur radio peut fonctionner avec une antenne d'un type et d'un gain maximal (ou inférieur) approuvé pour l'émetteur par Industrie Canada. Dans le but de réduire les risques de brouillage radioélectriqueà l'intention des autres utilisateurs, il faut choisir le type d'antenne et son gain de sorte que la puissance isotrope rayonnée équivalente (p.i.r.e.) ne dépasse pas l'intensité nécessaire àl'établissement d'une communication satisfaisante.

In compliance with respective local regulatory law, Motorola Solutions AP software provides professional installers the option to configure the antenna type and antenna gain for approved antennas.

This radio transmitter (AP-7522, AP-7522I) has been approved by Industry Canada to operate with the antenna types listed below and having a maximum gain allowable and the impedance required for each type of antenna. The antenna types not included in this list, or whose gain is higher than the maximum gain indicates, are strictly prohibited for the operation of the transmitter.

Refer to *AP-7522 Antennas on page 7* for a listing of the 2.4 GHz and 5 GHz antennas initially approved for use with AP-7522 and AP7522I Access Points.

Le présent émetteur radio (AP-7522, AP-7522I) a été approuvé par Industrie Canada pour fonctionner avec les types d'antenne énumérés ci-dessous et ayant un gain admissible maximal et l'impédance requise pour chaque type d'antenne. Les types d'antenne non inclus dans cette liste ou dont le gain est supérieur au gain maximal indiqué, sont strictement interdits pour l'exploitation de l'émetteur.

5.7 CE Marking and European Economic Area (EEA)

WARNING: This is a Class B product. In a domestic environment this product may cause radio interference in which case the user may be required to take adequate measures.

The use of 2.4GHz RLAN's, for use through the EEA, have the following restrictions:

- Maximum radiated transmit power of 100 mW EIRP in the frequency range 2.400 -2.4835 GHz.

MN000879A01B.fm Page 39 Thursday, July 10, 2014 11:01 AM

5.8 Statement of Compliance

Motorola hereby, declares that this device is in compliance with the essential requirements and other relevant provisions of Directive 1999/5/EC. A Declaration of Conformity may be obtained from *http://www.motorolasolutions.com/doc*.

5.9 Japan (VCCI) - Voluntary Control Council for Interference

Class B ITE

この装置は、情報処理装置等電波障害自主規制協議会（ＶＣＣＩ）の基準に基づくクラスB情報技術装置です。この装置は、家庭環境で使用することを目的としていますが、この装置がラジオやテレビジョン受信機に近接して使用されると、受信障害を引き起こすことがあります。　取扱説明書に従って正しい取り扱いをして下さい。

5.10 Korea Warning Statement for Class B ITE

기 종 별	사 용 자 안 내 문
B급 기기 (가정용 방송통신기자재)	이 기기는 가정용(B급) 전자파적합기기로서 주로 가정에서 사용하는 것을 목적으로 하며, 모든 지역에서 사용할 수 있습니다.

5.11 Other Countries

Australia

Use of 5GHz RLAN's in Australia is restricted in the following band 5.50 – 5.65GHz.

Brazil

Declarações Regulamentares para AP-7522 - Brasil

Nota: A marca de certificação se aplica ao Transceptor, modelo AP-7522. Este equipamento opera em caráter secundário, isto é, não tem direito a proteção contra interferência prejudicial, mesmo de estações do mesmo tipo, e não pode causar interferência a sistemas operando em caráter primário. Para maiores informações sobre ANATEL consulte o site: *www.anatel.gov.br*

Este equipamento opera em caráter secundário, isto é, não tem direito a proteção contra interferência prejudicial, mesmo de estações do mesmo tipo, e não pode causar interferência a sistemas operando em caráter primário.

Este produto está homologado pela Anatel, de acordo com os procedimentos regulamentados pela Resolução n°242/2000 e atende aos requisitos técnicos aplicados, incluindo os limites de exposição da Taxa de Absorção Específica referente a campos elétricos, magnéticos e eletromagnéticos de radiofrequência, de acordo com as Resoluções n° 303/2002 e 533/2009.

Este dispositivo está em conformidade com as diretrizes de exposição à radiofrequência quando posicionado pelo menos 25 centímetros de distância do corpo. Para maiores informações, consulte o site da Anatel

Chile

Este equipo cumple con la Resolución No 403 de 2008, de la Subsecretaria de telecomunicaciones, relativa a radiaciones electromagnéticas.

China

Mexico

Restrict Frequency Range to: 2.450 – 2.4835 GHz.

S. Korea

무선설비는 운용 중 전파혼신 가능성이 있음

당해 무선설비 는전파혼 신 가능성이 있으므로 인명안전과 관련된 서비스는 할 수 없습니다.

Taiwan

臺灣

低功率電波輻射性電機管理辦法

第十二條
經型式認證合格之低功率射頻電機，非經許可，公司、商號或使用者均不得擅自變更頻率、加大功率或變更原設計之特性及功能。

第十四條

低功率射頻電機之使用不得影響飛航安全及干擾合法通信;經發現有干擾現象時，應立即停用，並改善至無干擾時方得繼續使用。
前項合法通信，指依電信規定作業之無線電通信。
低功率射頻電機須忍受合法通信或工業、科學及醫療用電波輻射性電機設備之干擾。

在 5.25-5.35 秭赫頻帶內操作之無線資訊傳輸設備，限於室內使用

Thailand

เครื่องโทรคมนาคมและอุปกรณ์นี้ มีความสอดคล้องตามข้อกำหนดของ กทช.

5.12 Waste Electrical and Electronic Equipment (WEEE)

English: For EU Customers: All products at the end of their life must be returned to Motorola Solutions for recycling. For information on how to return product, please go to: http://www.motorolasolutions.com/recycling/weee.

Français: Clients de l'Union Européenne: Tous les produits en fin de cycle de vie doivent être retournés à Motorola Solutions pour recyclage. Pour de plus amples informations sur le retour de produits, consultez : http://www.motorolasolutions.com/recycling/weee.

Español: Para clientes en la Unión Europea: todos los productos deberán entregarse a Motorola Solutions al final de su ciclo de vida para que sean reciclados. Si desea más información sobre cómo devolver un producto, visite: http://www.motorolasolutions.com/recycling/weee.

Български: За клиенти от ЕС: След края на полезния им живот всички продукти трябва да се връщат на Motorola Solutions за рециклиране. За информация относно връщането на продукти, моля отидете на адрес: http://www.motorolasolutions.com/recycling/weee.

Deutsch: Für Kunden innerhalb der EU: Alle Produkte müssen am Ende ihrer Lebensdauer zum Recycling an Motorola Solutions zurückgesandt werden. Informationen zur Rücksendung von Produkten finden Sie unter http://www.motorolasolutions.com/recycling/weee.

Italiano: per i clienti dell'UE: tutti i prodotti che sono giunti al termine del rispettivo ciclo di vita devono essere restituiti a Motorola Solutions al fine di consentirne il riciclaggio. Per informazioni sulle modalità di restituzione, visitare il seguente sito Web: http://www.motorolasolutions.com/recycling/weee.

Português: Para clientes da UE: todos os produtos no fim de vida devem ser devolvidos à Motorola Solutions para reciclagem. Para obter informações sobre como devolver o produto, visite: http://www.motorolasolutions.com/recycling/weee.

Nederlands: Voor klanten in de EU: alle producten dienen aan het einde van hun levensduur naar Motorola Solutions te worden teruggezonden voor recycling. Raadpleeg http://www.motorolasolutions.com/recycling/weee voor meer informatie over het terugzenden van producten.

Polski: Klienci z obszaru Unii Europejskiej: Produkty wycofane z eksploatacji nale¿y zwróciæ do firmy Motorola Solutions w celu ich utylizacji. Informacje na temat zwrotu produktów znajduj¹ siê na stronie internetowej http://www.motorolasolutions.com/recycling/weee.

Čeština: Pro zákazníky z EU: Všechny produkty je nutné po skonèení jejich životnosti vrátit spoleènosti Motorola Solutions k recyklaci. Informace o zpùsobu vrácení produktu najdete na webové stránce: http://www.motorolasolutions.com/recycling/weee.

Eesti: EL klientidele: kõik tooted tuleb nende eluea lõppedes tagastada taaskasutamise eesmärgil Motorola Solutions'ile. Lisainformatsiooni saamiseks toote tagastamise kohta külastage palun aadressi: http://www.motorolasolutions.com/recycling/weee.

Magyar: Az EU-ban vásárlóknak: Minden tönkrement terméket a Motorola Solutions vállalathoz kell eljuttatni újrahasznosítás céljából. A termék visszajuttatásának módjával kapcsolatos tudnivalókért látogasson el a http://www.motorolasolutions.com/recycling/weee weboldalra.

Svenska: För kunder inom EU: Alla produkter som uppnått sin livslängd måste returneras till Motorola Solutions för återvinning. Information om hur du returnerar produkten finns på http://www.motorolasolutions.com/recycling/weee.

Suomi: Asiakkaat Euroopan unionin alueella: Kaikki tuotteet on palautettava kierrätettäväksi Motorola Solutions-yhtiöön, kun tuotetta ei enää käytetä. Lisätietoja tuotteen palauttamisesta on osoitteessa http://www.motorolasolutions.com/recycling/weee.

Dansk: Til kunder i EU: Alle produkter skal returneres til Motorola Solutions til recirkulering, når de er udtjent. Læs oplysningerne om returnering af produkter på: http://www.motorolasolutions.com/recycling/weee.

Ελληνικά: Για πελάτες στην Ε.Ε.: Όλα τα προϊόντα, στο τέλος της διάρκειας ζωής τους, πρέπει να επιστρέφονται στην Motorola Solutions για ανακύκλωση. Για περισσότερες πληροφορίες σχετικά με την επιστροφή ενός προϊόντος, επισκεφθείτε τη διεύθυνση http://www.motorolasolutions.com/recycling/weee στο Διαδίκτυο.

Malti: Għal klijenti fl-UE: il-prodotti kollha li jkunu waslu fl-aħħar tal-ħajja ta' l-użu tagħhom, iridu jiġu rritornati għand Motorola Solutions għar-riċiklaġġ. Għal aktar tagħrif dwar kif għandek tirritorna l-prodott, jekk jogħġbok żur: http://www.motorolasolutions.com/recycling/weee.

Românesc: Pentru clienţii din UE: Toate produsele, la sfârşitul duratei lor de funcţionare, trebuie returnate la Motorola Solutions pentru reciclare. Pentru informaţii despre returnarea produsului, accesaţi: http://www.motorolasolutions.com/recycling/weee.

Slovenski: Za kupce v EU: vsi izdelki se morajo po poteku življenjske dobe vrniti podjetju Motorola Solutions za reciklažo. Za informacije o vračilu izdelka obiščite: http://www.motorolasolutions.com/recycling/weee.

Slovenčina: Pre zákazníkov z krajín EU: Všetky výrobky musia byť po uplynutí doby ich životnosti vrátené spoločnosti Motorola Solutions na recykláciu. Bližšie informácie o vrátení výrobkov nájdete na: http://www.motorolasolutions.com/recycling/weee.

Lietuvių: ES vartotojams: visi gaminiai, pasibaigus jų eksploatacijos laikui, turi būti grąžinti utilizuoti į kompaniją „Motorola Solutions“. Daugiau informacijos, kaip grąžinti gaminį, rasite: http://www.motorolasolutions.com/recycling/weee.

Latviešu: ES klientiem: visi produkti pēc to kalpošanas mūža beigām ir jānogādā atpakaļ Motorola Solutions otrreizējai pārstrādei. Lai iegūtu informāciju par produktu nogādāšanu Motorola, lūdzu, skatiet: http://www.motorolasolutions.com/recycling/weee.

Türkçe: AB Müşterileri için: Kullanım süresi dolan tüm ürünler geri dönüştürme için Motorola Solutions'ya iade edilmelidir. Ürünlerin nasıl iade edileceği hakkında bilgi için lütfen şu adresi ziyaret edin: http://www.motorolasolutions.com/recycling/weee.

5.13 TURKISH WEEE Statement of Compliance

EEE Yönetmeliğine Uygundur

MN000879A01B.fm Page 43 Thursday, July 10, 2014 11:01 AM

6 Motorola Solutions Support Center

If you have a problem with your equipment, contact support for your region.

Contact information is available at: https://portal.motorolasolutions.com/Support/US-EN

When contacting Motorola Solutions support, please provide the following information:

- Serial number of the unit
- Model number or product name
- Software type and version number

Motorola Solutions responds to calls by e-mail, telephone, or fax within the time limits set forth in support agreements. If you purchased your product from a Motorola Solutions business partner, contact that business partner for support.

Customer Support Web Sites

The Motorola Solutions Support Central Web site, located at https://portal.motorolasolutions.com/Support/US-EN.

provides information and online assistance including developer tools, software downloads, product manuals and online repair requests.

Manuals

https://portal.motorolasolutions.com/Support/US-EN/Wireless+Networks.

General Information

Obtain additional information by contacting Motorola Solutions at:

Telephone (North America): 1-800-722-6234

Telephone (International): +1-631-738-5200

Website: http://www.motorolasolutions.com

MN000879A01B.fm Page 44 Thursday, July 10, 2014 11:01 AM

7 AP-7522 Access Point China ROHS Compliance

部件名称 (Parts)	有毒有害物质或元素					
	铅 (Pb)	汞 (Hg)	镉 (Cd)	六价铬 (Cr^{6+})	多溴联苯 (PBB)	多溴二苯醚 (PBDE)
金属部件 (Metal Parts)	X	O	O	O	O	O
电路模块 (Circuit Modules)	X	O	O	O	O	O
电缆及电缆组件 (Cables and Cable Assemblies)	X	O	O	O	O	O
塑料和聚合物部件 (Plastic and Polymeric Parts)	O	O	O	O	O	O
光学和光学组件 (Optics and Optical Components)	O	O	O	O	O	O
电池 (Batteries)	O	O	O	O	O	O

O：表示该有毒有害物质在该部件所有均质材料中的含量均在 SJ/T11363-2006 标准规定的限量要求以下。

X：表示该有毒有害物质至少在该部件的某一均质材料中的含量超出 SJ/T11363-2006 标准规定的限量要求。

对销售之日的所售产品，本表表示，公司供应链的电子信息产品可能包含这些物质。注意：在所售产品中可能会也可能不会含有所有所列的部件。

This table was created to comply with China RoHS requirements for Motorola Solutions' AP-7522 and AP-7522I Access Points.

MN000879A01B.fm Page 45 Thursday, July 10, 2014 11:01 AM

MN000879A01B.fm Page 46 Thursday, July 10, 2014 11:01 AM

MN000879A01B.fm Page 47 Thursday, July 10, 2014 11:01 AM

Motorola Solutions, Inc.
1301 E. Algonquin Rd.
Schaumburg, IL 60196-1078, U.S.A.
http://www.motorolasolutions.com

MOTOROLA, MOTO, MOTOROLA SOLUTIONS and the Stylized M Logo are trademarks or registered trademarks of Motorola Trademark Holdings, LLC and are used under license. All other trademarks are the property of their respective owners.
© 2014 Motorola Solutions, Inc. All Rights Reserved.

MN000879A01
Revision B July 2014