System Check_Head_750MHz

DUT: D750V3-1107

Communication System: CW ; Frequency: 750 MHz;Duty Cycle: 1:1
Medium: HSL_750_200927 Medium parameters used: f = 750 MHz; σ = 0.893 S/m; ε_r = 42.549; ρ = 1000 kg/m^3
Ambient Temperature：23.3 ℃; Liquid Temperature：22.3 ℃

DASY5 Configuration:
- Probe: EX3DV4 - SN3753; ConvF(9.83, 9.83, 9.83) @ 750 MHz; Calibrated: 2020/6/25
- Sensor-Surface: 1.4mm (Mechanical Surface Detection)
- Electronics: DAE4 Sn854; Calibrated: 2020/5/26
- Phantom: SAM_Right; Type: SAM; Serial: TP:1446
- Measurement SW: DASY52, Version 52.10 (4);SEMCAD X Version 14.6.14 (7483)

Pin=250mW/Area Scan (61x61x1): Interpolated grid: dx=1.500 mm, dy=1.500 mm
Maximum value of SAR (interpolated) = 2.61 W/kg

Pin=250mW/Zoom Scan (5x5x7)/Cube 0: Measurement grid: dx=8mm, dy=8mm, dz=5mm
Reference Value = 58.75 V/m; Power Drift = -0.09 dB
Peak SAR (extrapolated) = 3.21 W/kg
SAR(1 g) = 1.94 W/kg; SAR(10 g) = 1.30 W/kg
Maximum value of SAR (measured) = 2.74 W/kg

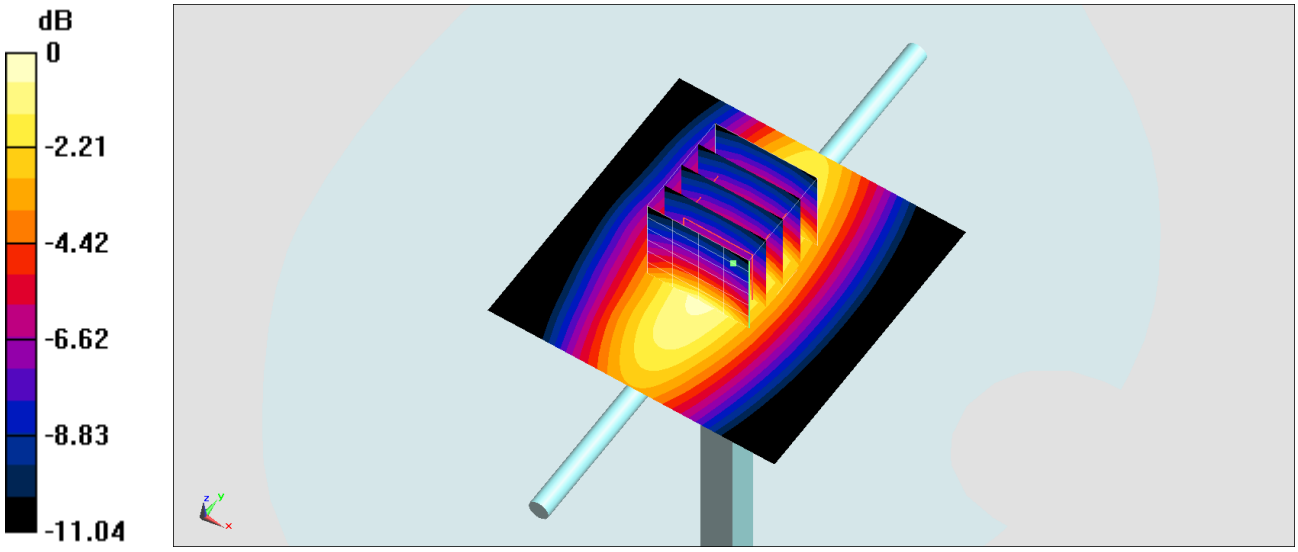

0 dB = 2.74 W/kg = 4.38 dBW/kg

System Check_Head_750MHz

DUT: D750V3-1107

Communication System: CW ; Frequency: 750 MHz;Duty Cycle: 1:1
Medium: HSL_750_200928 Medium parameters used: f = 750 MHz; σ = 0.89 S/m; ε_r = 42.349; ρ = 1000 kg/m^3
Ambient Temperature：23.2 ℃; Liquid Temperature：22.2 ℃

DASY5 Configuration:
- Probe: ES3DV3 - SN3115; ConvF(6.34, 6.34, 6.34) @ 750 MHz; Calibrated: 2020/1/3
- Sensor-Surface: 3mm (Mechanical Surface Detection)
- Electronics: DAE4 Sn778; Calibrated: 2020/6/4
- Phantom: SAM_Right; Type: SAM; Serial: TP:1446
- Measurement SW: DASY52, Version 52.10 (4);SEMCAD X Version 14.6.14 (7483)

Pin=250mW/Area Scan (61x61x1): Interpolated grid: dx=1.500 mm, dy=1.500 mm
Maximum value of SAR (interpolated) = 2.52 W/kg

Pin=250mW/Zoom Scan (5x5x7)/Cube 0: Measurement grid: dx=8mm, dy=8mm, dz=5mm
Reference Value = 54.14 V/m; Power Drift = -0.12 dB
Peak SAR (extrapolated) = 3.01 W/kg
SAR(1 g) = 2.16 W/kg; SAR(10 g) = 1.48 W/kg
Maximum value of SAR (measured) = 2.48 W/kg

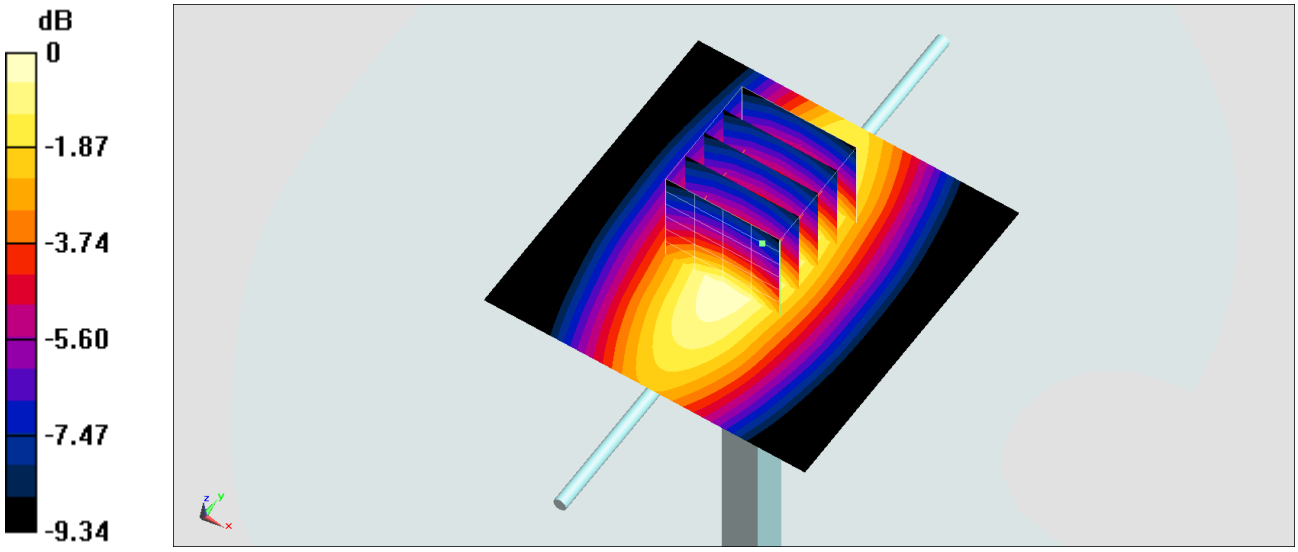

0 dB = 2.48 W/kg = 3.94 dBW/kg

System Check_Head_750MHz

DUT: D750V3-1107

Communication System: CW; Frequency: 750 MHz;Duty Cycle: 1:1
Medium: HSL_750_201007 Medium parameters used: f = 750 MHz; σ = 0.898 S/m; ε_r = 42.908; ρ = 1000 kg/m^3
Ambient Temperature：23.3 ℃; Liquid Temperature：22.3 ℃

DASY5 Configuration:
- Probe: ES3DV3 - SN3124;ConvF(6.47, 6.47, 6.47) @ 750 MHz;Calibrated: 2019/12/18
- Sensor-Surface: 3mm (Mechanical Surface Detection)
- Electronics: DAE4 Sn316; Calibrated: 2019/12/20
- Phantom: SAM_Right; Type: QD000P40CD; Serial: TP:1815
- Measurement SW: DASY52, Version 52.10 (4);SEMCAD X Version 14.6.14 (7483)

Pin=250mW/Area Scan (61x61x1): Interpolated grid: dx=1.500 mm, dy=1.500 mm
Maximum value of SAR (interpolated) = 2.44 W/kg

Pin=250mW/Zoom Scan (5x5x7)/Cube 0: Measurement grid: dx=8mm, dy=8mm, dz=5mm
Reference Value = 53.83 V/m; Power Drift = -0.07 dB
Peak SAR (extrapolated) = 2.91 W/kg
SAR(1 g) = 2.05 W/kg; SAR(10 g) = 1.38 W/kg
Maximum value of SAR (measured) = 2.37 W/kg

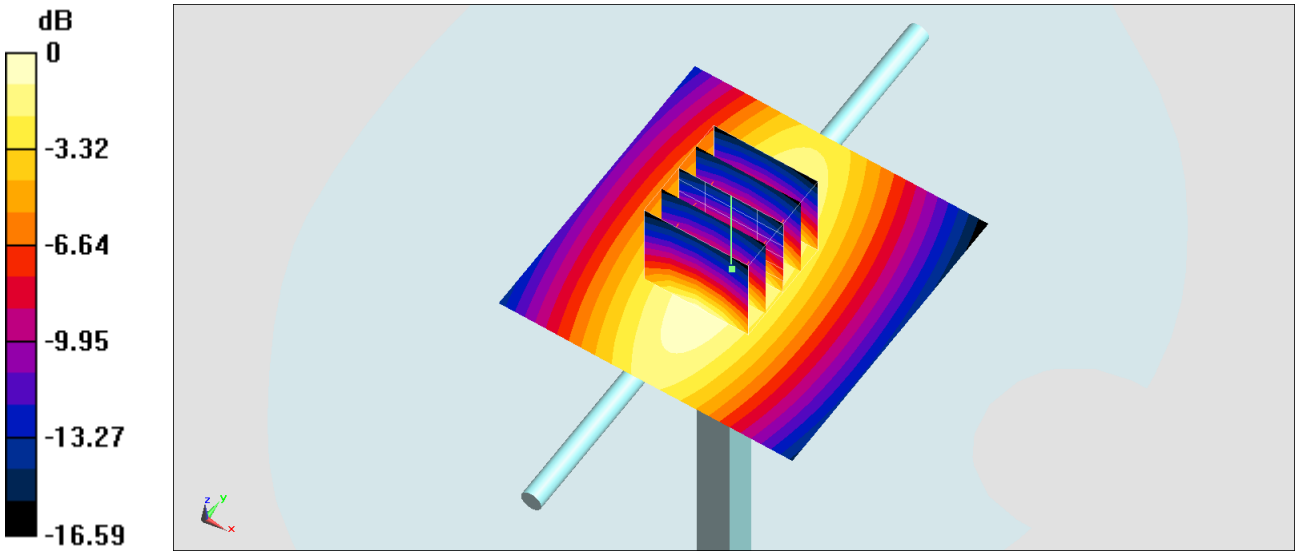

0 dB = 2.44 W/kg = 3.87 dBW/kg

System Check_Head_835MHz

DUT: D835V2-4d167

Communication System: CW ; Frequency: 835 MHz;Duty Cycle: 1:1
Medium: HSL_835_200928 Medium parameters used: f = 835 MHz; σ = 0.901 S/m; ε_r = 42.474; ρ = 1000 kg/m^3
Ambient Temperature：23.2 ℃; Liquid Temperature：22.2 ℃

DASY5 Configuration:
- Probe: ES3DV3 - SN3115; ConvF(6.15, 6.15, 6.15) @ 835 MHz; Calibrated: 2020/1/3
- Sensor-Surface: 3mm (Mechanical Surface Detection)
- Electronics: DAE4 Sn778; Calibrated: 2020/6/4
- Phantom: SAM_Right; Type: SAM; Serial: TP:1446
- Measurement SW: DASY52, Version 52.10 (4);SEMCAD X Version 14.6.14 (7483)

Pin=50mW/Area Scan (61x61x1): Interpolated grid: dx=1.500 mm, dy=1.500 mmMaximum value of SAR (interpolated) = 0.603 W/kg

Pin=50mW/Zoom Scan (5x5x7)/Cube 0: Measurement grid: dx=8mm, dy=8mm, dz=5mm
Reference Value = 24.03 V/m; Power Drift = 0.15 dB
Peak SAR (extrapolated) = 0.786 W/kg
SAR(1 g) = 0.519 W/kg; SAR(10 g) = 0.340 W/kg
Maximum value of SAR (measured) = 0.609 W/kg

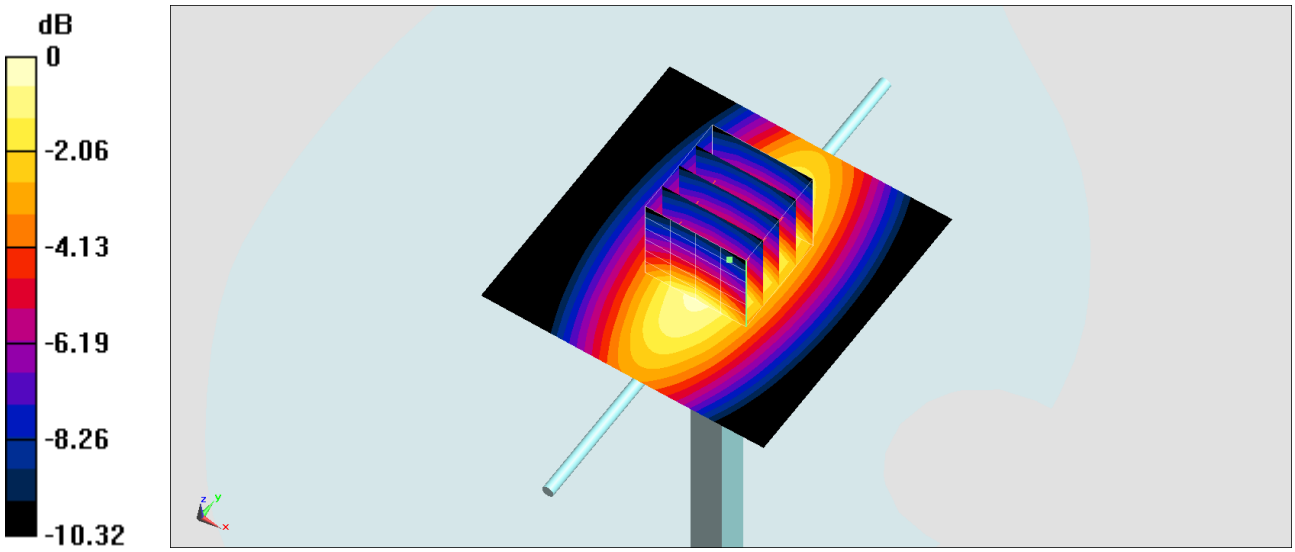

0 dB = 0.609 W/kg = -2.15 dBW/kg

System Check_Head_835MHz

DUT: D835V2-4d167

Communication System: CW; Frequency: 835 MHz;Duty Cycle: 1:1
Medium: HSL_850_201007 Medium parameters used: f = 835 MHz; σ = 0.931 S/m; ε_r = 42.291; ρ = 1000 kg/m^3
Ambient Temperature：23.3 ℃; Liquid Temperature：22.3 ℃

DASY5 Configuration:
- Probe: ES3DV3 - SN3124;ConvF(6.28, 6.28, 6.28) @ 835 MHz;Calibrated: 2019/12/18
- Sensor-Surface: 3mm (Mechanical Surface Detection)
- Electronics: DAE4 Sn316; Calibrated: 2019/12/20
- Phantom: SAM_Right; Type: QD000P40CD; Serial: TP:1815
- Measurement SW: DASY52, Version 52.10 (4);SEMCAD X Version 14.6.14 (7483)

Pin=250mW/Area Scan (61x61x1): Interpolated grid: dx=1.500 mm, dy=1.500 mm
Maximum value of SAR (interpolated) = 2.92 W/kg

Pin=250mW/Zoom Scan (5x5x7)/Cube 0: Measurement grid: dx=8mm, dy=8mm, dz=5mm
Reference Value = 59.72 V/m; Power Drift = -0.09 dB
Peak SAR (extrapolated) = 3.50 W/kg
SAR(1 g) = 2.41 W/kg; SAR(10 g) = 1.59 W/kg
Maximum value of SAR (measured) = 2.81 W/kg

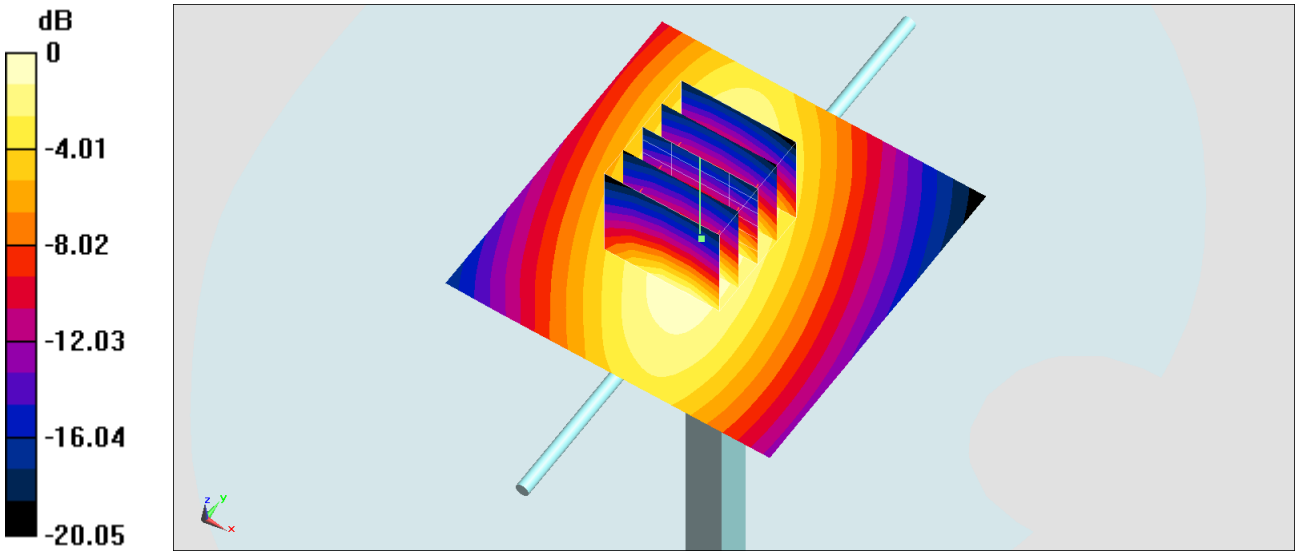

0 dB = 2.92 W/kg = 4.65 dBW/kg

System Check_Head_1750MHz

DUT: D1750V2-1112

Communication System: CW ; Frequency: 1750 MHz;Duty Cycle: 1:1
Medium: HSL_1750_200930 Medium parameters used: f = 1750 MHz; σ = 1.361 S/m; ε_r = 40.492; ρ = 1000 kg/m^3
Ambient Temperature：23.4 ℃; Liquid Temperature：22.4 ℃

DASY5 Configuration:
- Probe: EX3DV4 - SN3873; ConvF(8.17, 8.17, 8.17) @ 1750 MHz; Calibrated: 2020/8/27
- Sensor-Surface: 1.4mm (Mechanical Surface Detection)
- Electronics: DAE4 Sn778; Calibrated: 2020/6/4
- Phantom: SAM_Right; Type: SAM; Serial: TP:1446
- Measurement SW: DASY52, Version 52.10 (4);SEMCAD X Version 14.6.14 (7483)

Pin=250mW/Area Scan (61x61x1): Interpolated grid: dx=1.500 mm, dy=1.500 mm
Maximum value of SAR (interpolated) = 12.6 W/kg

Pin=250mW/Zoom Scan (5x5x7)/Cube 0: Measurement grid: dx=8mm, dy=8mm, dz=5mm
Reference Value = 96.63 V/m; Power Drift = -0.18 dB
Peak SAR (extrapolated) = 15.3 W/kg
SAR(1 g) = 9.14 W/kg; SAR(10 g) = 5.14 W/kg
Maximum value of SAR (measured) = 12.2 W/kg

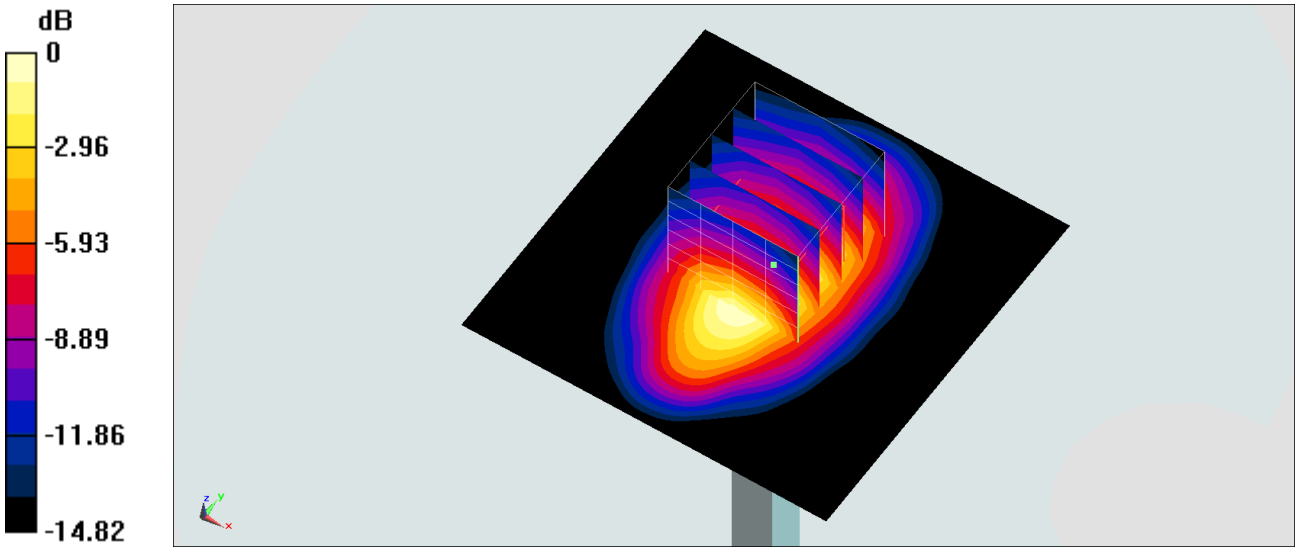

0 dB = 12.2 W/kg = 10.86 dBW/kg

System Check_Head_1750MHz

DUT: D1750V2-1112

Communication System: CW; Frequency: 1750 MHz;Duty Cycle: 1:1
Medium: HSL_1750_201001 Medium parameters used: f = 1750 MHz; σ = 1.369 S/m; ε_r = 40.623; ρ = 1000 kg/m^3
Ambient Temperature：23.5 ℃; Liquid Temperature：22.5 ℃

DASY5 Configuration:
- Probe: ES3DV3 - SN3115; ConvF(5.23, 5.23, 5.23) @ 1750 MHz; Calibrated: 2020/1/3
- Sensor-Surface: 3mm (Mechanical Surface Detection)
- Electronics: DAE4 Sn778; Calibrated: 2020/6/4
- Phantom: SAM_Right; Type: SAM; Serial: TP:1446
- Measurement SW: DASY52, Version 52.10 (4);SEMCAD X Version 14.6.14 (7483)

Pin=50mW/Area Scan (61x61x1): Interpolated grid: dx=1.500 mm, dy=1.500 mm
Maximum value of SAR (interpolated) = 2.42 W/kg

Pin=50mW/Zoom Scan (5x5x7)/Cube 0: Measurement grid: dx=8mm, dy=8mm, dz=5mm
Reference Value = 43.02 V/m; Power Drift = -0.12 dB
Peak SAR (extrapolated) = 3.25 W/kg
SAR(1 g) = 1.9 W/kg; SAR(10 g) = 1.05 W/kg
Maximum value of SAR (measured) = 2.31 W/kg

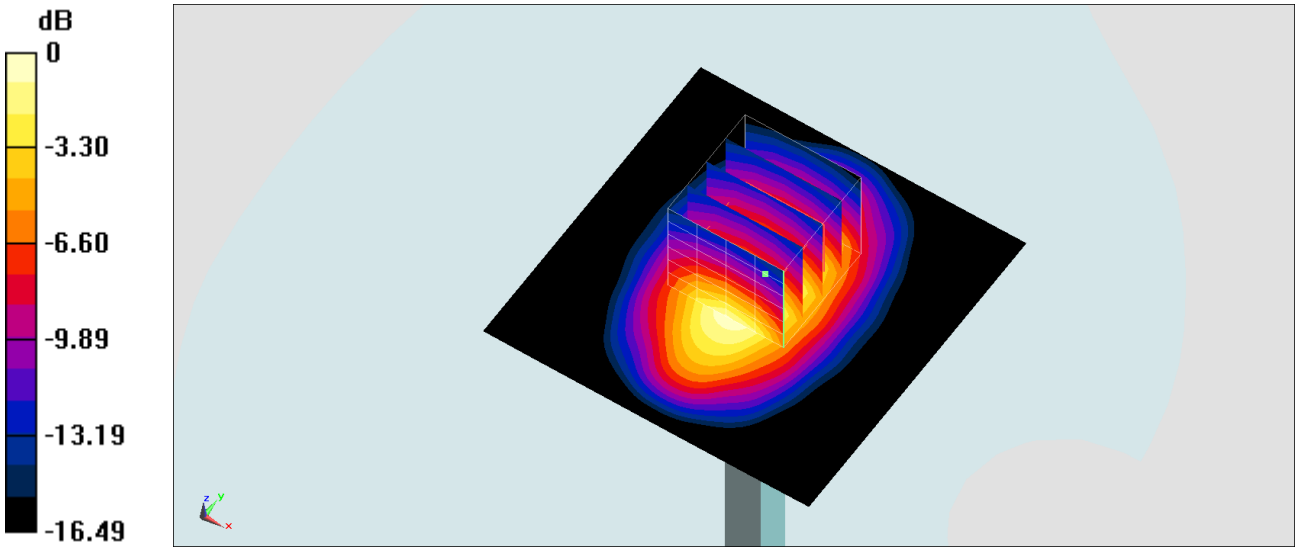

0 dB = 2.31 W/kg = 3.64 dBW/kg

System Check_Head_1750MHz

DUT: D1750V2-1112

Communication System: CW; Frequency: 1750 MHz;Duty Cycle: 1:1
Medium: HSL_1750_201008 Medium parameters used: f = 1750 MHz; σ = 1.35 S/m; ε_r = 40.022; ρ = 1000 kg/m^3
Ambient Temperature：23.5 ℃; Liquid Temperature：22.5 ℃

DASY5 Configuration:
- Probe: ES3DV3 - SN3124;ConvF(5.53, 5.53, 5.53) @ 1750 MHz;Calibrated: 2019/12/18
- Sensor-Surface: 3mm (Mechanical Surface Detection)
- Electronics: DAE4 Sn316; Calibrated: 2019/12/20
- Phantom: SAM_Right; Type: QD000P40CD; Serial: TP:1815
- Measurement SW: DASY52, Version 52.10 (4);SEMCAD X Version 14.6.14 (7483)

Pin=250mW/Area Scan (61x61x1): Interpolated grid: dx=1.500 mm, dy=1.500 mm
Maximum value of SAR (interpolated) = 11.5 W/kg

Pin=250mW/Zoom Scan (5x5x7)/Cube 0: Measurement grid: dx=8mm, dy=8mm, dz=5mm
Reference Value = 85.52 V/m; Power Drift = 0.04 dB
Peak SAR (extrapolated) = 15.4 W/kg
SAR(1 g) = 8.83 W/kg; SAR(10 g) = 4.75 W/kg
Maximum value of SAR (measured) = 10.8 W/kg

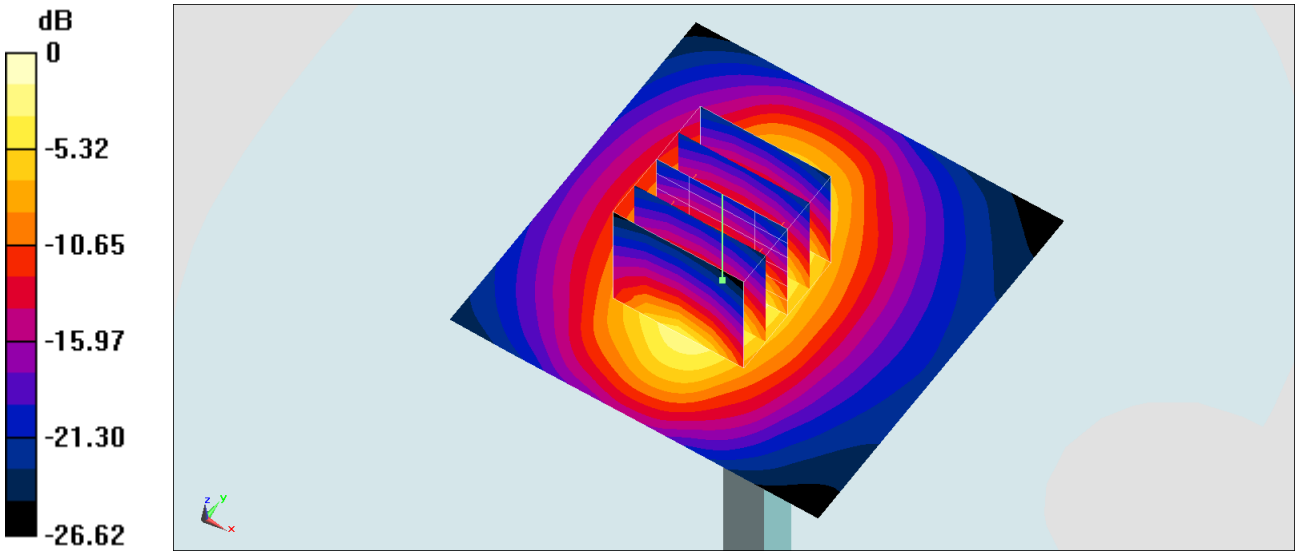

0 dB = 11.5 W/kg = 10.61 dBW/kg

System Check_Head_1900MHz

DUT: D1900V2-5d185

Communication System: CW ; Frequency: 1900 MHz;Duty Cycle: 1:1
Medium: HSL_1900_200929 Medium parameters used: f = 1900 MHz; σ = 1.389 S/m; ε_r = 40.54; ρ = 1000 kg/m^3
Ambient Temperature：23.5 ℃; Liquid Temperature：22.5 ℃

DASY5 Configuration:
- Probe: ES3DV3 - SN3115; ConvF(5.08, 5.08, 5.08) @ 1900 MHz; Calibrated: 2020/1/3
- Sensor-Surface: 3mm (Mechanical Surface Detection)
- Electronics: DAE4 Sn778; Calibrated: 2020/6/4
- Phantom: SAM_Right; Type: SAM; Serial: TP:1446
- Measurement SW: DASY52, Version 52.10 (4);SEMCAD X Version 14.6.14 (7483)

Pin=50mW/Area Scan (61x61x1): Interpolated grid: dx=1.500 mm, dy=1.500 mm
Maximum value of SAR (interpolated) = 2.63 W/kg

Pin=50mW/Zoom Scan (5x5x7)/Cube 0: Measurement grid: dx=8mm, dy=8mm, dz=5mm
Reference Value = 43.61 V/m; Power Drift = -0.16 dB
Peak SAR (extrapolated) = 3.50 W/kg
SAR(1 g) = 2.01 W/kg; SAR(10 g) = 1.08 W/kg
Maximum value of SAR (measured) = 2.49 W/kg

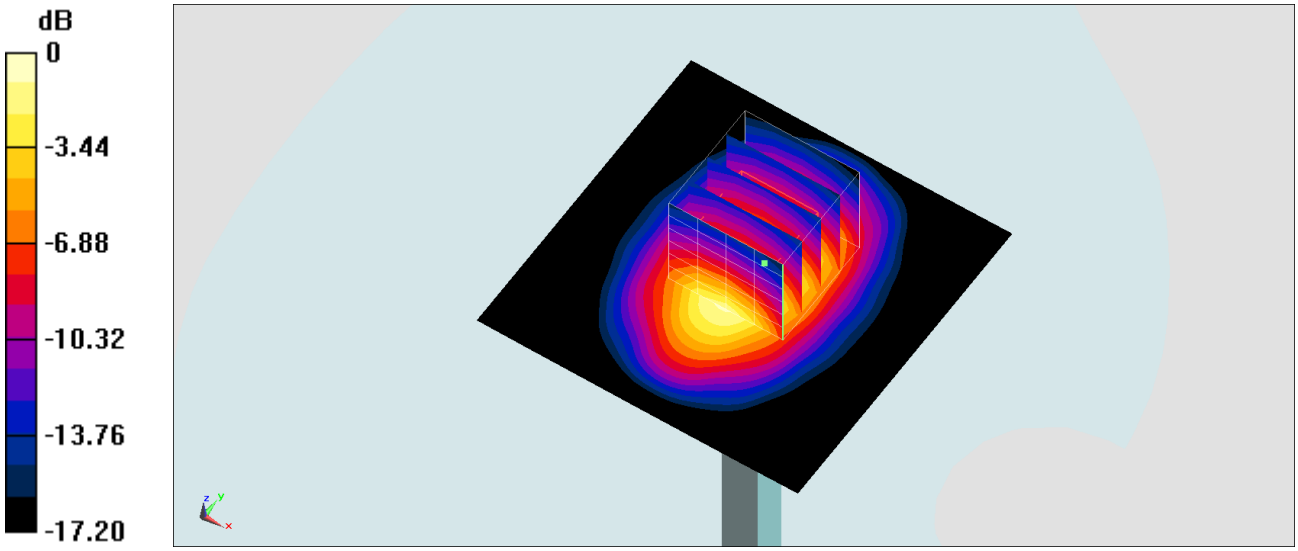

0 dB = 2.49 W/kg = 3.96 dBW/kg

System Check_Head_1900MHz

DUT: D1900V2-5d185

Communication System: CW ; Frequency: 1900 MHz;Duty Cycle: 1:1
Medium: HSL_1900_200929 Medium parameters used: f = 1900 MHz; σ = 1.389 S/m; ε_r = 40.54; ρ = 1000 kg/m^3
Ambient Temperature：23.5 ℃; Liquid Temperature：22.5 ℃

DASY5 Configuration:
- Probe: EX3DV4 - SN3873; ConvF(7.94, 7.94, 7.94) @ 1900 MHz; Calibrated: 2020/8/27
- Sensor-Surface: 1.4mm (Mechanical Surface Detection)
- Electronics: DAE4 Sn778; Calibrated: 2020/6/4
- Phantom: SAM_Right; Type: SAM; Serial: TP:1446
- Measurement SW: DASY52, Version 52.10 (4);SEMCAD X Version 14.6.14 (7483)

Pin=250mW/Area Scan (61x61x1): Interpolated grid: dx=1.500 mm, dy=1.500 mm
Maximum value of SAR (interpolated) = 15.6 W/kg

Pin=250mW/Zoom Scan (5x5x7)/Cube 0: Measurement grid: dx=8mm, dy=8mm, dz=5mm
Reference Value = 107.3 V/m; Power Drift = -0.06 dB
Peak SAR (extrapolated) = 17.9 W/kg
SAR(1 g) = 9.73 W/kg; SAR(10 g) = 5.14 W/kg
Maximum value of SAR (measured) = 14.9 W/kg

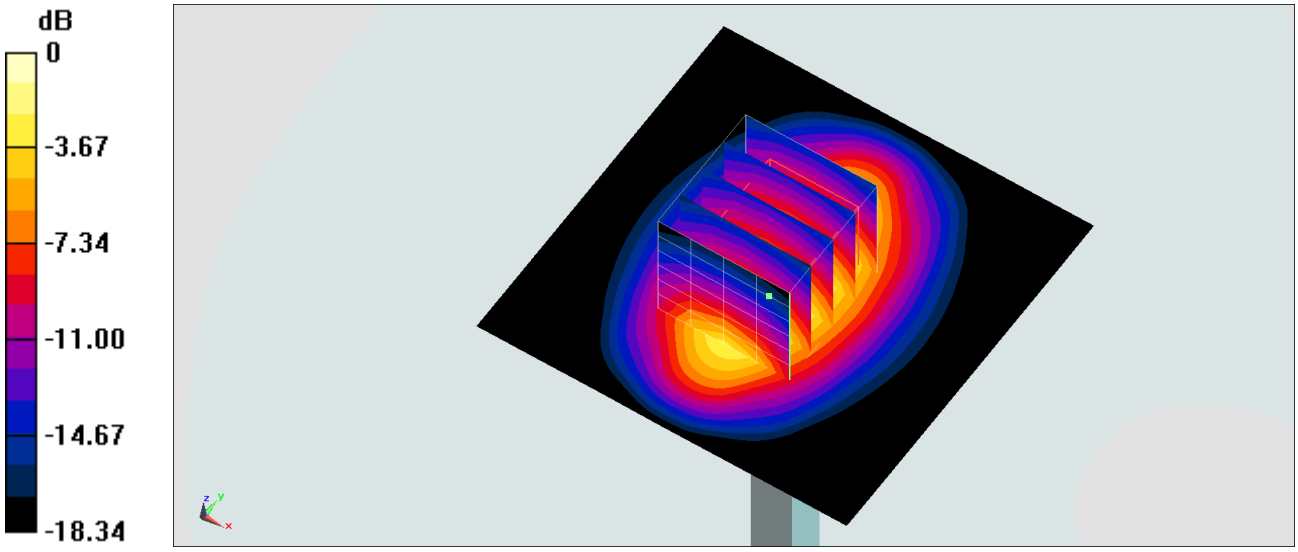

0 dB = 14.9 W/kg = 11.73 dBW/kg

System Check_Head_1900MHz

DUT: D1900V2-5d185

Communication System: CW; Frequency: 1900 MHz;Duty Cycle: 1:1
Medium: HSL_1900_201008 Medium parameters used: f = 1900 MHz; σ = 1.433 S/m; ε_r = 38.773; ρ = 1000 kg/m^3
Ambient Temperature：23.5 ℃; Liquid Temperature：22.5 ℃

DASY5 Configuration:
- Probe: ES3DV3 - SN3124;ConvF(5.31, 5.31, 5.31) @ 1900 MHz;Calibrated: 2019/12/18
- Sensor-Surface: 3mm (Mechanical Surface Detection)
- Electronics: DAE4 Sn316; Calibrated: 2019/12/20
- Phantom: SAM_Right; Type: QD000P40CD; Serial: TP:1815
- Measurement SW: DASY52, Version 52.10 (4);SEMCAD X Version 14.6.14 (7483)

Pin=250mW/Area Scan (61x61x1):Interpolated grid: dx=1.500 mm, dy=1.500 mm
Maximum value of SAR (interpolated) = 13.0 W/kg

Pin=250mW/Zoom Scan (5x5x7)/Cube 0:Measurement grid: dx=8mm, dy=8mm, dz=5mm
Reference Value = 84.40 V/m; Power Drift = 0.02 dB
Peak SAR (extrapolated) = 17.8 W/kg
SAR(1 g) = 9.74 W/kg; SAR(10 g) = 5.04 W/kg
Maximum value of SAR (measured) = 12.3 W/kg

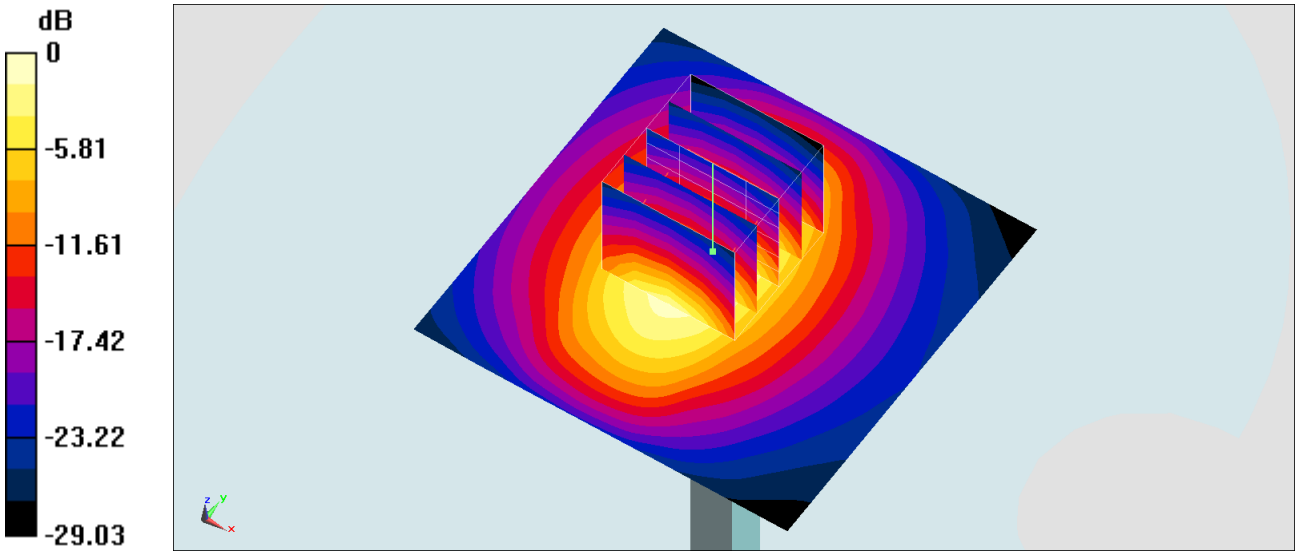

0 dB = 13.0 W/kg = 11.14 dBW/kg

System Check_Head_2450MHz

DUT: D2450V2-736

Communication System: CW; Frequency: 2450 MHz;Duty Cycle: 1:1
Medium: HSL_2450_200831 Medium parameters used : f = 2450 MHz; σ = 1.827 S/m; ε_r = 39.764; ρ = 1000 kg/m^3
Ambient Temperature：23.4 ℃; Liquid Temperature：22.4 ℃

DASY5 Configuration:
- Probe: ES3DV3 - SN3124; ConvF(4.64, 4.64, 4.64) @ 2450 MHz; Calibrated: 2019/12/18
- Sensor-Surface: 3mm (Mechanical Surface Detection)
- Electronics: DAE4 Sn316; Calibrated: 2019/12/20
- Phantom: SAM_Right; Type: QD000P40CD; Serial: TP:1815
- Measurement SW: DASY52, Version 52.10 (4);SEMCAD X Version 14.6.14 (7483)

Pin=250mW/Area Scan (71x71x1): Interpolated grid: dx=1.200 mm, dy=1.200 mm
Maximum value of SAR (interpolated) = 17.3 W/kg

Pin=250mW/Zoom Scan (7x7x7)/Cube 0: Measurement grid: dx=5mm, dy=5mm, dz=5mm
Reference Value = 96.48 V/m; Power Drift = 0.07 dB
Peak SAR (extrapolated) = 26.6 W/kg
SAR(1 g) = 12.8 W/kg; SAR(10 g) = 5.87 W/kg
Maximum value of SAR (measured) = 17.1 W/kg

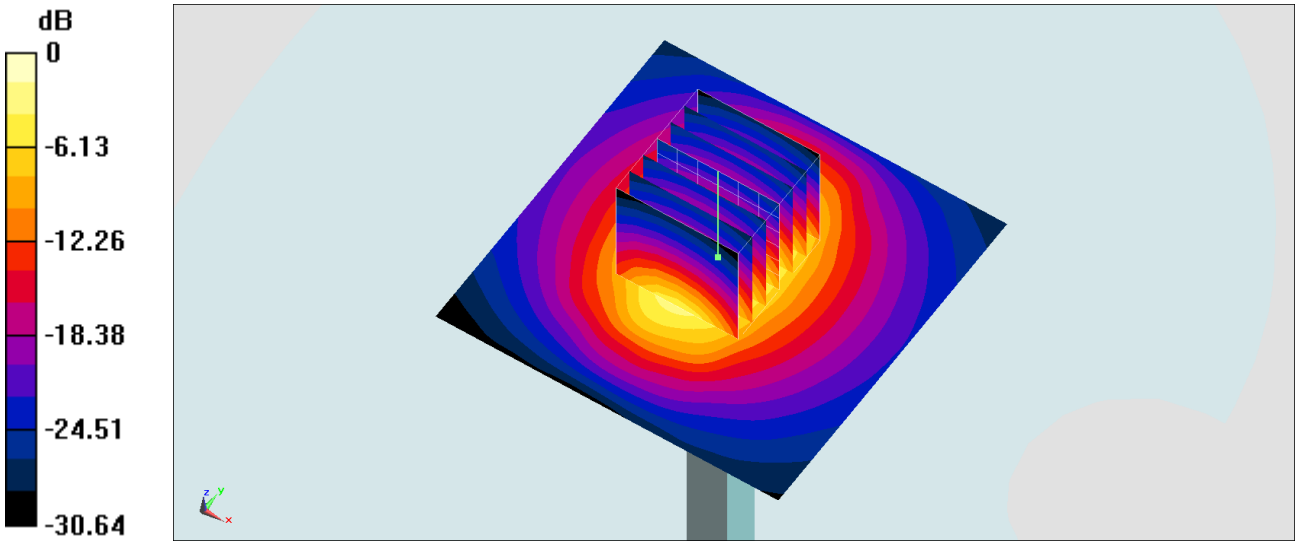

0 dB = 17.3 W/kg = 12.38 dBW/kg

System Check_Head_2450MHz

DUT: D2450V2-929

Communication System: CW ; Frequency: 2450 MHz;Duty Cycle: 1:1
Medium: HSL_2450_201015 Medium parameters used : f = 2450 MHz; σ = 1.8 S/m; ε_r = 39.388; ρ = 1000 kg/m^3
Ambient Temperature：23.4 ℃; Liquid Temperature：22.4 ℃

DASY5 Configuration:
- Probe: EX3DV4 - SN3753; ConvF(7.12, 7.12, 7.12) @ 2450 MHz; Calibrated: 2020/6/25
- Sensor-Surface: 1.4mm (Mechanical Surface Detection)
- Electronics: DAE4 Sn854; Calibrated: 2020/5/26
- Phantom: SAM_Right; Type: SAM; Serial: TP:1446
- Measurement SW: DASY52, Version 52.10 (4);SEMCAD X Version 14.6.14 (7483)

Pin=250mW/Area Scan (71x71x1): Interpolated grid: dx=1.200 mm, dy=1.200 mm
Maximum value of SAR (interpolated) = 21.7 W/kg

Pin=250mW/Zoom Scan (7x7x7)/Cube 0: Measurement grid: dx=5mm, dy=5mm, dz=5mm
Reference Value = 114.4 V/m; Power Drift = -0.04 dB
Peak SAR (extrapolated) = 25.8 W/kg
SAR(1 g) = 12.9 W/kg; SAR(10 g) = 6.04 W/kg
Maximum value of SAR (measured) = 21.3 W/kg

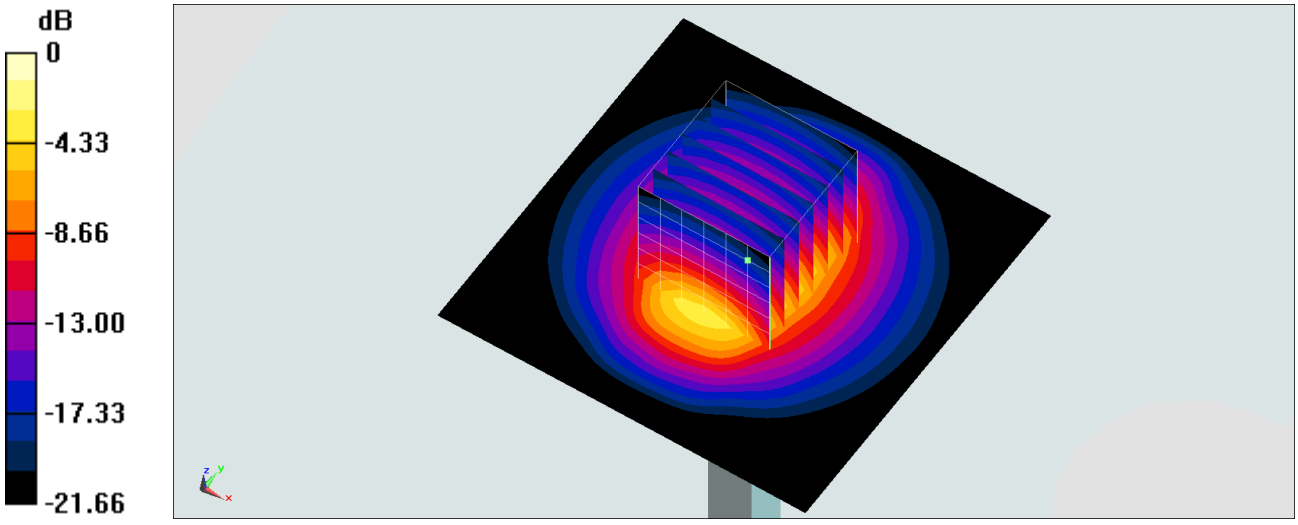

0 dB = 21.3 W/kg = 13.28 dBW/kg

System Check_Head_2600MHz

DUT: D2600V2-1078

Communication System: CW; Frequency: 2600 MHz;Duty Cycle: 1:1
Medium: HSL_2600_200930 Medium parameters used: f = 2600 MHz; σ = 1.968 S/m; ε_r = 38.01; ρ = 1000 kg/m^3
Ambient Temperature：23.4 ℃; Liquid Temperature：22.4 ℃

DASY5 Configuration:
- Probe: ES3DV3 - SN3115; ConvF(4.44, 4.44, 4.44) @ 2600 MHz; Calibrated: 2020/1/3
- Sensor-Surface: 3mm (Mechanical Surface Detection)
- Electronics: DAE4 Sn778; Calibrated: 2020/6/4
- Phantom: SAM_Right; Type: SAM; Serial: TP:1446
- Measurement SW: DASY52, Version 52.10 (4);SEMCAD X Version 14.6.14 (7483)

Pin=50mW/Area Scan (71x71x1): Interpolated grid: dx=1.200 mm, dy=1.200 mm
Maximum value of SAR (interpolated) = 4.14 W/kg

Pin=50mW/Zoom Scan (7x7x7)/Cube 0: Measurement grid: dx=5mm, dy=5mm, dz=5mm
Reference Value = 44.86 V/m; Power Drift = -0.05 dB
Peak SAR (extrapolated) = 5.92 W/kg
SAR(1 g) = 2.96 W/kg; SAR(10 g) = 1.4 W/kg
Maximum value of SAR (measured) = 3.85 W/kg

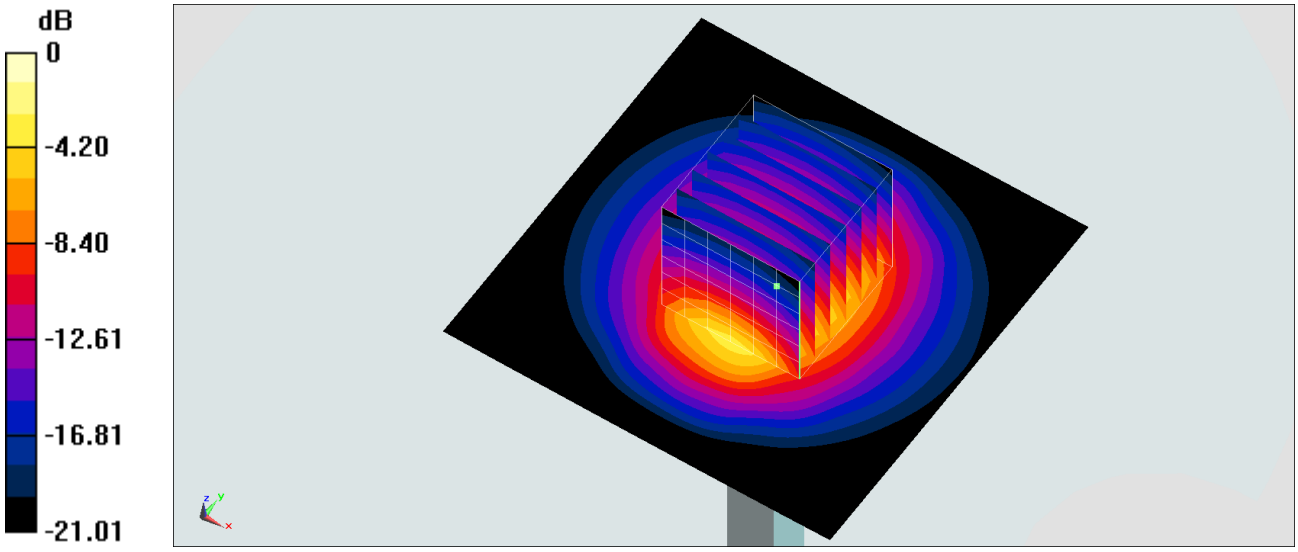

0 dB = 3.85 W/kg = 5.85 dBW/kg

System Check_Head_2600MHz

DUT: D2600V2-1078

Communication System: CW; Frequency: 2600 MHz;Duty Cycle: 1:1
Medium: HSL_2600_201001 Medium parameters used: f = 2600 MHz; σ = 1.984 S/m; ε_r = 38.231; ρ = 1000 kg/m^3
Ambient Temperature：23.6 ℃; Liquid Temperature：22.6 ℃

DASY5 Configuration:
- Probe: ES3DV3 - SN3124; ConvF(4.46, 4.46, 4.46) @ 2600 MHz; Calibrated: 2019/12/18
- Sensor-Surface: 3mm (Mechanical Surface Detection)
- Electronics: DAE4 Sn316; Calibrated: 2019/12/20
- Phantom: SAM_Right; Type: QD000P40CD; Serial: TP:1815
- Measurement SW: DASY52, Version 52.10 (4);SEMCAD X Version 14.6.14 (7483)

Pin=250mW/Area Scan (61x61x1): Interpolated grid: dx=1.500 mm, dy=1.500 mm
Maximum value of SAR (interpolated) = 18.9 W/kg

Pin=250mW/Zoom Scan (5x5x7)/Cube 0: Measurement grid: dx=8mm, dy=8mm, dz=5mm
Reference Value = 92.71 V/m; Power Drift = 0.07 dB
Peak SAR (extrapolated) = 28.4 W/kg
SAR(1 g) = 13.3 W/kg; SAR(10 g) = 5.92 W/kg
Maximum value of SAR (measured) = 16.7 W/kg

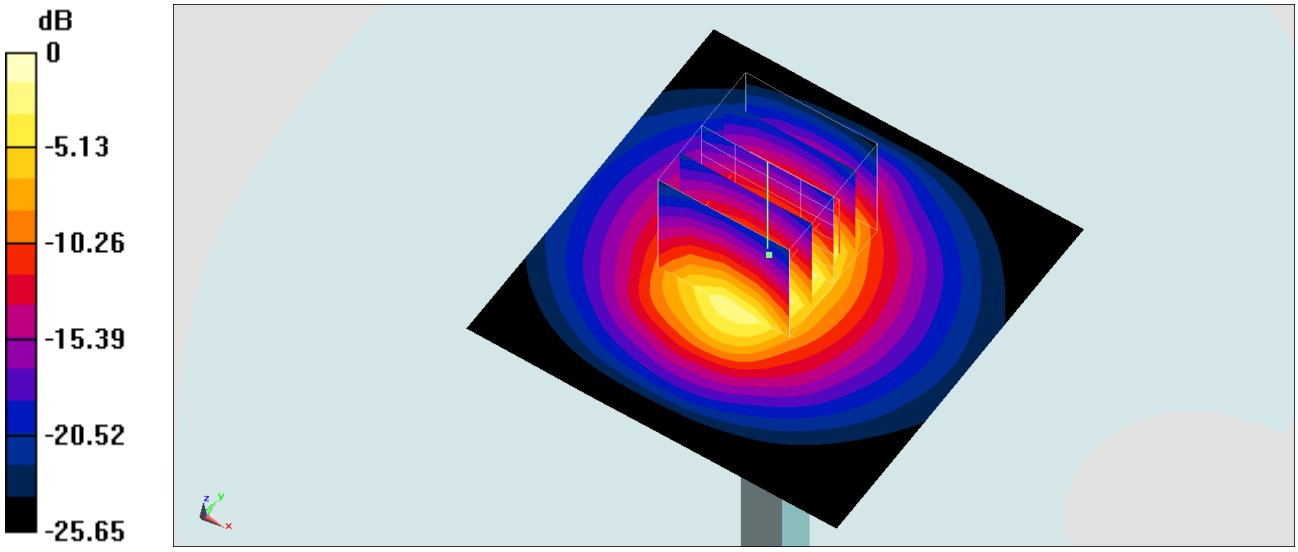

0 dB = 16.7 W/kg = 12.23 dBW/kg

System Check_Head_2600MHz

DUT: D2600V2-1078

Communication System: CW; Frequency: 2600 MHz;Duty Cycle: 1:1
Medium: HSL_2600_201008 Medium parameters used: f = 2600 MHz; σ = 2.021 S/m; ε_r = 40.188; ρ = 1000 kg/m^3
Ambient Temperature：23.5 ℃; Liquid Temperature：22.5 ℃

DASY5 Configuration:
- Probe: ES3DV3 - SN3124;ConvF(4.46, 4.46, 4.46) @ 2600 MHz;Calibrated: 2019/12/18
- Sensor-Surface: 3mm (Mechanical Surface Detection)
- Electronics: DAE4 Sn316; Calibrated: 2019/12/20
- Phantom: SAM_Right; Type: QD000P40CD; Serial: TP:1815
- Measurement SW: DASY52, Version 52.10 (4);SEMCAD X Version 14.6.14 (7483)

Pin=250mW/Ar ea Scan (61x61x1):Interpolated grid: dx=1.500 mm, dy=1.500 mm
Maximum value of SAR (interpolated) = 19.3 W/kg

Pin=250mW/Zoom Scan (5x5x7)/Cube 0:Measurement grid: dx=8mm, dy=8mm, dz=5mm
Reference Value = 92.71 V/m; Power Drift = 0.07 dB
Peak SAR (extrapolated) = 29.0 W/kg
SAR(1 g) = 13.6 W/kg; SAR(10 g) = 6.03 W/kg
Maximum value of SAR (measured) = 17.1 W/kg

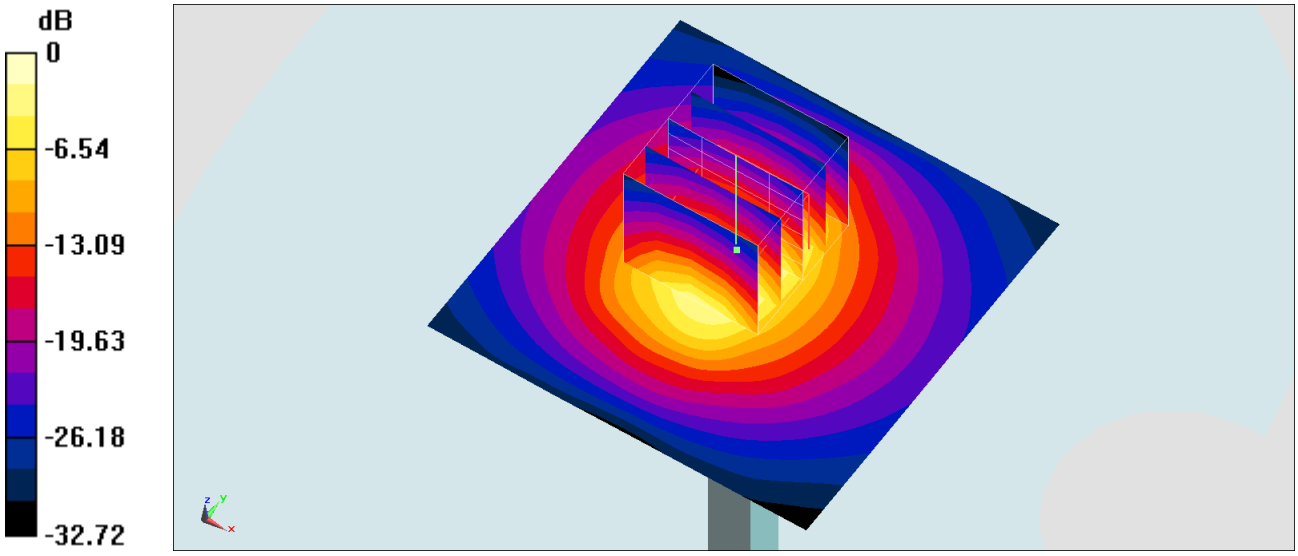

0 dB = 19.3 W/kg = 12.86 dBW/kg

System Check_Head_5250MHz

DUT: D5GHzV2-1128

Communication System: CW; Frequency: 5250 MHz;Duty Cycle: 1:1
Medium: HSL_5G_200826 Medium parameters used : f = 5250 MHz; σ = 4.641 S/m; ε_r = 35.942; ρ = 1000 kg/m^3
Ambient Temperature：23.7 ℃; Liquid Temperature：22.7 ℃

DASY5 Configuration
- Probe: EX3DV4 - SN7306; ConvF(5.36, 5.36, 5.36) @ 5250 MHz; Calibrated: 2020/7/24
- Sensor-Surface: 1.4mm (Mechanical Surface Detection)
- Electronics: DAE3 Sn495; Calibrated: 2020/7/21
- Phantom: SAM LEFT; Type: QD000P40CD; Serial: TP:1718
- Measurement SW: DASY52, Version 52.10 (4); SEMCAD X Version 14.6.14 (7483)

Pin=100mW/Area Scan (71x71x1): Interpolated grid: dx=1.000 mm, dy=1.000 mm
Maximum value of SAR (interpolated) = 17.8 W/kg

Pin=100mW/Zoom Scan (7x7x7)/Cube 0: Measurement grid: dx=4mm, dy=4mm, dz=1.4mm
Reference Value = 69.34 V/m; Power Drift = 0.11 dB
Peak SAR (extrapolated) = 30.7 W/kg
SAR(1 g) = 7.62 W/kg; SAR(10 g) = 2.17 W/kg
Maximum value of SAR (measured) = 19.2 W/kg

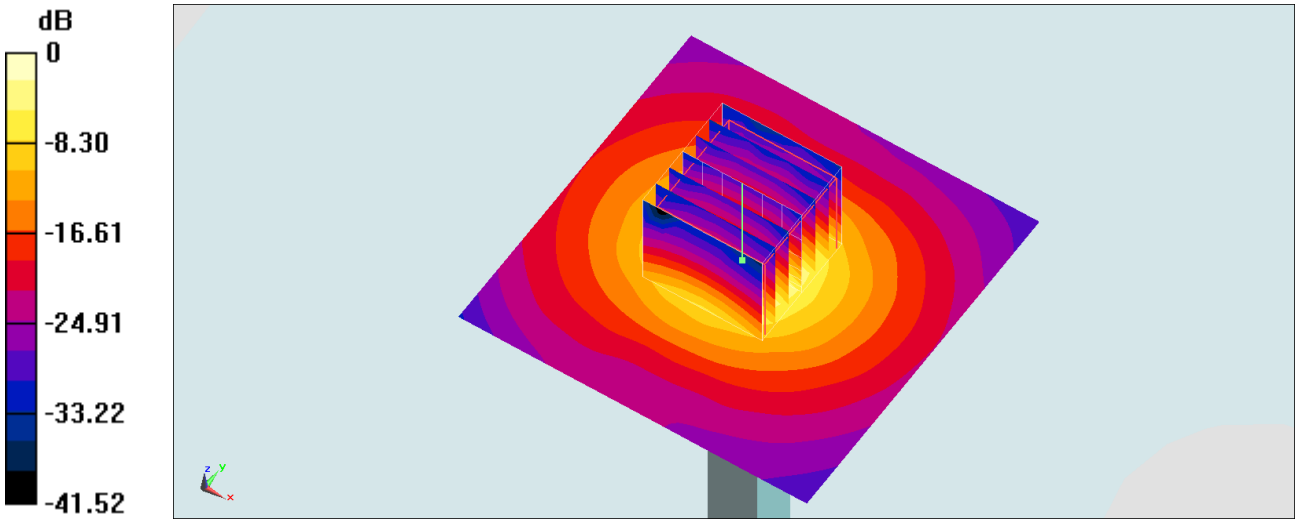

0 dB = 19.2 W/kg = 12.83 dBW/kg

System Check_Head_5250MHz

DUT: D5GHzV2-1128

Communication System: CW; Frequency: 5250 MHz;Duty Cycle: 1:1
Medium: HSL_5G_200830 Medium parameters used : f = 5250 MHz; σ = 4.508 S/m; ε_r = 36.727; ρ = 1000 kg/m^3
Ambient Temperature：23.7 ℃; Liquid Temperature：22.7 ℃

DASY5 Configuration
- Probe: EX3DV4 - SN7306; ConvF(5.36, 5.36, 5.36) @ 5250 MHz; Calibrated: 2020/7/24
- Sensor-Surface: 1.4mm (Mechanical Surface Detection)
- Electronics: DAE3 Sn495; Calibrated: 2020/7/21
- Phantom: SAM LEFT; Type: QD000P40CD; Serial: TP:1718
- Measurement SW: DASY52, Version 52.10 (4); SEMCAD X Version 14.6.14 (7483)

Pin=100mW/Area Scan (71x71x1): Interpolated grid: dx=1.000 mm, dy=1.000 mm
Maximum value of SAR (interpolated) = 18.7 W/kg

Pin=100mW/Zoom Scan (7x7x7)/Cube 0: Measurement grid: dx=4mm, dy=4mm, dz=1.4mm
Reference Value = 71.43 V/m; Power Drift = -0.18 dB
Peak SAR (extrapolated) = 29.8 W/kg
SAR(1 g) = 7.48 W/kg; SAR(10 g) = 2.17 W/kg
Maximum value of SAR (measured) = 18.6 W/kg

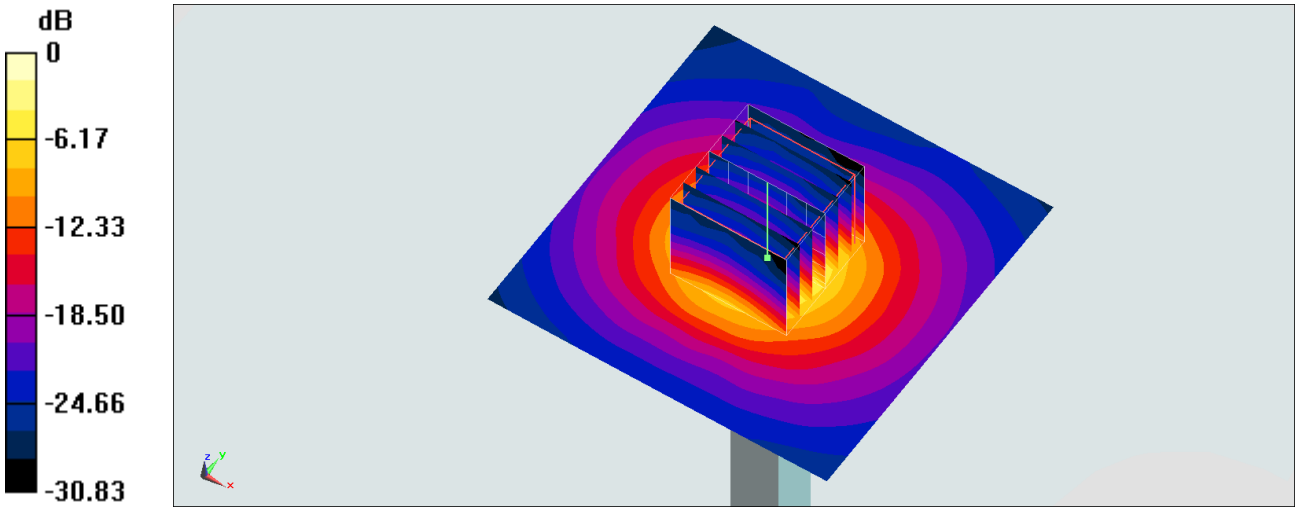

0 dB = 18.6 W/kg = 12.70 dBW/kg

System Check_Head_5600MHz

DUT: D5GHzV2-1128

Communication System: CW; Frequency: 5600 MHz;Duty Cycle: 1:1
Medium: HSL_5G_200826 Medium parameters used: f = 5600 MHz; σ = 4.998 S/m; ε_r = 35.497; ρ = 1000 kg/m^3
Ambient Temperature：23.7 ℃; Liquid Temperature：22.7 ℃

DASY5 Configuration
- Probe: EX3DV4 - SN7306; ConvF(4.68, 4.68, 4.68) @ 5600 MHz; Calibrated: 2020/7/24
- Sensor-Surface: 1.4mm (Mechanical Surface Detection)
- Electronics: DAE3 Sn495; Calibrated: 2020/7/21
- Phantom: SAM LEFT; Type: QD000P40CD; Serial: TP:1718
- Measurement SW: DASY52, Version 52.10 (4); SEMCAD X Version 14.6.14 (7483)

Pin=100mW/Area Scan (71x71x1): Interpolated grid: dx=1.000 mm, dy=1.000 mm
Maximum value of SAR (interpolated) = 22.6 W/kg

Pin=100mW/Zoom Scan (7x7x7)/Cube 0: Measurement grid: dx=4mm, dy=4mm, dz=1.4mm
Reference Value = 75.13 V/m; Power Drift = -0.11 dB
Peak SAR (extrapolated) = 38.3 W/kg
SAR(1 g) = 8.65 W/kg; SAR(10 g) = 2.38 W/kg
Maximum value of SAR (measured) = 22.7 W/kg

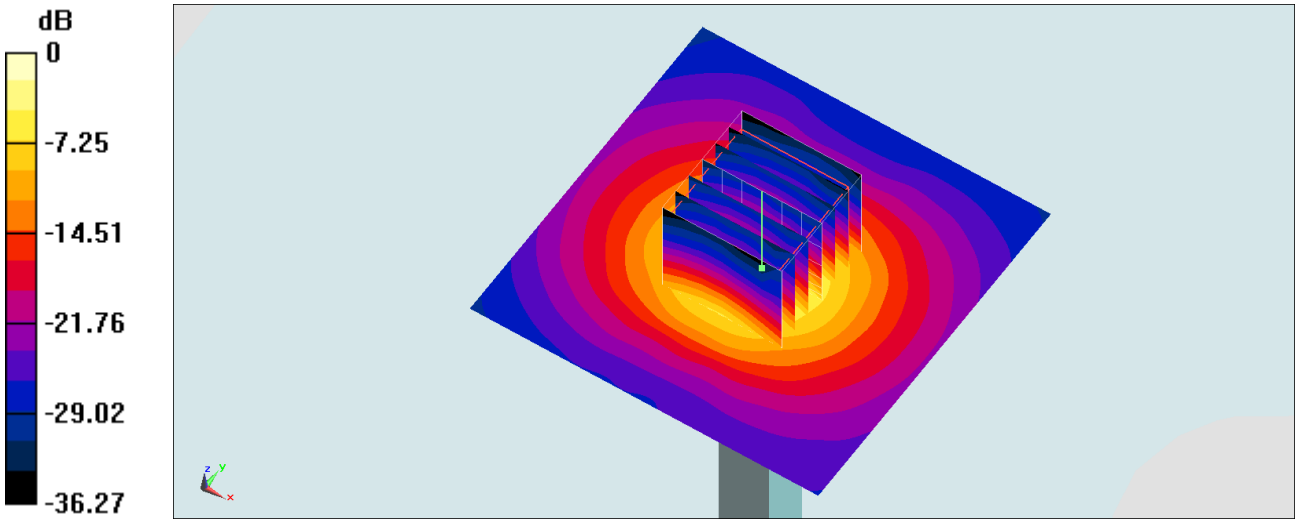

0 dB = 22.7 W/kg = 13.56 dBW/kg

System Check_Head_5600MHz

DUT: D5GHzV2-1128

Communication System: CW ; Frequency: 5600 MHz;Duty Cycle: 1:1
Medium: HSL_5G_200830 Medium parameters used: f = 5600 MHz; σ = 4.873 S/m; ε_r = 36.242; ρ = 1000 kg/m^3
Ambient Temperature：23.7 ℃; Liquid Temperature：22.7 ℃

DASY5 Configuration
- Probe: EX3DV4 - SN7306; ConvF(4.68, 4.68, 4.68) @ 5600 MHz; Calibrated: 2020/7/24
- Sensor-Surface: 1.4mm (Mechanical Surface Detection)
- Electronics: DAE3 Sn495; Calibrated: 2020/7/21
- Phantom: SAM LEFT; Type: QD000P40CD; Serial: TP:1718
- Measurement SW: DASY52, Version 52.10 (4); SEMCAD X Version 14.6.14 (7483)

Pin=100mW/Area Scan (71x71x1): Interpolated grid: dx=1.000 mm, dy=1.000 mm
Maximum value of SAR (interpolated) = 22.6 W/kg

Pin=100mW/Zoom Scan (7x7x7)/Cube 0: Measurement grid: dx=4mm, dy=4mm, dz=1.4mm
Reference Value = 74.17 V/m; Power Drift = -0.08 dB
Peak SAR (extrapolated) = 35.7 W/kg
SAR(1 g) = 8.37 W/kg; SAR(10 g) = 2.34 W/kg
Maximum value of SAR (measured) = 21.8 W/kg

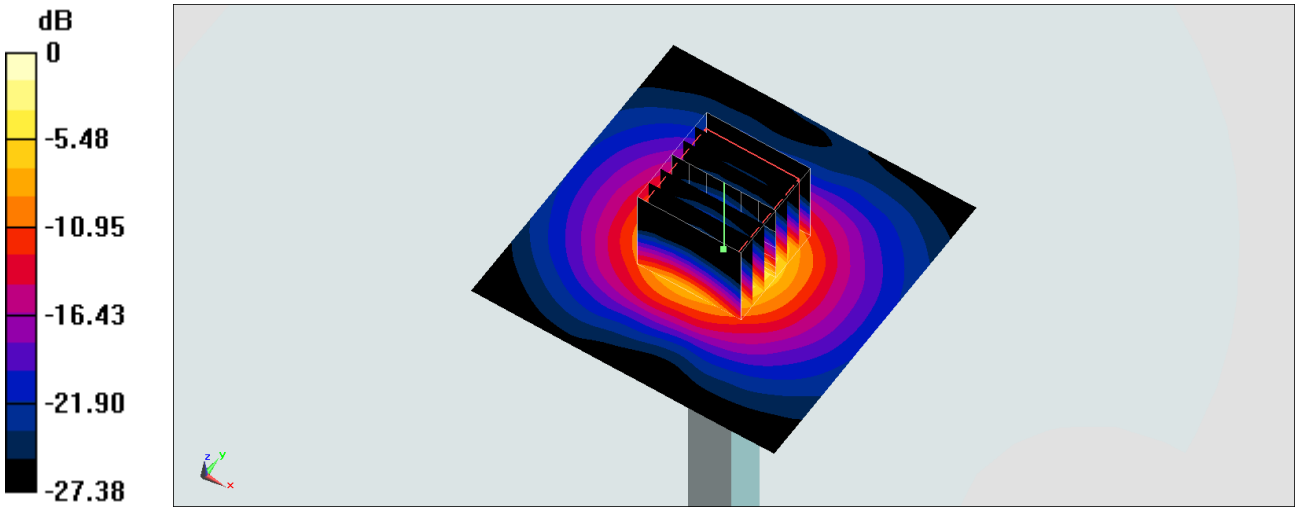

0 dB = 21.8 W/kg = 13.38 dBW/kg

System Check_Head_5750MHz

DUT: D5GHzV2-1128

Communication System: CW; Frequency: 5750 MHz;Duty Cycle: 1:1
Medium: HSL_5G_200826 Medium parameters used: f = 5750 MHz; σ = 5.184 S/m; ε_r = 35.281; ρ = 1000 kg/m^3
Ambient Temperature：23.7 ℃; Liquid Temperature：22.7 ℃

DASY5 Configuration
- Probe: EX3DV4 - SN7306; ConvF(4.91, 4.91, 4.91) @ 5750 MHz; Calibrated: 2020/7/24
- Sensor-Surface: 1.4mm (Mechanical Surface Detection)
- Electronics: DAE3 Sn495; Calibrated: 2020/7/21
- Phantom: SAM LEFT; Type: QD000P40CD; Serial: TP:1718
- Measurement SW: DASY52, Version 52.10 (4); SEMCAD X Version 14.6.14 (7483)

Pin=100mW/Area Scan (71x71x1): Interpolated grid: dx=1.000 mm, dy=1.000 mm
Maximum value of SAR (interpolated) = 19.5 W/kg

Pin=100mW/Zoom Scan (7x7x7)/Cube 0: Measurement grid: dx=4mm, dy=4mm, dz=1.4mm
Reference Value = 69.68 V/m; Power Drift = -0.07 dB
Peak SAR (extrapolated) = 39.0 W/kg
SAR(1 g) = 7.85 W/kg; SAR(10 g) = 2.24 W/kg
Maximum value of SAR (measured) = 20.9 W/kg

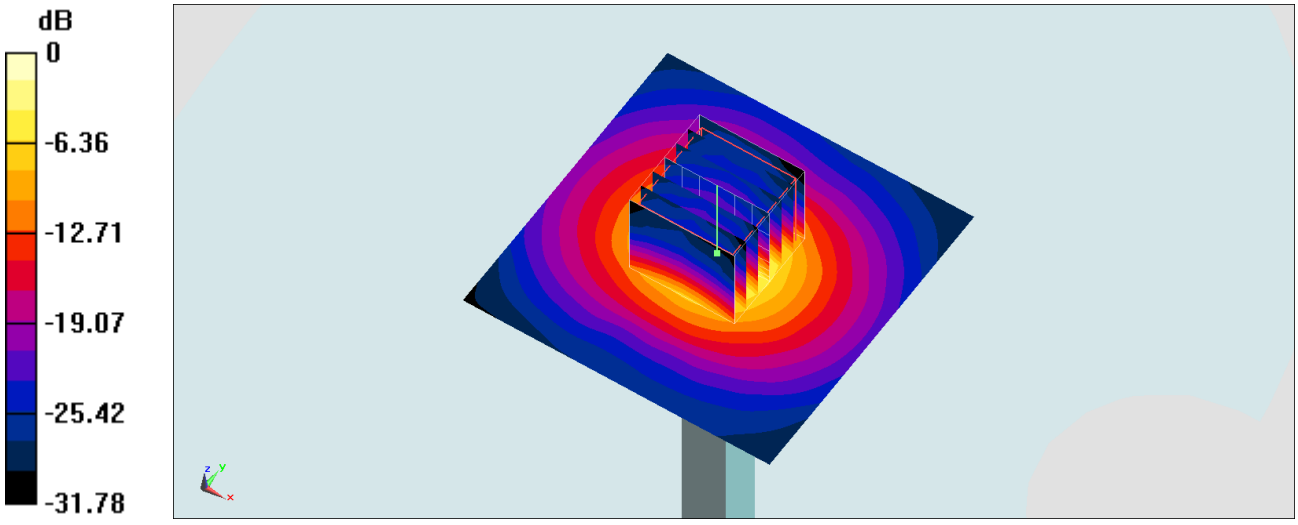

0 dB = 20.9 W/kg = 13.20 dBW/kg

System Check_Head_5750MHz

DUT: D5GHzV2-1128

Communication System: CW; Frequency: 5750 MHz;Duty Cycle: 1:1
Medium: HSL_5G_200831 Medium parameters used: f = 5750 MHz; σ = 5.131 S/m; ε_r = 36.068; ρ = 1000 kg/m^3
Ambient Temperature：23.4 ℃; Liquid Temperature：22.4 ℃

DASY5 Configuration
- Probe: EX3DV4 - SN7306; ConvF(4.91, 4.91, 4.91) @ 5750 MHz; Calibrated: 2020/7/24
- Sensor-Surface: 1.4mm (Mechanical Surface Detection)
- Electronics: DAE3 Sn495; Calibrated: 2020/7/21
- Phantom: SAM LEFT; Type: QD000P40CD; Serial: TP:1718
- Measurement SW: DASY52, Version 52.10 (4); SEMCAD X Version 14.6.14 (7483)

Pin=100mW/Area Scan (71x71x1): Interpolated grid: dx=1.000 mm, dy=1.000 mm
Maximum value of SAR (interpolated) = 18.8 W/kg

Pin=100mW/Zoom Scan (7x7x7)/Cube 0: Measurement grid: dx=4mm, dy=4mm, dz=1.4mm
Reference Value = 66.85 V/m; Power Drift = -0.13 dB
Peak SAR (extrapolated) = 35.0 W/kg
SAR(1 g) = 7.52 W/kg; SAR(10 g) = 2.11 W/kg
Maximum value of SAR (measured) = 20.2 W/kg

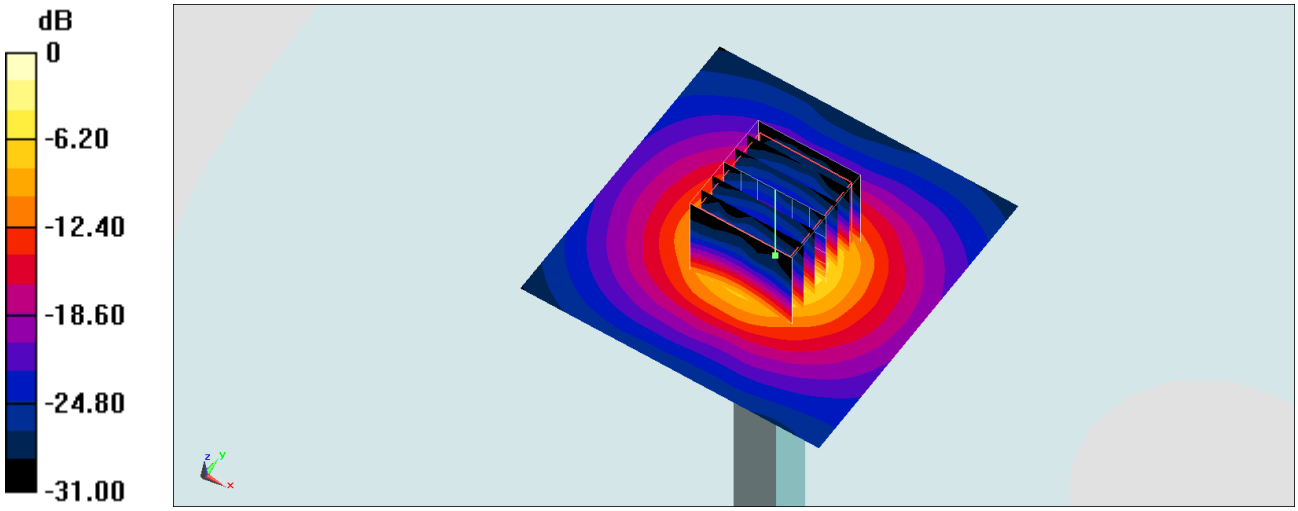

0 dB = 20.2 W/kg = 13.05 dBW/kg