System Check_Head_750MHz

DUT: D750V3-1107

Communication System: CW; Frequency: 750 MHz;Duty Cycle: 1:1
Medium: HSL_750_200928 Medium parameters used: f = 750 MHz; σ = 0.898 S/m; ε_r = 42.908; ρ = 1000 kg/m^3
Ambient Temperature：23.3 ℃; Liquid Temperature：22.3 ℃

DASY5 Configuration:
- Probe: ES3DV3 - SN3124; ConvF(6.47, 6.47, 6.47) @ 750 MHz; Calibrated: 2019/12/18
- Sensor-Surface: 3mm (Mechanical Surface Detection)
- Electronics: DAE4 Sn316; Calibrated: 2019/12/20
- Phantom: SAM_Right; Type: QD000P40CD; Serial: TP:1815
- Measurement SW: DASY52, Version 52.10 (4);SEMCAD X Version 14.6.14 (7483)

Pin=250mW/Area Scan (61x61x1): Interpolated grid: dx=1.500 mm, dy=1.500 mm
Maximum value of SAR (interpolated) = 2.44 W/kg

Pin=250mW/Zoom Scan (5x5x7)/Cube 0: Measurement grid: dx=8mm, dy=8mm, dz=5mm
Reference Value = 53.83 V/m; Power Drift = -0.17 dB
Peak SAR (extrapolated) = 2.91 W/kg
SAR(1 g) = 2.05 W/kg; SAR(10 g) = 1.38 W/kg
Maximum value of SAR (measured) = 2.37 W/kg

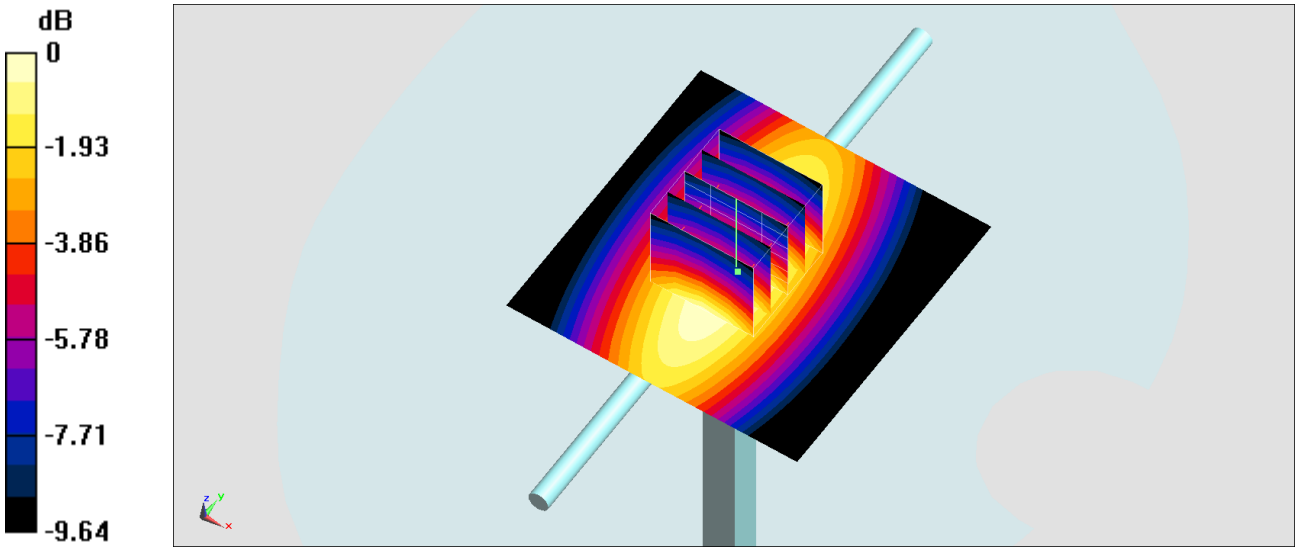

0 dB = 2.37 W/kg = 3.75 dBW/kg

System Check_Head_750MHz

DUT: D750V3-1107

Communication System: CW; Frequency: 750 MHz;Duty Cycle: 1:1
Medium: HSL_750_201007 Medium parameters used: f = 750 MHz; σ = 0.896 S/m; ε_r = 42.906; ρ = 1000 kg/m^3
Ambient Temperature：23.3 ℃; Liquid Temperature：22.3 ℃

DASY5 Configuration:
- Probe: ES3DV3 - SN3124;ConvF(6.47, 6.47, 6.47) @ 750 MHz;Calibrated: 2019/12/18
- Sensor-Surface: 3mm (Mechanical Surface Detection)
- Electronics: DAE4 Sn316; Calibrated: 2019/12/20
- Phantom: SAM_Right; Type: QD000P40CD; Serial: TP:1815
- Measurement SW: DASY52, Version 52.10 (4);SEMCAD X Version 14.6.14 (7483)

Pin=250mW/Ar ea Scan (61x61x1): Interpolated grid: dx=1.500 mm, dy=1.500 mm
Maximum value of SAR (interpolated) = 2.44 W/kg

Pin=250mW/Zoom Scan (5x5x7)/Cube 0: Measurement grid: dx=8mm, dy=8mm, dz=5mm
Reference Value = 53.83 V/m; Power Drift = -0.07 dB
Peak SAR (extrapolated) = 2.91 W/kg
SAR(1 g) = 2.05 W/kg; SAR(10 g) = 1.38 W/kg
Maximum value of SAR (measured) = 2.37 W/kg

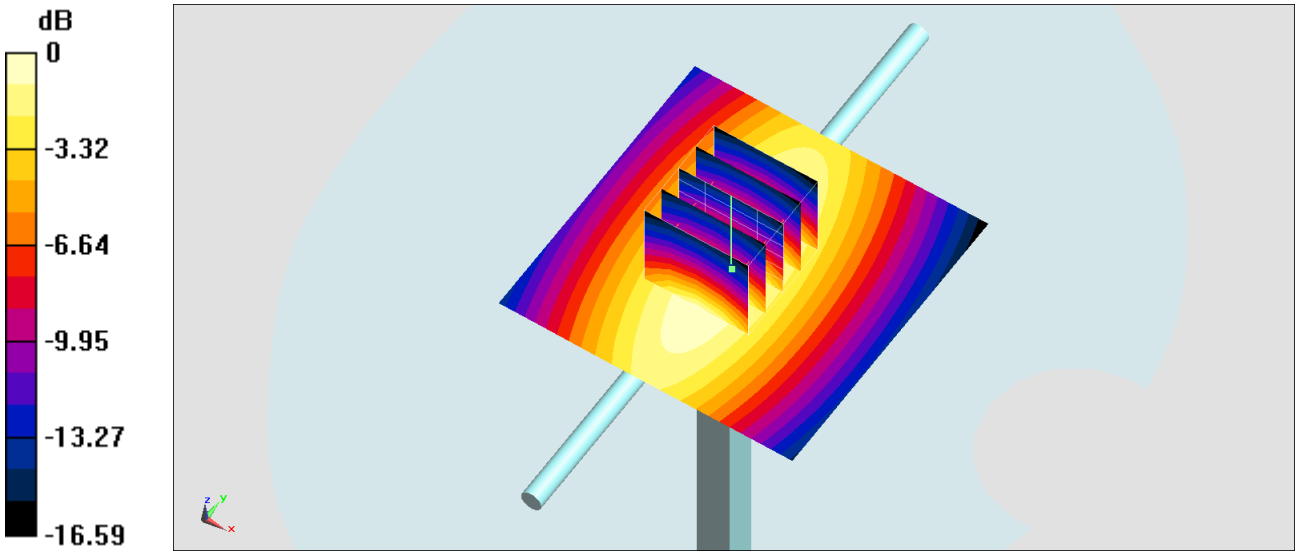

0 dB = 2.44 W/kg = 3.87 dBW/kg

System Check_Head_835MHz

DUT: D835V2-4d167

Communication System: CW; Frequency: 835 MHz;Duty Cycle: 1:1
Medium: HSL_850_200929 Medium parameters used: f = 835 MHz; σ = 0.871 S/m; ε_r = 40.832; ρ = 1000 kg/m^3
Ambient Temperature：23.3 ℃; Liquid Temperature：22.3 ℃

DASY5 Configuration:
- Probe: ES3DV3 - SN3124;ConvF(6.28, 6.28, 6.28) @ 835 MHz;Calibrated: 2019/12/18
- Sensor-Surface: 3mm (Mechanical Surface Detection)
- Electronics: DAE4 Sn316; Calibrated: 2019/12/20
- Phantom: SAM_Right; Type: QD000P40CD; Serial: TP:1815
- Measurement SW: DASY52, Version 52.10 (4);SEMCAD X Version 14.6.14 (7483)

Pin=250mW/Area Scan (61x61x1): Interpolated grid: dx=1.500 mm, dy=1.500 mm
Maximum value of SAR (interpolated) = 2.73 W/kg

Pin=250mW/Zoom Scan (5x5x7)/Cube 0: Measurement grid: dx=8mm, dy=8mm, dz=5mm
Reference Value = 59.72 V/m; Power Drift = -0.09 dB
Peak SAR (extrapolated) = 3.28 W/kg
SAR(1 g) = 2.26 W/kg; SAR(10 g) = 1.49 W/kg
Maximum value of SAR (measured) = 2.63 W/kg

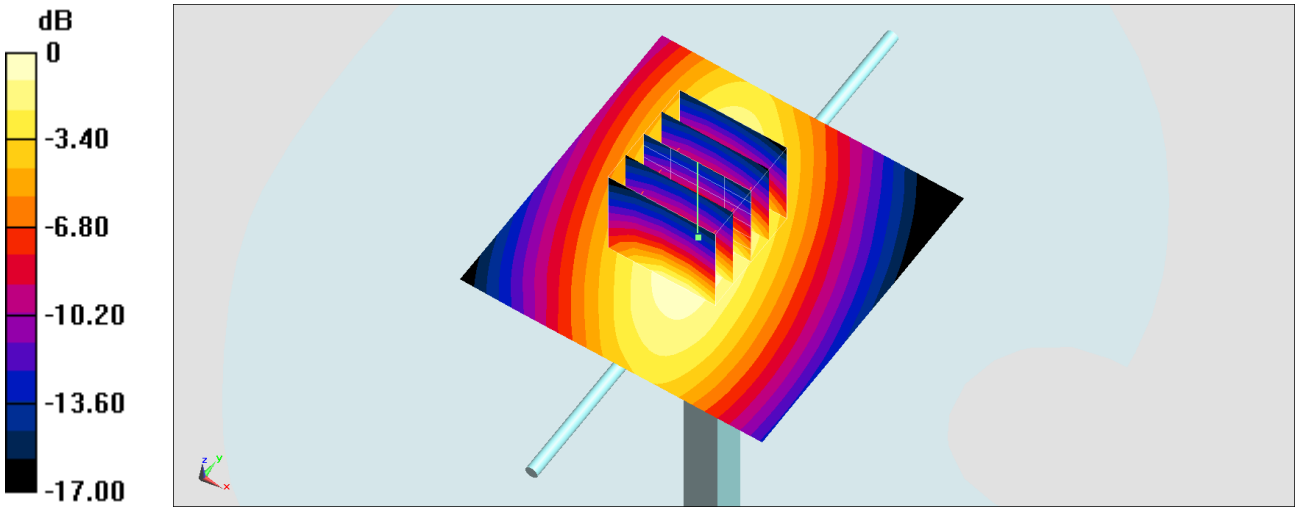

0 dB = 2.73 W/kg = 4.36 dBW/kg

System Check_Head_835MHz

DUT: D835V2-4d167

Communication System: CW; Frequency: 835 MHz;Duty Cycle: 1:1
Medium: HSL_850_201007 Medium parameters used: f = 835 MHz; σ = 0.931 S/m; ε_r = 42.291; ρ = 1000 kg/m^3
Ambient Temperature：23.3 ℃; Liquid Temperature：22.3 ℃

DASY5 Configuration:
- Probe: ES3DV3 - SN3124;ConvF(6.28, 6.28, 6.28) @ 835 MHz;Calibrated: 2019/12/18
- Sensor-Surface: 3mm (Mechanical Surface Detection)
- Electronics: DAE4 Sn316; Calibrated: 2019/12/20
- Phantom: SAM_Right; Type: QD000P40CD; Serial: TP:1815
- Measurement SW: DASY52, Version 52.10 (4);SEMCAD X Version 14.6.14 (7483)

Pin=250mW/Area Scan (61x61x1): Interpolated grid: dx=1.500 mm, dy=1.500 mm
Maximum value of SAR (interpolated) = 2.92 W/kg

Pin=250mW/Zoom Scan (5x5x7)/Cube 0: Measurement grid: dx=8mm, dy=8mm, dz=5mm
Reference Value = 59.72 V/m; Power Drift = -0.09 dB
Peak SAR (extrapolated) = 3.50 W/kg
SAR(1 g) = 2.41 W/kg; SAR(10 g) = 1.59 W/kg
Maximum value of SAR (measured) = 2.81 W/kg

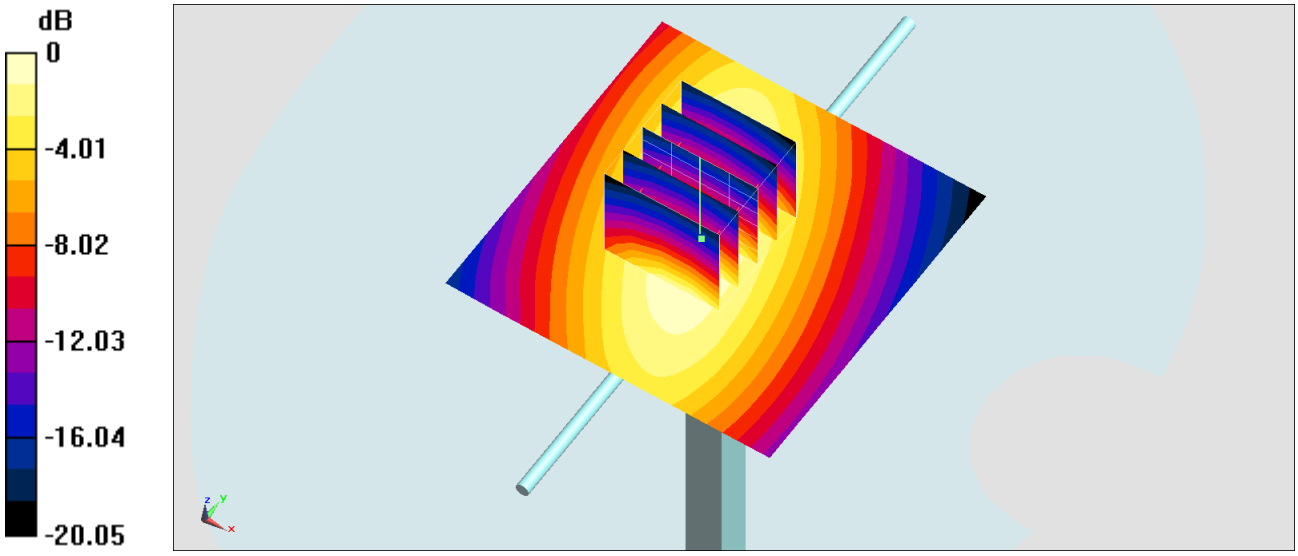

0 dB = 2.92 W/kg = 4.65 dBW/kg

System Check_Head_1750MHz

DUT: D1750V2-1112

Communication System: CW; Frequency: 1750 MHz;Duty Cycle: 1:1
Medium: HSL_1750_200930 Medium parameters used: f = 1750 MHz; σ = 1.36 S/m; ε_r = 40.072; ρ = 1000 kg/m^3
Ambient Temperature：23.5 ℃; Liquid Temperature：22.5 ℃

DASY5 Configuration:
- Probe: ES3DV3 - SN3124; ConvF(5.53, 5.53, 5.53) @ 1750 MHz; Calibrated: 2019/12/18
- Sensor-Surface: 3mm (Mechanical Surface Detection)
- Electronics: DAE4 Sn316; Calibrated: 2019/12/20
- Phantom: SAM_Right; Type: QD000P40CD; Serial: TP:1815
- Measurement SW: DASY52, Version 52.10 (4);SEMCAD X Version 14.6.14 (7483)

Pin=250mW/Area Scan (61x61x1): Interpolated grid: dx=1.500 mm, dy=1.500 mm
Maximum value of SAR (interpolated) = 11.6 W/kg

Pin=250mW/Zoom Scan (5x5x7)/Cube 0: Measurement grid: dx=8mm, dy=8mm, dz=5mm
Reference Value = 85.52 V/m; Power Drift = 0.04 dB
Peak SAR (extrapolated) = 15.5 W/kg
SAR(1 g) = 8.89 W/kg; SAR(10 g) = 4.79 W/kg
Maximum value of SAR (measured) = 10.9 W/kg

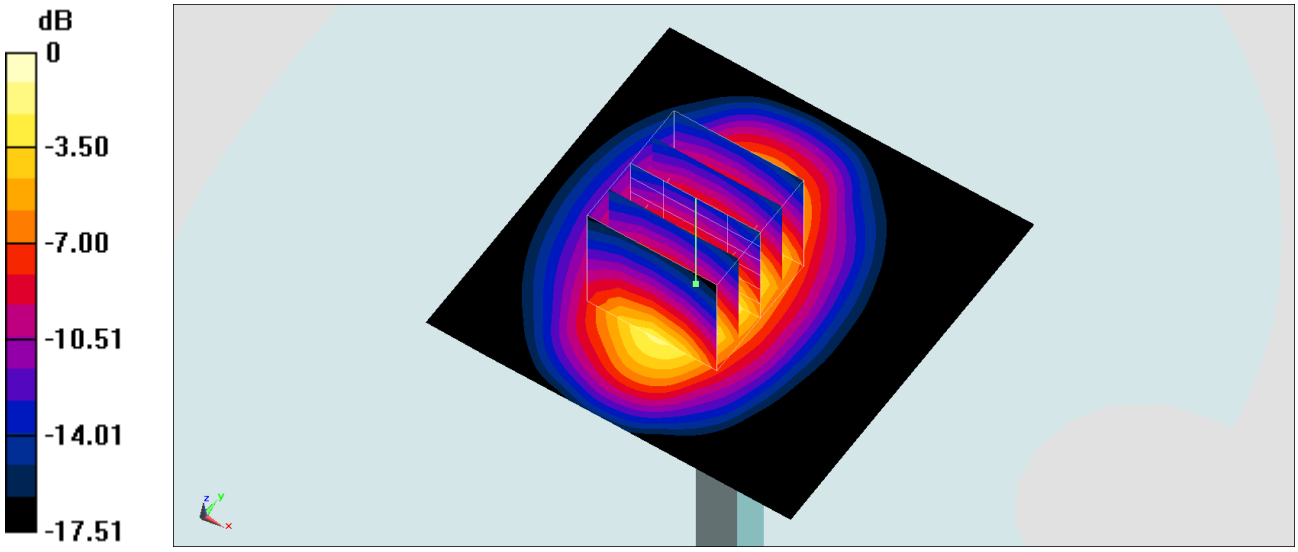

0 dB = 10.9 W/kg = 10.37 dBW/kg

System Check_Head_1750MHz

DUT: D1750V2-1112

Communication System: CW; Frequency: 1750 MHz;Duty Cycle: 1:1
Medium: HSL_1750_201008 Medium parameters used: f = 1750 MHz; σ = 1.35 S/m; ε_r = 40.022; ρ = 1000 kg/m^3
Ambient Temperature：23.5 ℃; Liquid Temperature：22.5 ℃

DASY5 Configuration:
- Probe: ES3DV3 - SN3124;ConvF(5.53, 5.53, 5.53) @ 1750 MHz;Calibrated: 2019/12/18
- Sensor-Surface: 3mm (Mechanical Surface Detection)
- Electronics: DAE4 Sn316; Calibrated: 2019/12/20
- Phantom: SAM_Right; Type: QD000P40CD; Serial: TP:1815
- Measurement SW: DASY52, Version 52.10 (4);SEMCAD X Version 14.6.14 (7483)

Pin=250mW/Area Scan (61x61x1): Interpolated grid: dx=1.500 mm, dy=1.500 mm
Maximum value of SAR (interpolated) = 11.5 W/kg

Pin=250mW/Zoom Scan (5x5x7)/Cube 0: Measurement grid: dx=8mm, dy=8mm, dz=5mm
Reference Value = 85.52 V/m; Power Drift = 0.04 dB
Peak SAR (extrapolated) = 15.4 W/kg
SAR(1 g) = 8.83 W/kg; SAR(10 g) = 4.75 W/kg
Maximum value of SAR (measured) = 10.8 W/kg

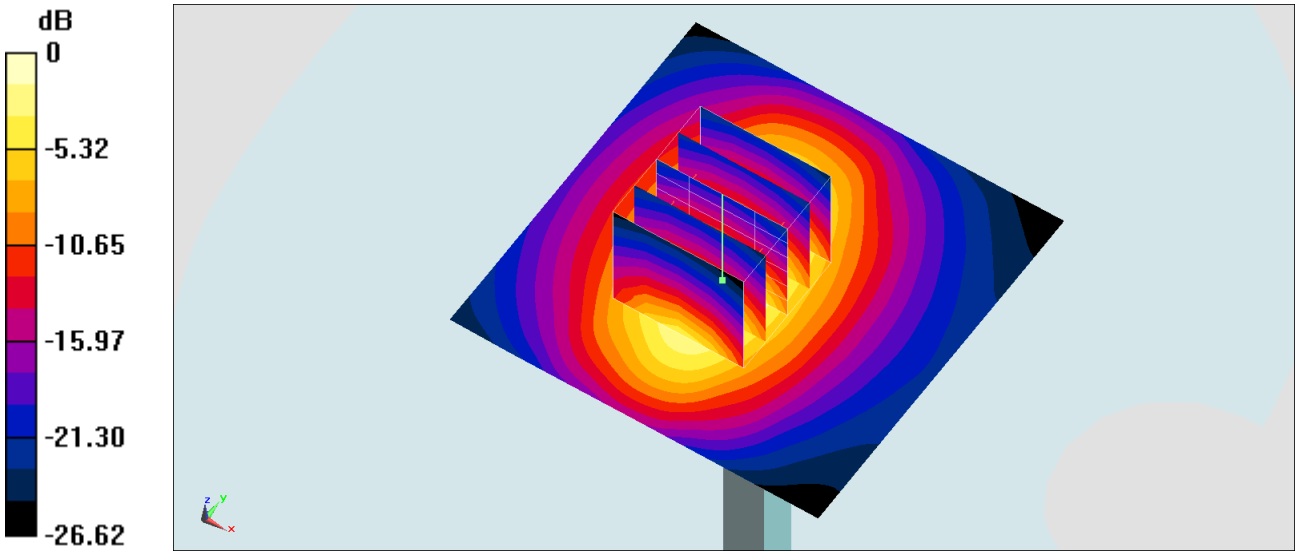

0 dB = 11.5 W/kg = 10.61 dBW/kg

System Check_Head_1900MHz

DUT: D1900V2-5d041

Communication System: CW; Frequency: 1900 MHz;Duty Cycle: 1:1
Medium: HSL_1900_201002 Medium parameters used: f = 1900 MHz; σ = 1.433 S/m; ε_r = 38.773; ρ = 1000 kg/m^3
Ambient Temperature：23.5 ℃; Liquid Temperature：22.5 ℃

DASY5 Configuration:
- Probe: ES3DV3 - SN3124; ConvF(5.31, 5.31, 5.31) @ 1900 MHz; Calibrated: 2019/12/18
- Sensor-Surface: 3mm (Mechanical Surface Detection)
- Electronics: DAE4 Sn316; Calibrated: 2019/12/20
- Phantom: SAM_Right; Type: QD000P40CD; Serial: TP:1815
- Measurement SW: DASY52, Version 52.10 (4);SEMCAD X Version 14.6.14 (7483)

Pin=250mW/Area Scan (61x61x1): Interpolated grid: dx=1.500 mm, dy=1.500 mm
Maximum value of SAR (interpolated) = 13.0 W/kg

Pin=250mW/Zoom Scan (5x5x7)/Cube 0: Measurement grid: dx=8mm, dy=8mm, dz=5mm
Reference Value = 84.40 V/m; Power Drift = 0.12 dB
Peak SAR (extrapolated) = 17.8 W/kg
SAR(1 g) = 9.74 W/kg; SAR(10 g) = 5.04 W/kg
Maximum value of SAR (measured) = 12.3 W/kg

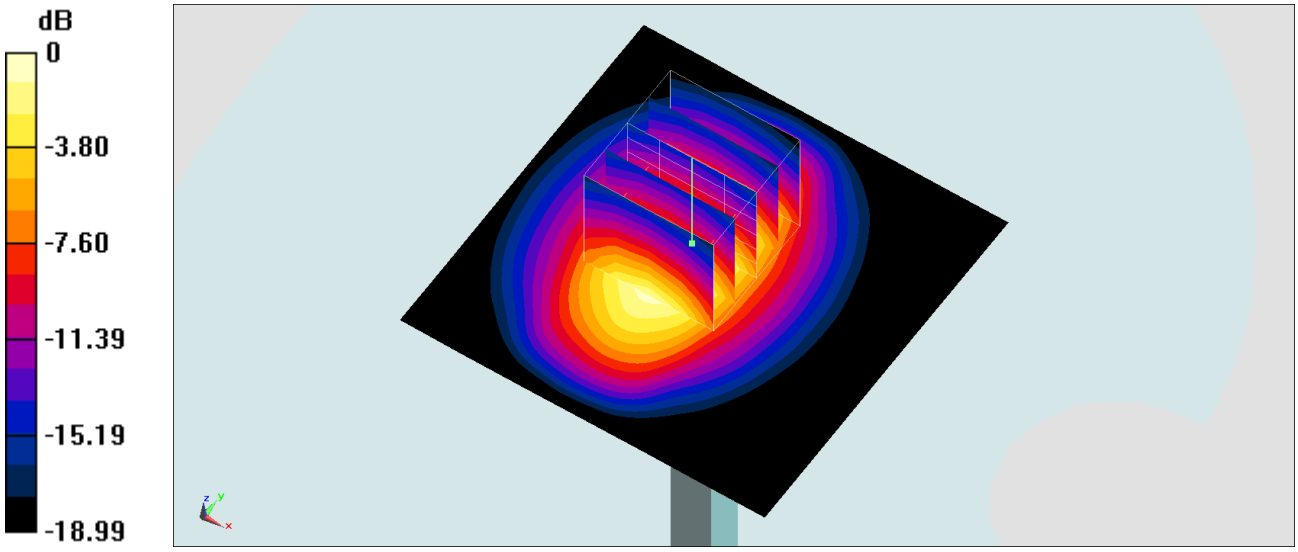

0 dB = 12.3 W/kg = 10.90 dBW/kg

System Check_Head_1900MHz

DUT: D1900V2-5d041

Communication System: CW; Frequency: 1900 MHz;Duty Cycle: 1:1
Medium: HSL_1900_201008 Medium parameters used: f = 1900 MHz; σ = 1.432 S/m; ε_r = 38.772; ρ = 1000 kg/m^3
Ambient Temperature：23.5 ℃; Liquid Temperature：22.5 ℃

DASY5 Configuration:
- Probe: ES3DV3 - SN3124;ConvF(5.31, 5.31, 5.31) @ 1900 MHz;Calibrated: 2019/12/18
- Sensor-Surface: 3mm (Mechanical Surface Detection)
- Electronics: DAE4 Sn316; Calibrated: 2019/12/20
- Phantom: SAM_Right; Type: QD000P40CD; Serial: TP:1815
- Measurement SW: DASY52, Version 52.10 (4);SEMCAD X Version 14.6.14 (7483)

Pin=250mW/Ar ea Scan (61x61x1): Interpolated grid: dx=1.500 mm, dy=1.500 mm
Maximum value of SAR (interpolated) = 13.0 W/kg

Pin=250mW/Zoom Scan (5x5x7)/Cube 0: Measurement grid: dx=8mm, dy=8mm, dz=5mm
Reference Value = 84.40 V/m; Power Drift = 0.02 dB
Peak SAR (extrapolated) = 17.8 W/kg
SAR(1 g) = 9.74 W/kg; SAR(10 g) = 5.04 W/kg
Maximum value of SAR (measured) = 12.3 W/kg

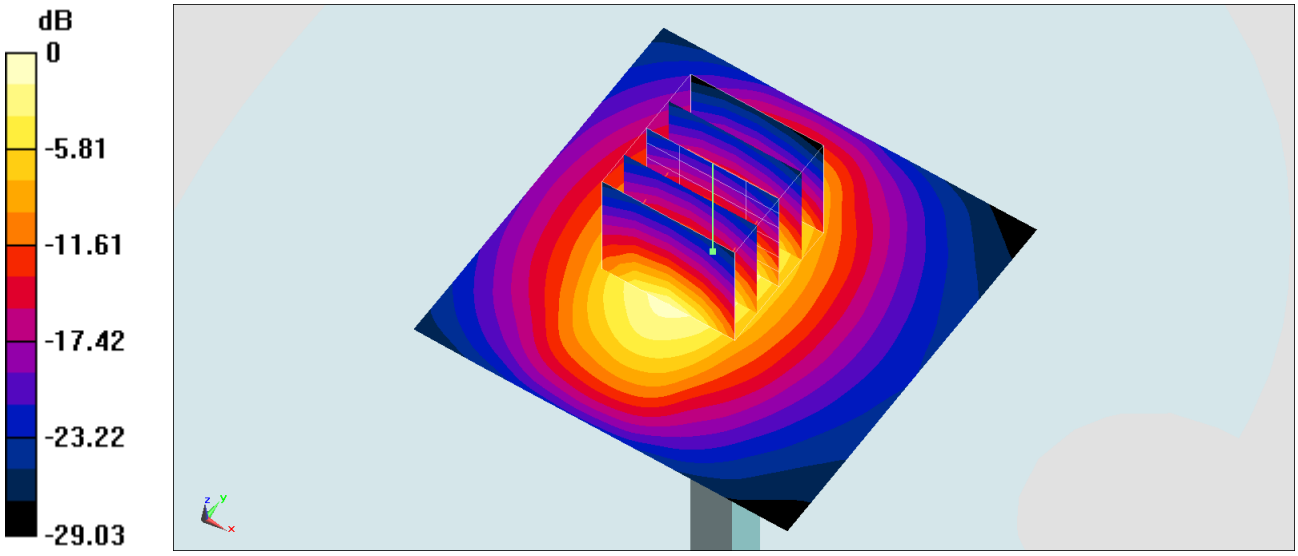

0 dB = 13.0 W/kg = 11.14 dBW/kg

System Check_Head_2450MHz

DUT: D2450V2-736

Communication System: CW; Frequency: 2450 MHz;Duty Cycle: 1:1
Medium: HSL_2450_200828 Medium parameters used : f = 2450 MHz; σ = 1.842 S/m; ε_r = 39.874; ρ = 1000 kg/m^3
Ambient Temperature：23.6 ℃; Liquid Temperature：22.6 ℃

DASY5 Configuration:
- Probe: ES3DV3 - SN3124; ConvF(4.64, 4.64, 4.64) @ 2450 MHz; Calibrated: 2019/12/18
- Sensor-Surface: 3mm (Mechanical Surface Detection)
- Electronics: DAE4 Sn316; Calibrated: 2019/12/20
- Phantom: SAM_Right; Type: QD000P40CD; Serial: TP:1815
- Measurement SW: DASY52, Version 52.10 (4);SEMCAD X Version 14.6.14 (7483)

Pin=250mW/Area Scan (71x71x1): Interpolated grid: dx=1.200 mm, dy=1.200 mm
Maximum value of SAR (interpolated) = 17.5 W/kg

Pin=250mW/Zoom Scan (7x7x7)/Cube 0: Measurement grid: dx=5mm, dy=5mm, dz=5mm
Reference Value = 96.48 V/m; Power Drift = 0.07 dB
Peak SAR (extrapolated) = 26.8 W/kg
SAR(1 g) = 12.9 W/kg; SAR(10 g) = 5.91 W/kg
Maximum value of SAR (measured) = 17.2 W/kg

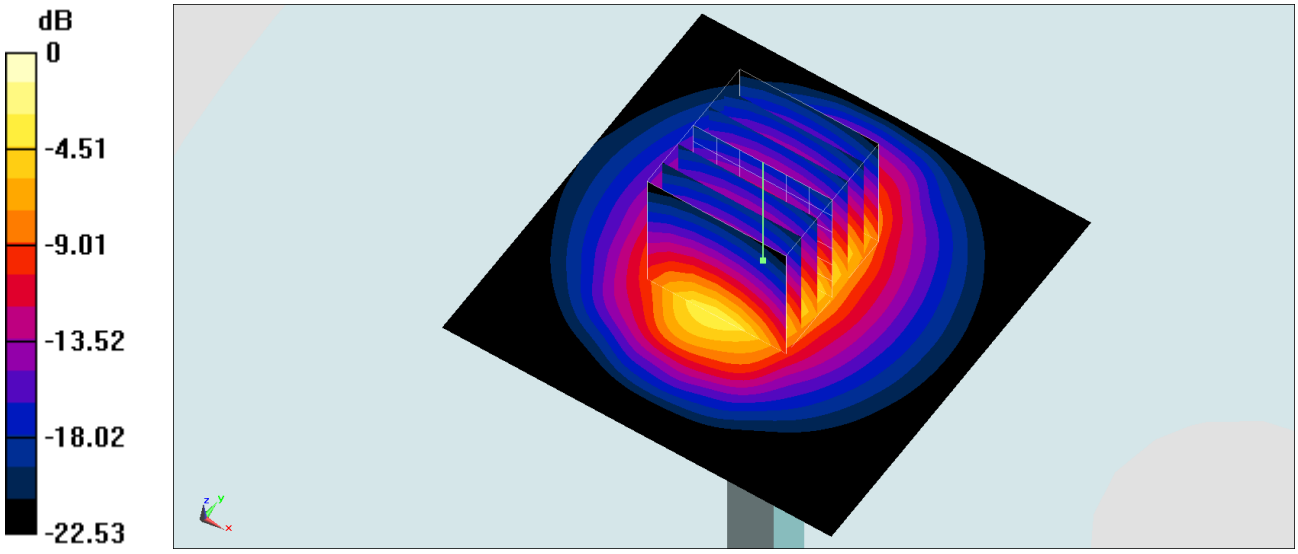

0 dB = 17.2 W/kg = 12.36 dBW/kg

System Check_Head_2450MHz

DUT: D2450V2-929

Communication System: CW ; Frequency: 2450 MHz;Duty Cycle: 1:1
Medium: HSL_2450_201015 Medium parameters used : f = 2450 MHz; σ = 1.8 S/m; ε_r = 39.388; ρ = 1000 kg/m^3
Ambient Temperature：23.4 ℃; Liquid Temperature：22.4 ℃

DASY5 Configuration:
- Probe: EX3DV4 - SN3753; ConvF(7.12, 7.12, 7.12) @ 2450 MHz; Calibrated: 2020/6/25
- Sensor-Surface: 1.4mm (Mechanical Surface Detection)
- Electronics: DAE4 Sn854; Calibrated: 2020/5/26
- Phantom: SAM_Right; Type: SAM; Serial: TP:1446
- Measurement SW: DASY52, Version 52.10 (4);SEMCAD X Version 14.6.14 (7483)

Pin=250mW/Area Scan (71x71x1): Interpolated grid: dx=1.200 mm, dy=1.200 mm
Maximum value of SAR (interpolated) = 21.7 W/kg

Pin=250mW/Zoom Scan (7x7x7)/Cube 0: Measurement grid: dx=5mm, dy=5mm, dz=5mm
Reference Value = 114.4 V/m; Power Drift = -0.04 dB
Peak SAR (extrapolated) = 25.8 W/kg
SAR(1 g) = 12.9 W/kg; SAR(10 g) = 6.04 W/kg
Maximum value of SAR (measured) = 21.3 W/kg

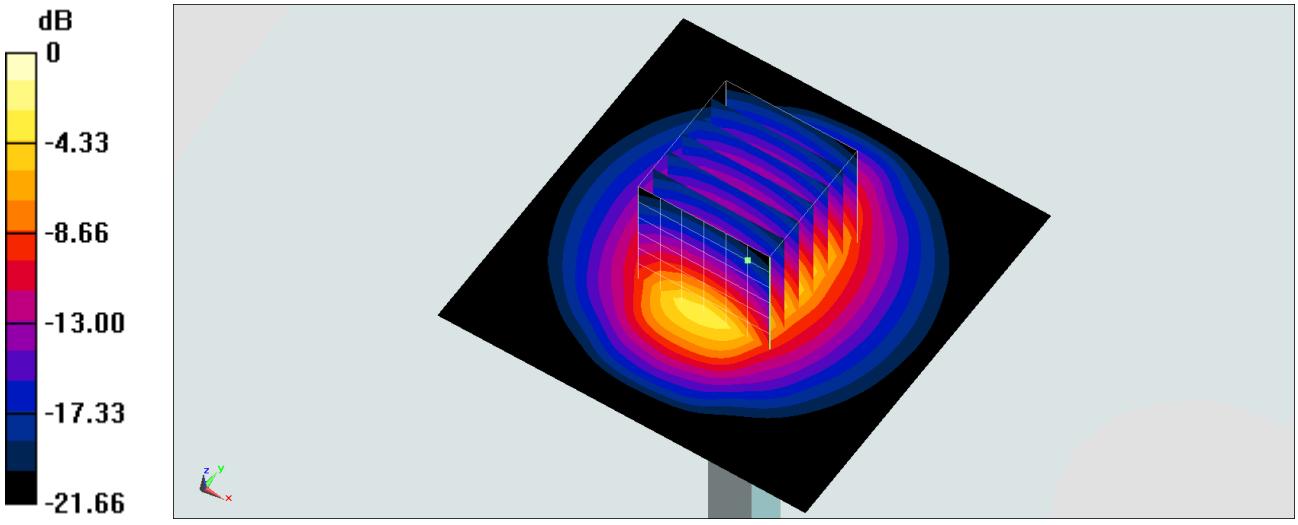

0 dB = 21.3 W/kg = 13.28 dBW/kg

System Check_Head_2600MHz

DUT: D2600V2-1008

Communication System: CW; Frequency: 2600 MHz;Duty Cycle: 1:1
Medium: HSL_2600_201001 Medium parameters used: f = 2600 MHz; σ = 1.984 S/m; ε_r = 38.231; ρ = 1000 kg/m^3
Ambient Temperature：23.6 ℃; Liquid Temperature：22.6 ℃

DASY5 Configuration:
- Probe: ES3DV3 - SN3124; ConvF(4.46, 4.46, 4.46) @ 2600 MHz; Calibrated: 2019/12/18
- Sensor-Surface: 3mm (Mechanical Surface Detection)
- Electronics: DAE4 Sn316; Calibrated: 2019/12/20
- Phantom: SAM_Right; Type: QD000P40CD; Serial: TP:1815
- Measurement SW: DASY52, Version 52.10 (4);SEMCAD X Version 14.6.14 (7483)

Pin=250mW/Area Scan (61x61x1): Interpolated grid: dx=1.500 mm, dy=1.500 mm
Maximum value of SAR (interpolated) = 18.9 W/kg

Pin=250mW/Zoom Scan (5x5x7)/Cube 0: Measurement grid: dx=8mm, dy=8mm, dz=5mm
Reference Value = 92.71 V/m; Power Drift = 0.07 dB
Peak SAR (extrapolated) = 28.4 W/kg
SAR(1 g) = 13.3 W/kg; SAR(10 g) = 5.92 W/kg
Maximum value of SAR (measured) = 16.7 W/kg

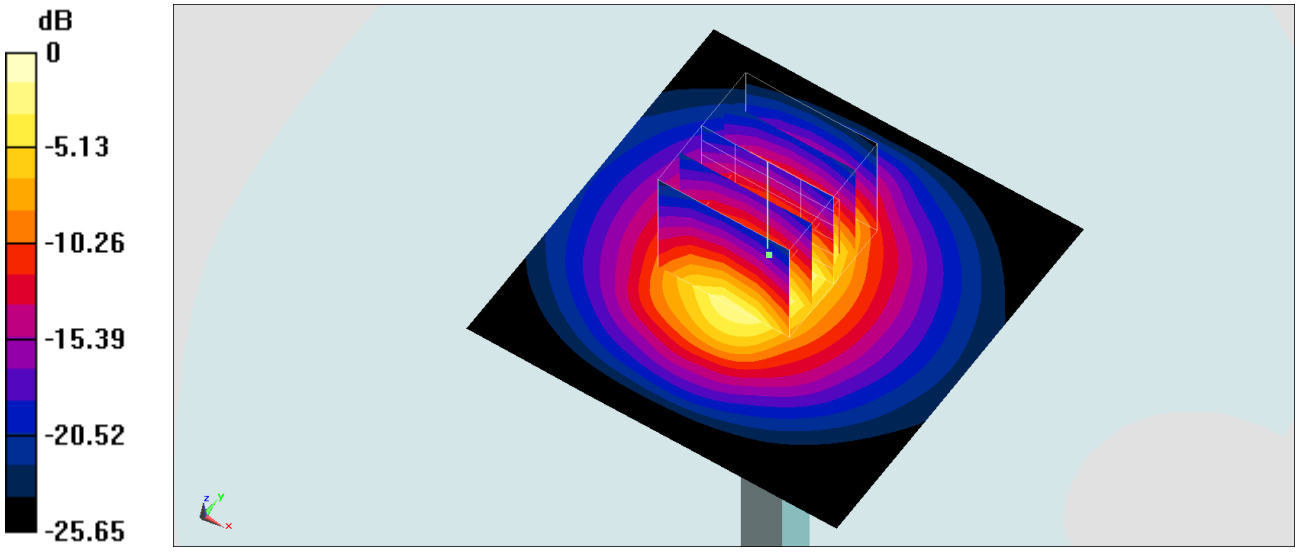

0 dB = 16.7 W/kg = 12.23 dBW/kg

System Check_Head_2600MHz

DUT: D2600V2-1008

Communication System: CW; Frequency: 2600 MHz;Duty Cycle: 1:1
Medium: HSL_2600_201008 Medium parameters used: f = 2600 MHz; σ = 2.021 S/m; ε_r = 40.188; ρ = 1000 kg/m^3
Ambient Temperature：23.5 ℃; Liquid Temperature：22.5 ℃

DASY5 Configuration:
- Probe: ES3DV3 - SN3124;ConvF(4.46, 4.46, 4.46) @ 2600 MHz;Calibrated: 2019/12/18
- Sensor-Surface: 3mm (Mechanical Surface Detection)
- Electronics: DAE4 Sn316; Calibrated: 2019/12/20
- Phantom: SAM_Right; Type: QD000P40CD; Serial: TP:1815
- Measurement SW: DASY52, Version 52.10 (4);SEMCAD X Version 14.6.14 (7483)

Pin=250mW/Area Scan (61x61x1): Interpolated grid: dx=1.500 mm, dy=1.500 mm
Maximum value of SAR (interpolated) = 19.3 W/kg

Pin=250mW/Zoom Scan (5x5x7)/Cube 0: Measurement grid: dx=8mm, dy=8mm, dz=5mm
Reference Value = 92.71 V/m; Power Drift = 0.07 dB
Peak SAR (extrapolated) = 29.0 W/kg
SAR(1 g) = 13.6 W/kg; SAR(10 g) = 6.03 W/kg
Maximum value of SAR (measured) = 17.1 W/kg

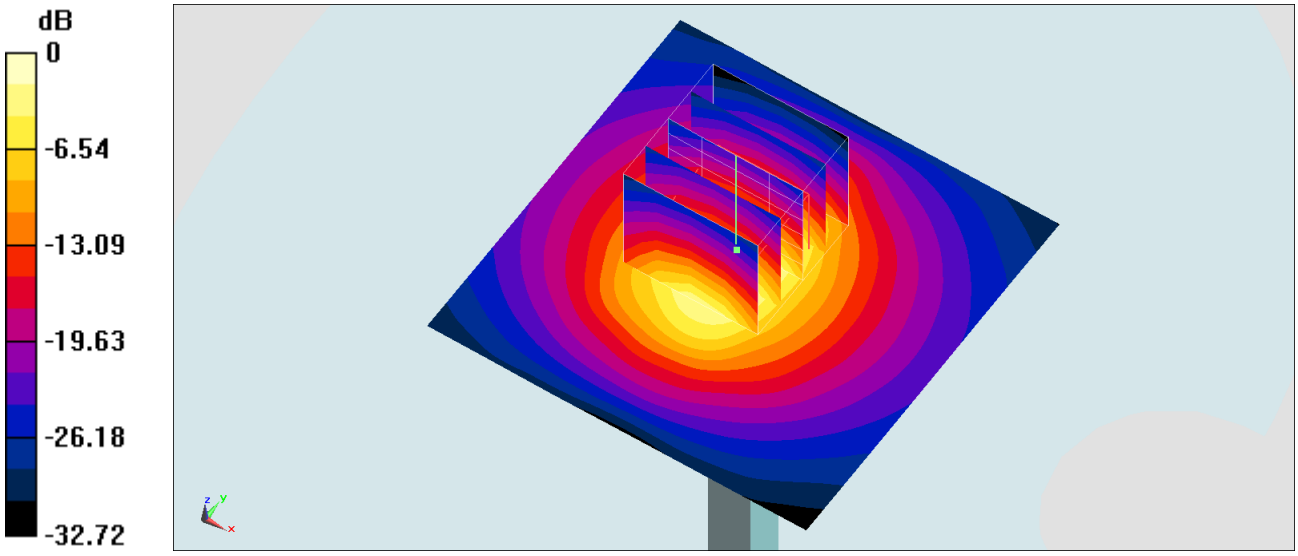

0 dB = 19.3 W/kg = 12.86 dBW/kg

System Check_Head_5250MHz

DUT: D5GHzV2-1006

Communication System: CW; Frequency: 5250 MHz;Duty Cycle: 1:1
Medium: HSL_5G_200907 Medium parameters used : f = 5250 MHz; σ = 4.592 S/m; ε_r = 36.821; ρ = 1000 kg/m^3
Ambient Temperature：23.4 ℃; Liquid Temperature：22.4 ℃

DASY5 Configuration
- Probe: EX3DV4 - SN7306; ConvF(5.36, 5.36, 5.36) @ 5250 MHz; Calibrated: 2020/7/24
- Sensor-Surface: 1.4mm (Mechanical Surface Detection)
- Electronics: DAE3 Sn495; Calibrated: 2020/7/21
- Phantom: SAM LEFT; Type: QD000P40CD; Serial: TP:1718
- Measurement SW: DASY52, Version 52.10 (4); SEMCAD X Version 14.6.14 (7483)

Pin=100mW/Area Scan (71x71x1): Interpolated grid: dx=1.000 mm, dy=1.000 mm
Maximum value of SAR (interpolated) = 17.6 W/kg

Pin=100mW/Zoom Scan (7x7x7)/Cube 0: Measurement grid: dx=4mm, dy=4mm, dz=1.4mm
Reference Value = 69.34 V/m; Power Drift = 0.11 dB
Peak SAR (extrapolated) = 30.3 W/kg
SAR(1 g) = 7.54 W/kg; SAR(10 g) = 2.15 W/kg
Maximum value of SAR (measured) = 19.0 W/kg

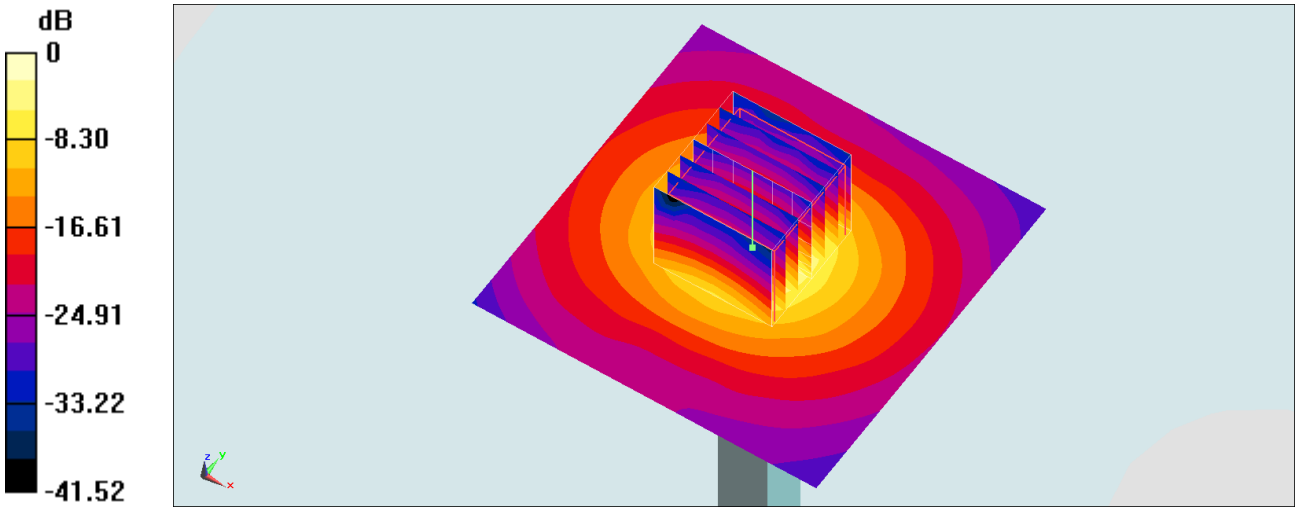

0 dB = 19.0 W/kg = 12.79 dBW/kg

System Check_Head_5600MHz

DUT: D5GHzV2-1006

Communication System: CW; Frequency: 5600 MHz;Duty Cycle: 1:1
Medium: HSL_5G_200908 Medium parameters used: f = 5600 MHz; σ = 4.921 S/m; ε_r = 36.171; ρ = 1000 kg/m^3
Ambient Temperature：23.4 ℃; Liquid Temperature：22.4 ℃

DASY5 Configuration
- Probe: EX3DV4 - SN7306; ConvF(4.68, 4.68, 4.68) @ 5600 MHz; Calibrated: 2020/7/24
- Sensor-Surface: 1.4mm (Mechanical Surface Detection)
- Electronics: DAE3 Sn495; Calibrated: 2020/7/21
- Phantom: SAM LEFT; Type: QD000P40CD; Serial: TP:1718
- Measurement SW: DASY52, Version 52.10 (4); SEMCAD X Version 14.6.14 (7483)

Pin=100mW/Area Scan (71x71x1): Interpolated grid: dx=1.000 mm, dy=1.000 mm
Maximum value of SAR (interpolated) = 22.3 W/kg

Pin=100mW/Zoom Scan (7x7x7)/Cube 0: Measurement grid: dx=4mm, dy=4mm, dz=1.4mm
Reference Value = 75.13 V/m; Power Drift = -0.11 dB
Peak SAR (extrapolated) = 37.7 W/kg
SAR(1 g) = 8.52 W/kg; SAR(10 g) = 2.35 W/kg
Maximum value of SAR (measured) = 22.3 W/kg

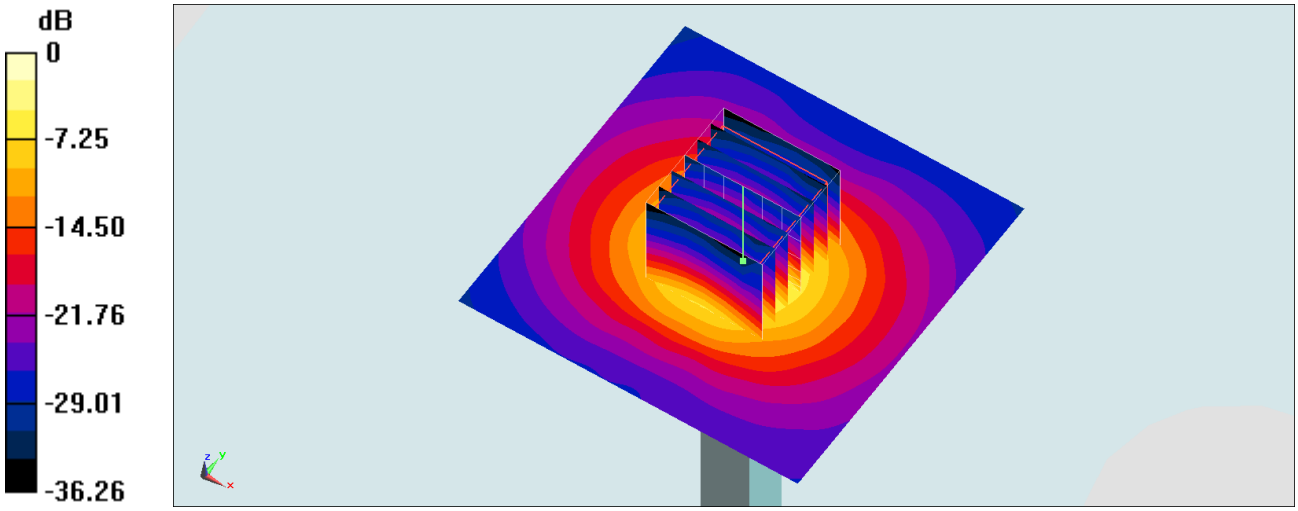

0 dB = 22.3 W/kg = 13.48 dBW/kg

System Check_Head_5750MHz

DUT: D5GHzV2-1006

Communication System: CW; Frequency: 5750 MHz;Duty Cycle: 1:1
Medium: HSL_5G_200831 Medium parameters used: f = 5750 MHz; σ = 5.131 S/m; ε_r = 36.068; ρ = 1000 kg/m^3
Ambient Temperature：23.4 ℃; Liquid Temperature：22.4 ℃

DASY5 Configuration
- Probe: EX3DV4 - SN7306; ConvF(4.91, 4.91, 4.91) @ 5750 MHz; Calibrated: 2020/7/24
- Sensor-Surface: 1.4mm (Mechanical Surface Detection)
- Electronics: DAE3 Sn495; Calibrated: 2020/7/21
- Phantom: SAM LEFT; Type: QD000P40CD; Serial: TP:1718
- Measurement SW: DASY52, Version 52.10 (4); SEMCAD X Version 14.6.14 (7483)

Pin=100mW/Area Scan (71x71x1): Interpolated grid: dx=1.000 mm, dy=1.000 mm
Maximum value of SAR (interpolated) = 18.8 W/kg

Pin=100mW/Zoom Scan (7x7x7)/Cube 0: Measurement grid: dx=4mm, dy=4mm, dz=1.4mm
Reference Value = 66.85 V/m; Power Drift = -0.13 dB
Peak SAR (extrapolated) = 35.0 W/kg
SAR(1 g) = 7.52 W/kg; SAR(10 g) = 2.11 W/kg
Maximum value of SAR (measured) = 20.2 W/kg

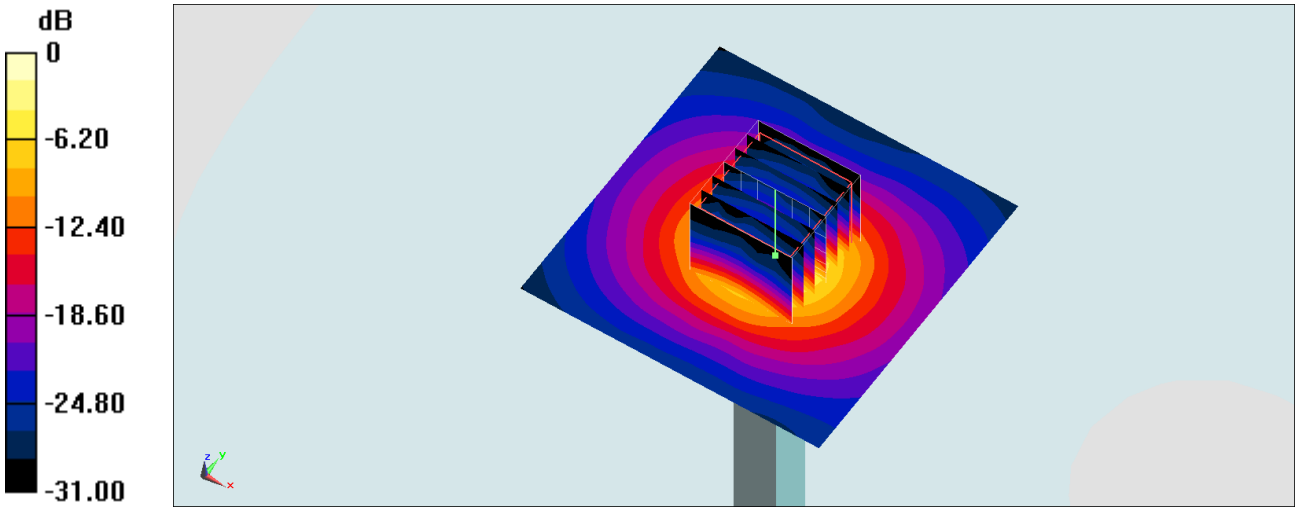

0 dB = 20.2 W/kg = 13.05 dBW/kg