HEARING AID COMPATIBILITY RF EMISSIONS TEST REPORT

FCC ID	:	**UZ7EM45A1**
Equipment	:	**Enterprise Mobile**
Brand Name	:	**Zebra**
Model Name	:	**EM45A1**
WD Emission Result	:	**PASS**
Applicant	:	**Zebra Technologies Corporation 3 Overlook Point, Lincolnshire, IL 60069 USA**
Manufacturer	:	**Zebra Technologies Corporation 3 Overlook Point, Lincolnshire, IL 60069 USA**
Standard	:	**FCC 47 CFR §20.19 ANSI C63.19-2019**
Date Tested	:	**Oct. 19, 2024**

We, Sporton International Inc. (Kunshan), would like to declare that the tested sample provide by manufacturer and the test data has been evaluated in accordance with the test procedures given in ANSI C63.19-2019 / 47 CFR Part 20.19 and has been in compliance with the applicable technical standards.

The test results in this report apply exclusively to the tested model / sample. Without written approval of Sporton International Inc. (Kunshan), the test report shall not be reproduced except in full.

Si Zhang

Approved by: Si Zhang

ACCREDITED
Cert #5145.02

Sporton International Inc. (Kunshan)
No. 1098, Pengxi North Road, Kunshan Economic Development Zone Jiangsu Province 215300 People's Republic of China

Table of Contents

1. General Information 4
2. Testing Location 6
3. Applied Standards 6
4. Air Interfaces 7
5. WD Emission Requirements 8
6. System Description and Operation 9
7. RF Emissions Test Procedure 12
8. Test Equipment List 14
9. System Validation 15
10. Modulation Interference Factor 16
11. Evaluation of WD RF interference potential 17
    11.1 Evaluation RF_{AIPL} 17
12. Conducted RF Output Power (Unit: dBm) 23
13. RF_{AIL} Test Results 24
14. Uncertainty Assessment 25
15. References 26

Appendix A. Plots of System Performance Check
Appendix B. Plots of RF Emission Measurement
Appendix C. DASY Calibration Certificate
Appendix D. UID specifications for HAC RFE
Appendix E. Test Setup Photos

History of this test report

Report No.	Version	Description	Issued Date
HA460505-02A	Rev. 01	Initial issue of report	Dec. 16, 2024
HA460505-02A	Rev. 02	Updated Section 11. This report is an updated version, replacing the report issued on Dec. 16, 2024.	Feb. 08, 2025

1. General Information

Product Feature & Specification	
Applicant Name	Zebra Technologies Corporation
Equipment Name	Enterprise Mobile
Brand Name	Zebra
Model Name	EM45A1
IMEI Code	IMEI 1: 354708620060327 IMEI 2: 354708620063511
FCC ID	UZ7EM45A1
HW	DV
SW	14-24-09.00-UG-U00-PRD-ATH-04
MFD	09DEC24
EUT Stage	Identical Prototype
Frequency Band	WCDMA Band II: 1850 MHz ~ 1910 MHz WCDMA Band IV: 1710 MHz ~ 1755 MHz WCDMA Band V: 824 MHz ~ 849 MHz LTE Band 2: 1850 MHz ~ 1910 MHz LTE Band 4: 1710 MHz ~ 1755 MHz LTE Band 5: 824 MHz ~ 849 MHz LTE Band 7: 2500 MHz ~ 2570 MHz LTE Band 12: 699 MHz ~ 716 MHz LTE Band 13: 777 MHz ~ 787 MHz LTE Band 14: 788 MHz ~ 798 MHz LTE Band 17: 704 MHz ~ 716 MHz LTE Band 25: 1850 MHz ~ 1915 MHz LTE Band 26: 814 MHz ~ 849 MHz LTE Band 30: 2305 MHz ~ 2315 MHz LTE Band 38: 2570 MHz ~ 2620 MHz LTE Band 41: 2496 MHz ~ 2690 MHz LTE Band 48: 3550 MHz ~ 3700 MHz LTE Band 66: 1710 MHz ~ 1780 MHz LTE Band 71: 663 MHz ~ 698 MHz 5G NR n2 : 1850 MHz ~ 1910 MHz 5G NR n5 : 824 MHz ~ 849 MHz 5G NR n7 : 2500 MHz ~ 2570 MHz 5G NR n12 : 699 MHz ~ 716 MHz 5G NR n13 : 777 MHz ~ 787 MHz 5G NR n14 : 788 MHz ~ 798 MHz 5G NR n25 : 1850 MHz ~ 1915 MHz 5G NR n26 : 814 MHz ~ 849 MHz 5G NR n30 : 2305 MHz ~ 2315 MHz 5G NR n38 : 2570 MHz ~ 2620 MHz 5G NR n41 : 2496 MHz ~ 2690 MHz 5G NR n48 : 3550 MHz ~ 3700 MHz 5G NR n66 : 1710 MHz ~ 1780 MHz 5G NR n71 : 663 MHz ~ 698 MHz 5G NR n77: 3450 MHz ~ 3980 MHz 5G NR n78: 3450 MHz ~ 3800 MHz WLAN 2.4GHz Band: 2412 MHz ~ 2462 MHz WLAN 5.2GHz Band: 5180 MHz ~ 5240 MHz WLAN 5.3GHz Band: 5260 MHz ~ 5320 MHz WLAN 5.5GHz Band: 5500 MHz ~ 5720 MHz WLAN 5.8GHz Band: 5745 MHz ~ 5825 MHz WLAN 6GHz U-NII 5: 5925 MHz ~ 6425 MHz WLAN 6GHz U-NII 6: 6425 MHz ~ 6525 MHz WLAN 6GHz U-NII 7: 6525 MHz ~ 6875 MHz WLAN 6GHz U-NII 8: 6875 MHz ~ 7125 MHz Bluetooth: 2402 MHz ~ 2480 MHz NFC : 13.56 MHz
Mode	RMC/AMR 12.2Kbps HSDPA HSUPA DC-HSDPA HSPA+ (16QAM uplink is supported) LTE: QPSK, 16QAM, 64QAM, 256QAM 5G NR: DFT-s-OFDM/CP-OFDM, Pi/2 BPSK/QPSK/16QAM/64QAM/256QAM

	WLAN 2.4GHz 802.11b/g/n HT20 WLAN 2.4GHz 802.11ac VHT20 WLAN 2.4GHz 802.11ax HE20 WLAN 5GHz 802.11a/n HT20/HT40 WLAN 5GHz 802.11ac VHT20/VHT40/VHT80/VHT160 WLAN 5GHz 802.11ax HE20/HE40/HE80/HE160 WLAN 6GHz 802.11a/ax HE20/HE40/HE80/HE160 Bluetooth BR/EDR/LE NFC: ASK

Specification of Accessory				
AC Adapter 1 (Type C Wall Charger 1)	**Brand Name**	Zebra	**Model**	SAWA-102-22520A
			Part Number	PWR-WUA5V45W1US
AC Adapter 2 (Type A Wall Charger 2)	**Brand Name**	Zebra	**Model**	SAWA-65-20005A
			Part Number	PWR-WUA5V12W0US
Battery 1	**Brand Name**	Zebra	**Model**	BT-000501
			Part Number	BT-000501-2000
Earphone 1 (Wired headset USB-C)	**Brand Name**	Zebra	**Part Number**	HDST-USBC-PTT1-01
Earphone 2 (Rugged Bluetooth Headset)	**Brand Name**	Zebra	**Part Number**	HS3100-OTH
Earphone 3 (3.5mm PTT Headset)	**Brand Name**	Zebra	**Part Number**	HDST-35MM-PTT1-02
Earphone 4 (Rugged Headset)	**Brand Name**	Zebra	**Part Number**	HS2100-OTH
3.5mm to 3.5mm audio connector	**Brand Name**	Zebra	**Part Number**	CBL-HS2100-3MS1-01
Type C-Audio Cable (Type C to 3.5mm)	**Brand Name**	Zebra	**Part Number**	ADP-USBC-35MM1-01
USB Cable 1 (USB-C to C Cable)	**Brand Name**	Zebra	**Part Number**	CBL-EC5X-USBC3A-01
USB Cable 2 (USB-A to C Cable)	**Brand Name**	Zebra	**Part Number**	CBL-TC5X-USBC2A-01
EM45 Protective Case	**Brand Name**	Zebra	**Part Number**	SG-EM45EXO2-01

2. Testing Location

Sporton International Inc. (Kunshan) is accredited to ISO/IEC 17025:2017 by American Association for Laboratory Accreditation with Certificate Number 5145.02.

Testing Laboratory			
Test Firm	Sporton International Inc. (Kunshan)		
Test Site Location	No. 1098, Pengxi North Road, Kunshan Economic Development Zone Jiangsu Province 215300 People's Republic of China TEL : +86-512-57900158		
Test Site No.	Sporton Site No.	FCC Designation No.	FCC Test Firm Registration No.
	SAR05-KS	CN1257	314309

3. Applied Standards

- FCC CFR47 Part 20.19
- ANSI C63.19-2019
- FCC KDB 285076 D01 HAC Guidance v06r04
- FCC KDB 285076 D03 HAC FAQ v01r06

4. Air Interfaces

Air Interface	Band MHz	Type	C63.19 RF_{AIL} Tested	Simultaneous Transmitter	Name of Voice Service	Power State Compliance
WCDMA	Band II	VO	No(1)	WLAN, BT	CMRS Voice	Pmax(6)
	Band IV			WLAN, BT		
	Band V			WLAN, BT		
	HSPA	VD	No(1)	WLAN, BT	Google Meet WFC(5)	
LTE FDD	Band 2	VD	No(1)	5G NR, WLAN, BT	VoLTE / Google Meet WFC(5)	Pmax(6)
	Band 4			5G NR, WLAN, BT		
	Band 5			5G NR, WLAN, BT		
	Band 7			5G NR, WLAN, BT		
	Band 12			5G NR, WLAN, BT		
	Band 13			5G NR, WLAN, BT		
	Band 14			5G NR, WLAN, BT		
	Band 17			5G NR, WLAN, BT		
	Band 25			5G NR, WLAN, BT		
	Band 26			5G NR, WLAN, BT		
	Band 30			5G NR, WLAN, BT		
	Band 66			5G NR, WLAN, BT		
	Band 71			5G NR, WLAN, BT		
LTE TDD	Band 41	VD	Yes	5G NR, WLAN, BT	VoLTE / Google Meet WFC(5)	
	Band 38	VD	No(1)	5G NR, WLAN, BT		
	Band 48			5G NR, WLAN, BT		
5G NR FDD	n2	VD	No(1)	LTE, WLAN, BT	VoNR / Google Meet WFC(5)	Pmax(6)
	n5			LTE, WLAN, BT		
	n7			LTE, WLAN, BT		
	n12			LTE, WLAN, BT		
	n13			LTE, WLAN, BT		
	n14			LTE, WLAN, BT		
	n25			LTE, WLAN, BT		
	n26			LTE, WLAN, BT		
	n30			LTE, WLAN, BT		
	n66			LTE, WLAN, BT		
	n71			LTE, WLAN, BT		
5G NR TDD	n38	VD	No(1)	LTE, WLAN, BT		
	n48			LTE, WLAN, BT		
	n41		Yes(4)	LTE, WLAN, BT		
	n77			LTE, WLAN, BT		
	n78			LTE, WLAN, BT		
Wi-Fi	2450	VD	No(1)	WCDMA, LTE, 5G NR, 5GHz/6GHz WLAN, BT	VoWiFi / Google Meet WFC(5)	Full
	5200			WCDMA, LTE, 5G NR, 2.4GHz WLAN, BT		
	5300			WCDMA, LTE, 5G NR, 2.4GHz WLAN, BT		
	5500			WCDMA, LTE, 5G NR, 2.4GHz WLAN, BT		
	5800			WCDMA, LTE, 5G NR, 2.4GHz WLAN, BT		
	U-NII 5	VD	No(3)	WCDMA, LTE, 5G NR, 2.4GHz WLAN, BT	VoWiFi / Google Meet WFC(5)	Full
	U-NII 6		No(2)			
	U-NII 7					
	U-NII 8					
BT	2450	DT	No	WCDMA, LTE, 5G NR, 2.4GHz/5GHz/6GHz WLAN	NA	NA

Type Transport:
VO= Voice only
DT= Digital Transport only (no voice)
VD= CMRS and IP Voice Service over Digital Transport

Remark:
1. The air interface max power plus MIF is complies with ANSI C63.19-2019 Table 4.1 RF_{AIPL}
2. WLAN6GHz U-NII 6/7/8 were above 6GHz and were not evaluated due to outside of the current scope of ANSI C63.19 and FCC HAC regulations.
3. The WLAN6GHz U-NII-5 was evaluated for operations which are entirely below 6 GHz, above 6 GHz were not evaluated due outside of the current scope of ANSI C63.19 and FCC HAC regulations.
4. The device have similar frequency in some FR1 5GNR n77/78, since the supported frequency spans for the smaller FR1 5GNR bands are

	completely cover by the larger FR1 5GNR bands, therefore, only larger FR1 5GNR bands were required to be tested for hearing-aid compliance.
5.	The Workforce Connect (WFC) is an over-the-top (OTT) – voice services operating over IP, and this voice application was development and pre-installed on a wireless handset by the Zebra Technologies Corporation.
6.	The product only 3G/4G/5G support time-average SAR feature, therefore UMTS/LTE/5GFR1 HAC were tested at Pmax level(the maximum power). However, due the WiFi operation doesn't support Time average SAR feature, therefore, WiFi operation were still assessment at the maximum power level to meet HAC RF compliance.

5. WD Emission Requirements

The WD's conducted power must be at or below either the stated RFAIPL (Table 4.1) or the stated peak power level (Table 4.2), or the average near-field emissions over the measurement area must be at or below the stated RFAIL (Table 4.3), or the stated peak field strength (Table 4.4). The WD may demonstrate compliance by meeting any of these four requirements, but it must do so in each of its operating bands at its established worst-case normal speech-mode operating condition.

Table 4.1 - Wireless device RF audio interference power level	
Frequency range (MHz)	RF_{AIPL} (dBm)
< 960	29
960 - 2000	26
> 2000	25

Table 4.2 - Wireless device RF peak power level	
Frequency range (MHz)	$RF_{Peak\ Power}$ (dBm)
< 960	35
960 - 2000	32
> 2000	31

Table 4.3 - Wireless device RF audio interference level	
Frequency range (MHz)	RF_{AIL} [dB(V/m)]
< 960	39
960 - 2000	36
> 2000	35

Table 4.4 - Wireless device RF peak near-field level	
Frequency range (MHz)	RF_{Peak} [dB(V/m)]
< 960	45
960 - 2000	42
> 2000	41

6. System Description and Operation

<System Components>

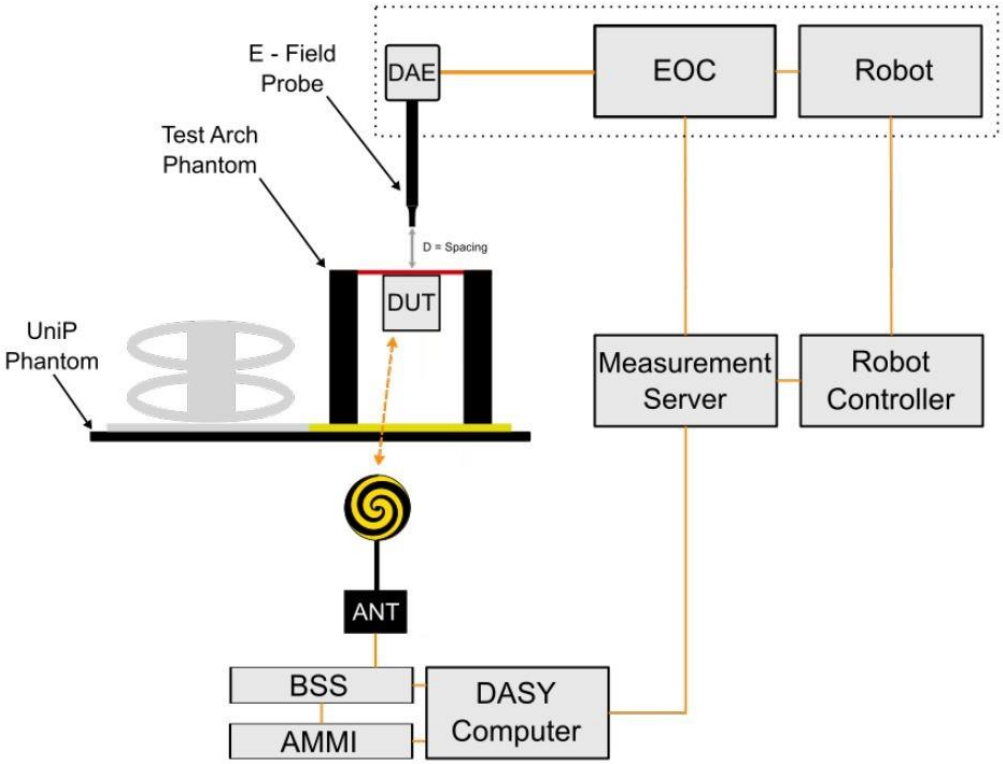

Remark:

A typical al DASY system for HAC measurements consists of

- 6-axis robotic arm (Staubli TX2-60L/ TX2-90XL) for positioning the probe
- Mounting Platform for keeping the phantoms at a field location relative to the robot
- Measurement Server for handling all time-critical tasks, such as measurement data acquisition and supervision of safety features
- EOC (Electrical to Optical Converter) for converting the optical signal from the Data Acquisition Electronics (DAE) to electrical before being transmitted to the measurement server
- LB (Light Beam unit) for probe alignment (measurement of the exact probe length and eccentricity)
- Test Arch for Device Under Test (DUT) testing
- DAE that reads the probe voltages and transmits them to the DASY PC. It is also used to detect probe touch and collision signals
- Device Holder for positioning the DUT beneath the phantom
- ANT (wideband Antenna) for broadcasting the downlink signals emitted by base station simulators (BSS) to the WD
- Operator PC for running the DASY software to define/execute the measurements.

The following components are needed for RFail measurements only:

- Modulation Interference Factor (MIF)
- Isotropic E-field, free-space probe (e.g., EF3DVx)
- Radiofrequency (RF) emission calibration dipoles for system check / validation purposes.

<EF3DV3 E-Field Probe Specification>

Construction	One dipole parallel, two dipoles normal to probe axis Interleaved sensors Built-in shielding against static charges PEEK enclosure material
Calibration	In air from 30 MHz to 6.0 GHz (absolute accuracy ±5.1%, k=2)
Frequency	30 MHz – 6 GHz Linearity: ±0.2 dB (100 MHz – 3 GHz)
Directivity	± 0.2 dB in air (rotation around probe axis) ± 0.4 dB in air (rotation normal to probe axis)
Dynamic Range	2 – >1000 V/m
Linearity	± 0.2 dB
Dimensions	Overall length: 337 mm (tip: 20 mm) Tip diameter: 3.9 mm (body: 12 mm) Distance from probe tip to dipole centers: 1.5 mm Sensor displacement to probe's calibration point: <0.7 mm

Voltage to E-field Conversion

The measured voltage is first linearized to a quantity proportional to the square of the E-field using the (a, b, c, d) set of parameters specific to the communication system and sensor：

$$\mathbf{V_{compi} = U_i + U_i^2 \cdot \frac{10^{\frac{d}{10}}}{dcp_i}}$$

where V_{compi} = compensated signal of channel i (μV) (i = x, y, z)
U_i = input signal of channel i (μV) (i = x, y, z)
d = PMR factor d (dB) (Probe parameter)
dcp_i = diode compression point of channel i (μV) (Probe parameter, i = x, y, z)

$$\mathbf{V_{compi\,dB\sqrt{\mu V}} = 10 + \log_{10}(V_{compi})}$$

$$\mathbf{corr_i = a_i \cdot e - \left(\frac{V_{compi\,dB\sqrt{\mu V}} - b_i}{C_i}\right)^2}$$

where $coor_i$ = correction factor of channel i (dB) (i = x, y, z)
$V_{compi\ dB\sqrt{\mu V}}$ = compensated voltage of channel i (dB√μV) (i = x, y, z)
a_i = PMR factor a of channel i (dB) (Probe parameter, i = x,y,z)
b_i = PMR factor b of channel i (dB√μV) (Probe parameter, i = x,y,z)
c_i = PMR factor c of channel i (Probe parameter, i = x,y,z)

The voltage $V_{idB\sqrt{\mu V}}$ is the linearized voltage in dB√μV：

$$\mathbf{V_{i\,dB\sqrt{\mu V}} = V_{compi\,dB\sqrt{\mu V}} - corr_i}$$

where $V_{i\ dB\sqrt{\mu V}}$ = linearized voltage of channel i (dB√μV) (i = x,y,z)
$V_{compi\ dB\sqrt{\mu V}}$ = compensated voltage of channel i (dB√μV) (i = x,y,z)
$Corr_i$ = correction factor of channel i (dB) (i = x,y,z)

Finally, the linearized voltage is converted in μV：

$$\mathbf{V_i = 10^{\frac{V_{i\,dB\sqrt{\mu V}}}{10}}}$$

where V_i = linearized voltage of channel i (μV) (i = x,y,z)
$V_{i\ dB\sqrt{\mu V}}$ = linearized voltage of channel i (dB√μV (i = x,y,z)

The E-field data for each channel are calculated using the linearized voltage：

E-field Probes：$$\mathbf{E_i = \sqrt{\frac{V_i}{Norm_i \cdot ConvF}}}$$

where V_i = compensated signal of channel i, (i = x, y, z)
$Norm_i$ = sensor sensitivity (μV/(V/m)^2 of channel i (i = x, y, z)
ConvF = sensitivity enhancement in solution
E_i = electric field strength of channel i in V/m

The RMS value of the field components gives the total field strength (Hermitian magnitude)：

$$\mathbf{E_{tot} = \sqrt{E_x^2 + E_y^2 + E_z^2}}$$

Averaged E-field Calculation

The averaged E-field is defined by

$$\mathbf{E_{avg} = \frac{1}{n} \cdot \sum_{i=1}^{n} E_i}$$

where n = = the number of measurement grid point
E_i = the E-field measured at point i

RFail Calculation

The RFail is finally computed with

$$\boldsymbol{RFail[dB(V/m)] = 20 \cdot \log_{10}(E_{avg}) + MIF}$$

where RFail = the Radio Frequency Audio Interference Level in dB(V/m)
E_{avg} = the averaged E-field in (V/m) calculated
MIF = the Modulation Interference Factor in dB.

7. RF Emissions Test Procedure

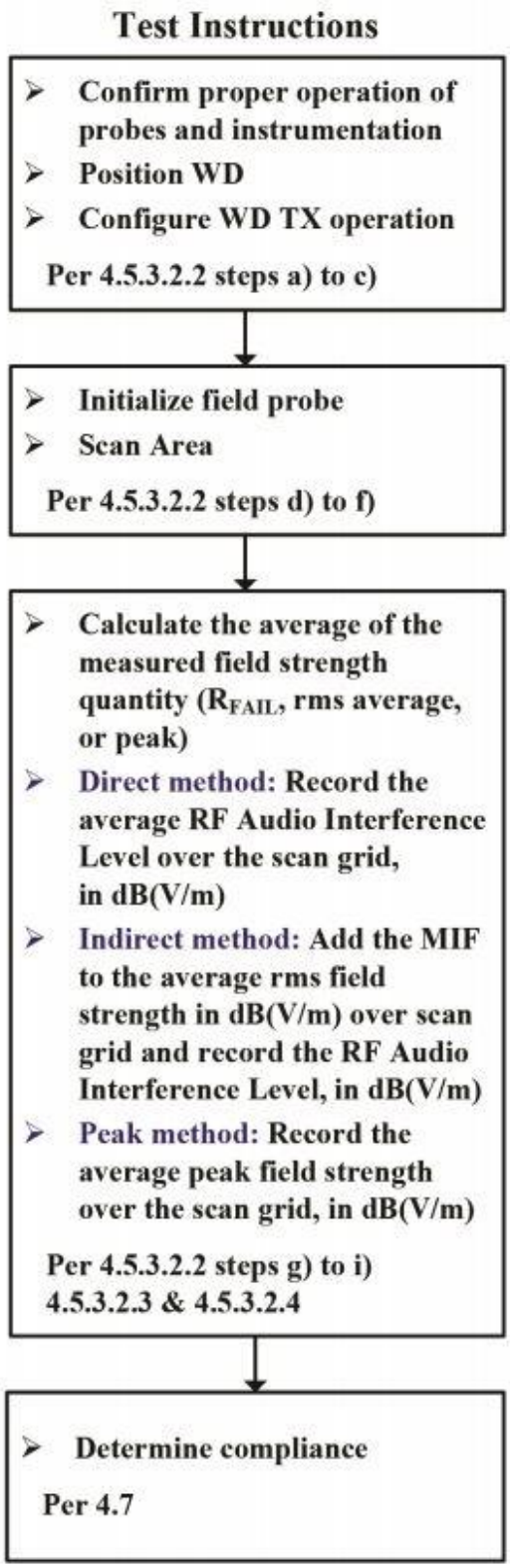

Figure of WD near-field emission scan flowchart according to ANSI C63.19:2019

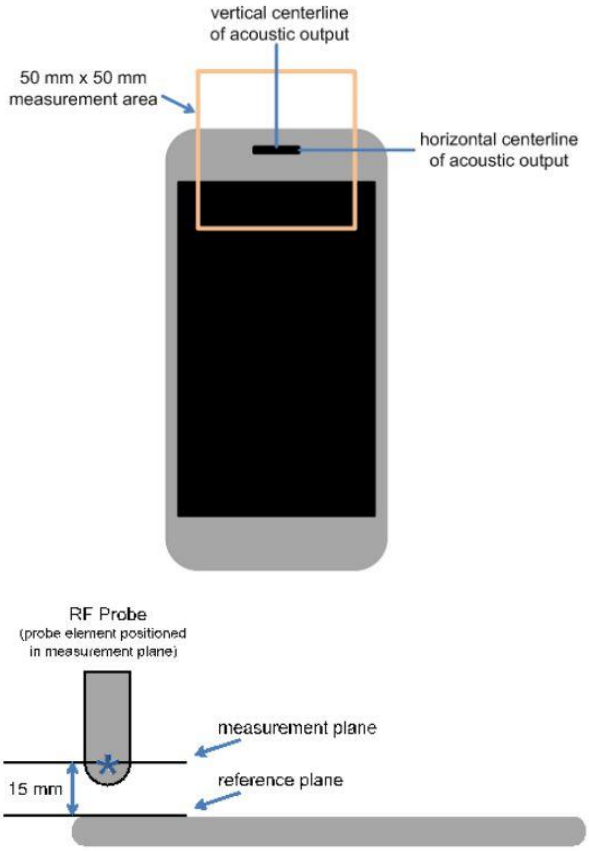

The references and reference plane that shall be used in the WD emissions measurement

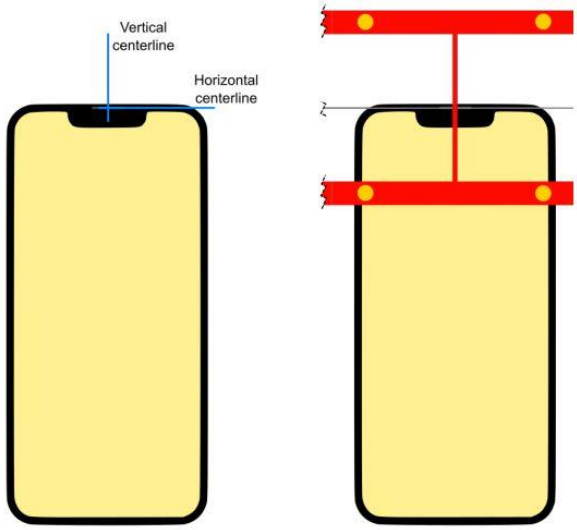

Device Under Test Positioning under the Test Arch

Test procedure: Indirect measurement—preferred

a. The measurement procedure using a probe and instrumentation chain with a response of <10 kHz (see ANSI C63.19-2019 section4.5.1) is identical to the direct measurement method of ANSI C63.19-2019 section4.5.3.2.2: however, because of the bandwidth limitations, it cannot include the direct use of the spectral and temporal weighting functions. The output of such measurement systems must be readings of steady state rms field strength in dB(V/m).

b. The RF audio interference level in dB(V/m) is obtained by adding the Modulation Interference Factor (in decibels) to the average steady state rms field strength reading over the measurement area, in dB(V/m), from Step c). Use this result to determine the WD's compliance per ANSI C63.19-2019 section4.7.

c. Scan the entire 50 mm by 50 mm measurement area in equally spaced step sizes and record the reading at each measurement point. The step size shall meet the specification for step size in ANSI C63.19:2019 section 4.5.3.

d. Calculate the average of the measurements taken in Step c

e. Convert the average value found in Step d) to RF audio interference level, in volts per meter, by taking the square root of the reading and then dividing it by the measurement system transfer function, as established in ANSI C63.19:2019 section4.5.3.2.1 pre-test procedure. Convert the result to dB(V/m) by taking the base-10 logarithm and multiplying it by 20. Expressed as a formula

RF audio interference level in db(V/M) $20 * \log(R_{ave}^{1/2} / TF)$

where

R_{ave} is the average reading

f. Compare this RF audio interference level to the limits in ANSI C63.19:2019 section4.7 and record the result

g. Per ANSI C63.19-2019 section4.6, WDs capable of operating multiple transmitters shall be subject to emissions requirements for all such transmitters expected to be operated when the WD is in voice mode operation positioned at a user's ear. Each qualified transmitter is tested individually using the method of Clause 4. Other WD transmitters shall be temporarily disabled or reduced in power level such that their average antenna input power is at least 6 dB lower than the average antenna input power of the transmitter under test. The transmitter under test is set to the fixed and repeatable combination of power and modulation characteristic that is representative of the worst case (highest interference potential) likely to be encountered while the WD is experiencing normal voice mode operation. The limiting measurement for device qualification is the highest RF audio interference potential measured for any of the WD transmitters. If the highest interference measurement is from a transmitter that is not required for normal voice mode operation, a secondary rating may be given that applies when that transmitter is disabled

8. Test Equipment List

Manufacturer	Name of Equipment	Type/Model	Serial Number	Calibration	
				Last Cal.	Due Date
SPEAG	2600Mhz Calibration Dipole	CD2600V3	1030	2022/6/29	2025/6/27
SPEAG	3500Mhz Calibration Dipole	CD3500V3	1020	2022/6/29	2025/6/27
SPEAG	Data Acquisition Electronics	DAE4	1691	2024/4/19	2025/4/18
SPEAG	Isotropic E-Field Probe	EF3DV3	4050	2024/3/6	2025/3/5
R&S	Base Station	CMW500	143030	2024/7/4	2025/7/3
Anritsu	Vector Signal Generator	MG3710A	6201682672	2024/1/2	2025/1/1
BONN	POWER AMPLIFIER	BLMA 0830-3	087193A	NA	NA
BONN	POWER AMPLIFIER	BLMA 2060-2	087193B	NA	NA
Agilent	Dual Directional Coupler	778D	20500	2024/7/4	2025/7/3
Agilent	Dual Directional Coupler	11691D	MY48151020	2024/7/4	2025/7/3
Rohde & Schwarz	Power Meter	NRVD	102081	2024/7/4	2025/7/3
Rohde & Schwarz	Power Sensor	NRV-Z5	100538	2024/7/4	2025/7/3
Rohde & Schwarz	Power Sensor	NRV-Z5	100539	2024/7/4	2025/7/3
MCL	Attenuation1	BW-S10W5+	N/A	NA	NA
MCL	Attenuation2	BW-S10W5+	N/A	NA	NA
MCL	Attenuation3	BW-S10W5+	N/A	NA	NA
Rohde & Schwarz	Spectrum Analyzer	FSV7	101631	2024/10/11	2025/10/10
Testo	Thermo-Hygrometer	HTC-1	55013	2024/1/4	2025/1/3
SPEAG	Test Arch Phantom	N/A	N/A	NCR	NCR
SPEAG	Phone Positioner	N/A	N/A	NCR	NCR

Note:

1. NCR: “No-Calibration Required”
2. The dipole calibration interval can be extended to 3 years with justification. The dipoles are also not physically damaged, or repaired during the interval. The justification data in appendix C can be found which the return loss is < -20dB, within 20% of prior calibration, the impedance is within 5 ohm of prior calibration for each dipole.

9. System Validation

Obtaining accurate measurements and relevant quantities in Module HAC depends on the proper functioning of many components and the correct parameter settings. Faulty results due to drift, failures, or incorrect parameters might not be recognized, as the differences might not be obvious in the measurements.
SPEAG DASY incorporates a system check, also called system verification procedure, to test for the proper functioning of the system based on the tests described in ANSI C63.19-2019: the RF interference potential test setup is verified with RF Emission Calibration Dipoles.

<Test Setup>

1. Set the RF signal generator for either CW. Set its output power so the peak power applied to the antenna is equal to that recorded for the real or emulated signal using the WD modulation format
2. Average input power P = 100 mW (20 dBm) after adjustment for return loss. An input power that generates field levels similar to those from the WD or other suitable level may also be used
3. The test fixture should meet the two-wavelength separation criterion
4. The probe-to-dipole separation, which is measured from closest surface of the dipole to the center point of the probe sensor element, should be 15 mm

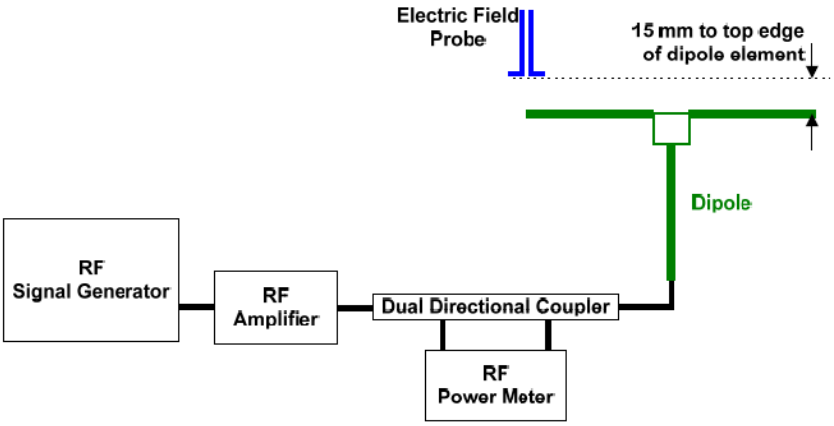

Figure of Setup Diagram

<Validation Procedure>

Place a dipole antenna meeting the requirements given in ANSI C63.19: 2019 D.11 in the position normally occupied by the WD. The dipole antenna serves as a known source for an electrical and magnetic output. Position the E-field probe so that:

a. The probe and its cable are parallel to the coaxial feed of the dipole antenna
b. The probe cable and the coaxial feed of the dipole antenna approach the measurement area from opposite directions; and
c. The center point of the probe element(s) is 15 mm from the closest surface of the dipole elements

Scan the length of the dipole with the E-field probe and record the two maximum values found near the dipole ends. Average the two readings and compare the reading to expected value in the calibration certificate or expected value in this standard.

Frequency (MHz)	Input Power (dBm)	Target Value (V/m)	Emax (V/m)	Deviation (%)	Date
2600	20	86	89.4	3.95%	2024/10/19
3500	20	83.6	88.1	5.38%	2024/10/19

10. Modulation Interference Factor

For any specific fixed and repeatable modulated signal, a Modulation Interference Factor (MIF, expressed in decibels) may be developed that relates its interference potential to its steady state rms signal level or average power level. This factor is a function only of the audio frequency amplitude modulation characteristics of the signal and is the same for field strength or conducted power measurements. It is important to emphasize that the MIF is valid only for a specific repeatable audio frequency amplitude modulation characteristic. Any change in modulation characteristic requires determination and application of a new MIF.
MIF may be determined using a radiated RF field, a conducted RF signal, or, in a preliminary stage, a mathematical analysis of a modeled RF signal.

a. Verify the slope accuracy and dynamic range capability over the desired operating frequency band of a fast probe or sensor, square-law detector, as specified in ANSI C63.19: 2019 D.3, and weighting system as specified in ANSI C63.19: 2019 D.4 and ANSI C63.19: 2019 D.5. For the probe and instrumentation included in the measurement of MIF, additional calibration and application of calibration factors are not required.
b. Using RF illumination, or conducted coupling, apply the specific modulated signal in question to the measurement system at a level within its confirmed operating dynamic range
c. Measure the steady-state rms level at the output of the fast probe or sensor
d. Measure the steady-state average level at the weighting output
e. Without changing the square-law detector or weighting system, and using RF illumination, or conducted coupling, substitute for the specific modulated signal a 1 kHz, 80% amplitude modulated carrier at the same frequency and adjust its strength until the level at the weighting output equals the Step d) measurement
f. Without changing the carrier level from Step e), remove the 1 kHz modulation and again measure the steady-state rms level indicated at the output of the fast probe or sensor.
g. The MIF for the specific modulation characteristic is given by the ratio of the Step f) measurement to the Step c) measurement, expressed in decibels (20*log(step6/step3)

In practice, Step e) and Step f) need not be repeated for each MIF determination if the relationship between the two measurements has been pre-established for the measurement system over the operating frequency and dynamic ranges. In such cases, only the modulation characteristic being tested needs to be available during WD testing
Since indirect measurement procedure was using for RF audio interference power level evaluation, the MIF values applied in this test report were provided by the HAC equipment provider of SPEAG, and the worst values for all air interface are listed below to be determine the Wireless device RF audio interference power level.

UID	Communication System Name	MIF(dB)
10460	UMTS-FDD(WCDMA, AMR)	-25.43
10225	UMTS-FDD (HSPA+)	-20.39
10170	LTE-FDD(SC-FDMA,1RB,20MHz,16-QAM)	-9.76
10173	LTE-TDD (SC-FDMA, 1 RB, 20 MHz, 16-QAM)	-1.44
10769	5G NR (CP-OFDM, 1 RB, 15 MHz, QPSK, 15 kHz)	-12.08
10973	5G NR (DFT-s-OFDM, 1 RB, 100 MHz, QPSK, 30 kHz)	-1.64
10061	IEEE 802.11b WiFi 2.4 GHz (DSSS, 11 Mbps)	-2.02
10077	IEEE 802.11g WiFi 2.4 GHz (DSSS/OFDM, 54 Mbps)	0.12
10427	IEEE 802.11n (HT Greeneld, 150 Mbps, 64-QAM)	-13.44
10069	IEEE 802.11a/h WiFi 5 GHz (OFDM, 54 Mbps)	-3.15
10616	IEEE 802.11ac WiFi (40MHz, MCS0, 90pc duty cycle)	-5.57
10671	IEEE 802.11ax (20MHz, MCS0, 90pc duty cycle)	-5.58

11. Evaluation of WD RF interference potential

General Note:

1. In this report, max conducted power from each air interface was first used to evaluate whether it complies with ANSI C63.19-2019 Table 4.1 RF_{AIPL}, compliance with table 4.1 means compliance with WD emission requirements. the RF_{AIPL} evaluation refer to section 11.1 for detail.
2. If there some air interface were not meet ANSI C63.19-2019 table 4.1 requirement, these air interfaces were further evaluation ANSI C63.19-2019 Table 4.3 RFAIL requirement. And the RFAIL evaluation result refer to section 13.

11.1 Evaluation RF_{AIPL}

<WWAN Max Tune-up Limit>

<Ant0>

Frequency Band		Average Power (dBm)
WCDMA	Band V	25.00
	HSPA	24.00
FDD LTE	Band 5	25.00
	Band 12	25.00
	Band 13	25.00
	Band 14	25.00
	Band 17	25.00
	Band 26	25.00
	Band 71	24.00
5G NR FDD	n5	25.00
	n12	25.00
	n13	25.00
	n14	25.00
	n26	25.00
	n71	24.00
5G NR TDD Duty(100%)	n41	24.00
	n41_PC2	26.00

<Ant2>

Frequency Band		Average Power (dBm)
WCDMA	Band IV	25.00
	Band II	25.00
	HSPA	24.00
FDD LTE	Band 2	25.00
	Band 4	25.00
	Band 25	25.00
	Band 66	25.00
5G NR FDD	n2	25.00
	n25	25.00
	n66	25.00
5G NR TDD Duty(100%)	n77 Part27O	23.00
	n77 Part27Q	23.00
	n78 Part27O	23.00
	n78 Part27Q	22.00
	n77 Part96	23.00
	n78 Part96	23.00
	n77 Part27O_PC2	26.00
	n77 Part27Q_PC2	25.00
	n78 Part27O_PC2	25.00
	n78 Part27Q_PC2	24.00

<Ant3>

Frequency Band		Average Power (dBm)
FDD LTE	Band 7	24.00
	Band 30	25.00
TDD LTE	Band 38	24.00
	Band 41	24.00
	Band 41-HPUE	27.00
5G NR FDD	n7	24.00
	n30	25.00
5G NR TDD Duty(100%)	n38	24.00
	n41	24.00
	n77 Part27O	24.00
	n77 Part27Q	23.00
	n78 Part27O	23.00
	n78 Part27Q	22.00
	n77 Part96	24.00
	n78 Part96	24.00
	n41_PC2	27.00
	n77 Part27O_PC2	25.00
	n77 Part27Q_PC2	25.00
	n78 Part27O_PC2	25.00
	n78 Part27Q_PC2	24.00

<Ant4>

Frequency Band		Average Power (dBm)
TDD LTE	Band 48	23.00
5G NR TDD Duty(100%)	n48	23.00
	n77 Part27O	24.00
	n77 Part27Q	24.00
	n78 Part27O	24.00
	n78 Part27Q	24.00
	n77 Part96	24.00
	n78 Part96	24.00
	n77 Part27O_PC2	27.00
	n77 Part27Q_PC2	27.00
	n78 Part27O_PC2	27.00
	n78 Part27Q_PC2	27.00

<Ant5>

Frequency Band		Average Power (dBm)
FDD LTE	Band 2	25.00
	Band 4	25.00
	Band 66	25.00
5G NR FDD	n25	25.00
	n66	25.00
5G NR TDD Duty(100%)	n41	23.00
	n41_PC2	25.00

<Ant6>

Frequency Band		Average Power (dBm)
5G NR TDD Duty(100%)	n41	23.00
	n77 Part27O	23.00
	n77 Part27Q	23.00
	n78 Part27O	23.00
	n78 Part27Q	23.00
	n77 Part96	23.00
	n78 Part96	23.00
	n41_PC2	25.00
	n77 Part27O_PC2	26.00
	n77 Part27Q_PC2	26.00
	n78 Part27O_PC2	26.00
	n78 Part27Q_PC2	26.00

<Ant4+6>

Frequency Band		Average Power (dBm)
5G NR TDD Duty(100%)	n77 UL MIMO Ant4+6	26.00
	n78 UL MIMO Ant4+6	26.00

<WLAN Max Tune-up Limit>

Frequency Band		Average Power (dBm)
2.4GHz WLAN Ant 7+9	802.11b	24.00
	802.11g	23.50
	802.11n-HT20	22.30
	802.11ac-VHT20	22.80
	802.11ax-HE20	22.80
5GHz WLAN Ant 8+10	802.11a	24.30
	802.11n-HT20	23.00
	802.11n-HT40	22.30
	802.11ac-VHT20	23.00
	802.11ac-VHT40	22.30
	802.11ac-VHT80	22.00
	802.11ac-VHT160	21.00
	802.11ax-HE20	23.00
	802.11ax-HE40	22.30
	802.11ax-HE80	22.00
	802.11ax-HE160	21.60
6GHz WLAN Ant 8+10	802.11a	18.50
	802.11ax-HE20	18.50
	802.11ax-HE40	18.50

<Evaluation RF audio interference power level>

General Note:

1. Use maximum power plus worst case MIF to determine whether it complies with RF_{AIPL}
2. If maximum power plus worst case MIF does not complies with RF_{AIPL}, then further evaluation RF_{AIL} include in section 13.
3. According to ANSI C63.19 2019, if maximum power plus worst case MIF is complies with RF_{AIPL}, means compliance with WD emission requirements.

<Ant0>

Air Interface	Max Average Antenna Input Power (dBm)	Worst Case MIF (dB)	Power + MIF (dBm)	C63.19 Lowest RFAIPL (dBm)	C63.19 test required(2019)
WCDMA	25.00	-25.43	-0.43	26	No
WCDMA - HSPA	24.00	-20.39	3.61	26	No
LTE - FDD	25.00	-9.76	15.24	25	No
5G FR1 - FDD	25.00	-12.08	12.92	25	No
5G NR - TDD PC3	24.00	-1.64	22.36	25	No
5G NR - TDD PC2	26.00	-1.64	24.36	25	No

<Ant2>

Air Interface	Max Average Antenna Input Power (dBm)	Worst Case MIF (dB)	Power + MIF (dBm)	C63.19 Lowest RFAIPL (dBm)	C63.19 test required(2019)
WCDMA	25.00	-25.43	-0.43	26	No
WCDMA - HSPA	24.00	-20.39	3.61	26	No
LTE - FDD	25.00	-9.76	15.24	25	No
5G FR1 - FDD	25.00	-12.08	12.92	25	No
5G NR - TDD PC3	23.00	-1.64	21.36	25	No
5G NR - TDD PC2	26.00	-1.64	24.36	25	No

<Ant3>

Air Interface	Max Average Antenna Input Power (dBm)	Worst Case MIF (dB)	Power + MIF (dBm)	C63.19 Lowest RFAIPL (dBm)	C63.19 test required(2019)
LTE - FDD	25.00	-9.76	15.24	25	No
LTE – TDD PC3	24.00	-1.44	22.56	25	No
LTE – TDD-PC2	27.00	-1.44	25.56	25	Yes
5G FR1 - FDD	25.00	-12.08	12.92	25	No
5G NR - TDD PC3	24.00	-1.64	22.36	25	No
5G NR - TDD PC2	27.00	-1.64	25.36	25	Yes

<Ant4>

Air Interface	Max Average Antenna Input Power (dBm)	Worst Case MIF (dB)	Power + MIF (dBm)	C63.19 Lowest RFAIPL (dBm)	C63.19 test required(2019)
LTE – TDD	23.00	-1.44	21.56	25	No
5G NR - TDD PC3	24.00	-1.64	22.36	25	No
5G NR - TDD PC2	27.00	-1.64	25.36	25	Yes

<Ant5>

Air Interface	Max Average Antenna Input Power (dBm)	Worst Case MIF (dB)	Power + MIF (dBm)	C63.19 Lowest RFAIPL (dBm)	C63.19 test required(2019)
LTE - FDD	25.00	-9.76	15.24	25	No
5G FR1 - FDD	25.00	-12.08	12.92	25	No
5G NR - TDD PC3	23.00	-1.64	21.36	25	No
5G NR - TDD PC2	25.00	-1.64	23.36	25	No

<Ant6>

Air Interface	Max Average Antenna Input Power (dBm)	Worst Case MIF (dB)	Power + MIF (dBm)	C63.19 Lowest RFAIPL (dBm)	C63.19 test required(2019)
5G NR - TDD PC3	23.00	-1.64	21.36	25	No
5G NR - TDD PC2	26.00	-1.64	24.36	25	No

<Ant4+6>

Air Interface	Max Average Antenna Input Power (dBm)	Worst Case MIF (dB)	Power + MIF (dBm)	C63.19 Lowest RFAIPL (dBm)	C63.19 test required(2019)
5G NR - TDD UL MIMO	26.00	-1.64	24.36	25	No

<WLAN Ant>

Air Interface		Max Average Antenna Input Power (dBm)	Worst Case MIF (dB)	Power + MIF (dBm)	C63.19 Lowest RFAIPL (dBm)	C63.19 test required(2019)
2.4GHz WLAN	802.11b	24.00	-2.02	21.98	25	No
	802.11g	23.50	0.12	23.62	25	No
	802.11n-HT20	22.30	-13.44	8.86	25	No
	802.11ac-VHT20	22.80	-5.57	17.23	25	No
	802.11ax-HE20	22.80	-5.58	17.22	25	No
5GHz WLAN	802.11a	24.30	-3.15	21.15	25	No
	802.11n-HT20	23.00	-13.44	9.56	25	No
	802.11n-HT40	22.30	-13.44	8.86	25	No
	802.11ac-VHT20	23.00	-5.57	17.43	25	No
	802.11ac-VHT40	22.30	-5.57	16.73	25	No
	802.11ac-VHT80	22.00	-5.57	16.43	25	No
	802.11ac-VHT160	21.00	-5.57	15.43	25	No
	802.11ax-HE20	23.00	-5.58	17.42	25	No
	802.11ax-HE40	22.30	-5.58	16.72	25	No
	802.11ax-HE80	22.00	-5.58	16.42	25	No
	802.11ax-HE160	21.60	-5.58	16.02	25	No
6GHz WLAN	802.11a	18.50	-3.15	15.35	25	No
	802.11ax-HE20	18.50	-5.58	12.92	25	No
	802.11ax-HE40	18.50	-5.58	12.92	25	No

12. Conducted RF Output Power (Unit: dBm)

<LTE>

Band 41 HPUE Ant 3 Default								
BW [MHz]	Modulation	RB Size	RB Offset	Power Low Ch. / Freq.	Power Low Ch. / Freq.	Power Middle Low Ch. / Freq.	Power Middle High Ch. / Freq.	Power High Ch. / Freq.
Channel				39750	40185	40620	41055	41490
Frequency (MHz)				2506	2549.5	2593	2636.5	2680
20	QPSK	1	0	25.95	25.90	26.04	25.96	25.97

<5GNR>

n41 PC2 Ant 3 Default						
BW [MHz]	Modulation	RB Size	RB Offset	Power Low Ch. / Freq.	Power Middle Ch. / Freq.	Power High Ch. / Freq.
Channel				509202	518598	528000
Frequency (MHz)				2546.01	2592.99	2640
100	QPSK	1	1	25.34	25.45	25.38

Part27O n77 PC2 Ant 4 Default						
BW [MHz]	Modulation	RB Size	RB Offset	Power Low Ch. / Freq.	Power Middle Ch. / Freq.	Power High Ch. / Freq.
Channel				650000	656000	662000
Frequency (MHz)				3750	3840	3930
100	QPSK	1	1	26.07	26.15	26.09

Part27Q n77 PC2 Ant 4 Default						
BW [MHz]	Modulation	RB Size	RB Offset	Power Low Ch. / Freq.	Power Middle Ch. / Freq.	Power High Ch. / Freq.
Channel					633334	
Frequency (MHz)					3500.01	
100	QPSK	1	1		26.02	

Part27O n78 PC2 Ant 4 Default						
BW [MHz]	Modulation	RB Size	RB Offset	Power Low Ch. / Freq.	Power Middle Ch. / Freq.	Power High Ch. / Freq.
Channel					650000	
Frequency (MHz)					3750	
100	QPSK	1	1		26.08	

Part27Q n78 PC2 Ant 4 Default						
BW [MHz]	Modulation	RB Size	RB Offset	Power Low Ch. / Freq.	Power Middle Ch. / Freq.	Power High Ch. / Freq.
Channel					633334	
Frequency (MHz)					3500.01	
100	QPSK	1	1		25.88	

13. RF_{AIL} Test Results

General Note:

1. The HAC measurement system applies MIF value onto the measured RMS E-field, which is indirect method in ANSI C63.19-2019 version, and reports the RF audio interference level.
2. Phone Condition: Mute on; Backlight off; Max Volume.
3. Since the LTE B41 and NR n41/77 power class 3 maximum power plus MIF is complies with ANSI63.19-2019 Table 4.1 RF_{AIPL}, therefore, only power class2 evaluated RF_{AIL}.

Plot No.	Air Interface	Modulation / Mode	Channel	Transmit Ant.	Average Antenna Input Power (dBm)	MIF	RF_{AIL} (dBV/m)
1	LTE Band 41_HPUE	20M_QPSK_1_0	39750	Ant3	25.95	-1.44	26.41
2	LTE Band 41_HPUE	20M_QPSK_1_0	40185	Ant3	25.90	-1.44	25.93
3	LTE Band 41_HPUE	20M_QPSK_1_0	40620	Ant3	26.04	-1.44	25.23
4	LTE Band 41_HPUE	20M_QPSK_1_0	41055	Ant3	25.96	-1.44	23.57
5	LTE Band 41_HPUE	20M_QPSK_1_0	41490	Ant3	25.97	-1.44	23.77
6	FR1 n41 HPUE	100M_QPSK_1_1	509202	Ant3	25.34	-1.64	25.80
7	FR1 n41 HPUE	100M_QPSK_1_1	518598	Ant3	25.45	-1.64	25.80
8	FR1 n41 HPUE	100M_QPSK_1_1	528000	Ant3	25.38	-1.64	24.80
9	FR1 n77 27O HPUE	100M_QPSK_1_1	650000	Ant4	26.07	-1.64	23.90
10	FR1 n77 27O HPUE	100M_QPSK_1_1	656000	Ant4	26.15	-1.64	25.29
11	FR1 n77 27O HPUE	100M_QPSK_1_1	662000	Ant4	26.09	-1.64	25.24
12	FR1 n77 27Q HPUE	100M_QPSK_1_1	633334	Ant4	26.02	-1.64	25.93

Test Engineer： Martin Li, Varus Wang, Light Wang

14. Uncertainty Assessment

The component of uncertainly may generally be categorized according to the methods used to evaluate them. The evaluation of uncertainly by the statistical analysis of a series of observations is termed a Type A evaluation of uncertainty. The evaluation of uncertainty by means other than the statistical analysis of a series of observation is termed a Type B evaluation of uncertainty. Each component of uncertainty, however evaluated, is represented by an estimated standard deviation, termed standard uncertainty, which is determined by the positive square root of the estimated variance.
The combined standard uncertainty of the measurement result represents the estimated standard deviation of the result. It is obtained by combining the individual standard uncertainties of both Type A and Type B evaluation using the usual “root-sum-squares” (RSS) methods of combining standard deviations by taking the positive square root of the estimated variances. Expanded uncertainty is a measure of uncertainty that defines an interval about the measurement result within which the measured value is confidently believed to lie. It is obtained by multiplying the combined standard uncertainty by a coverage factor. For purpose of this document, a coverage factor two is used, which corresponds to confidence interval of about 95 %. The DASY uncertainty Budget is showed below Table.
The judgment of conformity in the report is based on the measurement results excluding the measurement uncertainty.

Error Description	Uncertainty Value (±%)	Probability Distribution	Divisor	Ci (Eav)	Standard Uncertainty (E) (±%)
Measurement System					
Probe Calibration	5.1	Normal	1	1	5.1
Axial Isotropy	4.7	Rectangular	√3	1	2.7
Sensor Displacement	7.2	Rectangular	√3	0.5	2.1
Boundary Effects	2.4	Rectangular	√3	1	1.4
Phantom Boundary Effects	7.2	Rectangular	√3	1	4.2
Linearity	4.7	Rectangular	√3	1	2.7
Scaling with PMR Calibration	10.0	Rectangular	√3	1	5.8
System Detection Limit	1.0	Rectangular	√3	1	0.6
Readout Electronics	0.3	Normal	1	1	0.3
Response Time	0.8	Rectangular	√3	0	0.0
Integration Time	2.6	Rectangular	√3	0	0.0
RF Ambient Conditions	3.0	Rectangular	√3	1	1.7
RF Reflections	12.0	Rectangular	√3	1	6.9
Probe Positioner	1.2	Rectangular	√3	1	0.7
Probe Positioning	3.0	Rectangular	√3	1	1.7
Extrap. and Interpolation	1.0	Rectangular	√3	1	0.6
Test Sample Related					
Device Positioning Vertical	4.7	Rectangular	√3	1	2.7
Device Positioning Lateral	1.0	Rectangular	√3	1	0.6
Device Holder and Phantom	2.4	Rectangular	√3	1	1.4
Power Drift	5.0	Rectangular	√3	1	2.9
Phantom and Setup Related					
Phantom Thickness	2.4	Rectangular	√3	1	1.4
Combined Std. Uncertainty					13.1%
Coverage Factor for 95 %					K=2
Expanded STD Uncertainty					26.3%
Declaration of Conformity: The test results with all measurement uncertainty excluded are presented in accordance with the regulation limits or requirements declared by manufacturers.					
Comments and Explanations: The declared of product specification for EUT presented in the report are provided by the manufacturer, and the manufacturer takes all the responsibilities for the accuracy of product specification.					

Uncertainty Budget of HAC free field assessment

15. References

[1] ANSI C63.19:2019, “American National Standard for Methods of Measurement of Compatibility between Wireless Communications Devices and Hearing Aids”, Aug. 2019.

[2] FCC KDB 285076 D01v06r04, “Equipment Authorization Guidance for Hearing Aid Compatibility”, Sep 2023.

[3] FCC KDB 285076 D03v01r06, “Hearing aid compatibility frequently asked questions”, Jul. 2022

[4] SPEAG DASY System Handbook