#01_WCDMA II_RMC 12.2Kbps_Bottom Face_0mm_Ch9262

Communication System: WCDMA ; Frequency: 1852.4 MHz;Duty Cycle: 1:1
Medium: HSL_1900_200824 Medium parameters used : f = 1852.4 MHz; σ = 1.331 S/m; ε_r = 39.26; ρ = 1000 kg/m^3
Ambient Temperature：23.5 ℃; Liquid Temperature：22.5 ℃

DASY5 Configuration:
- Probe: EX3DV4 - SN7306; ConvF(8.06, 8.06, 8.06) @ 1852.4 MHz; Calibrated: 2020/7/24
- Sensor-Surface: 1.4mm (Mechanical Surface Detection)
- Electronics: DAE4 Sn1424; Calibrated: 2020/1/24
- Phantom: ELI v5.0; Type: QDOVA002AA; Serial: 1131
- Measurement SW: DASY52, Version 52.10 (4);SEMCAD X Version 14.6.14 (7483)

Area Scan (81x101x1): Interpolated grid: dx=1.500 mm, dy=1.500 mm
Maximum value of SAR (interpolated) = 2.23 W/kg

Zoom Scan (5x5x7)/Cube 0: Measurement grid: dx=8mm, dy=8mm, dz=5mm
Reference Value = 28.46 V/m; Power Drift = -0.01 dB
Peak SAR (extrapolated) = 2.49 W/kg
SAR(1 g) = 1.09 W/kg; SAR(10 g) = 0.509 W/kg
Maximum value of SAR (measured) = 2.00 W/kg

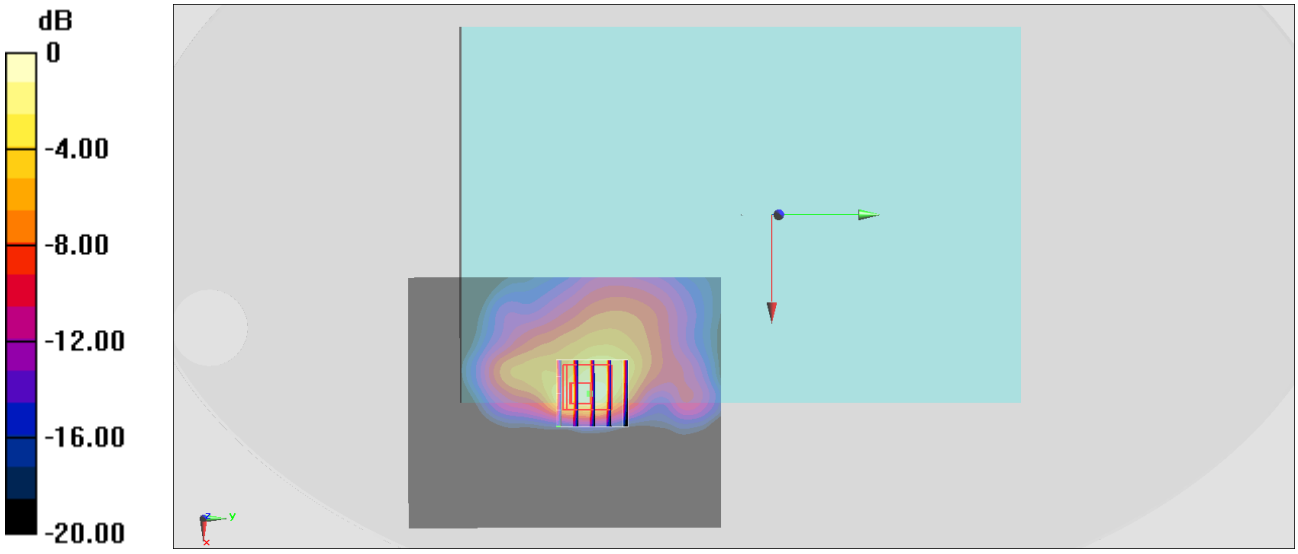

0 dB = 2.00 W/kg = 3.01 dBW/kg

#02_WCDMA IV_RMC 12.2Kbps_Edge 1_0mm_Ch1413

Communication System: WCDMA ; Frequency: 1732.6 MHz;Duty Cycle: 1:1
Medium: HSL_1750_200902 Medium parameters used: f = 1733 MHz; σ = 1.352 S/m; ε_r = 40.619; ρ = 1000 kg/m^3
Ambient Temperature：23.4 ℃; Liquid Temperature：22.4 ℃

DASY5 Configuration:
- Probe: EX3DV4 - SN3925; ConvF(8.7, 8.7, 8.7) @ 1732.6 MHz; Calibrated: 2019/9/20
- Sensor-Surface: 1.4mm (Mechanical Surface Detection)
- Electronics: DAE4 Sn1424; Calibrated: 2020/1/24
- Phantom: ELI v5.0; Type: QDOVA002AA; Serial: 1131
- Measurement SW: DASY52, Version 52.10 (4);SEMCAD X Version 14.6.14 (7483)

Area Scan (81x101x1): Interpolated grid: dx=1.500 mm, dy=1.500 mm
Maximum value of SAR (interpolated) = 1.85 W/kg

Zoom Scan (5x5x7)/Cube 0: Measurement grid: dx=8mm, dy=8mm, dz=5mm
Reference Value = 32.37 V/m; Power Drift = -0.07 dB
Peak SAR (extrapolated) = 2.45 W/kg
SAR(1 g) = 0.921 W/kg; SAR(10 g) = 0.378 W/kg
Maximum value of SAR (measured) = 1.88 W/kg

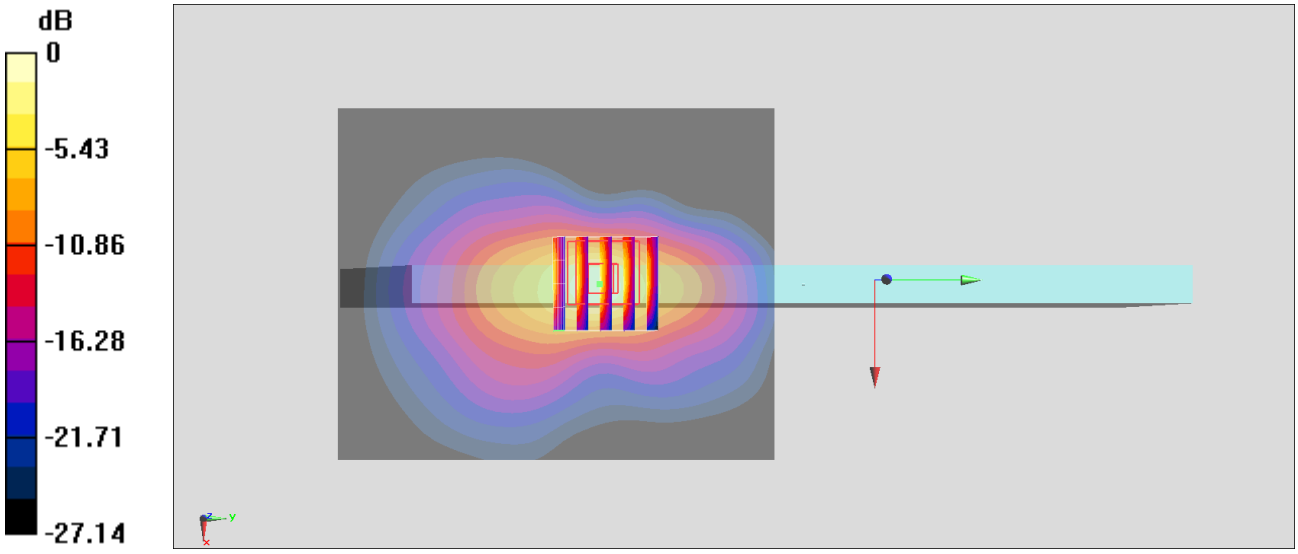

0 dB = 1.88 W/kg = 2.74 dBW/kg

#03_WCDMA V_RMC 12.2Kbps_Bottom Face_0mm_Ch4132

Communication System: WCDMA ; Frequency: 826.4 MHz;Duty Cycle: 1:1
Medium: HSL_850_200826 Medium parameters used : f = 826.4 MHz; σ = 0.891 S/m; ε_r = 42.584; ρ = 1000 kg/m^3
Ambient Temperature：23.5 ℃; Liquid Temperature：22.5 ℃

DASY5 Configuration:
- Probe: EX3DV4 - SN7306; ConvF(9.61, 9.61, 9.61) @ 826.4 MHz; Calibrated: 2020/7/24
- Sensor-Surface: 1.4mm (Mechanical Surface Detection)
- Electronics: DAE4 Sn1424; Calibrated: 2020/1/24
- Phantom: ELI v5.0; Type: QDOVA002AA; Serial: 1131
- Measurement SW: DASY52, Version 52.10 (4);SEMCAD X Version 14.6.14 (7483)

Area Scan (81x101x1): Interpolated grid: dx=1.500 mm, dy=1.500 mm
Maximum value of SAR (interpolated) = 1.67 W/kg

Zoom Scan (5x5x7)/Cube 0: Measurement grid: dx=8mm, dy=8mm, dz=5mm
Reference Value = 35.92 V/m; Power Drift = -0.10 dB
Peak SAR (extrapolated) = 2.24 W/kg
SAR(1 g) = 0.987 W/kg; SAR(10 g) = 0.513 W/kg
Maximum value of SAR (measured) = 1.76 W/kg

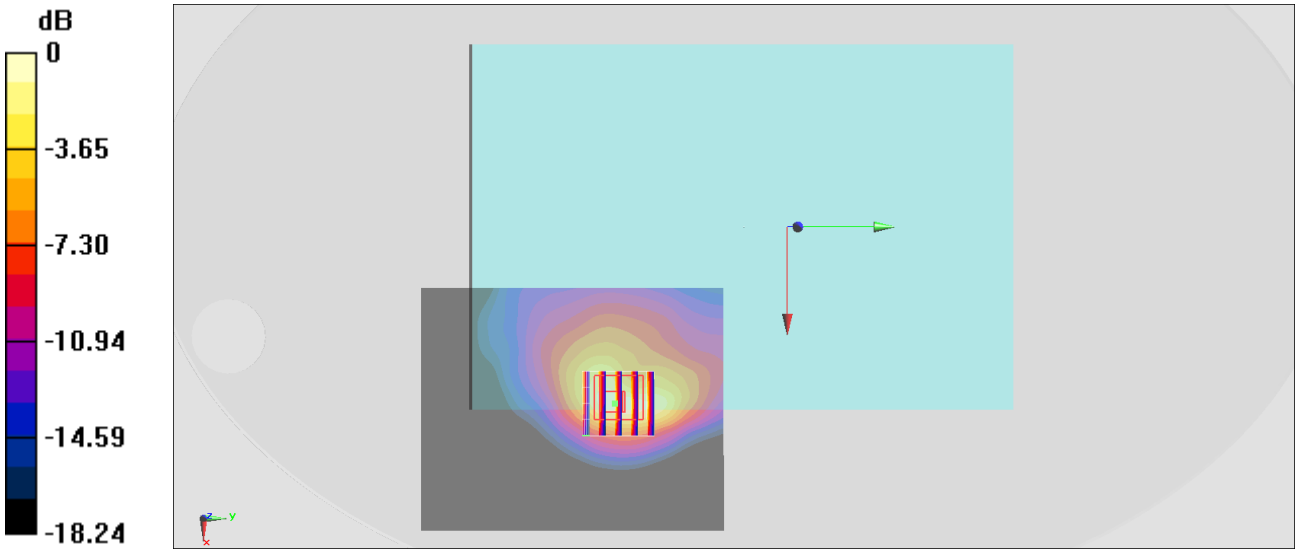

0 dB = 1.76 W/kg = 2.46 dBW/kg

#04_LTE Band 7_20M_QPSK_1_0_Edge 1_0mm_Ch21350

Communication System: LTE ; Frequency: 2560 MHz;Duty Cycle: 1:1
Medium: HSL_2600_200831 Medium parameters used: f = 2560 MHz; σ = 1.927 S/m; ε_r = 39.142; ρ = 1000 kg/m^3
Ambient Temperature：23.4 ℃; Liquid Temperature：22.4 ℃

DASY5 Configuration:
- Probe: EX3DV4 - SN3925; ConvF(7.5, 7.5, 7.5) @ 2560 MHz; Calibrated: 2019/9/20
- Sensor-Surface: 1.4mm (Mechanical Surface Detection)
- Electronics: DAE4 Sn1424; Calibrated: 2020/1/24
- Phantom: ELI v5.0; Type: QDOVA002AA; Serial: 1131
- Measurement SW: DASY52, Version 52.10 (4);SEMCAD X Version 14.6.14 (7483)

Area Scan (81x121x1): Interpolated grid: dx=1.200 mm, dy=1.200 mm
Maximum value of SAR (interpolated) = 1.73 W/kg

Zoom Scan (7x7x7)/Cube 0: Measurement grid: dx=5mm, dy=5mm, dz=5mm
Reference Value = 10.70 V/m; Power Drift = -0.06 dB
Peak SAR (extrapolated) = 2.20 W/kg
SAR(1 g) = 0.966 W/kg; SAR(10 g) = 0.402 W/kg
Maximum value of SAR (measured) = 1.71 W/kg

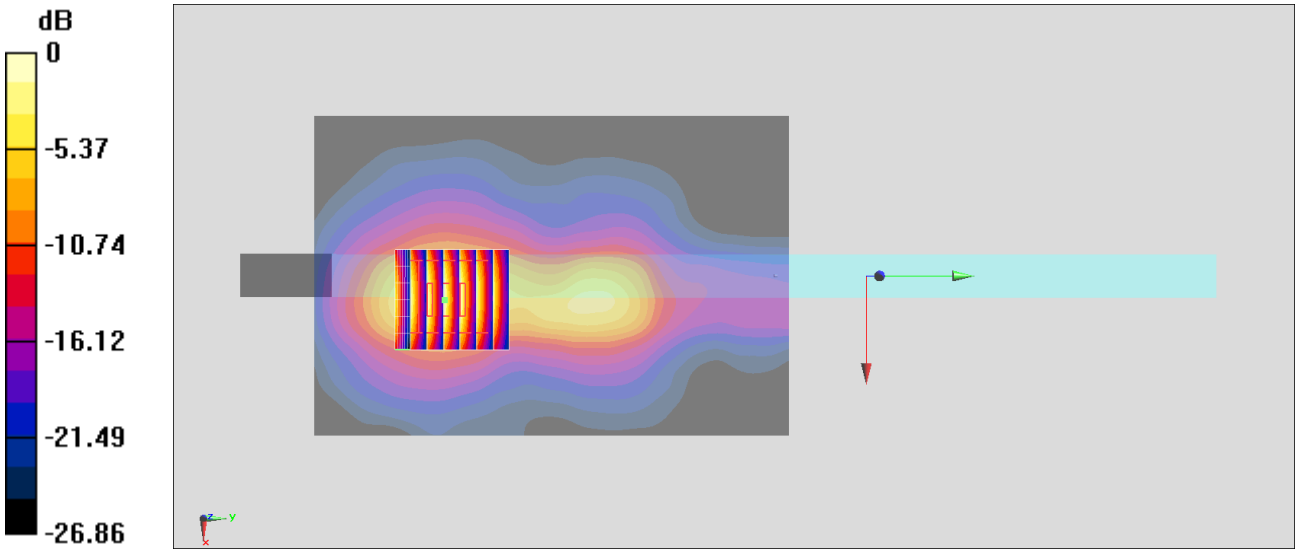

0 dB = 1.71 W/kg = 2.33 dBW/kg

#05_LTE Band 12_10M_QPSK_1_0_Bottom Face_0mm_Ch23095

Communication System: LTE ; Frequency: 707.5 MHz;Duty Cycle: 1:1
Medium: HSL_750_200825 Medium parameters used : f = 707.5 MHz; σ = 0.849 S/m; ε_r = 42.965; ρ = 1000 kg/m^3
Ambient Temperature：23.2 ℃; Liquid Temperature：22.2 ℃

DASY5 Configuration:
- Probe: EX3DV4 - SN7306; ConvF(9.92, 9.92, 9.92) @ 707.5 MHz; Calibrated: 2020/7/24
- Sensor-Surface: 1.4mm (Mechanical Surface Detection)
- Electronics: DAE4 Sn1424; Calibrated: 2020/1/24
- Phantom: ELI v5.0; Type: QDOVA002AA; Serial: 1131
- Measurement SW: DASY52, Version 52.10 (4);SEMCAD X Version 14.6.14 (7483)

Area Scan (81x101x1): Interpolated grid: dx=1.500 mm, dy=1.500 mm
Maximum value of SAR (interpolated) = 1.48 W/kg

Zoom Scan (5x5x7)/Cube 0: Measurement grid: dx=8mm, dy=8mm, dz=5mm
Reference Value = 34.25 V/m; Power Drift = -0.01 dB
Peak SAR (extrapolated) = 1.99 W/kg
SAR(1 g) = 0.943 W/kg; SAR(10 g) = 0.503 W/kg
Maximum value of SAR (measured) = 1.59 W/kg

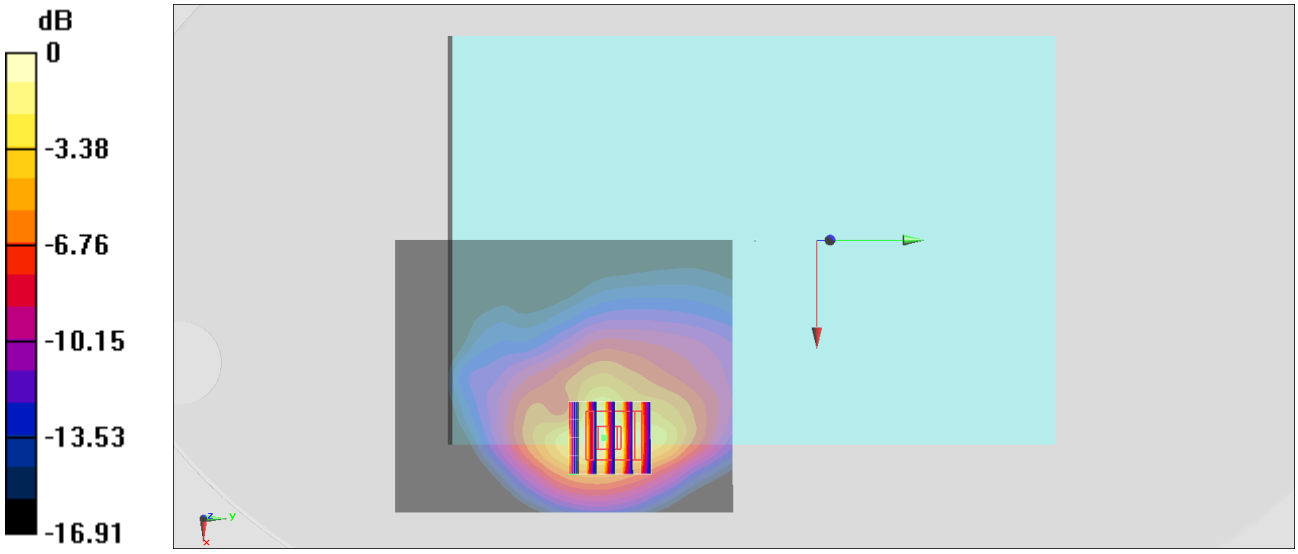

0 dB = 1.59 W/kg = 2.01 dBW/kg

#06_LTE Band 13_10M_QPSK_1_0_Bottom Face_0mm_Ch23230

Communication System: LTE ; Frequency: 782 MHz;Duty Cycle: 1:1
Medium: HSL_750_200825 Medium parameters used: f = 782 MHz; σ = 0.919 S/m; ε_r = 41.965; ρ = 1000 kg/m^3
Ambient Temperature：23.2 ℃; Liquid Temperature：22.2 ℃

DASY5 Configuration:
- Probe: EX3DV4 - SN7306; ConvF(9.92, 9.92, 9.92) @ 782 MHz; Calibrated: 2020/7/24
- Sensor-Surface: 1.4mm (Mechanical Surface Detection)
- Electronics: DAE4 Sn1424; Calibrated: 2020/1/24
- Phantom: ELI v5.0; Type: QDOVA002AA; Serial: 1131
- Measurement SW: DASY52, Version 52.10 (4);SEMCAD X Version 14.6.14 (7483)

Area Scan (81x101x1): Interpolated grid: dx=1.500 mm, dy=1.500 mm
Maximum value of SAR (interpolated) = 1.62 W/kg

Zoom Scan (5x5x7)/Cube 0: Measurement grid: dx=8mm, dy=8mm, dz=5mm
Reference Value = 34.18 V/m; Power Drift = -0.19 dB
Peak SAR (extrapolated) = 2.11 W/kg
SAR(1 g) = 0.982 W/kg; SAR(10 g) = 0.523 W/kg
Maximum value of SAR (measured) = 1.69 W/kg

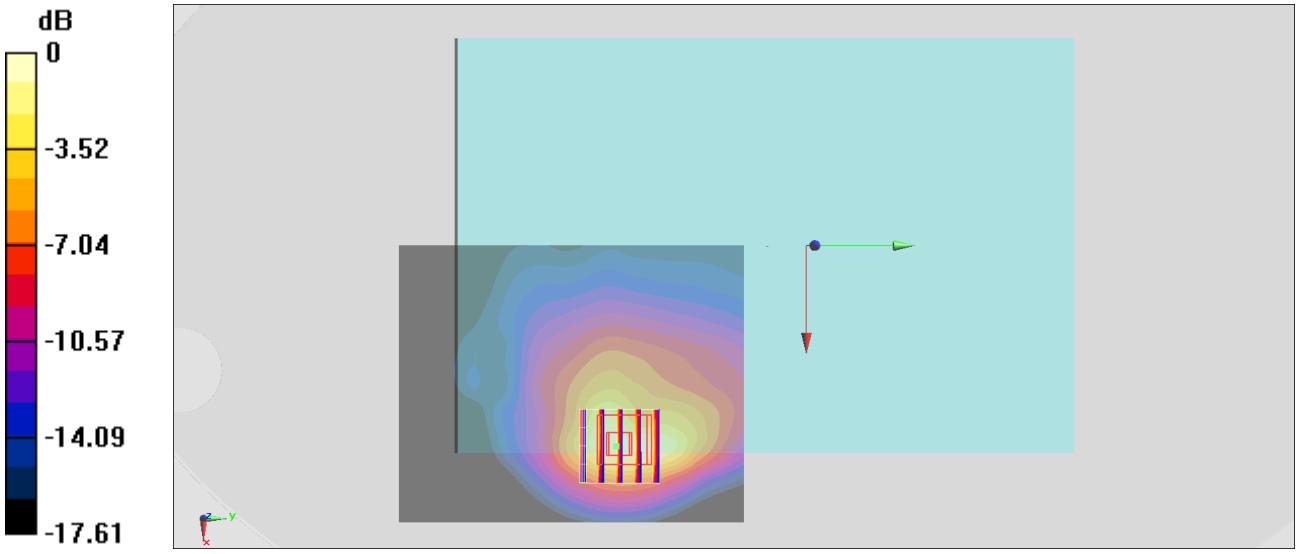

0 dB = 1.69 W/kg = 2.28 dBW/kg

#07_LTE Band 14_10M_QPSK_1_0_Bottom Face_0mm_Ch23330

Communication System: LTE ; Frequency: 793 MHz;Duty Cycle: 1:1
Medium: HSL_750_200825 Medium parameters used: f = 793 MHz; σ = 0.929 S/m; ε_r = 41.784; ρ = 1000 kg/m^3
Ambient Temperature：23.2 ℃; Liquid Temperature：22.2 ℃

DASY5 Configuration:
- Probe: EX3DV4 - SN7306; ConvF(9.92, 9.92, 9.92) @ 793 MHz; Calibrated: 2020/7/24
- Sensor-Surface: 1.4mm (Mechanical Surface Detection)
- Electronics: DAE4 Sn1424; Calibrated: 2020/1/24
- Phantom: ELI v5.0; Type: QDOVA002AA; Serial: 1131
- Measurement SW: DASY52, Version 52.10 (4);SEMCAD X Version 14.6.14 (7483)

Area Scan (81x101x1): Interpolated grid: dx=1.500 mm, dy=1.500 mm
Maximum value of SAR (interpolated) = 1.72 W/kg

Zoom Scan (5x5x7)/Cube 0: Measurement grid: dx=8mm, dy=8mm, dz=5mm
Reference Value = 35.05 V/m; Power Drift = -0.14 dB
Peak SAR (extrapolated) = 2.26 W/kg
SAR(1 g) = 1.05 W/kg; SAR(10 g) = 0.553 W/kg
Maximum value of SAR (measured) = 1.82 W/kg

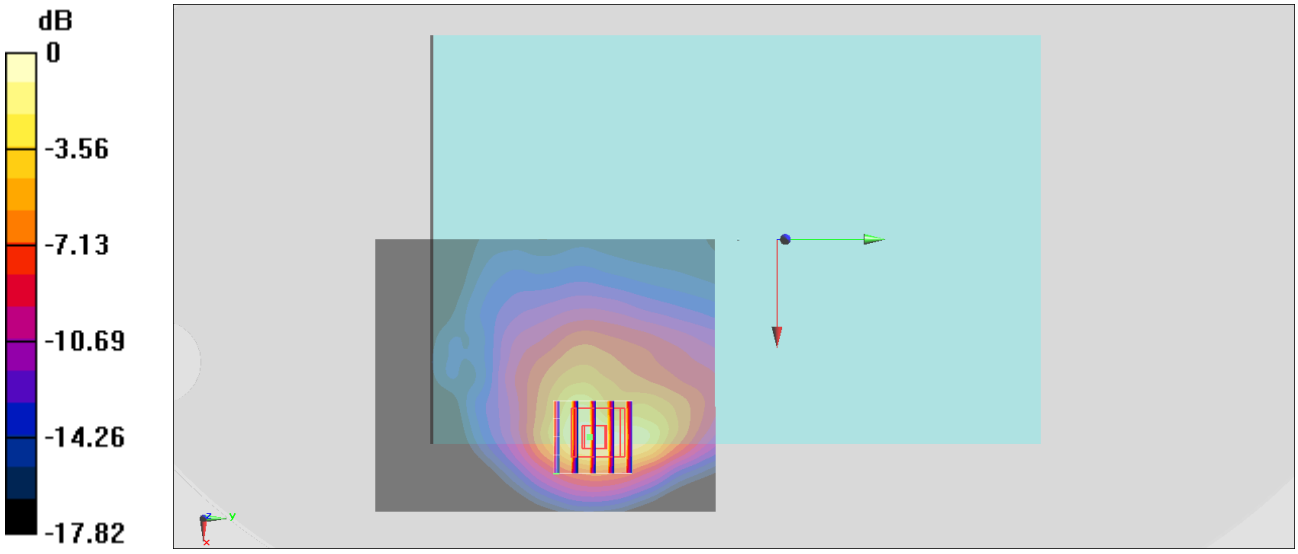

0 dB = 1.82 W/kg = 2.60 dBW/kg

#08_LTE Band 25_20M_QPSK_1_0_Bottom Face_0mm_Ch26140

Communication System: LTE ; Frequency: 1860 MHz;Duty Cycle: 1:1
Medium: HSL_1900_200824 Medium parameters used: f = 1860 MHz; σ = 1.338 S/m; ε_r = 39.233; ρ = 1000 kg/m^3
Ambient Temperature：23.6 ℃; Liquid Temperature：22.6 ℃

DASY5 Configuration:
- Probe: EX3DV4 - SN7306; ConvF(8.06, 8.06, 8.06) @ 1860 MHz; Calibrated: 2020/7/24
- Sensor-Surface: 1.4mm (Mechanical Surface Detection)
- Electronics: DAE4 Sn1424; Calibrated: 2020/1/24
- Phantom: ELI v5.0; Type: QDOVA002AA; Serial: 1131
- Measurement SW: DASY52, Version 52.10 (4);SEMCAD X Version 14.6.14 (7483)

Area Scan (81x101x1): Interpolated grid: dx=1.500 mm, dy=1.500 mm
Maximum value of SAR (interpolated) = 2.70 W/kg

Zoom Scan (5x5x7)/Cube 0: Measurement grid: dx=8mm, dy=8mm, dz=5mm
Reference Value = 29.60 V/m; Power Drift = -0.02 dB
Peak SAR (extrapolated) = 2.93 W/kg
SAR(1 g) = 1.25 W/kg; SAR(10 g) = 0.585 W/kg
Maximum value of SAR (measured) = 2.34 W/kg

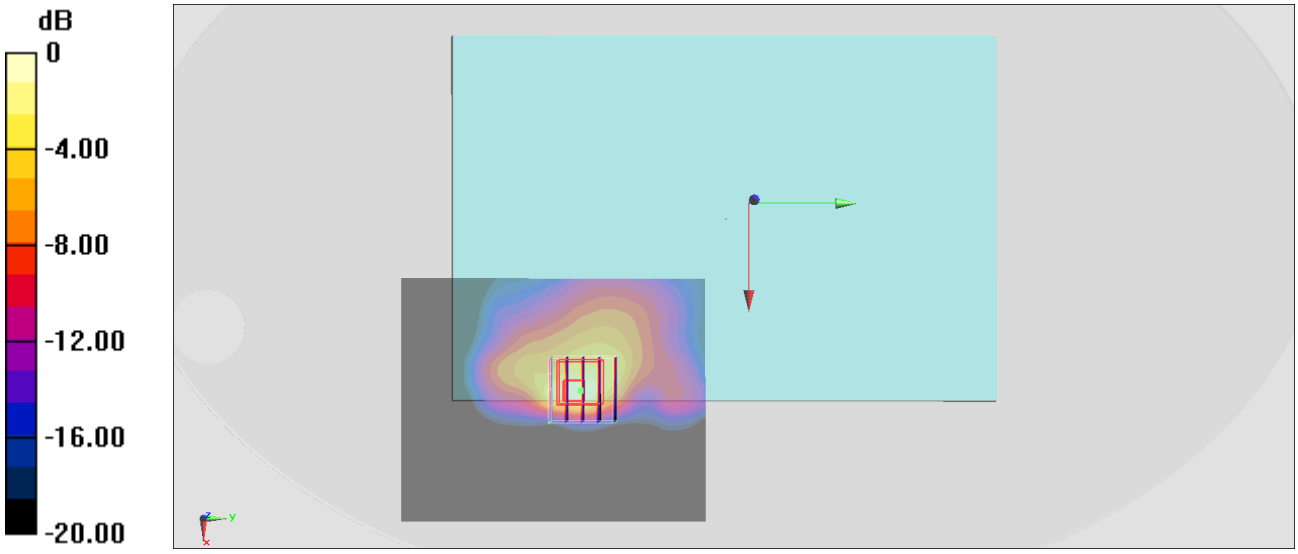

0 dB = 2.34 W/kg = 3.69 dBW/kg

#09_LTE Band 26_15M_QPSK_1_0_Bottom Face_0mm_Ch26865

Communication System: LTE ; Frequency: 831.5 MHz;Duty Cycle: 1:1
Medium: HSL_850_200826 Medium parameters used : f = 831.5 MHz; σ = 0.896 S/m; ε_r = 42.52; ρ = 1000 kg/m^3
Ambient Temperature：23.5 ℃; Liquid Temperature：22.5 ℃

DASY5 Configuration:
- Probe: EX3DV4 - SN7306; ConvF(9.61, 9.61, 9.61) @ 831.5 MHz; Calibrated: 2020/7/24
- Sensor-Surface: 1.4mm (Mechanical Surface Detection)
- Electronics: DAE4 Sn1424; Calibrated: 2020/1/24
- Phantom: ELI v5.0; Type: QDOVA002AA; Serial: 1131
- Measurement SW: DASY52, Version 52.10 (4);SEMCAD X Version 14.6.14 (7483)

Area Scan (81x101x1): Interpolated grid: dx=1.500 mm, dy=1.500 mm
Maximum value of SAR (interpolated) = 2.06 W/kg

Zoom Scan (5x5x7)/Cube 0: Measurement grid: dx=8mm, dy=8mm, dz=5mm
Reference Value = 39.20 V/m; Power Drift = -0.10 dB
Peak SAR (extrapolated) = 2.79 W/kg
SAR(1 g) = 1.22 W/kg; SAR(10 g) = 0.628 W/kg
Maximum value of SAR (measured) = 2.17 W/kg

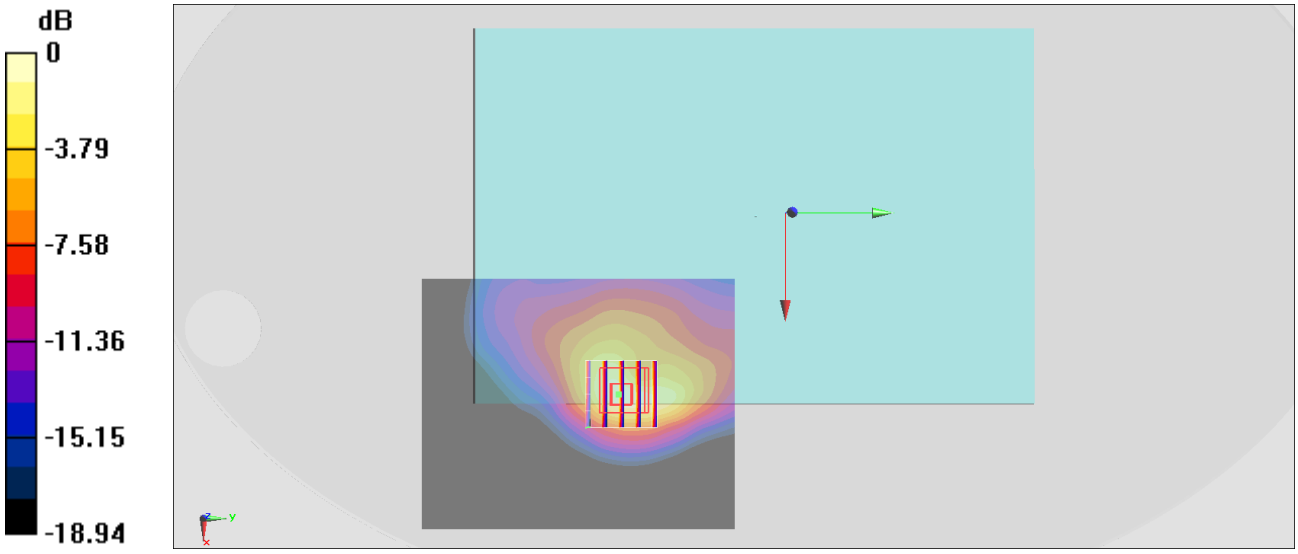

0 dB = 2.17 W/kg = 3.36 dBW/kg

#10_LTE Band 66_20M_QPSK_1_0_Edge 1_0mm_Ch132322

Communication System: LTE; Frequency: 1745 MHz;Duty Cycle: 1:1
Medium: HSL_1750_200824 Medium parameters used: f = 1745 MHz; σ = 1.385 S/m; ε_r = 41.362; ρ = 1000 kg/m^3
Ambient Temperature：23.6 ℃; Liquid Temperature：22.6 ℃

DASY5 Configuration:
- Probe: EX3DV4 - SN7306; ConvF(8.35, 8.35, 8.35) @ 1745 MHz; Calibrated: 2020/7/24
- Sensor-Surface: 1.4mm (Mechanical Surface Detection)
- Electronics: DAE4 Sn1424; Calibrated: 2020/1/24
- Phantom: ELI v5.0; Type: QDOVA002AA; Serial: 1131
- Measurement SW: DASY52, Version 52.10 (4);SEMCAD X Version 14.6.14 (7483)

Area Scan (81x101x1): Interpolated grid: dx=1.500 mm, dy=1.500 mm
Maximum value of SAR (interpolated) = 2.23 W/kg

Zoom Scan (5x5x7)/Cube 0: Measurement grid: dx=8mm, dy=8mm, dz=5mm
Reference Value = 32.59 V/m; Power Drift = 0.05 dB
Peak SAR (extrapolated) = 2.60 W/kg
SAR(1 g) = 1.13 W/kg; SAR(10 g) = 0.483 W/kg
Maximum value of SAR (measured) = 2.17 W/kg

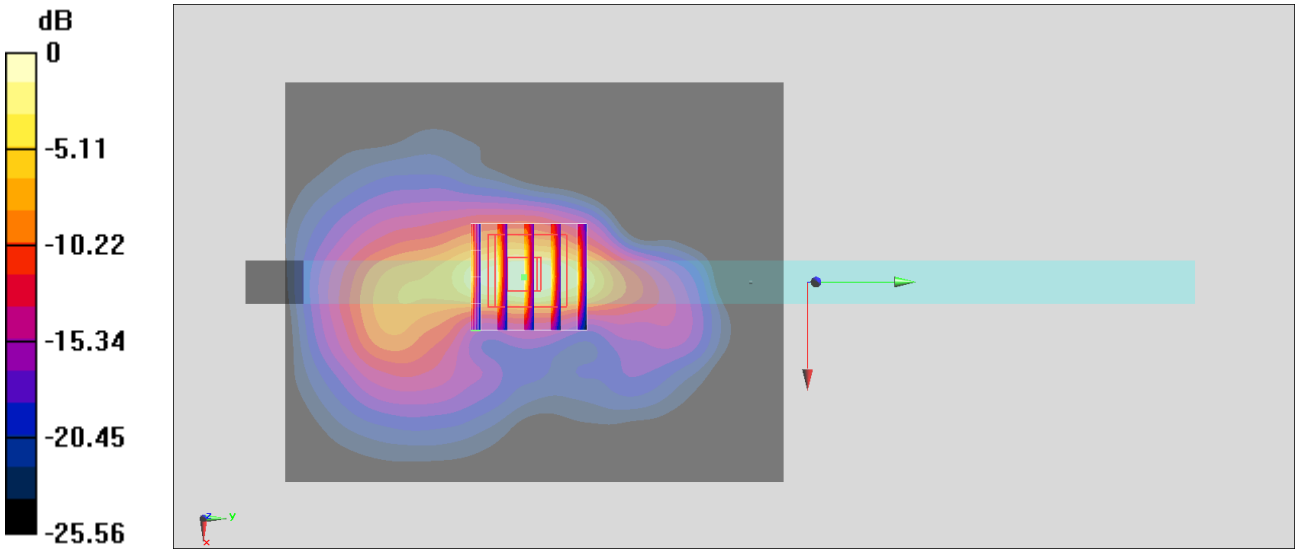

0 dB = 2.17 W/kg = 3.36 dBW/kg

#11_WLAN2.4GHz_802.11b 1Mbps_Bottom Face_0mm_Ch6;Ant 2

Communication System: 802.11b ; Frequency: 2437 MHz;Duty Cycle: 1:1
Medium: HSL_2450_200828 Medium parameters used: f = 2437 MHz; σ = 1.791 S/m; ε_r = 39.59; ρ = 1000 kg/m^3
Ambient Temperature：23.4 ℃; Liquid Temperature：22.4 ℃

DASY5 Configuration:
- Probe: EX3DV4 - SN7306; ConvF(7.47, 7.47, 7.47) @ 2437 MHz; Calibrated: 2020/7/24
- Sensor-Surface: 1.4mm (Mechanical Surface Detection)
- Electronics: DAE4 Sn1424; Calibrated: 2020/1/24
- Phantom: ELI v5.0; Type: QDOVA002AA; Serial: 1131
- Measurement SW: DASY52, Version 52.10 (4);SEMCAD X Version 14.6.14 (7483)

Area Scan (101x101x1): Interpolated grid: dx=1.200 mm, dy=1.200 mm
Maximum value of SAR (interpolated) = 2.36 W/kg

Zoom Scan (7x7x7)/Cube 0: Measurement grid: dx=5mm, dy=5mm, dz=5mm
Reference Value = 28.45 V/m; Power Drift = -0.10 dB
Peak SAR (extrapolated) = 2.94 W/kg
SAR(1 g) = 1.1 W/kg; SAR(10 g) = 0.380 W/kg
Maximum value of SAR (measured) = 2.22 W/kg

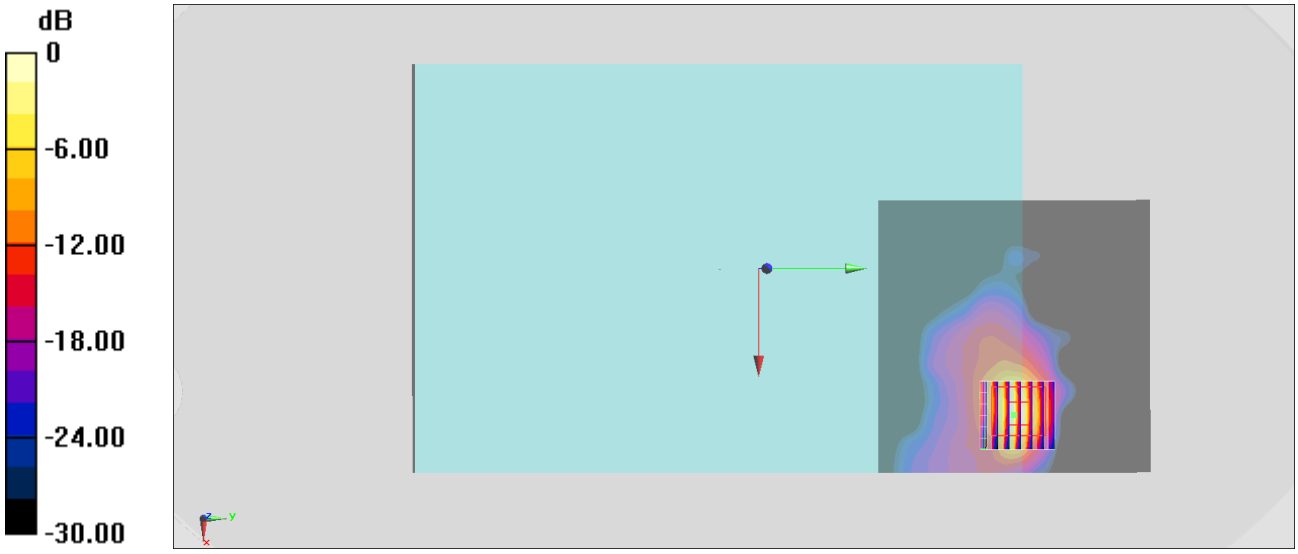

0 dB = 2.22 W/kg = 3.46 dBW/kg

#12_WLAN5GHz_802.11ac-VHT80 MCS0_Edge 2_0mm_Ch42;Ant 1

Communication System: 802.11ac ; Frequency: 5210 MHz;Duty Cycle: 1:1.054
Medium: HSL_5G_200828 Medium parameters used: f = 5210 MHz; σ = 4.837 S/m; ε_r = 36.532; ρ = 1000 kg/m^3
Ambient Temperature：23.4 ℃; Liquid Temperature：22.4 ℃

DASY5 Configuration:
- Probe: EX3DV4 - SN7306; ConvF(5.36, 5.36, 5.36) @ 5210 MHz; Calibrated: 2020/7/24
- Sensor-Surface: 1.4mm (Mechanical Surface Detection)
- Electronics: DAE4 Sn1424; Calibrated: 2020/1/24
- Phantom: ELI V4.0; Type: QD OVA 001 Bx; Serial: 1041
- Measurement SW: DASY52, Version 52.10 (4);SEMCAD X Version 14.6.14 (7483)

Area Scan (121x121x1): Interpolated grid: dx=1.000 mm, dy=1.000 mm
Maximum value of SAR (interpolated) = 1.63 W/kg

Zoom Scan (7x7x7)/Cube 0: Measurement grid: dx=4mm, dy=4mm, dz=1.4mm
Reference Value = 13.13 V/m; Power Drift = 0.07 dB
Peak SAR (extrapolated) = 5.82 W/kg
SAR(1 g) = 1.28 W/kg; SAR(10 g) = 0.257 W/kg
Maximum value of SAR (measured) = 3.46 W/kg

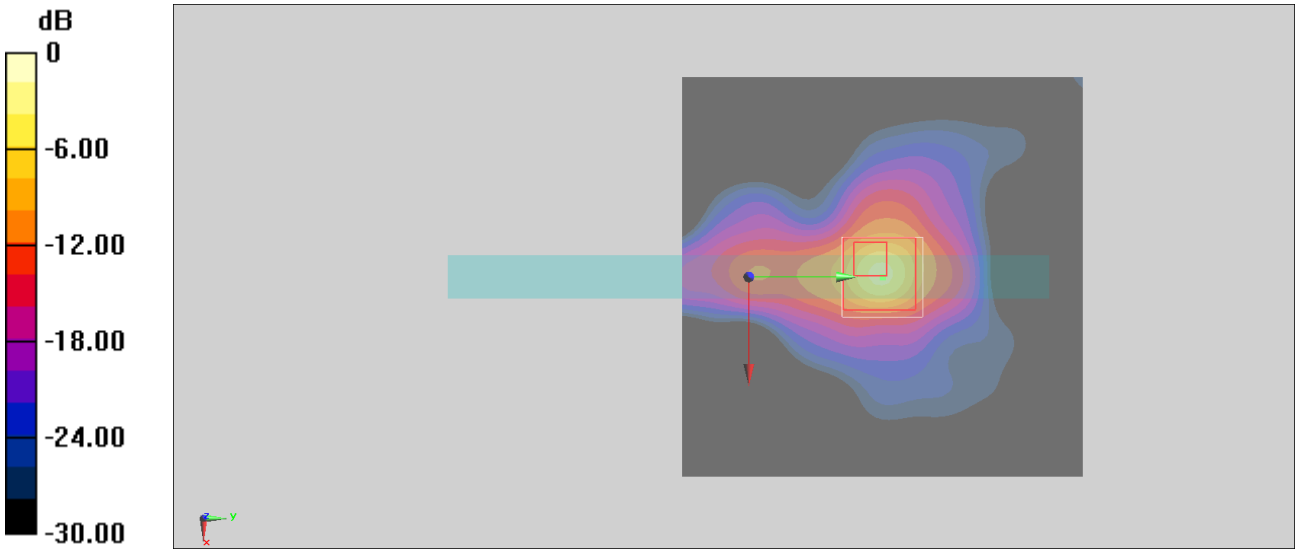

0 dB = 3.46 W/kg = 5.39 dBW/kg

#13_WLAN5GHz_802.11ac-VHT80 MCS0_Edge 2_0mm_Ch58;Ant 1

Communication System: 802.11ac ; Frequency: 5290 MHz;Duty Cycle: 1:1.054
Medium: HSL_5G_200828 Medium parameters used : f = 5290 MHz; σ = 4.923 S/m; ε_r = 36.427; ρ = 1000 kg/m^3
Ambient Temperature：23.4 ℃; Liquid Temperature：22.4 ℃

DASY5 Configuration:
- Probe: EX3DV4 - SN7306; ConvF(5.36, 5.36, 5.36) @ 5290 MHz; Calibrated: 2020/7/24
- Sensor-Surface: 1.4mm (Mechanical Surface Detection)
- Electronics: DAE4 Sn1424; Calibrated: 2020/1/24
- Phantom: ELI V4.0; Type: QD OVA 001 Bx; Serial: 1041
- Measurement SW: DASY52, Version 52.10 (4);SEMCAD X Version 14.6.14 (7483)

Area Scan (121x121x1): Interpolated grid: dx=1.000 mm, dy=1.000 mm
Maximum value of SAR (interpolated) = 2.31 W/kg

Zoom Scan (7x7x7)/Cube 0: Measurement grid: dx=4mm, dy=4mm, dz=1.4mm
Reference Value = 12.73 V/m; Power Drift = 0.06 dB
Peak SAR (extrapolated) = 5.50 W/kg
SAR(1 g) = 1.16 W/kg; SAR(10 g) = 0.251 W/kg
Maximum value of SAR (measured) = 3.24 W/kg

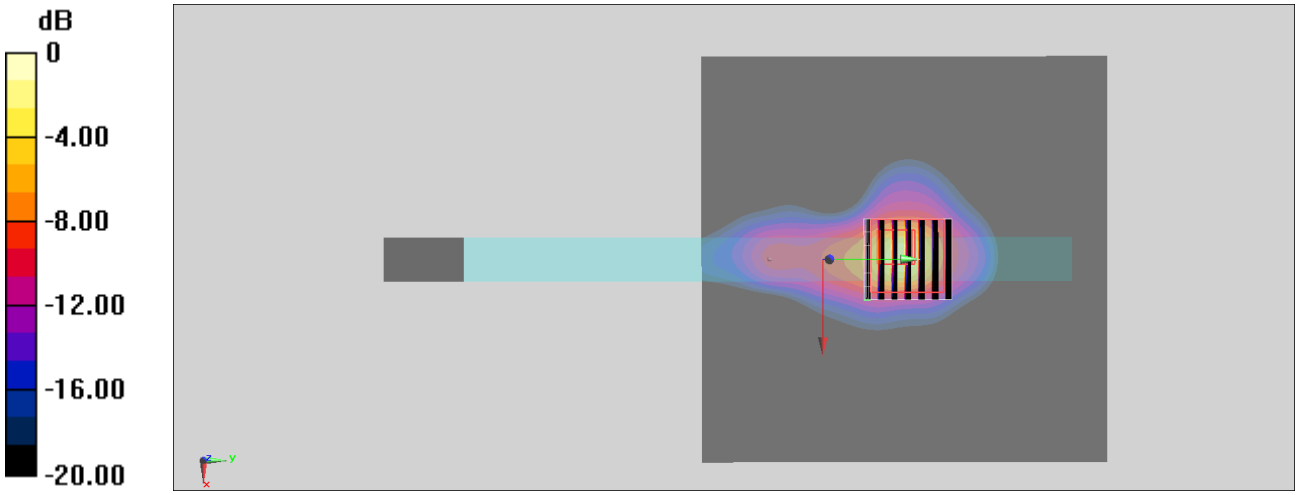

0 dB = 3.24 W/kg = 5.11 dBW/kg

#14_WLAN5GHz_802.11ac-VHT80 MCS0_Edge 2_0mm_Ch138;Ant 2

Communication System: 802.11ac ; Frequency: 5690 MHz;Duty Cycle: 1:1.061
Medium: HSL_5G_200904 Medium parameters used : f = 5690 MHz; σ = 4.94 S/m; ε_r = 35.146; ρ = 1000 kg/m^3
Ambient Temperature：23.4 ℃; Liquid Temperature：22.4 ℃

DASY5 Configuration:
- Probe: EX3DV4 - SN7306; ConvF(4.91, 4.91, 4.91) @ 5690 MHz; Calibrated: 2020/7/24
- Sensor-Surface: 1.4mm (Mechanical Surface Detection)
- Electronics: DAE4 Sn1424; Calibrated: 2020/1/24
- Phantom: ELI V4.0; Type: QD OVA 001 Bx; Serial: 1041
- Measurement SW: DASY52, Version 52.10 (4);SEMCAD X Version 14.6.14 (7483)

Area Scan (101x101x1): Interpolated grid: dx=1.000 mm, dy=1.000 mm
Maximum value of SAR (interpolated) = 2.51 W/kg

Zoom Scan (7x7x7)/Cube 0: Measurement grid: dx=4mm, dy=4mm, dz=1.4mm
Reference Value = 14.56 V/m; Power Drift = 0.01 dB
Peak SAR (extrapolated) = 5.44 W/kg
SAR(1 g) = 1.05 W/kg; SAR(10 g) = 0.265 W/kg
Maximum value of SAR (measured) = 3.05 W/kg

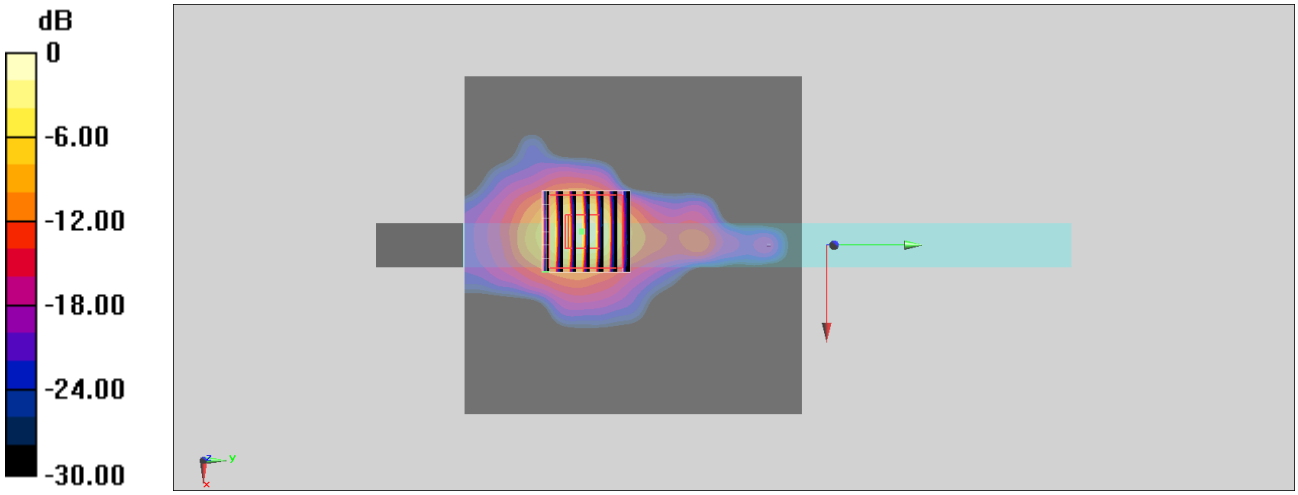

0 dB = 3.05 W/kg = 4.84 dBW/kg

#15_WLAN5GHz_802.11ac-VHT80 MCS0_Edge 2_0mm_Ch155;Ant 2

Communication System: 802.11ac ; Frequency: 5775 MHz;Duty Cycle: 1:1.061
Medium: HSL_5G_200904 Medium parameters used: f = 5775 MHz; σ = 5.03 S/m; ε_r = 35.029; ρ = 1000 kg/m^3
Ambient Temperature：23.4 ℃; Liquid Temperature：22.4 ℃

DASY5 Configuration:
- Probe: EX3DV4 - SN7306; ConvF(4.91, 4.91, 4.91) @ 5775 MHz; Calibrated: 2020/7/24
- Sensor-Surface: 1.4mm (Mechanical Surface Detection)
- Electronics: DAE4 Sn1424; Calibrated: 2020/1/24
- Phantom: ELI V4.0; Type: QD OVA 001 Bx; Serial: 1041
- Measurement SW: DASY52, Version 52.10 (4);SEMCAD X Version 14.6.14 (7483)

Area Scan (101x101x1): Interpolated grid: dx=1.000 mm, dy=1.000 mm
Maximum value of SAR (interpolated) = 2.30 W/kg

Zoom Scan (7x7x7)/Cube 0: Measurement grid: dx=4mm, dy=4mm, dz=1.4mm
Reference Value = 10.44 V/m; Power Drift = 0.03 dB
Peak SAR (extrapolated) = 5.01 W/kg
SAR(1 g) = 1.06 W/kg; SAR(10 g) = 0.236 W/kg
Maximum value of SAR (measured) = 2.77 W/kg

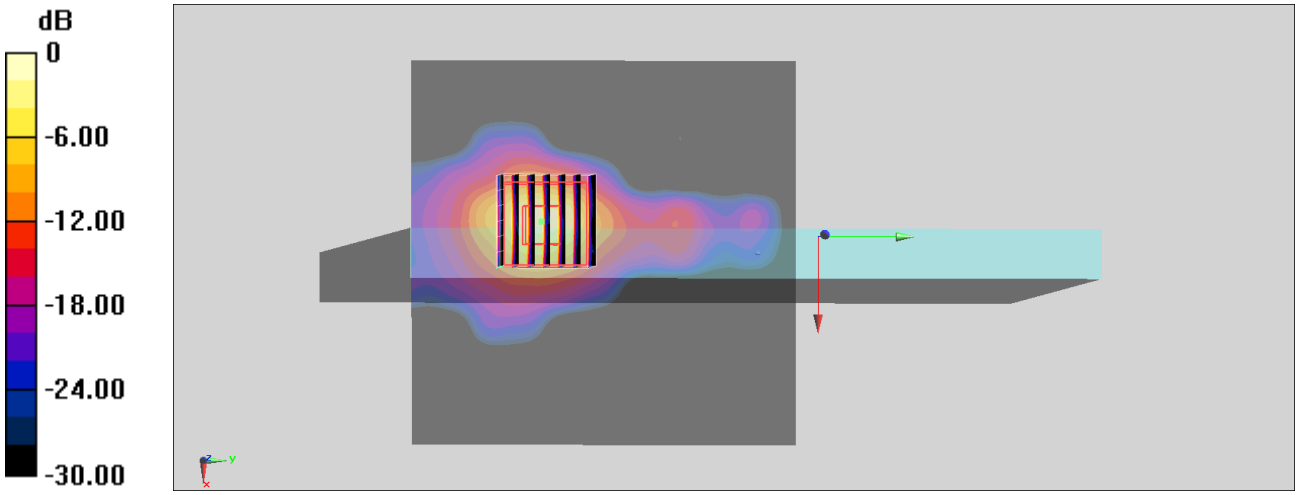

0 dB = 2.77 W/kg = 4.42 dBW/kg

#16_Bluetooth_LE-1Mbps_Edge 2_0mm_Ch39;Ant 1

Communication System: Bluetooth; Frequency: 2480 MHz;Duty Cycle: 1:1.618
Medium: HSL_2450_200828 Medium parameters used: f = 2480 MHz; σ = 1.838 S/m; ε_r = 39.416; ρ = 1000 kg/m^3
Ambient Temperature：23.6 ℃; Liquid Temperature：22.6 ℃

DASY5 Configuration:
- Probe: EX3DV4 - SN7306;ConvF(7.47, 7.47, 7.47) @ 2480 MHz;Calibrated: 2020/7/24
- Sensor-Surface: 1.4mm (Mechanical Surface Detection)
- Electronics: DAE4 Sn1424; Calibrated: 2020/1/24
- Phantom: ELI v5.0; Type: QDOVA002AA; Serial: 1131
- Measurement SW: DASY52, Version 52.10 (4);SEMCAD X Version 14.6.14 (7483)

Area Scan (51x101x1): Interpolated grid: dx=2.400 mm, dy=2.400 mm
Maximum value of SAR (interpolated) = 0.063 W/kg

Zoom Scan (7x7x7)/Cube 0: Measurement grid: dx=5mm, dy=5mm, dz=5mm
Reference Value = 20.58 V/m; Power Drift = -0.16 dB
Peak SAR (extrapolated) = 0.586 W/kg
SAR(1 g) = 0.180 W/kg; SAR(10 g) = 0.050 W/kg
Maximum value of SAR (measured) = 0.419 W/kg

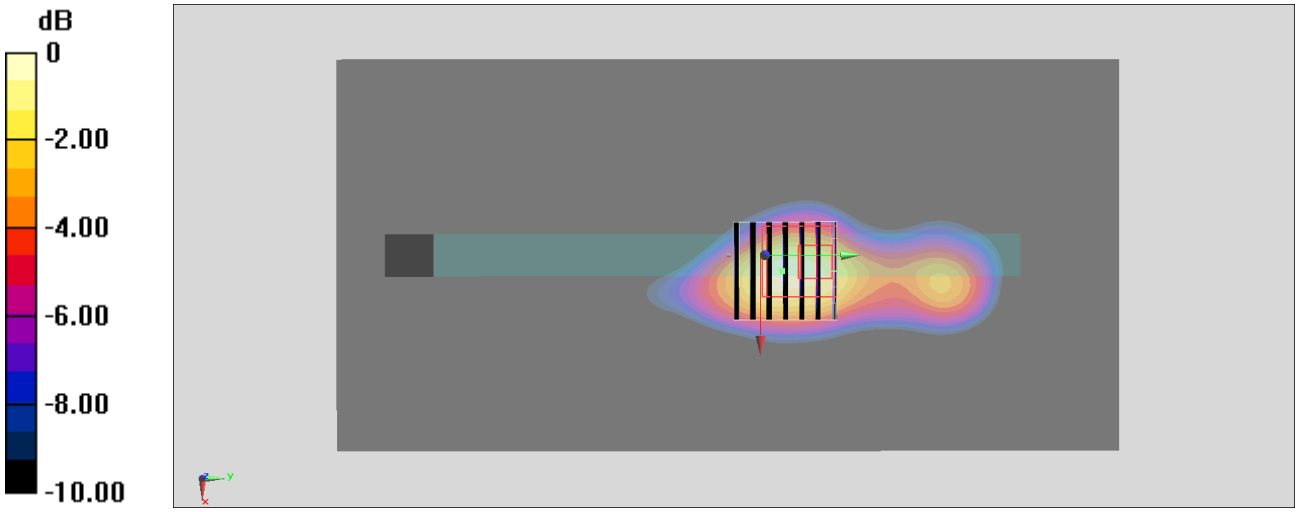

0 dB = 0.063 W/kg = -12.01 dBW/kg