Test Laboratory: Sporton International Inc. SAR/HAC Testing Lab Date: 2020/9/2

System Check_Head_750MHz

DUT: D750V3-1107

Communication System: CW; Frequency: 750 MHz;Duty Cycle: 1:1
Medium: HSL_750_200902 Medium parameters used: f = 750 MHz; σ = 0.897 S/m; ε_r = 42.698; ρ = 1000 kg/m^3
Ambient Temperature：23.4 ℃； Liquid Temperature：22.4 ℃

DASY5 Configuration
- Probe: ES3DV3 - SN3124;ConvF(6.47, 6.47, 6.47) @ 750 MHz;Calibrated: 2019/12/18
- Sensor-Surface: 3mm (Mechanical Surface Detection)
- Electronics: DAE4 Sn316; Calibrated: 2019/12/20
- Phantom: SAM_Right; Type: QD000P40CD; Serial: TP:1815
- Measurement SW: DASY52, Version 52.10 (4); SEMCAD X Version 14.6.14 (7483)

Pin=250mW/Area Scan (61x61x1): Interpolated grid: dx=1.500 mm, dy=1.500 mm
Maximum value of SAR (interpolated) = 2.43 W/kg

Pin=250mW/Zoom Scan (5x5x7)/Cube 0: Measurement grid: dx=8mm, dy=8mm, dz=5mm
Reference Value = 53.83 V/m; Power Drift = -0.07 dB
Peak SAR (extrapolated) = 2.90 W/kg
SAR(1 g) = 2.05 W/kg; SAR(10 g) = 1.38 W/kg
Maximum value of SAR (measured) = 2.37 W/kg

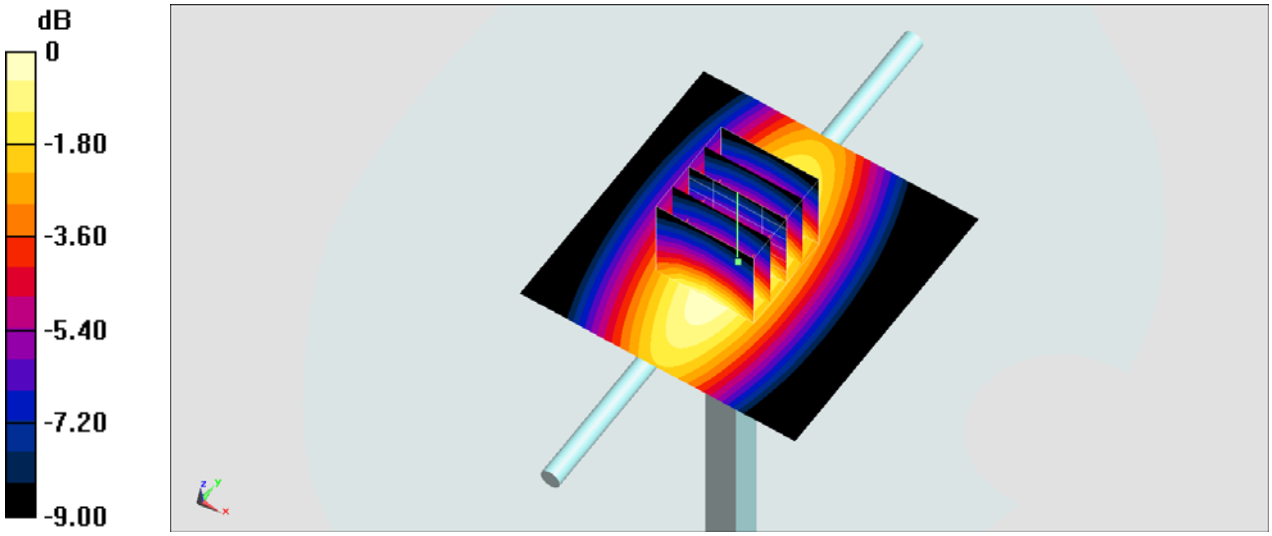

0 dB = 2.37 W/kg = 3.75 dBW/kg

System Check_Head_835MHz

DUT: D835V2-4d167

Communication System: CW; Frequency: 835 MHz;Duty Cycle: 1:1
Medium: HSL_850_200817 Medium parameters used: f = 835 MHz; σ = 0.871 S/m; ε_r = 41.809; ρ = 1000 kg/m^3
Ambient Temperature：23.4 ℃; Liquid Temperature：22.4 ℃

DASY5 Configuration:
- Probe: EX3DV4 - SN7306; ConvF(9.61, 9.61, 9.61) @ 835 MHz; Calibrated: 2020/7/24
- Sensor-Surface: 1.4mm (Mechanical Surface Detection)
- Electronics: DAE4 Sn1424; Calibrated: 2020/1/24
- Phantom: SAM_Right; Type: SAM; Serial: TP:1446
- Measurement SW: DASY52, Version 52.10 (4);SEMCAD X Version 14.6.14 (7483)

Pin=250mW/Area Scan (61x61x1): Interpolated grid: dx=1.500 mm, dy=1.500 mm
Maximum value of SAR (interpolated) = 3.34 W/kg

Pin=250mW/Zoom Scan (5x5x7)/Cube 0: Measurement grid: dx=8mm, dy=8mm, dz=5mm
Reference Value = 63.35 V/m; Power Drift = -0.10 dB
Peak SAR (extrapolated) = 3.78 W/kg
SAR(1 g) = 2.47 W/kg; SAR(10 g) = 1.63 W/kg
Maximum value of SAR (measured) = 3.33 W/kg

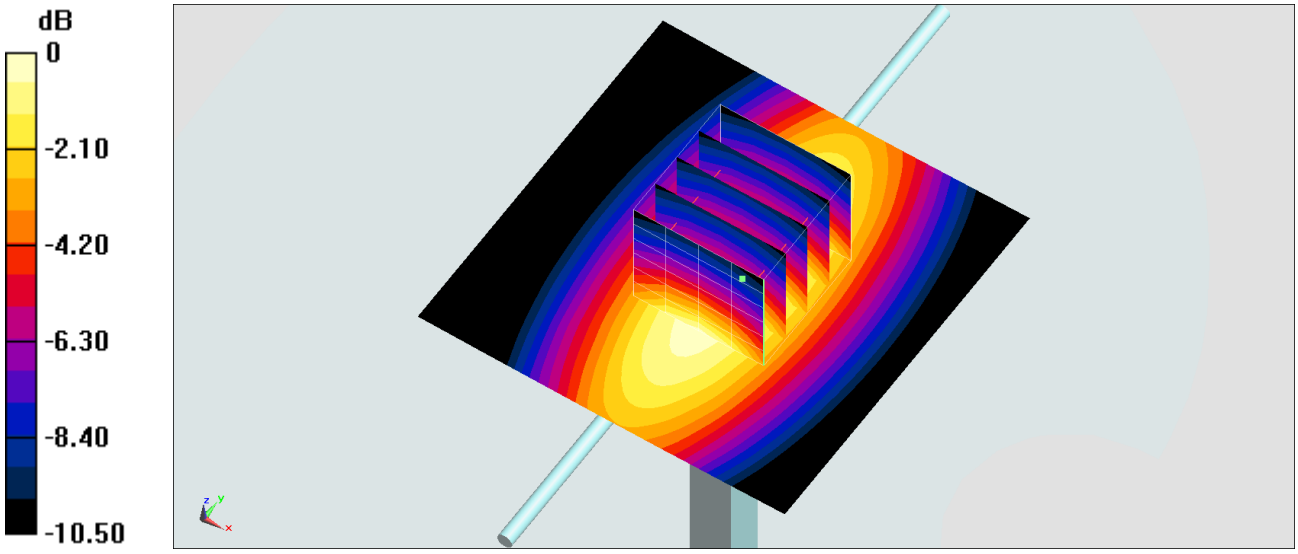

0 dB = 3.33 W/kg = 5.22 dBW/kg

Test Laboratory: Sporton International Inc. SAR/HAC Testing Lab Date: 2020/9/3

System Check_Head_835MHz

DUT: D835V2-4d167

Communication System: CW; Frequency: 835 MHz;Duty Cycle: 1:1
Medium: HSL_835_200903 Medium parameters used: f = 835 MHz; σ = 0.877 S/m; ε_r = 41.946; ρ = 1000 kg/m^3
Ambient Temperature：23.4 ℃； Liquid Temperature：22.4 ℃

DASY5 Configuration
- Probe: ES3DV3 - SN3124;ConvF(6.28, 6.28, 6.28) @ 835 MHz;Calibrated: 2019/12/18
- Sensor-Surface: 3mm (Mechanical Surface Detection)
- Electronics: DAE4 Sn316; Calibrated: 2019/12/20
- Phantom: SAM_Right; Type: QD000P40CD; Serial: TP:1815
- Measurement SW: DASY52, Version 52.10 (4); SEMCAD X Version 14.6.14 (7483)

Pin=250mW/Area Scan (61x61x1): Interpolated grid: dx=1.500 mm, dy=1.500 mm
Maximum value of SAR (interpolated) = 2.75 W/kg

Pin=250mW/Zoom Scan (5x5x7)/Cube 0: Measurement grid: dx=8mm, dy=8mm, dz=5mm
Reference Value = 59.72 V/m; Power Drift = -0.09 dB
Peak SAR (extrapolated) = 3.30 W/kg
SAR(1 g) = 2.27 W/kg; SAR(10 g) = 1.5 W/kg
Maximum value of SAR (measured) = 2.64 W/kg

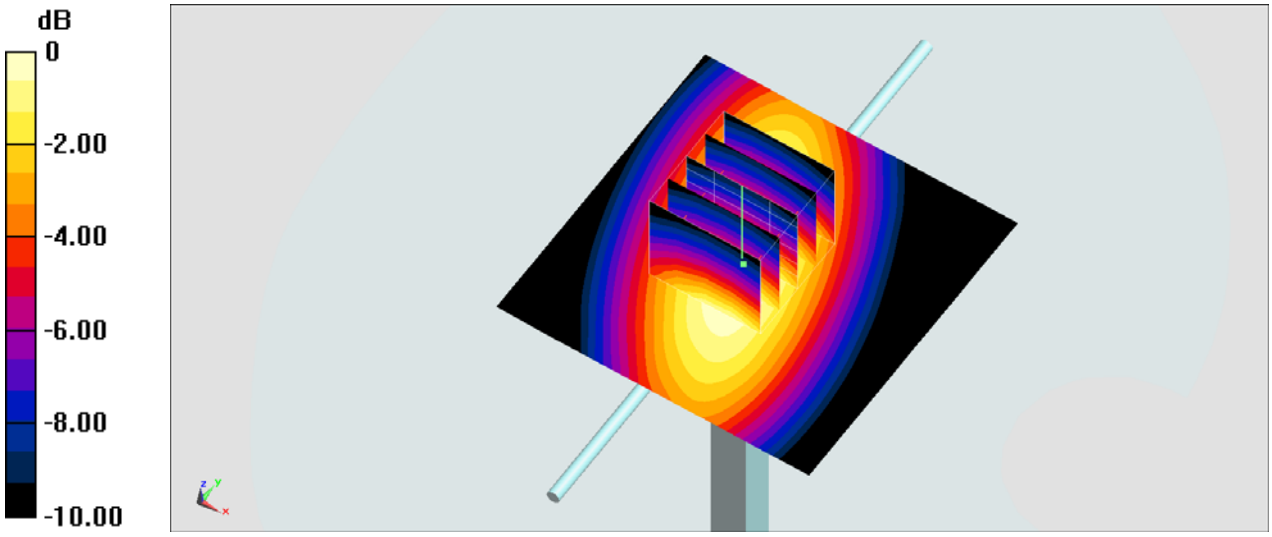

0 dB = 2.64 W/kg = 4.22 dBW/kg

System Check_Head_1750MHz

DUT: D1750V2-1112

Communication System:CW; Frequency: 1750 MHz;Duty Cycle: 1:1
Medium: HSL_1750_200901 Medium parameters used: f = 1750 MHz; σ = 1.36 S/m; ε_r = 40.072; ρ = 1000 kg/m^3
Ambient Temperature：23.4 ℃； Liquid Temperature：22.4 ℃

DASY5 Configuration
- Probe: ES3DV3 - SN3124;ConvF(5.53, 5.53, 5.53) @ 1750 MHz;Calibrated: 2019/12/18
- Sensor-Surface: 3mm (Mechanical Surface Detection)
- Electronics: DAE4 Sn316; Calibrated: 2019/12/20
- Phantom: SAM_Right; Type: QD000P40CD; Serial: TP:1815
- Measurement SW: DASY52, Version 52.10 (4); SEMCAD X Version 14.6.14 (7483)

Pin=250mW/Area Scan (61x61x1): Interpolated grid: dx=1.500 mm, dy=1.500 mm
Maximum value of SAR (interpolated) = 11.6 W/kg

Pin=250mW/Zoom Scan (5x5x7)/Cube 0: Measurement grid: dx=8mm, dy=8mm, dz=5mm
Reference Value = 85.52 V/m; Power Drift = 0.04 dB
Peak SAR (extrapolated) = 15.5 W/kg
SAR(1 g) = 8.89 W/kg; SAR(10 g) = 4.79 W/kg
Maximum value of SAR (measured) = 10.9 W/kg

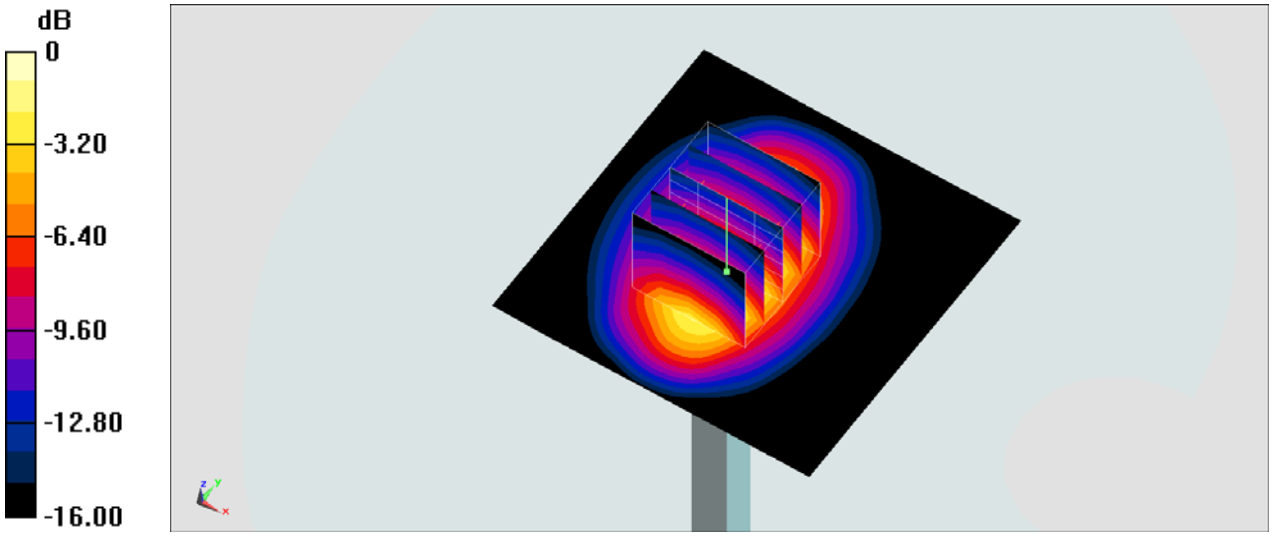

0 dB = 10.9 W/kg = 10.37 dBW/kg

System Check_Head_1900MHz

DUT: D1900V2-5d041

Communication System: CW; Frequency: 1900 MHz;Duty Cycle: 1:1
Medium: HSL_1900_200815 Medium parameters used: f = 1900 MHz; σ = 1.416 S/m; ε_r = 38.866; ρ = 1000 kg/m^3
Ambient Temperature：23.5 ℃; Liquid Temperature：22.5 ℃

DASY5 Configuration:
- Probe: EX3DV4 - SN7306; ConvF(8.06, 8.06, 8.06) @ 1900 MHz; Calibrated: 2020/7/24
- Sensor-Surface: 1.4mm (Mechanical Surface Detection)
- Electronics: DAE4 Sn1424; Calibrated: 2020/1/24
- Phantom: SAM_Right; Type: SAM; Serial: TP:1446
- Measurement SW: DASY52, Version 52.10 (4);SEMCAD X Version 14.6.14 (7483)

Pin=50mW/Area Scan (61x61x1): Interpolated grid: dx=1.500 mm, dy=1.500 mm
Maximum value of SAR (interpolated) = 3.30 W/kg

Pin=50mW/Zoom Scan (5x5x7)/Cube 0: Measurement grid: dx=8mm, dy=8mm, dz=5mm
Reference Value = 49.69 V/m; Power Drift = -0.09 dB
Peak SAR (extrapolated) = 4.10 W/kg
SAR(1 g) = 2 W/kg; SAR(10 g) = 1 W/kg
Maximum value of SAR (measured) = 3.18 W/kg

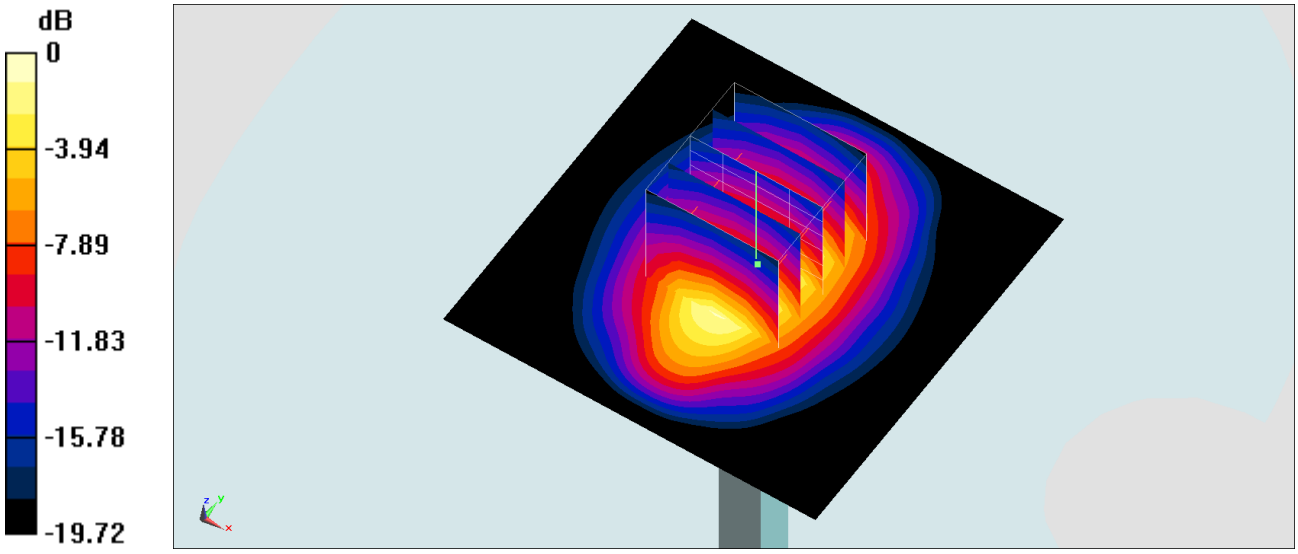

0 dB = 3.18 W/kg = 5.02 dBW/kg

System Check_Head_1900MHz

DUT: D1900V2-5d041

Communication System: CW; Frequency: 1900 MHz;Duty Cycle: 1:1
Medium: HSL_1900_200901 Medium parameters used: f = 1900 MHz; σ = 1.453 S/m; ε_r = 39.427; ρ = 1000 kg/m^3
Ambient Temperature：23.4 ℃； Liquid Temperature：22.4 ℃

DASY5 Configuration
- Probe: ES3DV3 - SN3124;ConvF(5.31, 5.31, 5.31) @ 1900 MHz;Calibrated: 2019/12/18
- Sensor-Surface: 3mm (Mechanical Surface Detection)
- Electronics: DAE4 Sn316; Calibrated: 2019/12/20
- Phantom: SAM_Right; Type: QD000P40CD; Serial: TP:1815
- Measurement SW: DASY52, Version 52.10 (4); SEMCAD X Version 14.6.14 (7483)

Pin=250mW/Area Scan (61x61x1): Interpolated grid: dx=1.500 mm, dy=1.500 mm
Maximum value of SAR (interpolated) = 13.1 W/kg

Pin=250mW/Zoom Scan (5x5x7)/Cube 0: Measurement grid: dx=8mm, dy=8mm, dz=5mm
Reference Value = 84.40 V/m; Power Drift = 0.12 dB
Peak SAR (extrapolated) = 18.1 W/kg
SAR(1 g) = 9.87 W/kg; SAR(10 g) = 5.11 W/kg
Maximum value of SAR (measured) = 12.4 W/kg

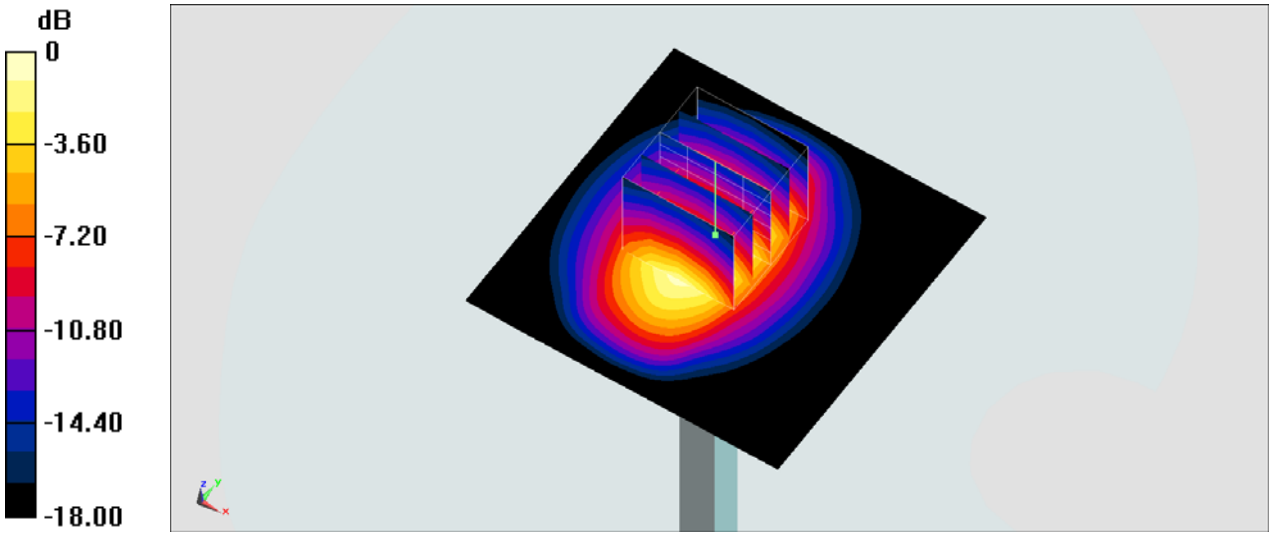

0 dB = 12.4 W/kg = 10.93 dBW/kg

System Check_Head_2450MHz

DUT: D2450V2-929

Communication System: CW; Frequency: 2450 MHz;Duty Cycle: 1:1
Medium: HSL_2450_200905 Medium parameters used : f = 2450 MHz; σ = 1.819 S/m; ε_r = 38.702; ρ = 1000 kg/m^3
Ambient Temperature：23.6 ℃; Liquid Temperature：22.6 ℃

DASY5 Configuration:
- Probe: ES3DV3 - SN3124;ConvF(4.64, 4.64, 4.64) @ 2450 MHz;Calibrated: 2019/12/18
- Sensor-Surface: 3mm (Mechanical Surface Detection)
- Electronics: DAE4 Sn316; Calibrated: 2019/12/20
- Phantom: SAM_Right; Type: QD000P40CD; Serial: TP:1815
- Measurement SW: DASY52, Version 52.10 (4);SEMCAD X Version 14.6.14 (7483)

Pin=250mW/Area Scan (71x71x1): Interpolated grid: dx=1.200 mm, dy=1.200 mm
Maximum value of SAR (interpolated) = 17.2 W/kg

Pin=250mW/Zoom Scan (7x7x7)/Cube 0: Measurement grid: dx=5mm, dy=5mm, dz=5mm
Reference Value = 96.48 V/m; Power Drift = 0.07 dB
Peak SAR (extrapolated) = 26.5 W/kg
SAR(1 g) = 12.8 W/kg; SAR(10 g) = 5.84 W/kg
Maximum value of SAR (measured) = 17.0 W/kg

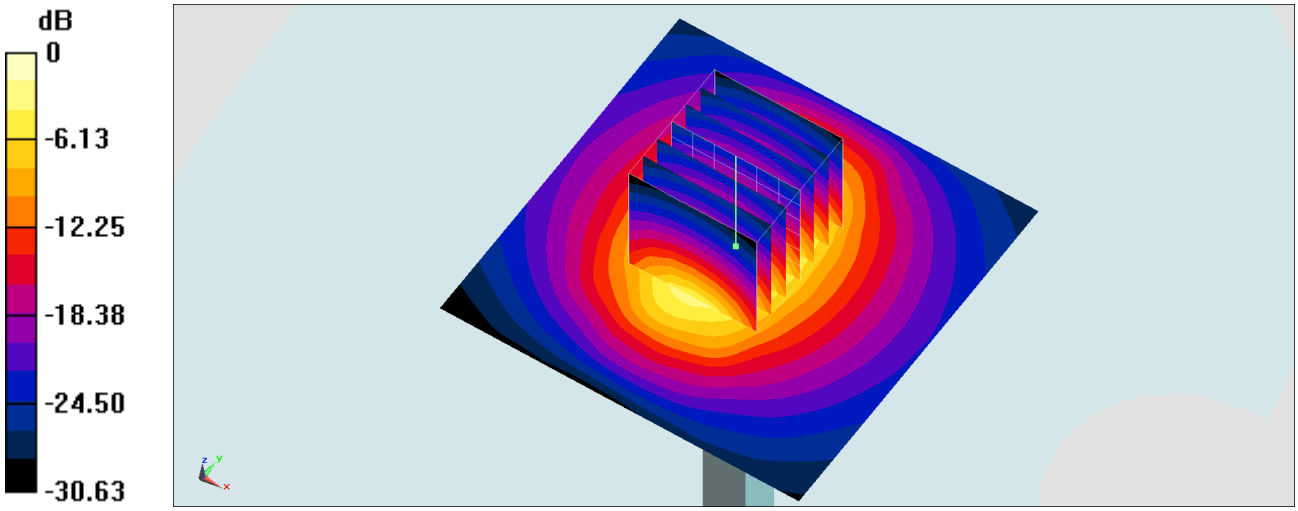

0 dB = 17.2 W/kg = 12.36 dBW/kg

System Check_Head_2600MHz

DUT: D2600V2-1078

Communication System: CW; Frequency: 2600 MHz;Duty Cycle: 1:1
Medium: HSL_2600_200818 Medium parameters used: f = 2600 MHz; σ = 1.958 S/m; ε_r = 39.151; ρ = 1000 kg/m^3
Ambient Temperature：23.5 ℃; Liquid Temperature：22.5 ℃

DASY5 Configuration:
- Probe: EX3DV4 - SN7306; ConvF(7.34, 7.34, 7.34) @ 2600 MHz; Calibrated: 2020/7/24
- Sensor-Surface: 1.4mm (Mechanical Surface Detection)
- Electronics: DAE4 Sn1424; Calibrated: 2020/1/24
- Phantom: SAM_Right; Type: SAM; Serial: TP:1446
- Measurement SW: DASY52, Version 52.10 (4);SEMCAD X Version 14.6.14 (7483)

Pin=250mW/Area Scan (61x61x1): Interpolated grid: dx=1.200 mm, dy=1.200 mm
Maximum value of SAR (interpolated) = 27.0 W/kg

Pin=250mW/Zoom Scan (7x7x7)/Cube 0: Measurement grid: dx=5mm, dy=5mm, dz=5mm
Reference Value = 114.9 V/m; Power Drift = -0.04 dB
Peak SAR (extrapolated) = 33.9 W/kg
SAR(1 g) = 14.7 W/kg; SAR(10 g) = 6.41 W/kg
Maximum value of SAR (measured) = 26.1 W/kg

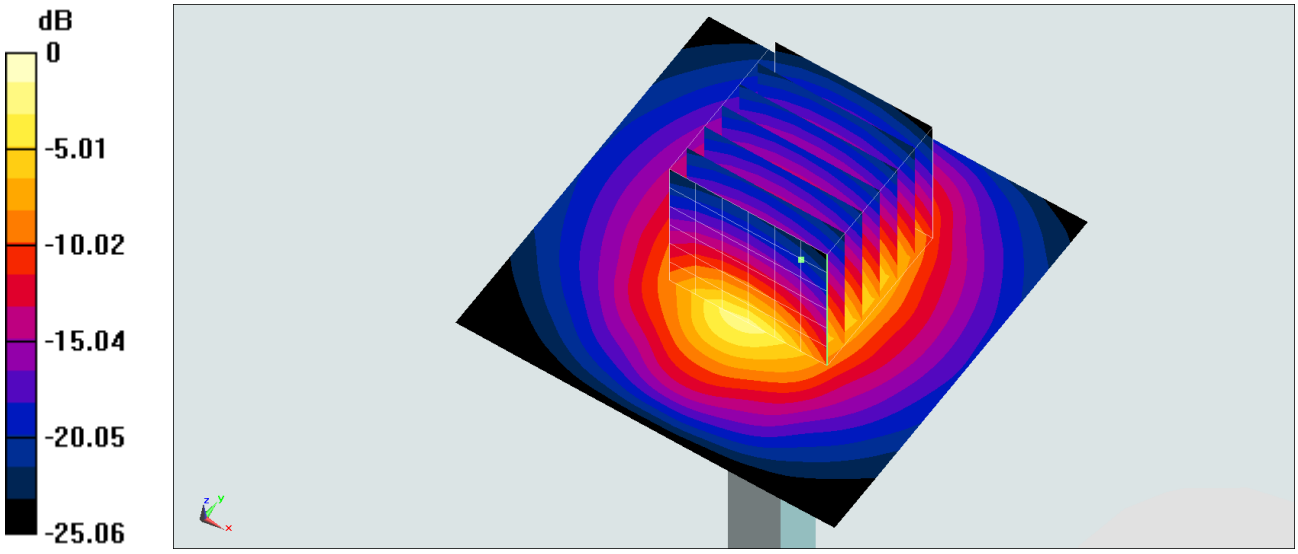

0 dB = 26.1 W/kg = 14.17 dBW/kg

System Check_Head_2600MHz

DUT: D2600V2-1078

Communication System:CW ; Frequency: 2600 MHz;Duty Cycle: 1:1
Medium: HSL_2600_200904 Medium parameters used: f = 2600 MHz; σ = 2.003 S/m; ε_r = 39.158; ρ = 1000 kg/m^3
Ambient Temperature：23.4 ℃; Liquid Temperature：22.4 ℃

DASY5 Configuration
- Probe: ES3DV3 - SN3124;ConvF(4.46, 4.46, 4.46) @ 2600 MHz;Calibrated: 2019/12/18
- Sensor-Surface: 3mm (Mechanical Surface Detection)
- Electronics: DAE4 Sn316; Calibrated: 2019/12/20
- Phantom: SAM_Right; Type: QD000P40CD; Serial: TP:1815
- Measurement SW: DASY52, Version 52.10 (4); SEMCAD X Version 14.6.14 (7483)

Pin=250mW/Area Scan (71x71x1): Interpolated grid: dx=1.200 mm, dy=1.200 mm
Maximum value of SAR (interpolated) = 18.6 W/kg

Pin=250mW/Zoom Scan (7x7x7)/Cube 0: Measurement grid: dx=5mm, dy=5mm, dz=5mm
Reference Value = 94.96 V/m; Power Drift = -0.02 dB
Peak SAR (extrapolated) = 26.0 W/kg
SAR(1 g) = 13.6 W/kg; SAR(10 g) = 6.36 W/kg
Maximum value of SAR (measured) = 17.9 W/kg

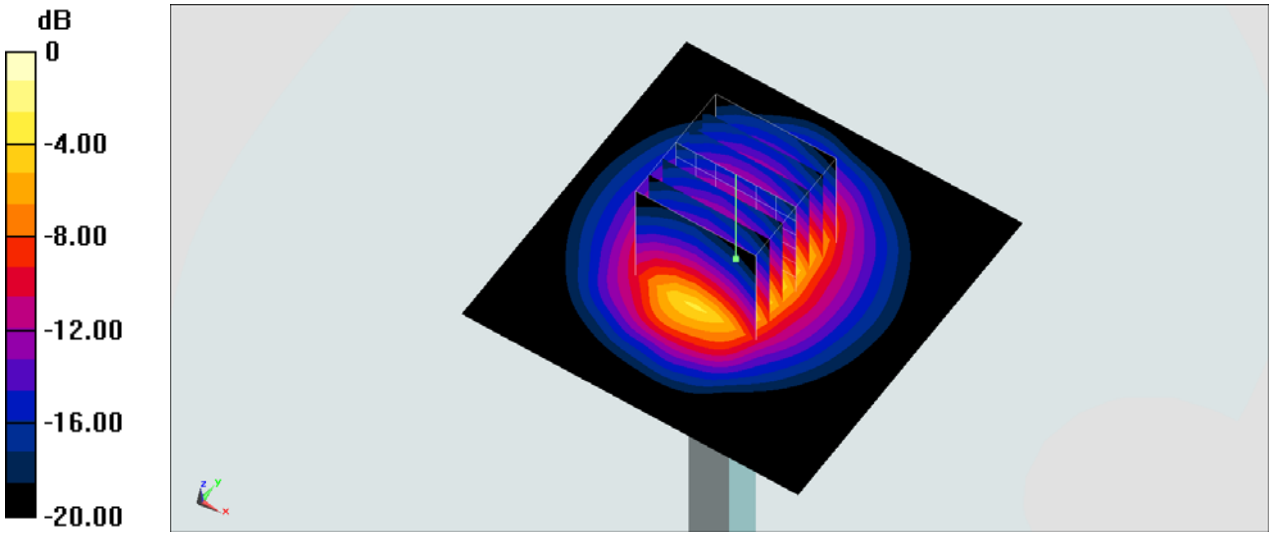

0 dB = 17.9 W/kg = 12.53 dBW/kg

System Check_Head_5250MHz

DUT: D5GHzV2-1006

Communication System: CW; Frequency: 5250 MHz;Duty Cycle: 1:1
Medium: HSL_5G_200903 Medium parameters used : f = 5250 MHz; σ = 4.58 S/m; ε_r = 36.014; ρ = 1000 kg/m^3
Ambient Temperature：23.4 ℃; Liquid Temperature：22.4 ℃

DASY5 Configuration
- Probe: EX3DV4 - SN7306; ConvF(5.36, 5.36, 5.36) @ 5250 MHz; Calibrated: 2020/7/24
- Sensor-Surface: 1.4mm (Mechanical Surface Detection)
- Electronics: DAE3 Sn495; Calibrated: 2020/7/21
- Phantom: SAM LEFT; Type: QD000P40CD; Serial: TP:1718
- Measurement SW: DASY52, Version 52.10 (4); SEMCAD X Version 14.6.14 (7483)

Pin=100mW/Area Scan (71x71x1): Interpolated grid: dx=1.000 mm, dy=1.000 mm
Maximum value of SAR (interpolated) = 19.0 W/kg

Pin=100mW/Zoom Scan (7x7x7)/Cube 0: Measurement grid: dx=4mm, dy=4mm, dz=1.4mm
Reference Value = 71.43 V/m; Power Drift = -0.01 dB
Peak SAR (extrapolated) = 30.2 W/kg
SAR(1 g) = 7.6 W/kg; SAR(10 g) = 2.2 W/kg
Maximum value of SAR (measured) = 18.9 W/kg

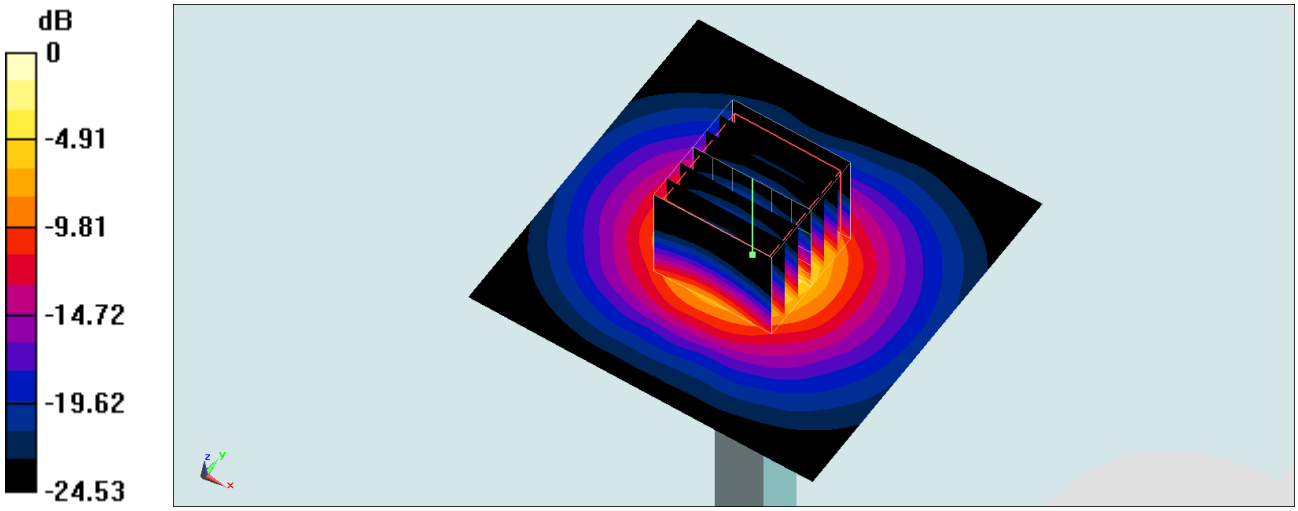

0 dB = 18.9 W/kg = 12.76 dBW/kg

System Check_Head_5600MHz

DUT: D5GHzV2-1006

Communication System: CW; Frequency: 5600 MHz;Duty Cycle: 1:1
Medium: HSL_5G_200903 Medium parameters used: f = 5600 MHz; σ = 4.963 S/m; ε_r = 35.634; ρ = 1000 kg/m^3
Ambient Temperature：23.4 ℃; Liquid Temperature：22.4 ℃

DASY5 Configuration
- Probe: EX3DV4 - SN7306; ConvF(4.68, 4.68, 4.68) @ 5600 MHz; Calibrated: 2020/7/24
- Sensor-Surface: 1.4mm (Mechanical Surface Detection)
- Electronics: DAE3 Sn495; Calibrated: 2020/7/21
- Phantom: SAM LEFT; Type: QD000P40CD; Serial: TP:1718
- Measurement SW: DASY52, Version 52.10 (4); SEMCAD X Version 14.6.14 (7483)

Pin=100mW/Area Scan (71x71x1): Interpolated grid: dx=1.000 mm, dy=1.000 mm
Maximum value of SAR (interpolated) = 24.1 W/kg

Pin=100mW/Zoom Scan (7x7x7)/Cube 0: Measurement grid: dx=4mm, dy=4mm, dz=1.4mm
Reference Value = 70.76 V/m; Power Drift = -0.14 dB
Peak SAR (extrapolated) = 38.3 W/kg
SAR(1 g) = 8.79 W/kg; SAR(10 g) = 2.48 W/kg
Maximum value of SAR (measured) = 22.9 W/kg

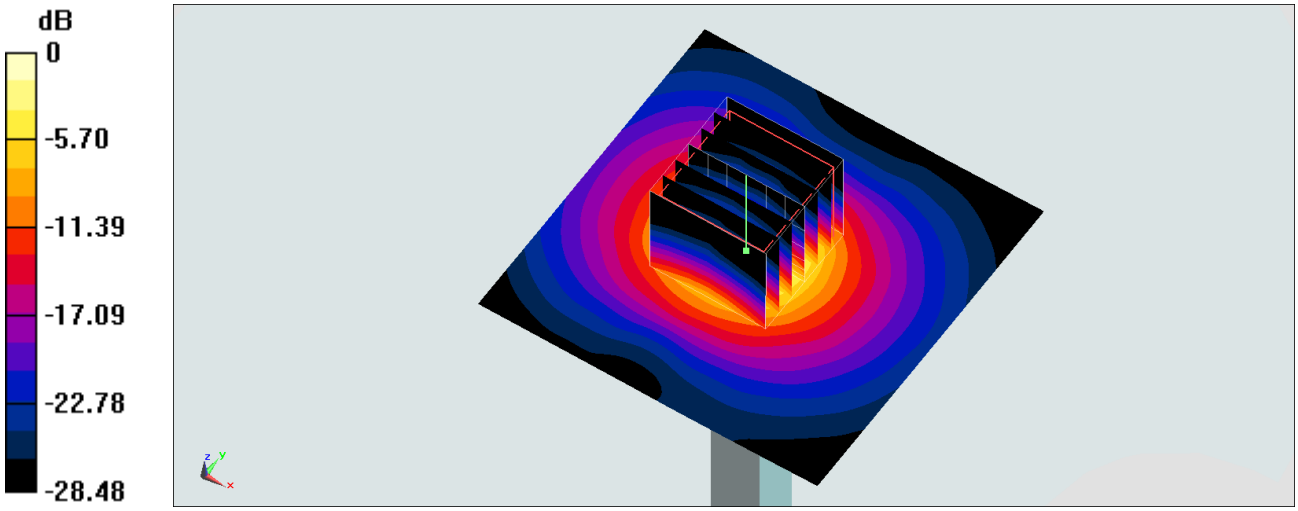

0 dB = 22.9 W/kg = 13.60 dBW/kg

System Check_Head_5750MHz

DUT: D5GHzV2-1006

Communication System: CW; Frequency: 5750 MHz;Duty Cycle: 1:1
Medium: HSL_5G_200903 Medium parameters used: f = 5750 MHz; σ = 5.182 S/m; ε_r = 35.309; ρ = 1000 kg/m^3
Ambient Temperature：23.4 ℃; Liquid Temperature：22.4 ℃

DASY5 Configuration
- Probe: EX3DV4 - SN7306; ConvF(4.91, 4.91, 4.91) @ 5750 MHz; Calibrated: 2020/7/24
- Sensor-Surface: 1.4mm (Mechanical Surface Detection)
- Electronics: DAE3 Sn495; Calibrated: 2020/7/21
- Phantom: SAM LEFT; Type: QD000P40CD; Serial: TP:1718
- Measurement SW: DASY52, Version 52.10 (4); SEMCAD X Version 14.6.14 (7483)

Pin=100mW/Area Scan (71x71x1): Interpolated grid: dx=1.000 mm, dy=1.000 mm
Maximum value of SAR (interpolated) = 19.0 W/kg

Pin=100mW/Zoom Scan (7x7x7)/Cube 0: Measurement grid: dx=4mm, dy=4mm, dz=1.4mm
Reference Value = 66.85 V/m; Power Drift = -0.08 dB
Peak SAR (extrapolated) = 35.3 W/kg
SAR(1 g) = 7.59 W/kg; SAR(10 g) = 2.13 W/kg
Maximum value of SAR (measured) = 20.4 W/kg

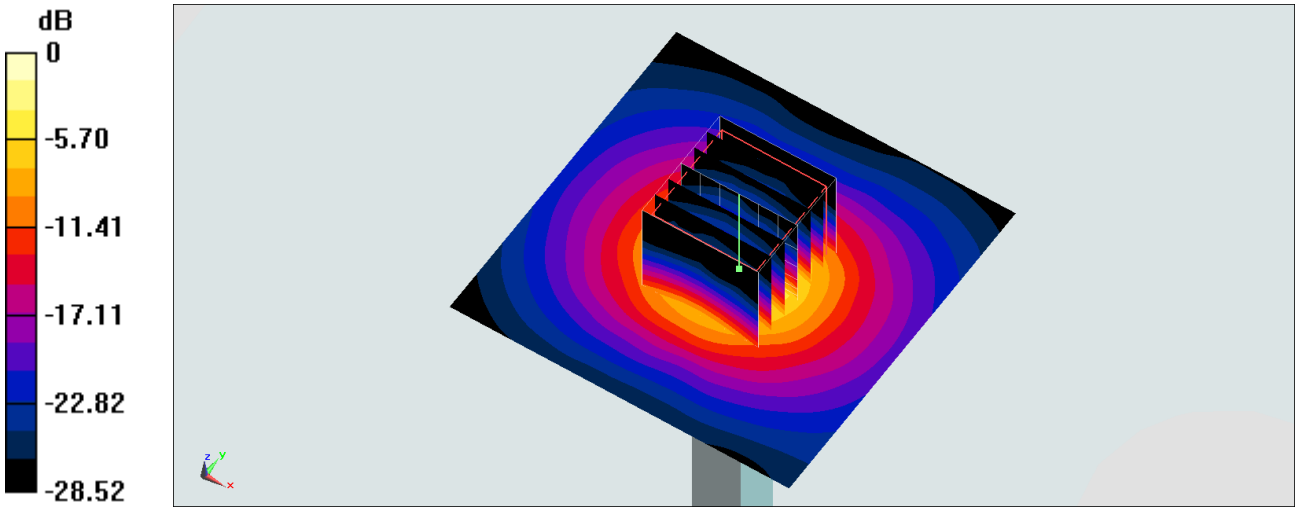

0 dB = 20.4 W/kg = 13.10 dBW/kg