#01_WLAN2.4GHz_802.11b 1Mbps_Back_15mm_Ch11;Ant 1+2

Communication System: 802.11b; Frequency: 2462 MHz;Duty Cycle: 1:1.165
Medium: HSL_2450_240319 Medium parameters used: f = 2462 MHz; σ = 1.856 S/m; ε_r = 39.097; ρ = 1000 kg/m^3
Ambient Temperature：23.7 ℃; Liquid Temperature：22.7 ℃

DASY5 Configuration
- Probe: EX3DV4 - SN7692; ConvF(7.59, 7.41, 8.57) @ 2462 MHz; Calibrated: 2023/7/18
- Sensor-Surface: 1.4mm (Mechanical Surface Detection)
- Electronics: DAE4 Sn1311; Calibrated: 2023/9/13
- Phantom: SAM_Left; Type: QD000P40CD; Serial: 1719
- Measurement SW: DASY52, Version 52.10 (4); SEMCAD X Version 14.6.14 (7483)

Area Scan (91x91x1): Interpolated grid: dx=1.200 mm, dy=1.200 mm
Maximum value of SAR (interpolated) = 0.927 W/kg

Zoom Scan (7x7x7)/Cube 0: Measurement grid: dx=5mm, dy=5mm, dz=5mm
Reference Value = 22.56 V/m; Power Drift = -0.11 dB
Peak SAR (extrapolated) = 1.03 W/kg
SAR(1 g) = 0.575 W/kg; SAR(10 g) = 0.299 W/kg
Smallest distance from peaks to all points 3 dB below = 9 mm
Ratio of SAR at M2 to SAR at M1 = 55.2%
Maximum value of SAR (measured) = 0.861 W/kg

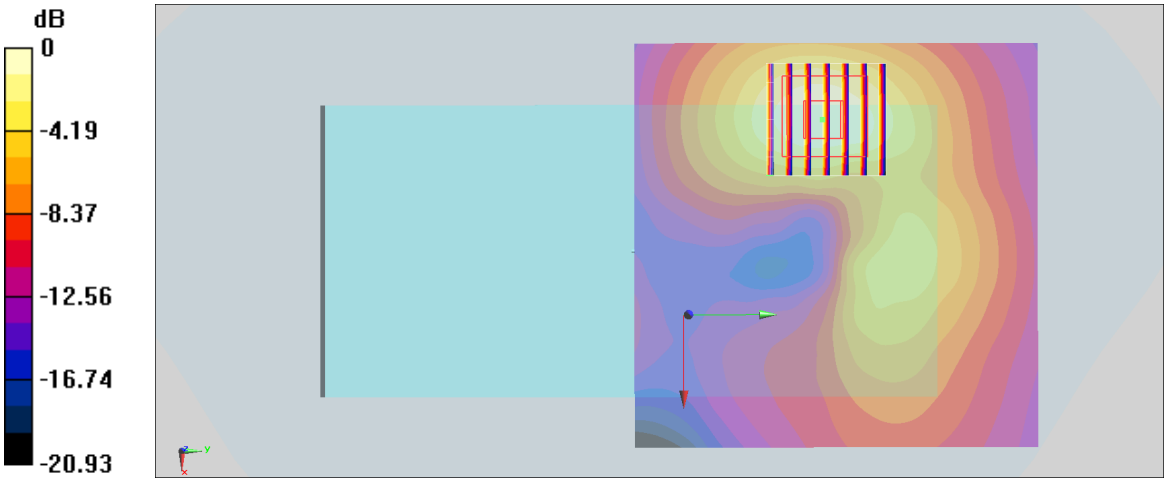

0 dB = 0.861 W/kg = -0.65 dBW/kg

#02_WLAN5GHz_802.11n-HT40 MCS0_Back_15mm_Ch54;Ant 1+2

Communication System: 802.11n ; Frequency: 5270 MHz;Duty Cycle: 1:1.165
Medium: HSL_5G_240320 Medium parameters used: f = 5270 MHz; σ = 4.775 S/m; ε_r = 37.127; ρ = 1000 kg/m^3
Ambient Temperature：23.6 ℃; Liquid Temperature：22.6 ℃

DASY5 Configuration
- Probe: EX3DV4 - SN7692; ConvF(5.84, 5.74, 6.7) @ 5270 MHz; Calibrated: 2023/7/18
- Sensor-Surface: 1.4mm (Mechanical Surface Detection)
- Electronics: DAE4 Sn1311; Calibrated: 2023/9/13
- Phantom: SAM_Left; Type: QD000P40CD; Serial: 1719
- Measurement SW: DASY52, Version 52.10 (4); SEMCAD X Version 14.6.14 (7483)

Area Scan (111x111x1): Interpolated grid: dx=1.000 mm, dy=1.000 mm
Maximum value of SAR (interpolated) = 1.95 W/kg

Zoom Scan (7x7x7)/Cube 0: Measurement grid: dx=4mm, dy=4mm, dz=1.4mm
Reference Value = 20.91 V/m; Power Drift = -0.08 dB
Peak SAR (extrapolated) = 2.96 W/kg
SAR(1 g) = 0.908 W/kg; SAR(10 g) = 0.374 W/kg
Smallest distance from peaks to all points 3 dB below = 14.7 mm
Ratio of SAR at M2 to SAR at M1 = 66.5%
Maximum value of SAR (measured) = 1.91 W/kg

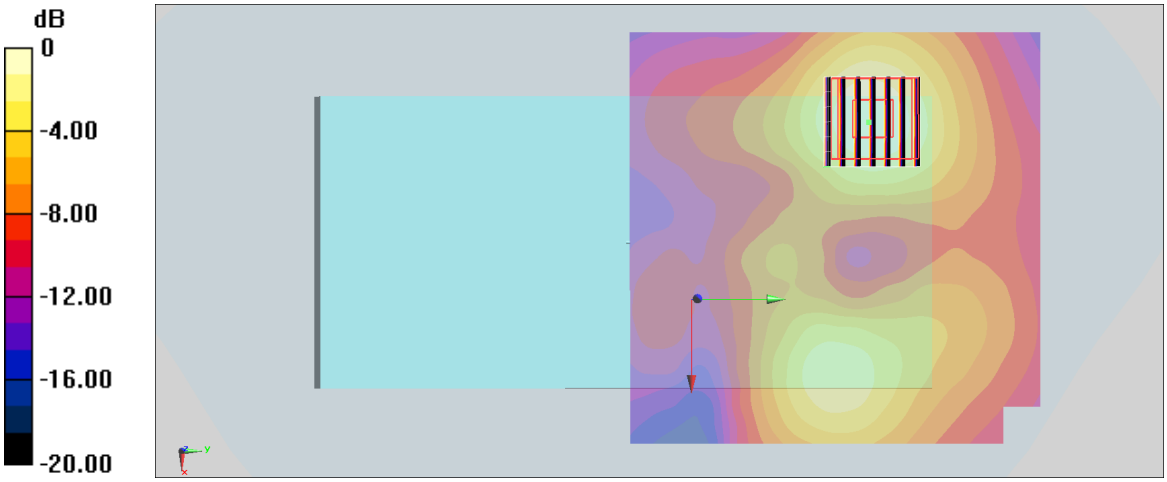

0 dB = 1.91 W/kg = 2.81 dBW/kg

#03_WLAN5GHz_802.11ac-VHT80 MCS0_Back_15mm_Ch138;Ant 1+2

Communication System: 802.11ac ; Frequency: 5690 MHz;Duty Cycle: 1:1.166
Medium: HSL_5G_240320 Medium parameters used : f = 5690 MHz; σ = 5.213 S/m; ε_r = 36.624; ρ = 1000 kg/m^3
Ambient Temperature：23.6 ℃; Liquid Temperature：22.6 ℃

DASY5 Configuration
- Probe: EX3DV4 - SN7692; ConvF(5.23, 5.12, 5.97) @ 5690 MHz; Calibrated: 2023/7/18
- Sensor-Surface: 1.4mm (Mechanical Surface Detection)
- Electronics: DAE4 Sn1311; Calibrated: 2023/9/13
- Phantom: SAM_Left; Type: QD000P40CD; Serial: 1719
- Measurement SW: DASY52, Version 52.10 (4); SEMCAD X Version 14.6.14 (7483)

Area Scan (111x111x1): Interpolated grid: dx=1.000 mm, dy=1.000 mm
Maximum value of SAR (interpolated) = 1.68 W/kg

Zoom Scan (7x7x7)/Cube 0: Measurement grid: dx=4mm, dy=4mm, dz=1.4mm
Reference Value = 19.78 V/m; Power Drift = -0.04 dB
Peak SAR (extrapolated) = 2.81 W/kg
SAR(1 g) = 0.765 W/kg; SAR(10 g) = 0.318 W/kg
Smallest distance from peaks to all points 3 dB below = 14.3 mm
Ratio of SAR at M2 to SAR at M1 = 62.5%
Maximum value of SAR (measured) = 1.67 W/kg

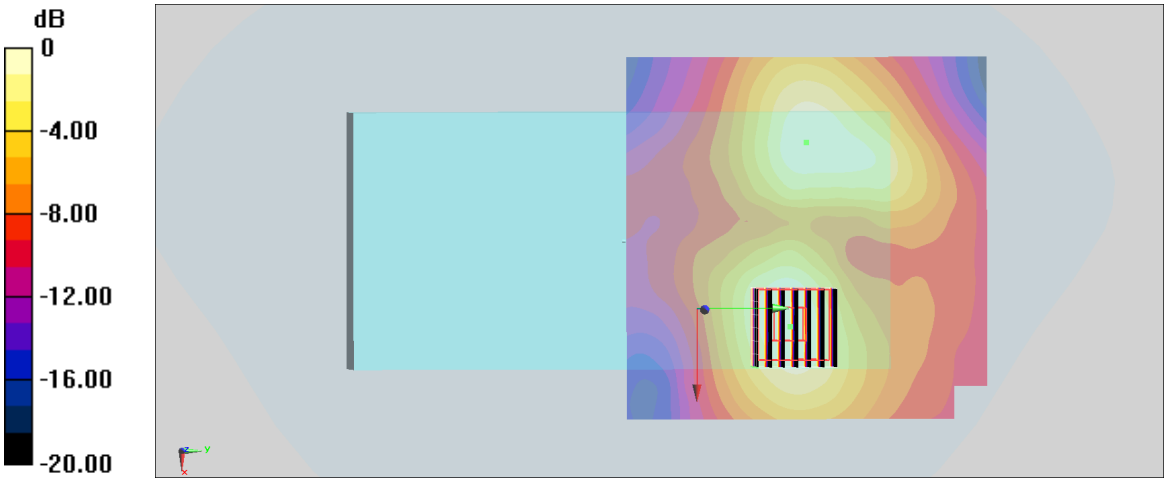

0 dB = 1.67 W/kg = 2.23 dBW/kg

#04_WLAN5GHz_802.11ac-VHT80 MCS0_Back_15mm_Ch155;Ant 1+2

Communication System: 802.11ac ; Frequency: 5775 MHz;Duty Cycle: 1:1.166
Medium: HSL_5G_240321 Medium parameters used: f = 5775 MHz; σ = 5.258 S/m; ε_r = 35.907; ρ = 1000 kg/m^3
Ambient Temperature：23.5 ℃; Liquid Temperature：22.5 ℃

DASY5 Configuration
- Probe: EX3DV4 - SN7692; ConvF(5.23, 5.12, 5.97) @ 5775 MHz; Calibrated: 2023/7/18
- Sensor-Surface: 1.4mm (Mechanical Surface Detection)
- Electronics: DAE4 Sn1311; Calibrated: 2023/9/13
- Phantom: SAM_Left; Type: QD000P40CD; Serial: 1719
- Measurement SW: DASY52, Version 52.10 (4); SEMCAD X Version 14.6.14 (7483)

Area Scan (111x111x1): Interpolated grid: dx=1.000 mm, dy=1.000 mm
Maximum value of SAR (interpolated) = 1.82 W/kg

Zoom Scan (7x7x7)/Cube 0: Measurement grid: dx=4mm, dy=4mm, dz=1.4mm
Reference Value = 20.47 V/m; Power Drift = -0.05 dB
Peak SAR (extrapolated) = 3.05 W/kg
SAR(1 g) = 0.806 W/kg; SAR(10 g) = 0.328 W/kg
Smallest distance from peaks to all points 3 dB below = 13.8 mm
Ratio of SAR at M2 to SAR at M1 = 62.2%
Maximum value of SAR (measured) = 1.82 W/kg

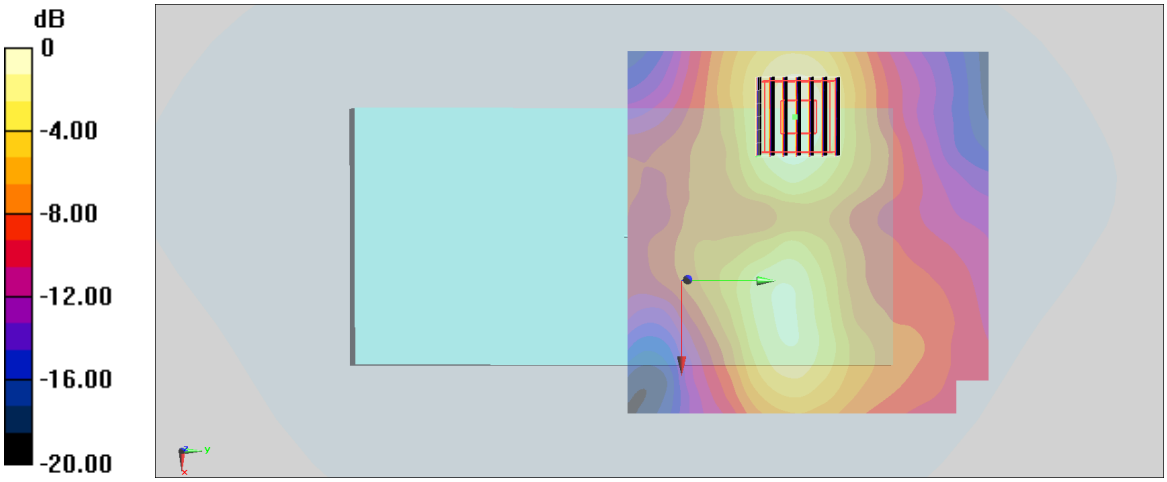

0 dB = 1.82 W/kg = 2.60 dBW/kg

Date: 2024-03-21

#05_WLAN6GHz_802.11ax-HE160 MCS0_Back_15mm_Ch15;Ant 1+2

Communication System: 802.11ax ; Frequency: 6025.000 MHz; Duty Cycle: 1:1.166
Medium: HSL_6500_240321 Medium parameters used: f= 6025.000 MHz; σ= 5.46 S/m; ε_r = 35.4
Ambient Temperature: 23.5°C; Liquid Temperature: 22.5°C

DASY6 Configuration:
- Probe: EX3DV4 - SN7692; ConvF(5.45, 5.38, 6.12); Calibrated: 2023-07-18
- Sensor-Surface: 1.4 mm
- Electronics: DAE4 Sn1694; Calibrated: 2023-09-13
- Phantom: Twin-SAM V5.0 (30deg probe tilt); Serial: 1719; Section: Flat
- Measurement Software: 16.2.4.2524
- UID: WLAN, 10743-AAC

Area Scan (119.0 mm x 102.0 mm): Measurement Grid: 8.5 mm x 8.5 mm

SAR (1g) = 0.112 W/kg; SAR (10g) = 0.044 W/kg;

Zoom Scan (22.0 mm x 22.0 mm x 22.0 mm): Measurement Grid: 3.4 mm x 3.4 mm x 1.4 mm

Power Drift = -0.19 dB
SAR (1g) = 0.114 W/kg; SAR (8g) = 0.050 W/kg; SAR (10g) = 0.045 W/kg
Smallest distance from peaks to all points 3 dB below = 12.8 mm
Ratio of SAR at M2 to SAR at M1 = 59.5 %
psAPD (1.0cm2, sq) = 1.14 [W/m2]; psAPD (4.0cm2, sq) = 0.999 [W/m2]

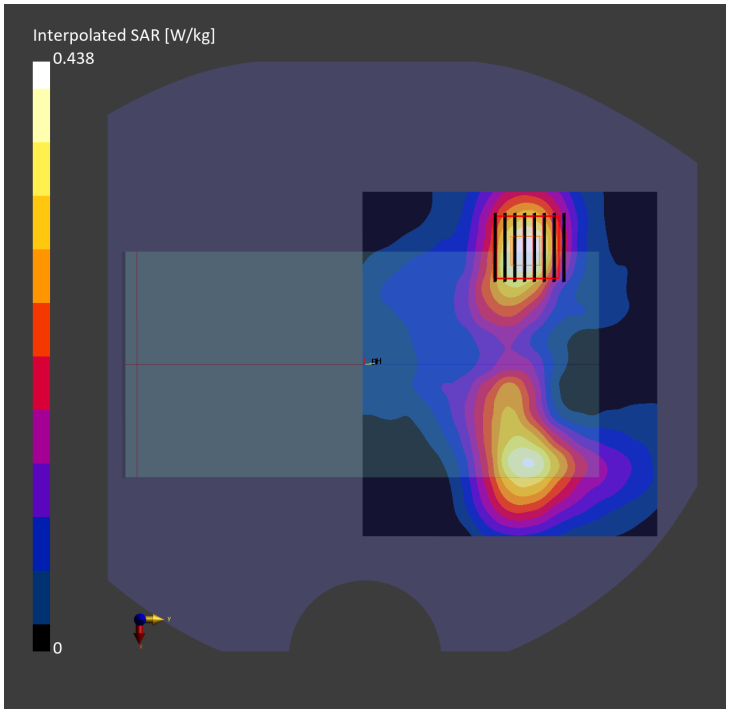

#06_Bluetooth_1Mbps_Back_15mm_Ch78;Ant 1

Communication System: Bluetooth ; Frequency: 2480 MHz;Duty Cycle: 1:1.301
Medium: HSL_2450_240319 Medium parameters used: f = 2480 MHz; σ = 1.878 S/m; ε_r = 39.02; ρ = 1000 kg/m^3
Ambient Temperature：23.7 ℃; Liquid Temperature：22.7 ℃

DASY5 Configuration
- Probe: EX3DV4 - SN7692; ConvF(7.59, 7.41, 8.57) @ 2480 MHz; Calibrated: 2023/7/18
- Sensor-Surface: 1.4mm (Mechanical Surface Detection)
- Electronics: DAE4 Sn1311; Calibrated: 2023/9/13
- Phantom: SAM_Left; Type: QD000P40CD; Serial: 1719
- Measurement SW: DASY52, Version 52.10 (4); SEMCAD X Version 14.6.14 (7483)

Area Scan (91x91x1): Interpolated grid: dx=1.200 mm, dy=1.200 mm
Reference Value = not measured; Power Drift = not measured
Fast SAR: SAR(1 g) = 0.001 W/kg; SAR(10 g) = 0.001 W/kg
Maximum value of SAR (interpolated) = 0 W/kg

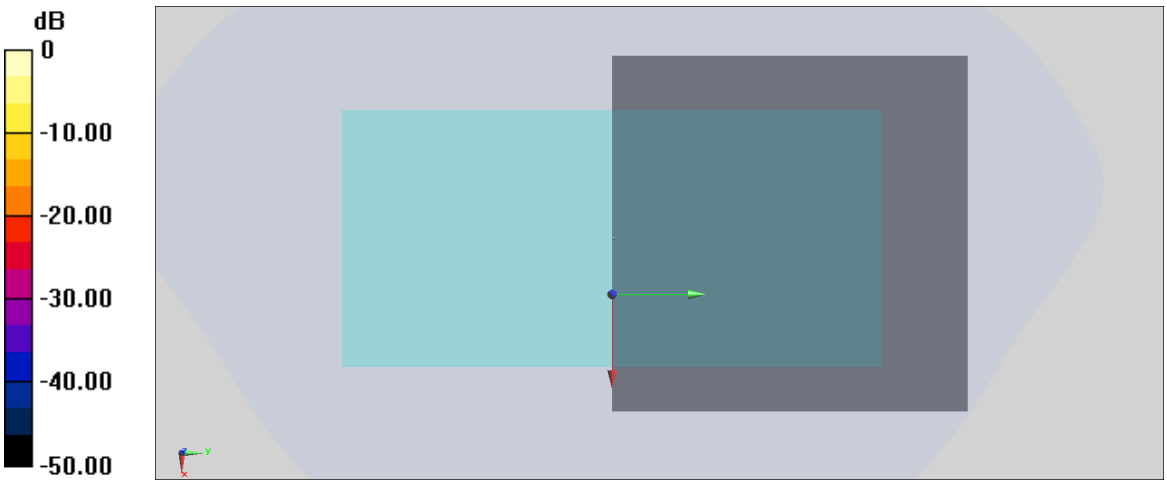

0 dB = 0 W/kg = -999.00 dBW/kg

#07_WLAN2.4GHz_802.11b 1Mbps_Right Side_0mm_Ch11;Ant 1+2

Communication System: 802.11b; Frequency: 2462 MHz;Duty Cycle: 1:1.165
Medium: HSL_2450_240319 Medium parameters used: f = 2462 MHz; σ = 1.856 S/m; ε_r = 39.097; ρ = 1000 kg/m^3
Ambient Temperature：23.7 ℃; Liquid Temperature：22.7 ℃

DASY5 Configuration:
- Probe: EX3DV4 - SN7692; ConvF(7.59, 7.41, 8.57) @ 2462 MHz; Calibrated: 2023/7/18
- Sensor-Surface: 1.4mm (Mechanical Surface Detection)
- Electronics: DAE4 Sn1311; Calibrated: 2023/9/13
- Phantom: SAM_Left; Type: QD000P40CD; Serial: 1719
- Measurement SW: DASY52, Version 52.10 (4);SEMCAD X Version 14.6.14 (7483)

Area Scan (61x91x1): Interpolated grid: dx=1.200 mm, dy=1.200 mm
Maximum value of SAR (interpolated) = 13.9 W/kg

Zoom Scan (7x7x7)/Cube 0: Measurement grid: dx=5mm, dy=5mm, dz=5mm
Reference Value = 79.62 V/m; Power Drift = 0.11 dB
Peak SAR (extrapolated) = 17.2 W/kg
SAR(1 g) = 7.2 W/kg; SAR(10 g) = 2.7 W/kg
Smallest distance from peaks to all points 3 dB below = 6 mm
Ratio of SAR at M2 to SAR at M1 = 43.9%
Maximum value of SAR (measured) = 13.4 W/kg

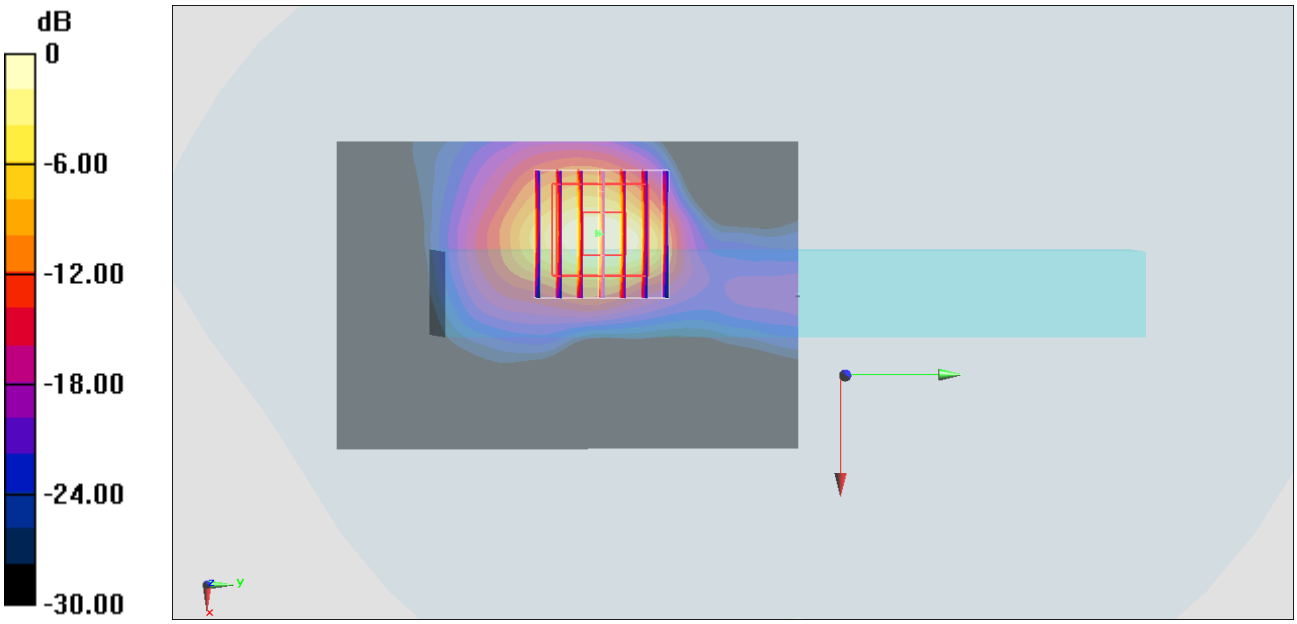

0 dB = 13.4 W/kg = 11.27 dBW/kg

#08_WLAN5GHz_802.11n-HT40 MCS0_Right Side_0mm_Ch54;Ant 1+2

Communication System: 802.11n ; Frequency: 5270 MHz;Duty Cycle: 1:1.165
Medium: HSL_5G_240320 Medium parameters used: f = 5270 MHz; σ = 4.775 S/m; ε_r = 37.127; ρ = 1000 kg/m^3
Ambient Temperature：23.6 ℃; Liquid Temperature：22.6 ℃

DASY5 Configuration:
- Probe: EX3DV4 - SN7692; ConvF(5.84, 5.74, 6.7) @ 5270 MHz; Calibrated: 2023/7/18
- Sensor-Surface: 1.4mm (Mechanical Surface Detection)
- Electronics: DAE4 Sn1311; Calibrated: 2023/9/13
- Phantom: SAM_Left; Type: QD000P40CD; Serial: 1719
- Measurement SW: DASY52, Version 52.10 (4);SEMCAD X Version 14.6.14 (7483)

Area Scan (61x111x1): Interpolated grid: dx=1.000 mm, dy=1.000 mm
Maximum value of SAR (interpolated) = 22.4 W/kg

Zoom Scan (7x7x7)/Cube 0: Measurement grid: dx=4mm, dy=4mm, dz=1.4mm
Reference Value = 84.20 V/m; Power Drift = -0.09 dB
Peak SAR (extrapolated) = 66.6 W/kg
SAR(1 g) = 11.2 W/kg; SAR(10 g) = 2.15 W/kg
Smallest distance from peaks to all points 3 dB below = 4.5 mm
Ratio of SAR at M2 to SAR at M1 = 61.8%
Maximum value of SAR (measured) = 37.5 W/kg

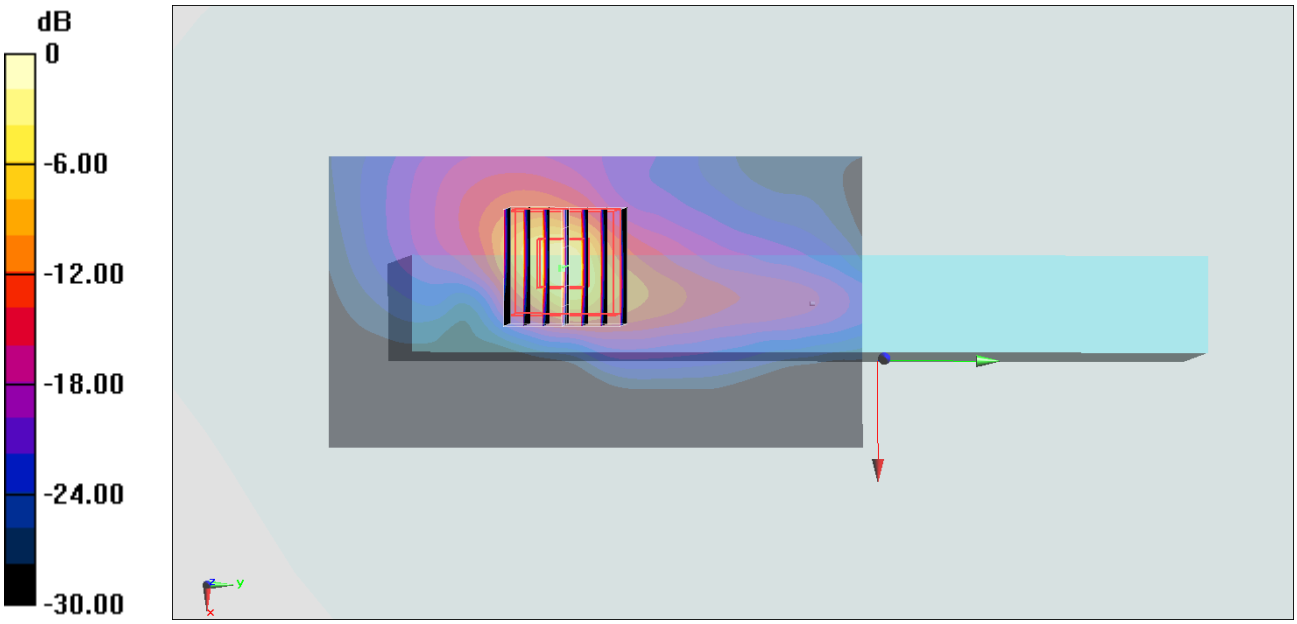

0 dB = 37.5 W/kg = 15.74 dBW/kg

#09_WLAN5GHz_802.11ac-VHT80 MCS0_Right Side_0mm_Ch138;Ant 1+2

Communication System: 802.11ac ; Frequency: 5690 MHz;Duty Cycle: 1:1.166
Medium: HSL_5G_240320 Medium parameters used : f = 5690 MHz; σ = 5.213 S/m; ε_r = 36.624; ρ = 1000 kg/m^3
Ambient Temperature：23.6 ℃; Liquid Temperature：22.6 ℃

DASY5 Configuration:
- Probe: EX3DV4 - SN7692;ConvF(5.23, 5.12, 5.97) @ 5690 MHz;Calibrated: 2023/7/18
- Sensor-Surface: 1.4mm (Mechanical Surface Detection)
- Electronics: DAE4 Sn1311; Calibrated: 2023/9/13
- Phantom: SAM_Left; Type: QD000P40CD; Serial: 1719
- Measurement SW: DASY52, Version 52.10 (4);SEMCAD X Version 14.6.14 (7483)

Area Scan (61x111x1): Interpolated grid: dx=1.000 mm, dy=1.000 mm
Maximum value of SAR (interpolated) = 30.4 W/kg

Configuration/Ch/Zoom Scan (7x7x7)/Cube 0: Measurement grid: dx=4mm, dy=4mm, dz=1.4mm
Reference Value = 92.73 V/m; Power Drift = -0.10 dB
Peak SAR (extrapolated) = 97.7 W/kg
SAR(1 g) = 14.5 W/kg; SAR(10 g) = 2.41 W/kg
Smallest distance from peaks to all points 3 dB below = 4.3 mm
Ratio of SAR at M2 to SAR at M1 = 58.8%
Maximum value of SAR (measured) = 49.2 W/kg

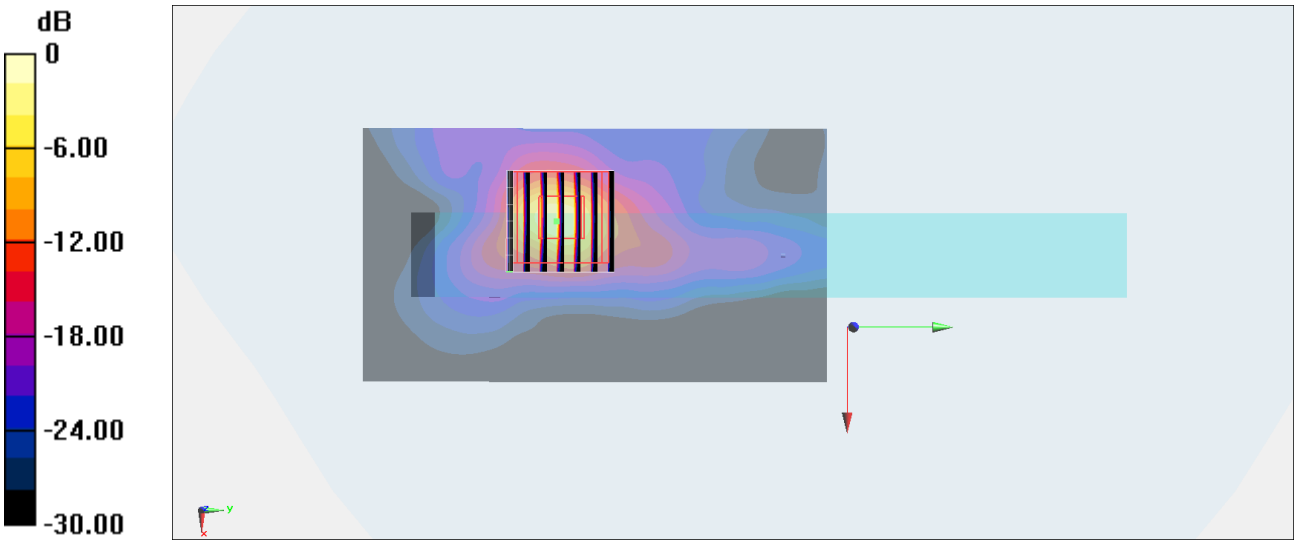

0 dB = 49.2 W/kg = 16.92 dBW/kg

#10_WLAN5GHz_802.11ac-VHT80 MCS0_Right Side_0mm_Ch155;Ant 1+2

Communication System: 802.11ac ; Frequency: 5775 MHz;Duty Cycle: 1:1.166
Medium: HSL_5G_240321 Medium parameters used: f = 5775 MHz; σ = 5.258 S/m; ε_r = 35.907; ρ = 1000 kg/m^3
Ambient Temperature：23.5 ℃; Liquid Temperature：22.5 ℃

DASY5 Configuration
- Probe: EX3DV4 - SN7692; ConvF(5.23, 5.12, 5.97) @ 5775 MHz; Calibrated: 2023/7/18
- Sensor-Surface: 1.4mm (Mechanical Surface Detection)
- Electronics: DAE4 Sn1311; Calibrated: 2023/9/13
- Phantom: SAM_Left; Type: QD000P40CD; Serial: 1719
- Measurement SW: DASY52, Version 52.10 (4); SEMCAD X Version 14.6.14 (7483)

Area Scan (61x111x1): Interpolated grid: dx=1.000 mm, dy=1.000 mm
Maximum value of SAR (interpolated) = 28.5 W/kg

Zoom Scan (7x7x7)/Cube 0: Measurement grid: dx=4mm, dy=4mm, dz=1.4mm
Reference Value = 44.92 V/m; Power Drift = 0.12 dB
Peak SAR (extrapolated) = 84.1 W/kg
SAR(1 g) = 12.2 W/kg; SAR(10 g) = 2.21 W/kg
Smallest distance from peaks to all points 3 dB below = 4 mm
Ratio of SAR at M2 to SAR at M1 = 58.3%
Maximum value of SAR (measured) = 40.5 W/kg

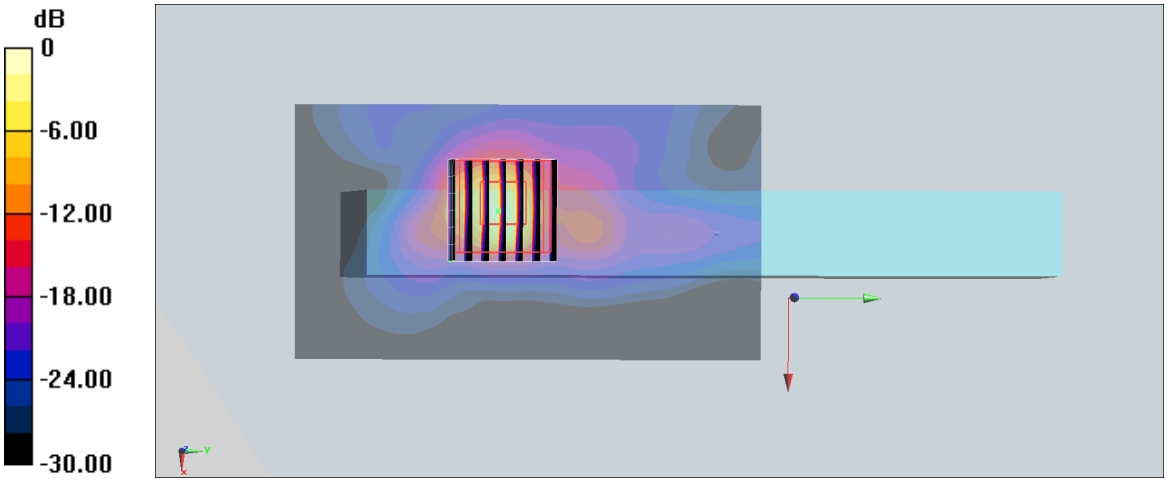

0 dB = 40.5 W/kg = 16.07 dBW/kg