System Check_Head_750MHz

DUT: D750V3-1012

Communication System: CW ; Frequency: 750 MHz;Duty Cycle: 1:1
Medium: HSL_750_161126 Medium parameters used: f = 750 MHz; σ = 0.903 S/m; ε_r = 43.368; ρ = 1000 kg/m^3
Ambient Temperature：23.7 ℃； Liquid Temperature：22.7 ℃

DASY5 Configuration
- Probe: EX3DV4 - SN3898; ConvF(10.43, 10.43, 10.43); Calibrated: 2016/7/11;
- Sensor-Surface: 1.4mm (Mechanical Surface Detection)
- Electronics: DAE4 Sn913; Calibrated: 2016/3/31
- Phantom: SAM LEFT; Type: QD000P40CD; Serial: TP:1718
- Measurement SW: DASY52, Version 52.8 (8); SEMCAD X Version 14.6.10 (7373)

Pin=250mW/Area Scan (61x61x1): Interpolated grid: dx=1.500 mm, dy=1.500 mm
Maximum value of SAR (interpolated) = 3.15 W/kg

Pin=250mW/Zoom Scan (5x5x7)/Cube 0: Measurement grid: dx=8mm, dy=8mm, dz=5mm
Reference Value = 61.66 V/m; Power Drift = -0.03 dB
Peak SAR (extrapolated) = 3.07 W/kg
SAR(1 g) = 2.12 W/kg; SAR(10 g) = 1.43 W/kg
Maximum value of SAR (measured) = 2.76 W/kg

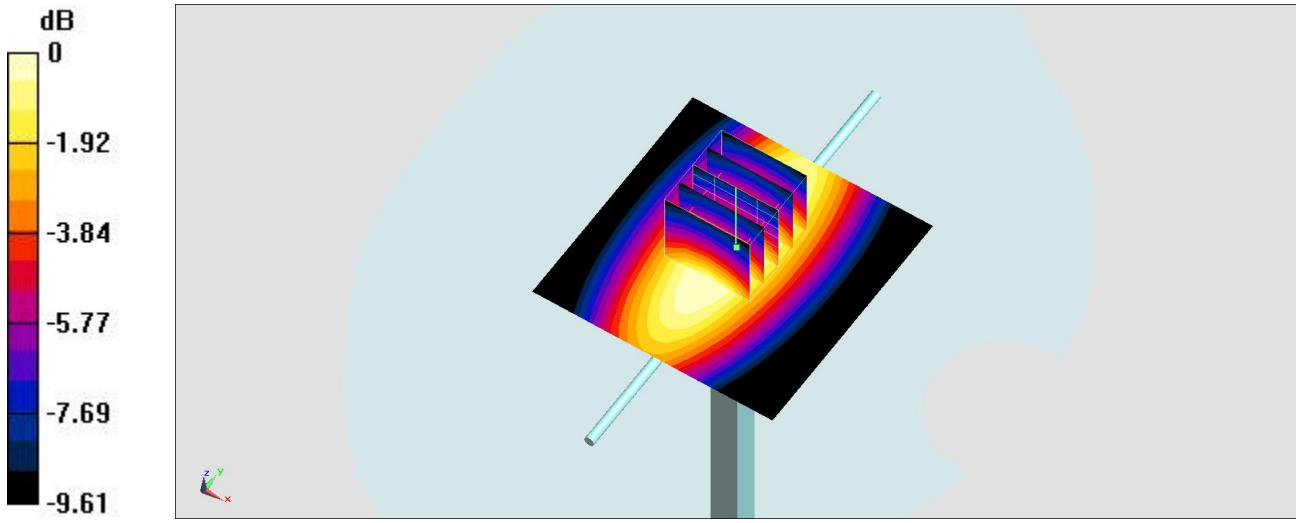

0 dB = 2.76 W/kg = 4.41 dBW/kg

System Check_Body_750MHz

DUT: D750V3-1012

Communication System: CW ; Frequency: 750 MHz;Duty Cycle: 1:1
Medium: MSL_750_161126 Medium parameters used: f = 750 MHz; σ = 0.955 S/m; ε_r = 54.706; ρ = 1000 kg/m^3
Ambient Temperature：23.7 ℃； Liquid Temperature：22.7 ℃

DASY5 Configuration
- Probe: EX3DV4 - SN3898; ConvF(9.95, 9.95, 9.95); Calibrated: 2016/7/11;
- Sensor-Surface: 1.4mm (Mechanical Surface Detection)
- Electronics: DAE4 Sn913; Calibrated: 2016/3/31
- Phantom: SAM_RIGHT; Type: QD000P40CD; Serial: 1719
- Measurement SW: DASY52, Version 52.8 (8); SEMCAD X Version 14.6.10 (7373)

Pin=250mW/Area Scan (61x61x1): Interpolated grid: dx=1.500 mm, dy=1.500 mm
Maximum value of SAR (interpolated) = 2.75 W/kg

Pin=250mW/Zoom Scan (5x5x7)/Cube 0: Measurement grid: dx=8mm, dy=8mm, dz=5mm
Reference Value = 56.06 V/m; Power Drift = -0.03 dB
Peak SAR (extrapolated) = 3.11 W/kg
SAR(1 g) = 2.07 W/kg; SAR(10 g) = 1.38 W/kg
Maximum value of SAR (measured) = 2.75 W/kg

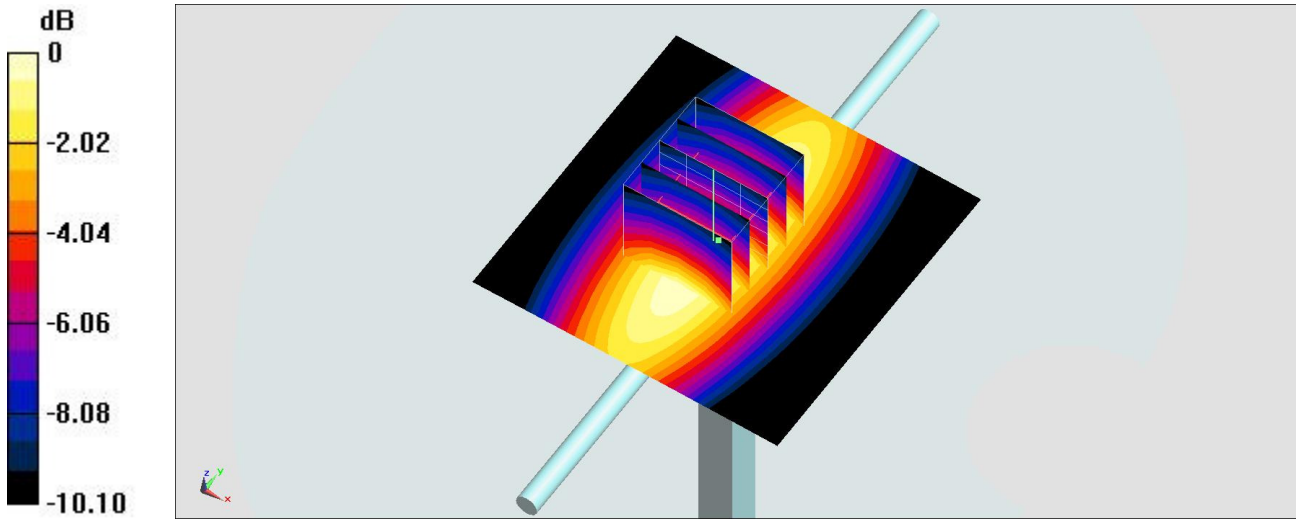

0 dB = 2.75 W/kg = 4.39 dBW/kg

System Check_Head_835MHz

DUT: D835V2-4d200

Communication System: CW; Frequency: 835 MHz;Duty Cycle: 1:1
Medium: HSL_850_161124 Medium parameters used: f = 835 MHz; σ = 0.881 S/m; ε_r = 41.209; ρ = 1000 kg/m^3
Ambient Temperature：23.4 ℃； Liquid Temperature：22.4 ℃

DASY5 Configuration
- Probe: EX3DV4 - SN3697; ConvF(8.51, 8.51, 8.51); Calibrated: 2016/10/25;
- Sensor-Surface: 1.4mm (Mechanical Surface Detection)
- Electronics: DAE4 Sn1388; Calibrated: 2016/10/10
- Phantom: SAM LEFT; Type: QD000P40CD; Serial: TP:1718
- Measurement SW: DASY52, Version 52.8 (8); SEMCAD X Version 14.6.10 (7373)

Pin=250mW/Area Scan (61x61x1): Interpolated grid: dx=1.500 mm, dy=1.500 mm
Maximum value of SAR (interpolated) = 3.07 W/kg

Pin=250mW/Zoom Scan (5x5x7)/Cube 0: Measurement grid: dx=8mm, dy=8mm, dz=5mm
Reference Value = 59.57 V/m; Power Drift = 0.03 dB
Peak SAR (extrapolated) = 3.56 W/kg
SAR(1 g) = 2.27 W/kg; SAR(10 g) = 1.48 W/kg
Maximum value of SAR (measured) = 3.09 W/kg

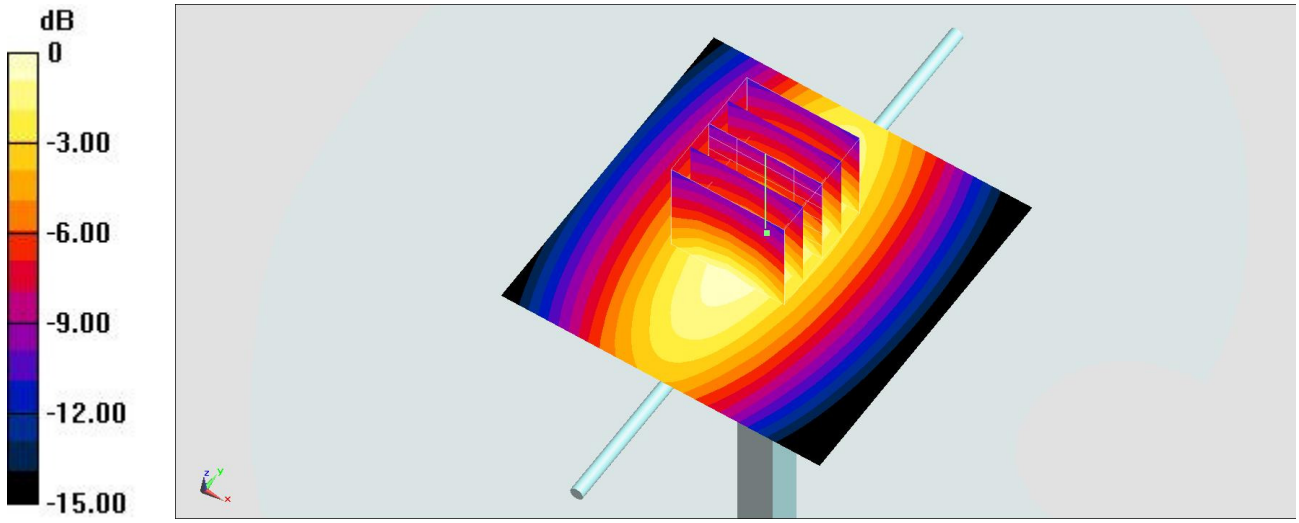

0 dB = 3.09 W/kg = 4.90 dBW/kg

System Check_Body_835MHz

DUT: D835V2-4d200

Communication System: CW; Frequency: 835 MHz;Duty Cycle: 1:1
Medium: MSL_850_161124 Medium parameters used: f = 835 MHz; σ = 0.971 S/m; ε_r = 57.283; ρ = 1000 kg/m^3
Ambient Temperature：23.6 ℃； Liquid Temperature：22.6 ℃

DASY5 Configuration
- Probe: EX3DV4 - SN3697; ConvF(8.79, 8.79, 8.79); Calibrated: 2016/10/25;
- Sensor-Surface: 1.4mm (Mechanical Surface Detection)
- Electronics: DAE4 Sn1388; Calibrated: 2016/10/10
- Phantom: SAM_RIGHT; Type: QD000P40CD; Serial: 1719
- Measurement SW: DASY52, Version 52.8 (8); SEMCAD X Version 14.6.10 (7373)

Pin=250mW/Area Scan (61x61x1): Interpolated grid: dx=1.500 mm, dy=1.500 mm
Maximum value of SAR (interpolated) = 3.24 W/kg

Pin=250mW/Zoom Scan (5x5x7)/Cube 0: Measurement grid: dx=8mm, dy=8mm, dz=5mm
Reference Value = 59.30 V/m; Power Drift = -0.01 dB
Peak SAR (extrapolated) = 3.65 W/kg
SAR(1 g) = 2.43 W/kg; SAR(10 g) = 1.62 W/kg
Maximum value of SAR (measured) = 3.23 W/kg

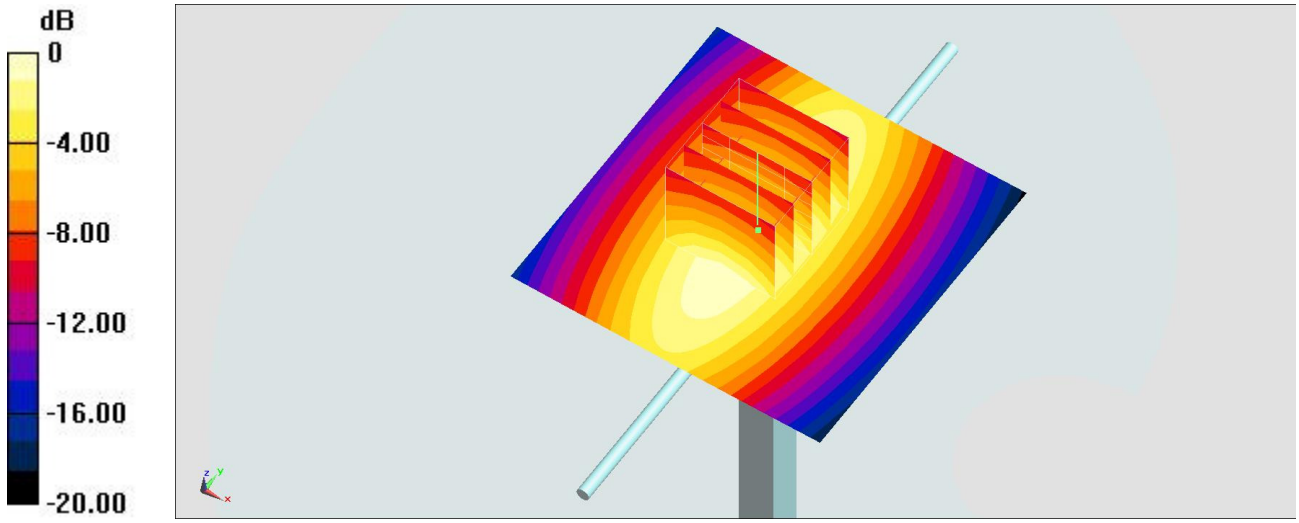

0 dB = 3.23 W/kg = 5.09 dBW/kg

System Check_Body_835MHz

DUT: D835V2-4d200

Communication System: CW; Frequency: 835 MHz;Duty Cycle: 1:1
Medium: MSL_850_161125 Medium parameters used: f = 835 MHz; σ = 0.976 S/m; ε_r = 56.627; ρ = 1000 kg/m^3
Ambient Temperature：23.3 ℃； Liquid Temperature：22.3 ℃

DASY5 Configuration
- Probe: EX3DV4 - SN3697; ConvF(8.79, 8.79, 8.79); Calibrated: 2016/10/25;
- Sensor-Surface: 1.4mm (Mechanical Surface Detection)
- Electronics: DAE4 Sn1388; Calibrated: 2016/10/10
- Phantom: SAM_RIGHT; Type: QD000P40CD; Serial: 1719
- Measurement SW: DASY52, Version 52.8 (8); SEMCAD X Version 14.6.10 (7373)

Pin=250mW/Area Scan (61x61x1): Interpolated grid: dx=1.500 mm, dy=1.500 mm
Maximum value of SAR (interpolated) = 3.31 W/kg

Pin=250mW/Zoom Scan (5x5x7)/Cube 0: Measurement grid: dx=8mm, dy=8mm, dz=5mm
Reference Value = 59.06 V/m; Power Drift = 0.08 dB
Peak SAR (extrapolated) = 3.79 W/kg
SAR(1 g) = 2.51 W/kg; SAR(10 g) = 1.66 W/kg
Maximum value of SAR (measured) = 3.32 W/kg

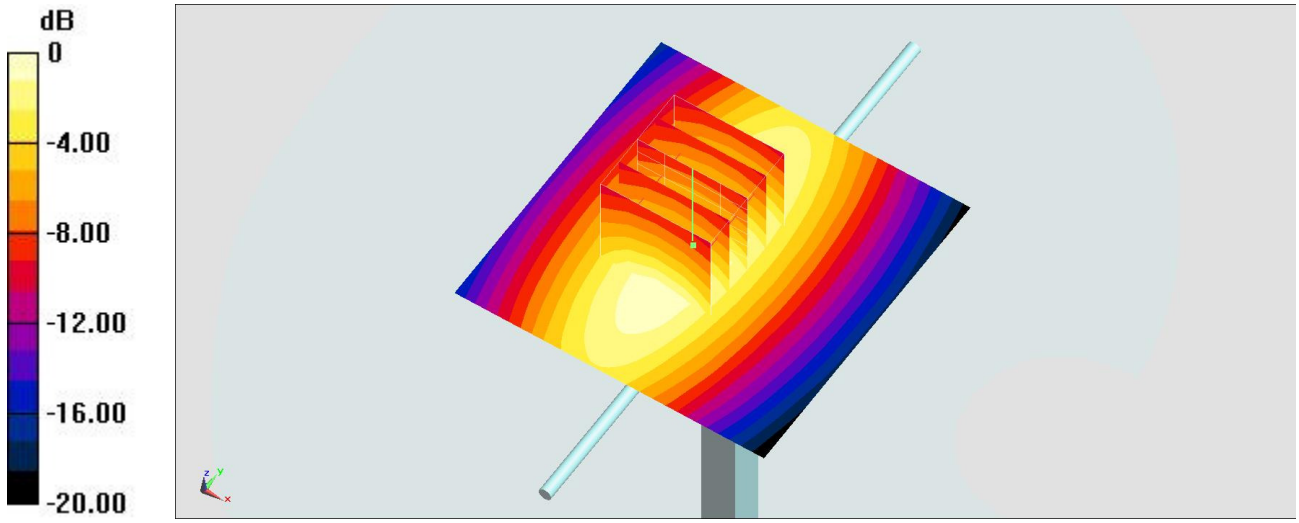

0 dB = 3.32 W/kg = 5.21 dBW/kg

System Check_Head_1750MHz

DUT: D1750V2-1023

Communication System: CW; Frequency: 1750 MHz;Duty Cycle: 1:1
Medium: HSL_1750_161128 Medium parameters used: f = 1750 MHz; σ = 1.386 S/m; ε_r = 41.797; ρ = 1000 kg/m^3
Ambient Temperature：23.2 ℃； Liquid Temperature：22.2 ℃

DASY5 Configuration
- Probe: EX3DV4 - SN3898; ConvF(8.39, 8.39, 8.39); Calibrated: 2016/7/11;
- Sensor-Surface: 1.4mm (Mechanical Surface Detection)
- Electronics: DAE4 Sn913; Calibrated: 2016/3/31
- Phantom: SAM_RIGHT; Type: QD000P40CD; Serial: 1719
- Measurement SW: DASY52, Version 52.8 (8); SEMCAD X Version 14.6.10 (7373)

Pin=250mW/Area Scan (61x61x1): Interpolated grid: dx=1.500 mm, dy=1.500 mm
Maximum value of SAR (interpolated) = 13.8 W/kg

Pin=250mW/Zoom Scan (5x5x7)/Cube 0: Measurement grid: dx=8mm, dy=8mm, dz=5mm
Reference Value = 102.3 V/m; Power Drift = -0.01 dB
Peak SAR (extrapolated) = 16.4 W/kg
SAR(1 g) = 8.97 W/kg; SAR(10 g) = 4.79 W/kg
Maximum value of SAR (measured) = 13.5 W/kg

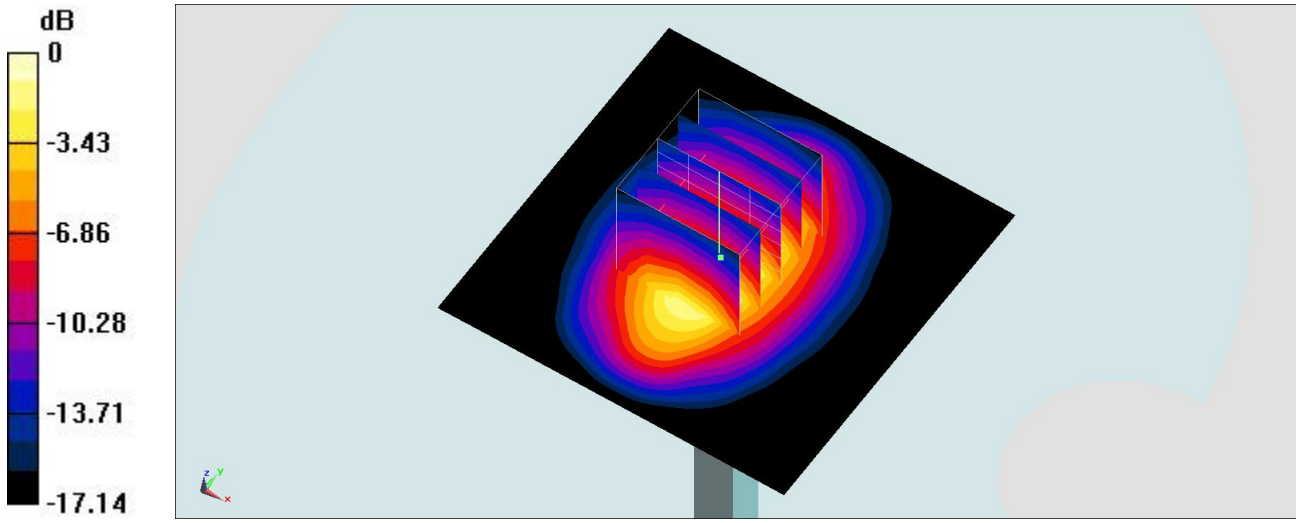

0 dB = 13.5 W/kg = 11.30 dBW/kg

System Check_Body_1750MHz

DUT: D1750V2-1023

Communication System: CW; Frequency: 1750 MHz;Duty Cycle: 1:1
Medium: MSL_1750_161206 Medium parameters used: f = 1750 MHz; σ = 1.475 S/m; ε_r = 55.685; ρ = 1000 kg/m^3
Ambient Temperature：23.5 ℃； Liquid Temperature：22.5 ℃

DASY5 Configuration
- Probe: EX3DV4 - SN3898; ConvF(8.09, 8.09, 8.09); Calibrated: 2016/7/11;
- Sensor-Surface: 1.4mm (Mechanical Surface Detection)
- Electronics: DAE4 Sn913; Calibrated: 2016/3/31
- Phantom: SAM_RIGHT; Type: QD000P40CD; Serial: 1719
- Measurement SW: DASY52, Version 52.8 (8); SEMCAD X Version 14.6.10 (7373)

Pin=250mW/Area Scan (61x61x1): Interpolated grid: dx=1.500 mm, dy=1.500 mm
Maximum value of SAR (interpolated) = 13.5 W/kg

Pin=250mW/Zoom Scan (5x5x7)/Cube 0: Measurement grid: dx=8mm, dy=8mm, dz=5mm
Reference Value = 96.01 V/m; Power Drift = 0.16 dB
Peak SAR (extrapolated) = 16.1 W/kg
SAR(1 g) = 9.23 W/kg; SAR(10 g) = 4.95 W/kg
Maximum value of SAR (measured) = 13.9 W/kg

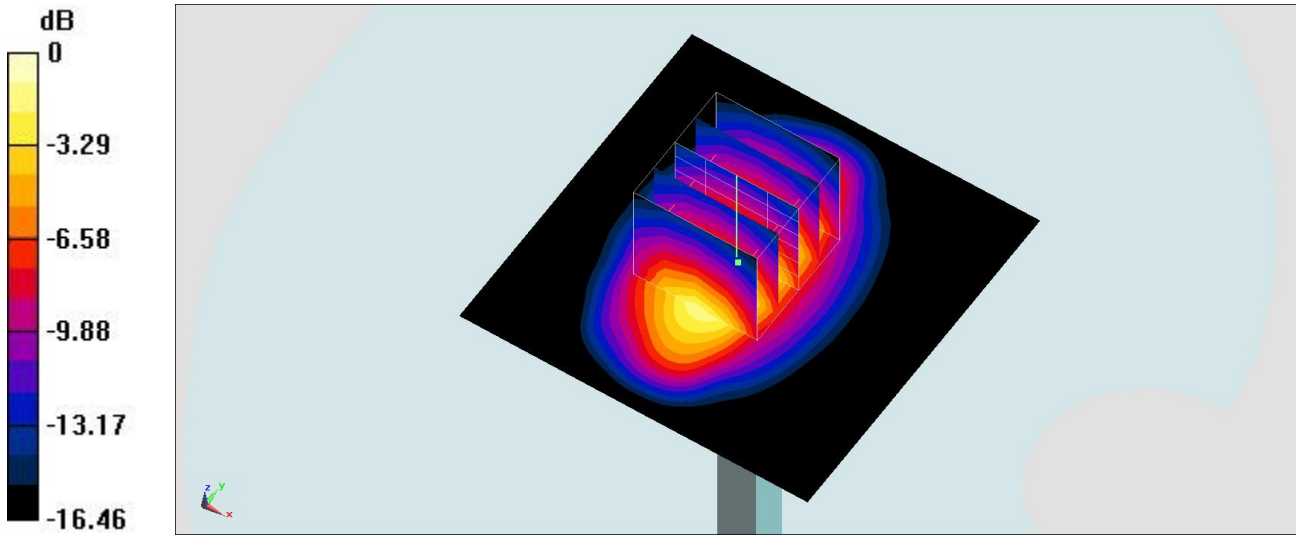

0 dB = 13.9 W/kg = 11.43 dBW/kg

System Check_Body_1750MHz

DUT: D1750V2-1023

Communication System: CW ; Frequency: 1750 MHz;Duty Cycle: 1:1
Medium: MSL_1750_161211 Medium parameters used: f = 1750 MHz; σ = 1.46 S/m; ε_r = 55.233; ρ = 1000 kg/m^3
Ambient Temperature：23.5 ℃ ; Liquid Temperature：22.5 ℃

DASY5 Configuration:
- Probe: EX3DV4 - SN3931; ConvF(8.45, 8.45, 8.45); Calibrated: 2016/10/3;
- Sensor-Surface: 1.4mm (Mechanical Surface Detection)
- Electronics: DAE3 Sn577; Calibrated: 2016/9/28
- Phantom: SAM_Right; Type: QD000P40CD; Serial: TP:1383
- Measurement SW: DASY52, Version 52.8 (8);SEMCAD X Version 14.6.10 (7331)

Pin=250mW/Area Scan (61x61x1): Interpolated grid: dx=1.500 mm, dy=1.500 mm
Maximum value of SAR (interpolated) = 13.8 W/kg

Pin=250mW/Zoom Scan (5x5x7)/Cube 0: Measurement grid: dx=8mm, dy=8mm, dz=5mm
Reference Value = 95.61 V/m; Power Drift = -0.11 dB
Peak SAR (extrapolated) = 14.5 W/kg
SAR(1 g) = 8.39 W/kg; SAR(10 g) = 4.6 W/kg
Maximum value of SAR (measured) = 12.3 W/kg

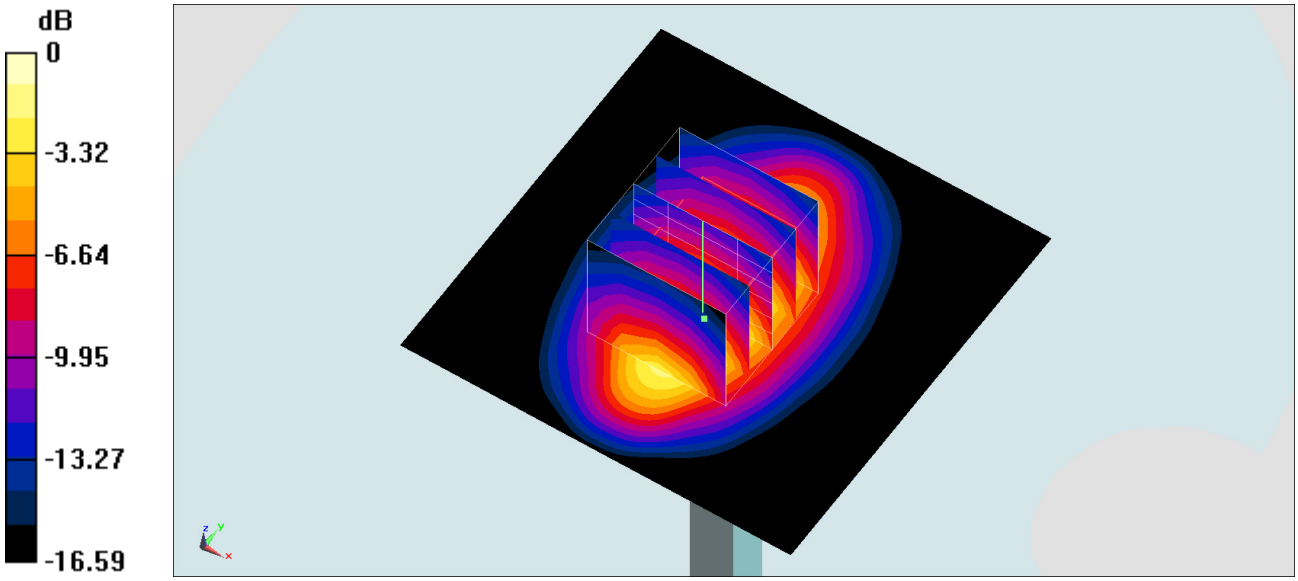

0 dB = 12.3 W/kg = 10.90 dBW/kg

System Check_Head_1900MHz

DUT: D1900V2-5d210

Communication System: CW; Frequency: 1900 MHz;Duty Cycle: 1:1
Medium: HSL_1900_161128 Medium parameters used: f = 1900 MHz; σ = 1.41 S/m; ε_r = 41.66; ρ = 1000 kg/m^3
Ambient Temperature：23.2 ℃； Liquid Temperature：22.2 ℃

DASY5 Configuration
- Probe: EX3DV4 - SN3898; ConvF(8.06, 8.06, 8.06); Calibrated: 2016/7/11;
- Sensor-Surface: 1.4mm (Mechanical Surface Detection)
- Electronics: DAE4 Sn913; Calibrated: 2016/3/31
- Phantom: SAM_RIGHT; Type: QD000P40CD; Serial: 1719
- Measurement SW: DASY52, Version 52.8 (8); SEMCAD X Version 14.6.10 (7373)

Pin=250mW/Area Scan (61x61x1): Interpolated grid: dx=1.500 mm, dy=1.500 mm
Maximum value of SAR (interpolated) = 14.8 W/kg

Pin=250mW/Zoom Scan (5x5x7)/Cube 0: Measurement grid: dx=8mm, dy=8mm, dz=5mm
Reference Value = 100.6 V/m; Power Drift = 0.17 dB
Peak SAR (extrapolated) = 18.3 W/kg
SAR(1 g) = 9.85 W/kg; SAR(10 g) = 5.11 W/kg
Maximum value of SAR (measured) = 15.4 W/kg

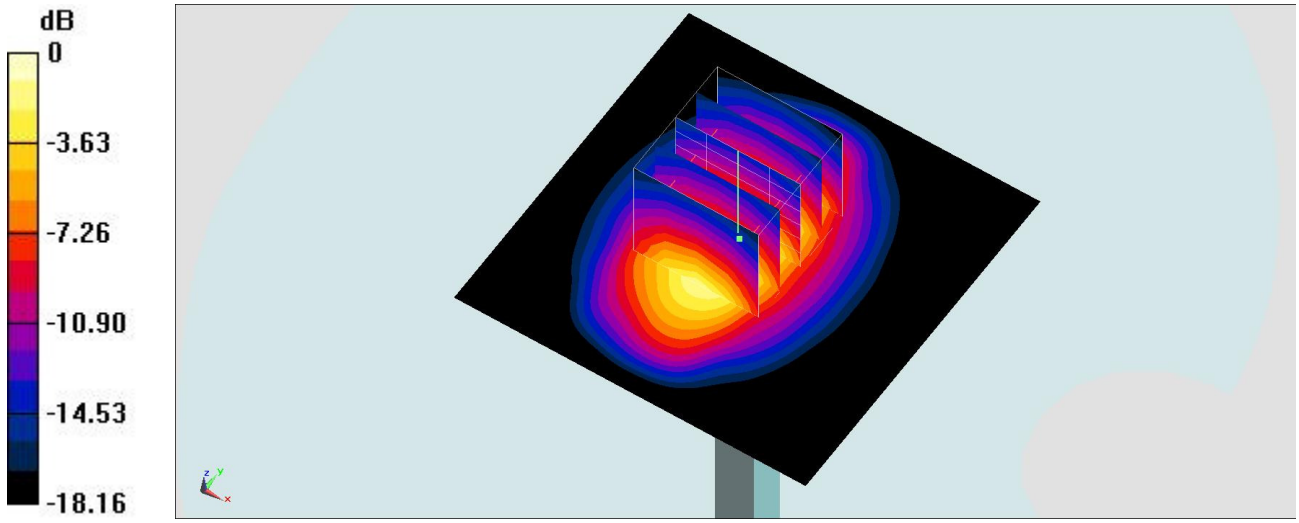

0 dB = 15.4 W/kg = 11.88 dBW/kg

System Check_Body_1900MHz

DUT: D1900V2-5d210

Communication System: CW; Frequency: 1900 MHz;Duty Cycle: 1:1
Medium: MSL_1900_161130 Medium parameters used: f = 1900 MHz; σ = 1.518 S/m; ε_r = 54.185; ρ = 1000 kg/m^3
Ambient Temperature：23.3 ℃； Liquid Temperature：22.3 ℃

DASY5 Configuration
- Probe: EX3DV4 - SN3898; ConvF(7.81, 7.81, 7.81); Calibrated: 2016/7/11;
- Sensor-Surface: 1.4mm (Mechanical Surface Detection)
- Electronics: DAE4 Sn913; Calibrated: 2016/3/31
- Phantom: SAM_RIGHT; Type: QD000P40CD; Serial: 1719
- Measurement SW: DASY52, Version 52.8 (8); SEMCAD X Version 14.6.10 (7373)

Pin=250mW/Area Scan (61x61x1): Interpolated grid: dx=1.500 mm, dy=1.500 mm
Maximum value of SAR (interpolated) = 14.8 W/kg

Pin=250mW/Zoom Scan (5x5x7)/Cube 0: Measurement grid: dx=8mm, dy=8mm, dz=5mm
Reference Value = 103.1 V/m; Power Drift = -0.15 dB
Peak SAR (extrapolated) = 16.9 W/kg
SAR(1 g) = 9.56 W/kg; SAR(10 g) = 5 W/kg
Maximum value of SAR (measured) = 14.4 W/kg

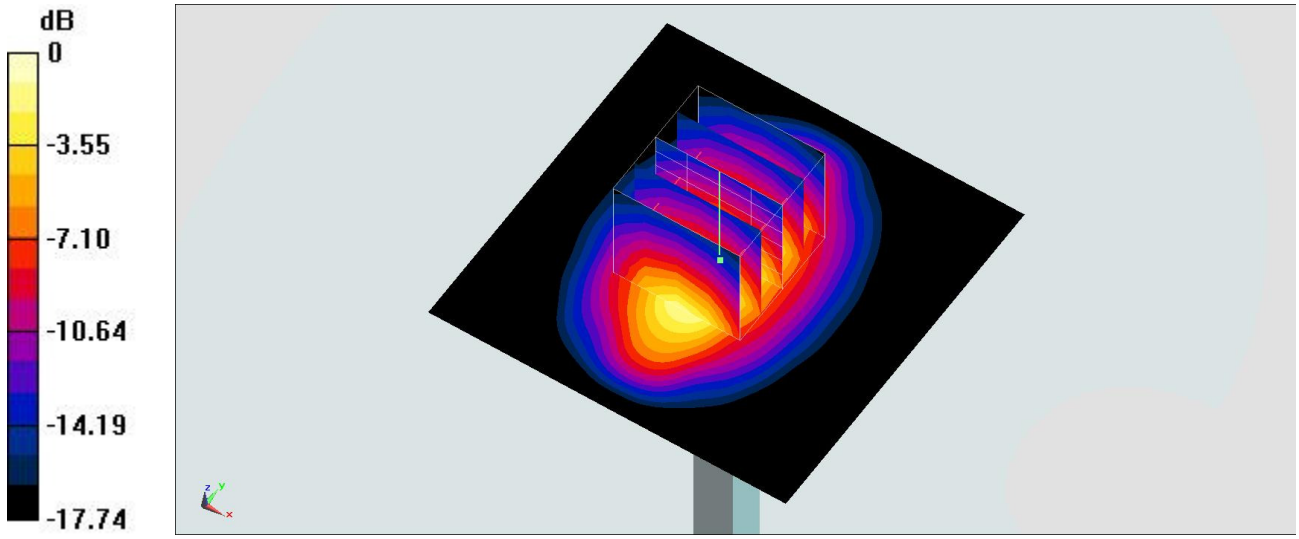

0 dB = 14.4 W/kg = 11.58 dBW/kg

System Check_Body_1900MHz

DUT: D1900V2-5d210

Communication System: CW; Frequency: 1900 MHz;Duty Cycle: 1:1
Medium: MSL_1900_161201 Medium parameters used: f = 1900 MHz; σ = 1.583 S/m; ε_r = 54.248; ρ = 1000 kg/m^3
Ambient Temperature：23.7 ℃； Liquid Temperature：22.7 ℃

DASY5 Configuration
- Probe: EX3DV4 - SN3898; ConvF(7.81, 7.81, 7.81); Calibrated: 2016/7/11;
- Sensor-Surface: 1.4mm (Mechanical Surface Detection)
- Electronics: DAE4 Sn913; Calibrated: 2016/3/31
- Phantom: SAM_RIGHT; Type: QD000P40CD; Serial: 1719
- Measurement SW: DASY52, Version 52.8 (8); SEMCAD X Version 14.6.10 (7373)

Pin=250mW/Area Scan (61x61x1): Interpolated grid: dx=1.500 mm, dy=1.500 mm
Maximum value of SAR (interpolated) = 15.4 W/kg

Pin=250mW/Zoom Scan (5x5x7)/Cube 0: Measurement grid: dx=8mm, dy=8mm, dz=5mm
Reference Value = 102.9 V/m; Power Drift = 0.01 dB
Peak SAR (extrapolated) = 17.9 W/kg
SAR(1 g) = 10.1 W/kg; SAR(10 g) = 5.29 W/kg
Maximum value of SAR (measured) = 15.2 W/kg

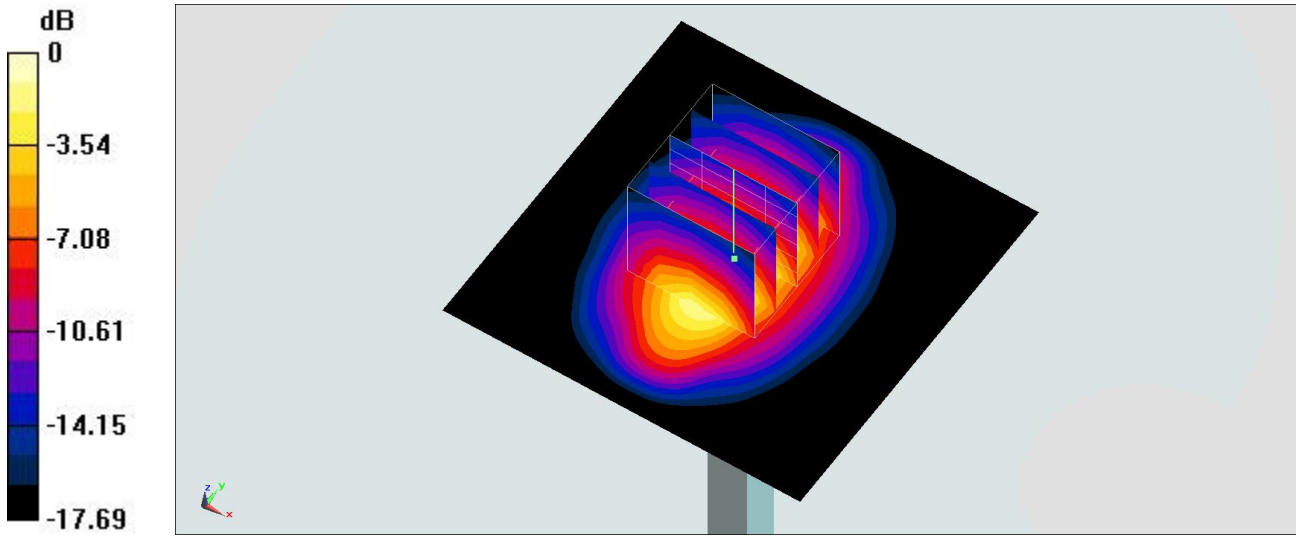

0 dB = 15.2 W/kg = 11.82 dBW/kg

System Check_Body_1900MHz

DUT: D1900V2-5d210

Communication System: CW; Frequency: 1900 MHz;Duty Cycle: 1:1
Medium: MSL_1900_161206 Medium parameters used: f = 1900 MHz; σ = 1.526 S/m; ε_r = 54.393; ρ = 1000 kg/m^3
Ambient Temperature：23.5 ℃； Liquid Temperature：22.5 ℃

DASY5 Configuration
- Probe: EX3DV4 - SN3898; ConvF(7.81, 7.81, 7.81); Calibrated: 2016/7/11;
- Sensor-Surface: 1.4mm (Mechanical Surface Detection)
- Electronics: DAE4 Sn913; Calibrated: 2016/3/31
- Phantom: SAM_RIGHT; Type: QD000P40CD; Serial: 1719
- Measurement SW: DASY52, Version 52.8 (8); SEMCAD X Version 14.6.10 (7373)

Pin=250mW/Area Scan (61x61x1): Interpolated grid: dx=1.500 mm, dy=1.500 mm
Maximum value of SAR (interpolated) = 14.9 W/kg

Pin=250mW/Zoom Scan (5x5x7)/Cube 0: Measurement grid: dx=8mm, dy=8mm, dz=5mm
Reference Value = 99.28 V/m; Power Drift = 0.14 dB
Peak SAR (extrapolated) = 18.1 W/kg
SAR(1 g) = 10.1 W/kg; SAR(10 g) = 5.2 W/kg
Maximum value of SAR (measured) = 15.5 W/kg

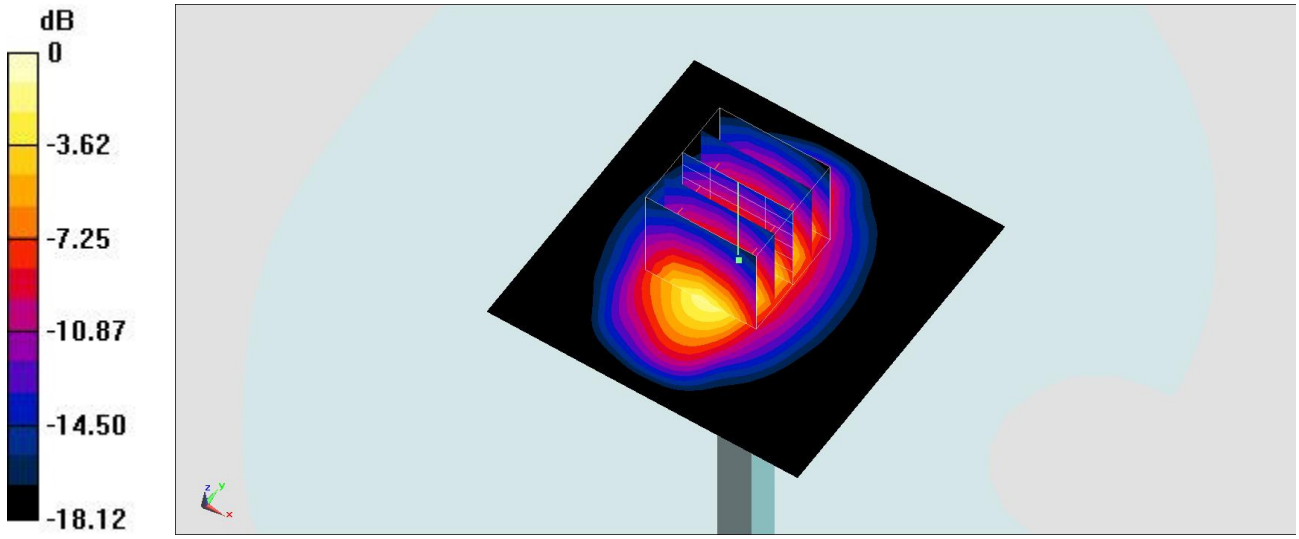

0 dB = 15.5 W/kg = 11.90 dBW/kg

System Check_Body_1900MHz

DUT: D1900V2-5d041

Communication System: CW; Frequency: 1900 MHz;Duty Cycle: 1:1
Medium: MSL_1900_161210 Medium parameters used: f = 1900 MHz; σ = 1.556 S/m; ε_r = 54.999; ρ = 1000 kg/m^3
Ambient Temperature：23.5 ℃ ; Liquid Temperature：22.5 ℃

DASY5 Configuration:
- Probe: EX3DV4 - SN3931; ConvF(8.14, 8.14, 8.14); Calibrated: 2016/10/3;
- Sensor-Surface: 1.4mm (Mechanical Surface Detection)
- Electronics: DAE3 Sn577; Calibrated: 2016/9/28
- Phantom: SAM_Right; Type: QD000P40CD; Serial: TP:1383
- Measurement SW: DASY52, Version 52.8 (8);SEMCAD X Version 14.6.10 (7331)

Pin=250mW/Area Scan (61x61x1): Interpolated grid: dx=1.500 mm, dy=1.500 mm
Maximum value of SAR (interpolated) = 14.9 W/kg

Pin=250mW/Zoom Scan (5x5x7)/Cube 0: Measurement grid: dx=8mm, dy=8mm, dz=5mm
Reference Value = 100.5 V/m; Power Drift = -0.01 dB
Peak SAR (extrapolated) = 16.7 W/kg
SAR(1 g) = 9.32 W/kg; SAR(10 g) = 4.91 W/kg
Maximum value of SAR (measured) = 14.2 W/kg

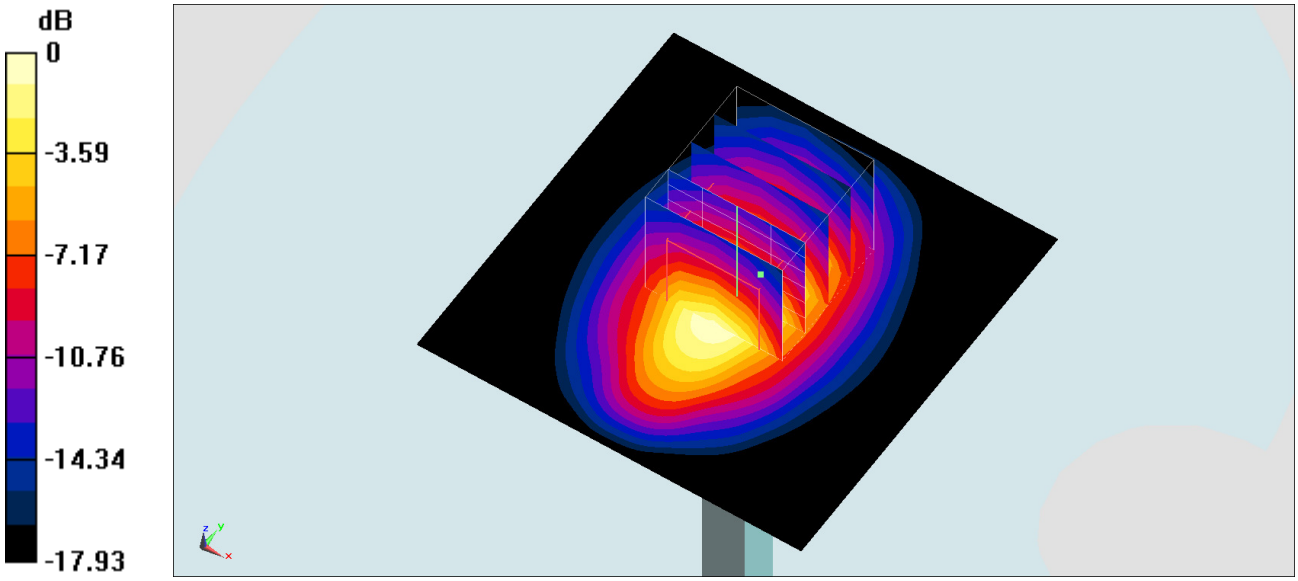

0 dB = 14.2 W/kg = 11.52 dBW/kg

System Check_Head_2450MHz

DUT: D2450V2-736

Communication System: CW; Frequency: 2450 MHz;Duty Cycle: 1:1
Medium: HSL_2450_161125 Medium parameters used: f = 2450 MHz; σ = 1.813 S/m; ε_r = 40.435; ρ = 1000 kg/m^3
Ambient Temperature：23.2 ℃; Liquid Temperature：22.2 ℃

DASY5 Configuration
- Probe: EX3DV4 - SN3898; ConvF(7.33, 7.33, 7.33); Calibrated: 2016/7/11;
- Sensor-Surface: 1.4mm (Mechanical Surface Detection)
- Electronics: DAE4 Sn913; Calibrated: 2016/3/31
- Phantom: SAM_Right; Type: QD000P40CD; Serial: S/N:1801
- Measurement SW: DASY52, Version 52.8 (8); SEMCAD X Version 14.6.10 (7373)

Pin=250mW/Area Scan (71x71x1): Interpolated grid: dx=1.200 mm, dy=1.200 mm
Maximum value of SAR (interpolated) = 21.8 W/kg

Pin=250mW/Zoom Scan (7x7x7)/Cube 0: Measurement grid: dx=5mm, dy=5mm, dz=5mm
Reference Value = 111.5 V/m; Power Drift = -0.14 dB
Peak SAR (extrapolated) = 25.8 W/kg
SAR(1 g) = 12.4 W/kg; SAR(10 g) = 5.79 W/kg
Maximum value of SAR (measured) = 20.7 W/kg

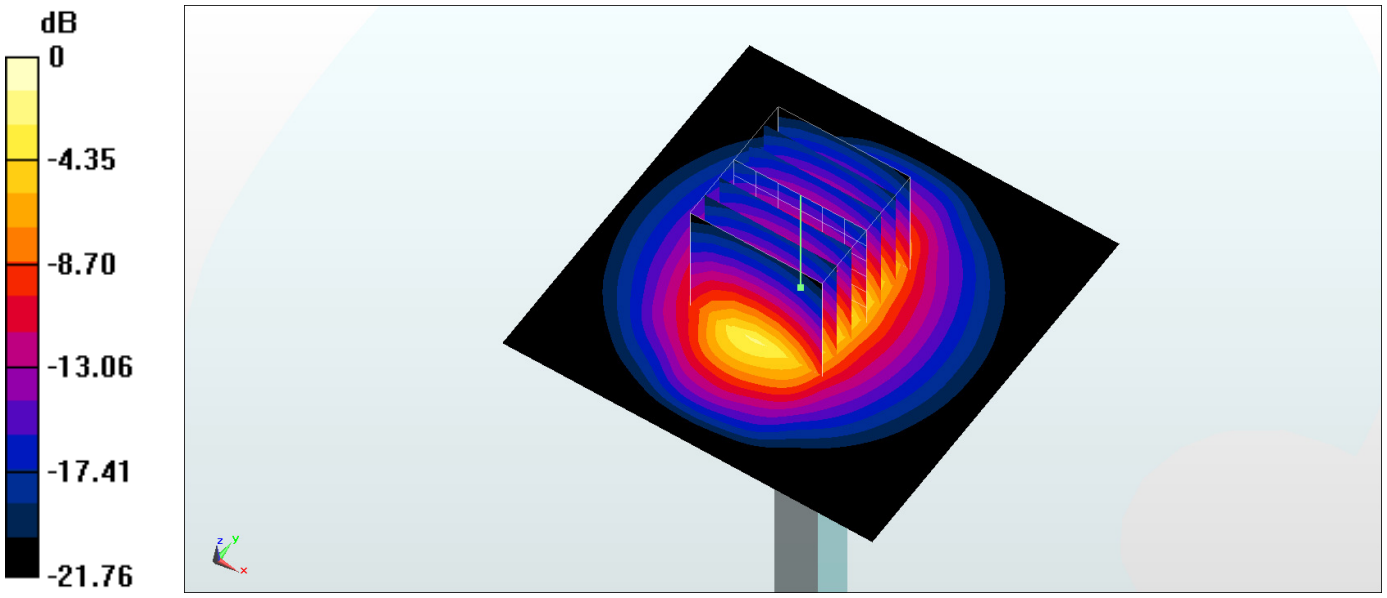

0 dB = 20.7 W/kg = 13.16 dBW/kg

System Check_Body_2450MHz

DUT: D2450V2-736

Communication System: CW; Frequency: 2450 MHz;Duty Cycle: 1:1
Medium: MSL_2450_161125 Medium parameters used: f = 2450 MHz; σ = 1.993 S/m; ε_r = 55.011; ρ = 1000 kg/m^3
Ambient Temperature：23.3 ℃; Liquid Temperature：22.3 ℃

DASY5 Configuration
- Probe: EX3DV4 - SN3898; ConvF(7.42, 7.42, 7.42); Calibrated: 2016/7/11;
- Sensor-Surface: 1.4mm (Mechanical Surface Detection)
- Electronics: DAE4 Sn679; Calibrated: 2016/6/13
- Phantom: SAM_Right; Type: QD000P40CD; Serial: S/N:1801
- Measurement SW: DASY52, Version 52.8 (8); SEMCAD X Version 14.6.10 (7373)

Pin=250mW/Area Scan (61x61x1): Interpolated grid: dx=1.200 mm, dy=1.200 mm
Maximum value of SAR (interpolated) = 20.8 W/kg

Pin=250mW/Zoom Scan (7x7x7)/Cube 0: Measurement grid: dx=5mm, dy=5mm, dz=5mm
Reference Value = 104.3 V/m; Power Drift = -0.18 dB
Peak SAR (extrapolated) = 24.8 W/kg
SAR(1 g) = 12.2 W/kg; SAR(10 g) = 5.74 W/kg
Maximum value of SAR (measured) = 20.2 W/kg

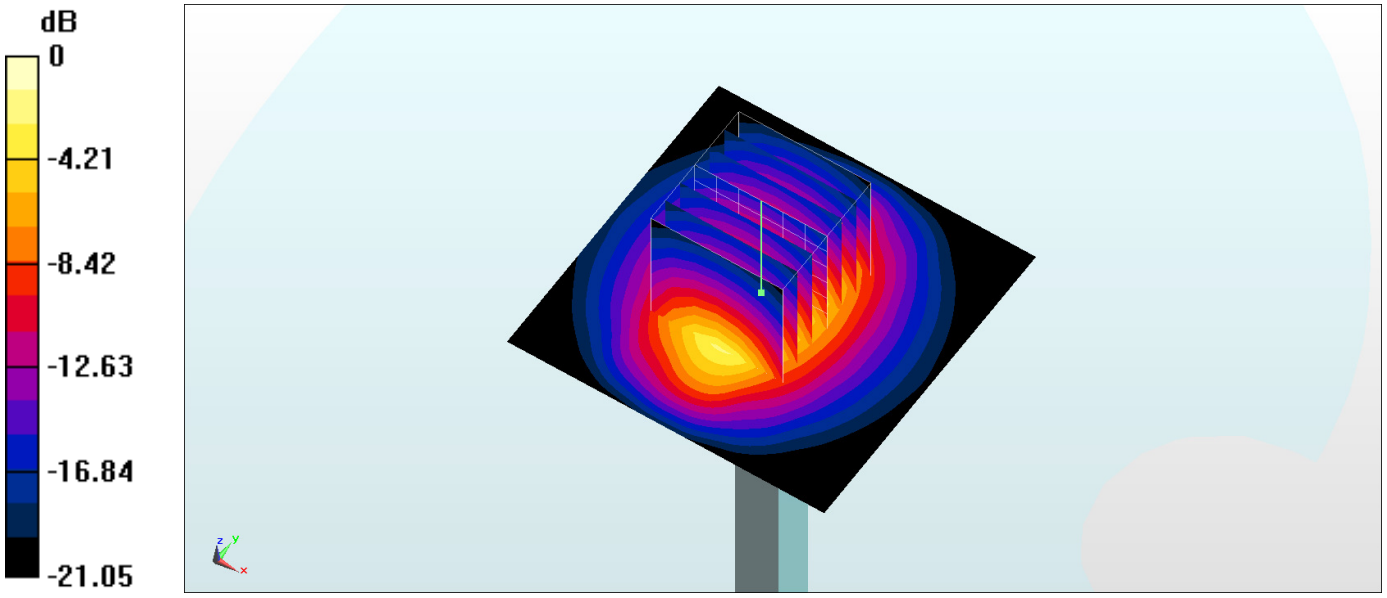

0 dB = 20.2 W/kg = 13.05 dBW/kg

Test Laboratory: Sporton International Inc. SAR/HAC Testing Lab Date: 2016/11/28

System Check_Body_5200MHz

DUT: D5GHzV2-1040

Communication System: CW ; Frequency: 5200 MHz;Duty Cycle: 1:1
Medium: MSL_5G_161128 Medium parameters used: f = 5200 MHz; σ = 5.47 mho/m; ε_r = 47.1; ρ = 1000 kg/m^3
Ambient Temperature：23.5 ℃; Liquid Temperature：22.5 ℃

DASY4 Configuration:
- Probe: EX3DV4 - SN3925; ConvF(4.39, 4.39, 4.39); Calibrated: 2016/5/26
- Sensor-Surface: 1.4mm (Mechanical Surface Detection)
- Electronics: DAE3 Sn495; Calibrated: 2016/5/27
- Phantom: SAM_Right; Type: QD000P40CD; Serial: TP:1383
- ;Postprocessing SW: SEMCAD, V1.8 Build 159

Pin=100mW/Area Scan (71x71x1): Measurement grid: dx=10mm, dy=10mm
Maximum value of SAR (interpolated) = 18.1 mW/g

Pin=100mW/Zoom Scan (7x7x7)/Cube 0: Measurement grid: dx=4mm, dy=4mm, dz=1.4mm
Reference Value = 66.3 V/m; Power Drift = 0.017 dB
Peak SAR (extrapolated) = 30.0 W/kg
SAR(1 g) = 7.65 mW/g; SAR(10 g) = 2.09 mW/g
Maximum value of SAR (measured) = 18.5 mW/g

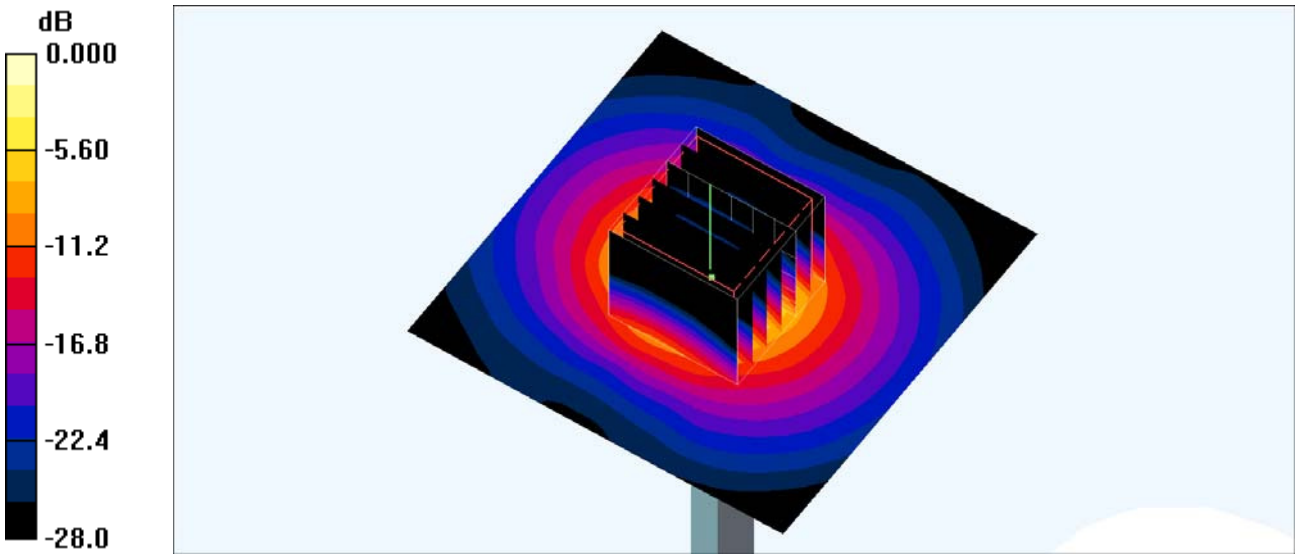

0 dB = 18.5mW/g

System Check_Head_5250MHz

DUT: D5GHzV2-1006

Communication System: CW; Frequency: 5250 MHz;Duty Cycle: 1:1
Medium: HSL_5G_161126 Medium parameters used: f = 5250 MHz; σ = 4.594 S/m; ε_r = 36.635; ρ = 1000 kg/m^3
Ambient Temperature：23.5 ℃; Liquid Temperature：22.5 ℃

DASY5 Configuration
- Probe: EX3DV4 - SN3898; ConvF(5.32, 5.32, 5.32); Calibrated: 2016/7/11;
- Sensor-Surface: 1.4mm (Mechanical Surface Detection)
- Electronics: DAE4 Sn913; Calibrated: 2016/3/31
- Phantom: SAM_Right; Type: QD000P40CD; Serial: S/N:1801
- Measurement SW: DASY52, Version 52.8 (8); SEMCAD X Version 14.6.10 (7373)

Pin=100mW/Area Scan (71x71x1): Interpolated grid: dx=1.000 mm, dy=1.000 mm
Maximum value of SAR (interpolated) = 16.8 W/kg

Pin=100mW/Zoom Scan (7x7x7)/Cube 0: Measurement grid: dx=4mm, dy=4mm, dz=1.4mm
Reference Value = 67.58 V/m; Power Drift = 0.07 dB
Peak SAR (extrapolated) = 32.6 W/kg
SAR(1 g) = 7.99 W/kg; SAR(10 g) = 2.25 W/kg
Maximum value of SAR (measured) = 19.5 W/kg

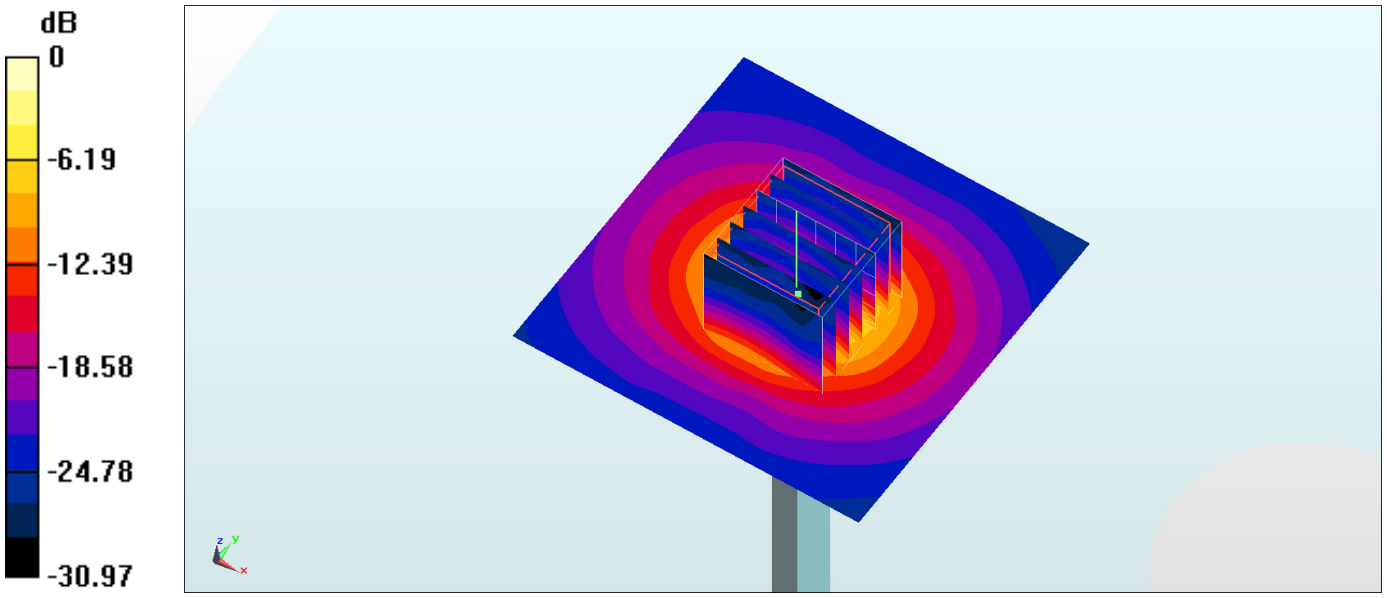

0 dB = 19.5 W/kg = 12.90 dBW/kg

System Check_Body_5300MHz

DUT: D5GHzV2-1040

Communication System: CW; Frequency: 5300 MHz;Duty Cycle: 1:1
Medium: MSL_5G_161129 Medium parameters used: f = 5300 MHz; σ = 5.52 mho/m; ε_r = 47; ρ = 1000 kg/m^3
Ambient Temperature：23.6 ℃； Liquid Temperature：22.6 ℃

DASY4 Configuration:
- Probe: EX3DV4 - SN3925; ConvF(4.22, 4.22, 4.22); Calibrated: 2016/5/26
- Sensor-Surface: 1.4mm (Mechanical Surface Detection)
- Electronics: DAE3 Sn495; Calibrated: 2016/5/27
- Phantom: SAM_Right; Type: QD000P40CD; Serial: TP:1383
- ;Postprocessing SW: SEMCAD, V1.8 Build 159

Pin=100mW/Area Scan (71x71x1): Measurement grid: dx=10mm, dy=10mm
Maximum value of SAR (interpolated) = 20.1 mW/g

Pin=100mW/Zoom Scan (7x7x7)/Cube 0: Measurement grid: dx=4mm, dy=4mm, dz=1.4mm
Reference Value = 66.1 V/m; Power Drift = 0.116 dB
Peak SAR (extrapolated) = 30.5 W/kg
SAR(1 g) = 7.7 mW/g; SAR(10 g) = 2.08 mW/g
Maximum value of SAR (measured) = 19.2 mW/g

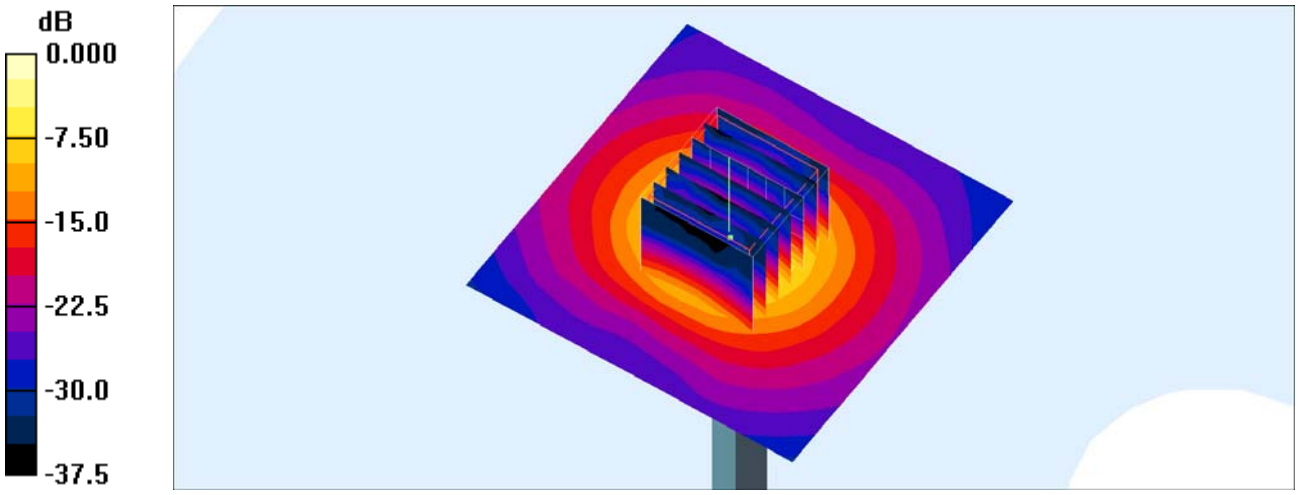

0 dB = 19.2mW/g

System Check_Head_5600MHz

DUT: D5GHzV2-1006

Communication System: CW; Frequency: 5600 MHz;Duty Cycle: 1:1
Medium: HSL_5G_161126 Medium parameters used: f = 5600 MHz; σ = 4.942 S/m; ε_r = 36.144; ρ = 1000 kg/m^3
Ambient Temperature：23.5 ℃； Liquid Temperature：22.5 ℃

DASY5 Configuration
- Probe: EX3DV4 - SN3898; ConvF(4.61, 4.61, 4.61); Calibrated: 2016/7/11;
- Sensor-Surface: 1.4mm (Mechanical Surface Detection)
- Electronics: DAE4 Sn913; Calibrated: 2016/3/31
- Phantom: SAM_RIGHT; Type: QD000P40CD; Serial: 1719
- Measurement SW: DASY52, Version 52.8 (8); SEMCAD X Version 14.6.10 (7373)

Pin=100mW/Area Scan (71x71x1): Interpolated grid: dx=1.000 mm, dy=1.000 mm
Maximum value of SAR (interpolated) = 18.9 W/kg

Pin=100mW/Zoom Scan (7x7x7)/Cube 0: Measurement grid: dx=4mm, dy=4mm, dz=1.4mm
Reference Value = 69.66 V/m; Power Drift = 0.11 dB
Peak SAR (extrapolated) = 32.7 W/kg
SAR(1 g) = 7.72 W/kg; SAR(10 g) = 2.17 W/kg
Maximum value of SAR (measured) = 19.9 W/kg

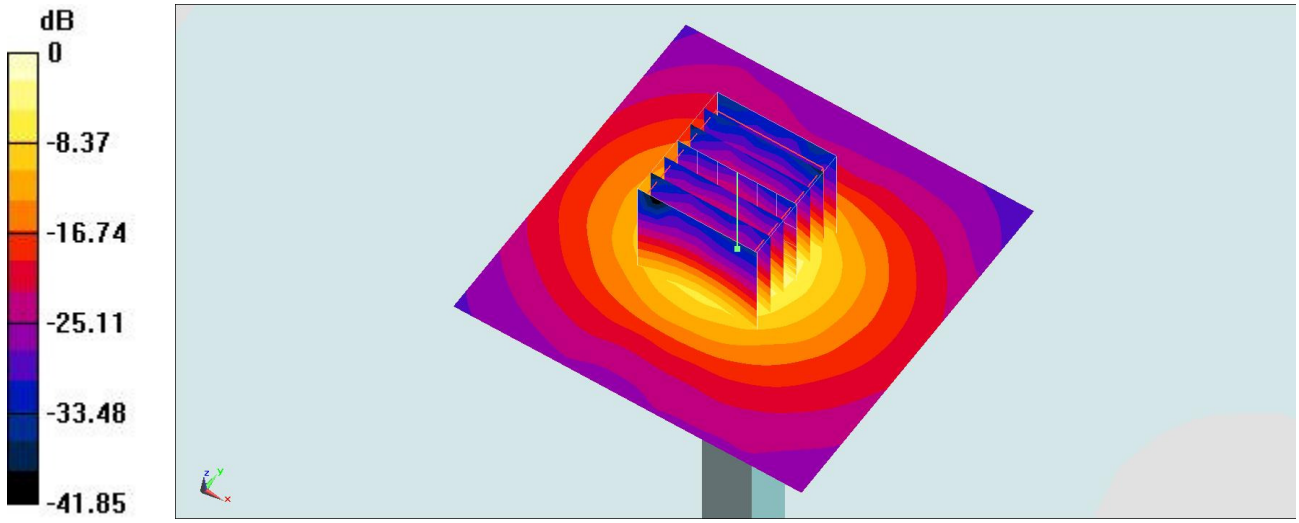

0 dB = 19.9 W/kg = 12.99 dBW/kg

System Check_Body_5600MHz

DUT: D5GHzV2-1040

Communication System: CW; Frequency: 5600 MHz;Duty Cycle: 1:1
Medium: MSL_5G_161129 Medium parameters used: f = 5600 MHz; σ = 5.91 mho/m; ε_r = 46.5; ρ = 1000 kg/m^3
Ambient Temperature：23.6 ℃; Liquid Temperature：22.6 ℃

DASY4 Configuration:
- Probe: EX3DV4 - SN3925; ConvF(3.85, 3.85, 3.85); Calibrated: 2016/5/26
- Sensor-Surface: 1.4mm (Mechanical Surface Detection)
- Electronics: DAE3 Sn495; Calibrated: 2016/5/27
- Phantom: SAM_Right; Type: QD000P40CD; Serial: TP:1383
- ;Postprocessing SW: SEMCAD, V1.8 Build 159

Pin=100mW/Area Scan (71x71x1): Measurement grid: dx=10mm, dy=10mm
Maximum value of SAR (interpolated) = 20.0 mW/g

Pin=100mW/Zoom Scan (7x7x7)/Cube 0: Measurement grid: dx=4mm, dy=4mm, dz=1.4mm
Reference Value = 65.8 V/m; Power Drift = 0.115 dB
Peak SAR (extrapolated) = 29.7 W/kg
SAR(1 g) = 7.41 mW/g; SAR(10 g) = 2.01 mW/g
Maximum value of SAR (measured) = 18.3 mW/g

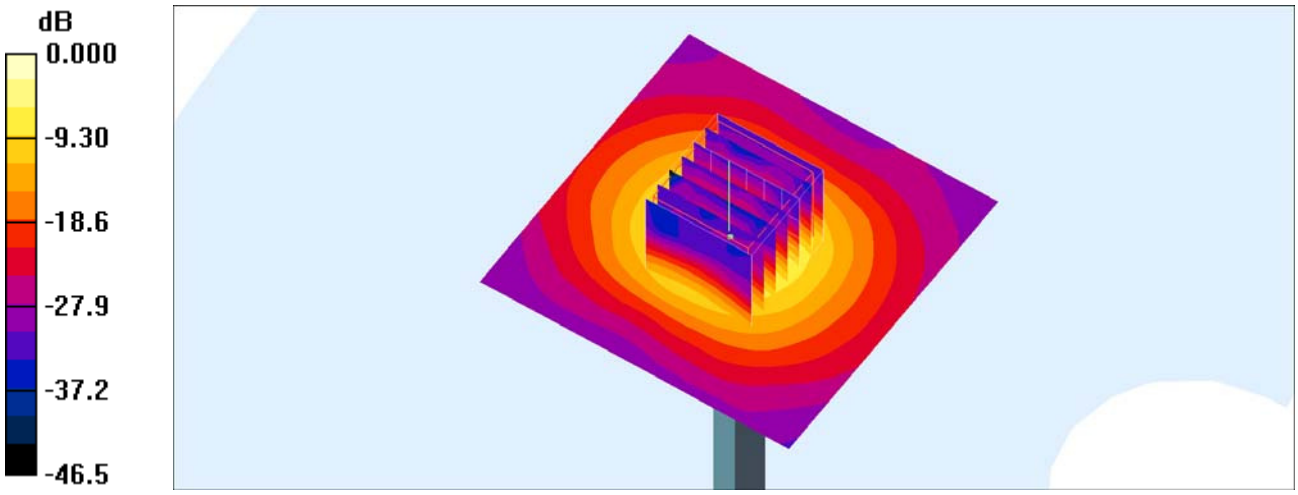

0 dB = 18.3mW/g

System Check_Head_5750MHz

DUT: D5GHzV2-1006

Communication System: CW; Frequency: 5750 MHz;Duty Cycle: 1:1
Medium: HSL_5G_161126 Medium parameters used: f = 5750 MHz; σ = 5.096 S/m; ε_r = 35.941; ρ = 1000 kg/m^3
Ambient Temperature：23.5 ℃； Liquid Temperature：22.5 ℃

DASY5 Configuration
- Probe: EX3DV4 - SN3898; ConvF(4.82, 4.82, 4.82); Calibrated: 2016/7/11;
- Sensor-Surface: 1.4mm (Mechanical Surface Detection)
- Electronics: DAE4 Sn913; Calibrated: 2016/3/31
- Phantom: SAM_RIGHT; Type: QD000P40CD; Serial: 1719
- Measurement SW: DASY52, Version 52.8 (8); SEMCAD X Version 14.6.10 (7373)

Pin=100mW/Area Scan (71x71x1): Interpolated grid: dx=1.000 mm, dy=1.000 mm
Maximum value of SAR (interpolated) = 19.6 W/kg

Pin=100mW/Zoom Scan (7x7x7)/Cube 0: Measurement grid: dx=4mm, dy=4mm, dz=1.4mm
Reference Value = 58.28 V/m; Power Drift = 0.09 dB
Peak SAR (extrapolated) = 33.4 W/kg
SAR(1 g) = 7.69 W/kg; SAR(10 g) = 2.06 W/kg
Maximum value of SAR (measured) = 19.6 W/kg

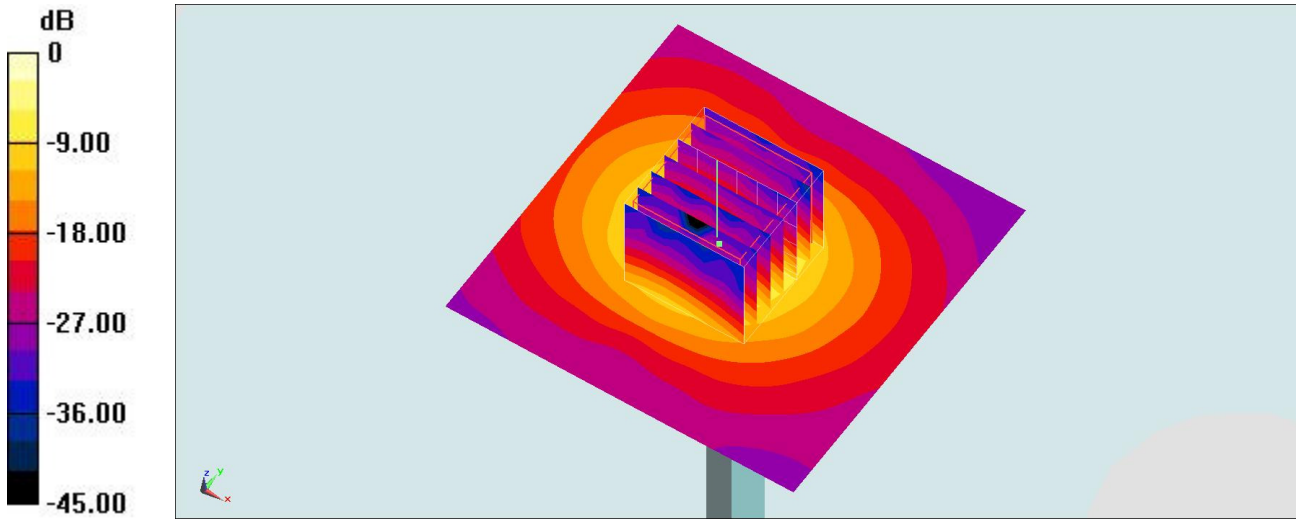

0 dB = 19.6 W/kg = 12.92 dBW/kg

Test Laboratory: Sporton International Inc. SAR/HAC Testing Lab Date: 2016/11/28

System Check_Body_5800MHz

DUT: D5GHzV2-1040

Communication System: CW; Frequency: 5800 MHz;Duty Cycle: 1:1
Medium: MSL_5G_161128 Medium parameters used: f = 5800 MHz; σ = 6.26 mho/m; ε_r = 46; ρ = 1000 kg/m^3
Ambient Temperature：23.5 ℃; Liquid Temperature：22.5 ℃

DASY4 Configuration:
- Probe: EX3DV4 - SN3925; ConvF(3.85, 3.85, 3.85); Calibrated: 2016/5/26
- Sensor-Surface: 1.4mm (Mechanical Surface Detection)
- Electronics: DAE3 Sn495; Calibrated: 2016/5/27
- Phantom: SAM_Right; Type: QD000P40CD; Serial: TP:1383
- ;Postprocessing SW: SEMCAD, V1.8 Build 159

Pin=100mW/Area Scan (71x71x1): Measurement grid: dx=10mm, dy=10mm
Maximum value of SAR (interpolated) = 19.9 mW/g

Pin=100mW/Zoom Scan (7x7x7)/Cube 0: Measurement grid: dx=4mm, dy=4mm, dz=1.4mm
Reference Value = 52.5 V/m; Power Drift = 0.000 dB
Peak SAR (extrapolated) = 32.4 W/kg
SAR(1 g) = 7.54 mW/g; SAR(10 g) = 2.02 mW/g
Maximum value of SAR (measured) = 19.6 mW/g

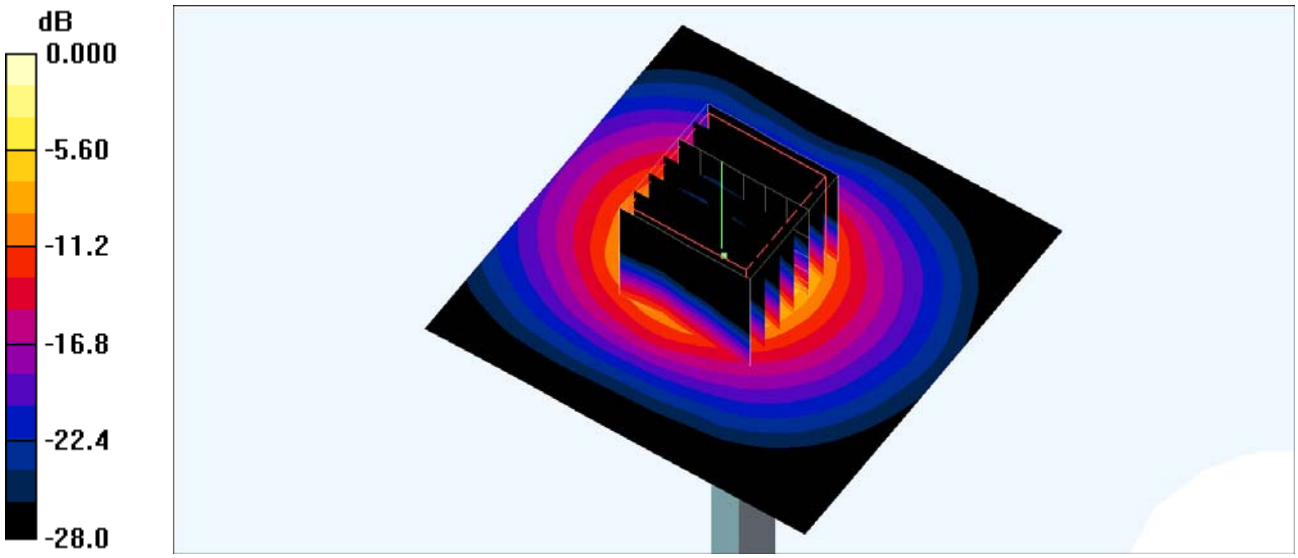

0 dB = 19.6mW/g