Test Laboratory: Sporton International Inc. SAR/HAC Testing Lab Date: 2018/8/1

System Check_Head_750MHz

DUT: D750V3-1107

Communication System: CW ; Frequency: 750 MHz;Duty Cycle: 1:1
Medium: HSL_750_180801 Medium parameters used: f = 750 MHz; σ = 0.894 S/m; ε_r = 40.627; ρ = 1000 kg/m^3
Ambient Temperature：23.3 ℃; Liquid Temperature：22.3 ℃

DASY5 Configuration:
- Probe: EX3DV4 - SN3976; ConvF(10.74, 10.74, 10.74); Calibrated: 2018/1/23
- Sensor-Surface: 1.4mm (Mechanical Surface Detection)
- Electronics: DAE4 Sn1424; Calibrated: 2018/1/18
- Phantom: SAM-Right; Type: SAM; Serial: TP-1503
- Measurement SW: DASY52, Version 52.10 (1);SEMCAD X Version 14.6.11 (7439)

Pin=250mW/Area Scan (61x61x1): Interpolated grid: dx=1.500 mm, dy=1.500 mm
Maximum value of SAR (interpolated) = 2.81 W/kg

Pin=250mW/Zoom Scan (5x5x7)/Cube 0: Measurement grid: dx=8mm, dy=8mm, dz=5mm
Reference Value = 56.53 V/m; Power Drift = -0.03 dB
Peak SAR (extrapolated) = 3.02 W/kg
SAR(1 g) = 2.05 W/kg; SAR(10 g) = 1.38 W/kg
Maximum value of SAR (measured) = 2.70 W/kg

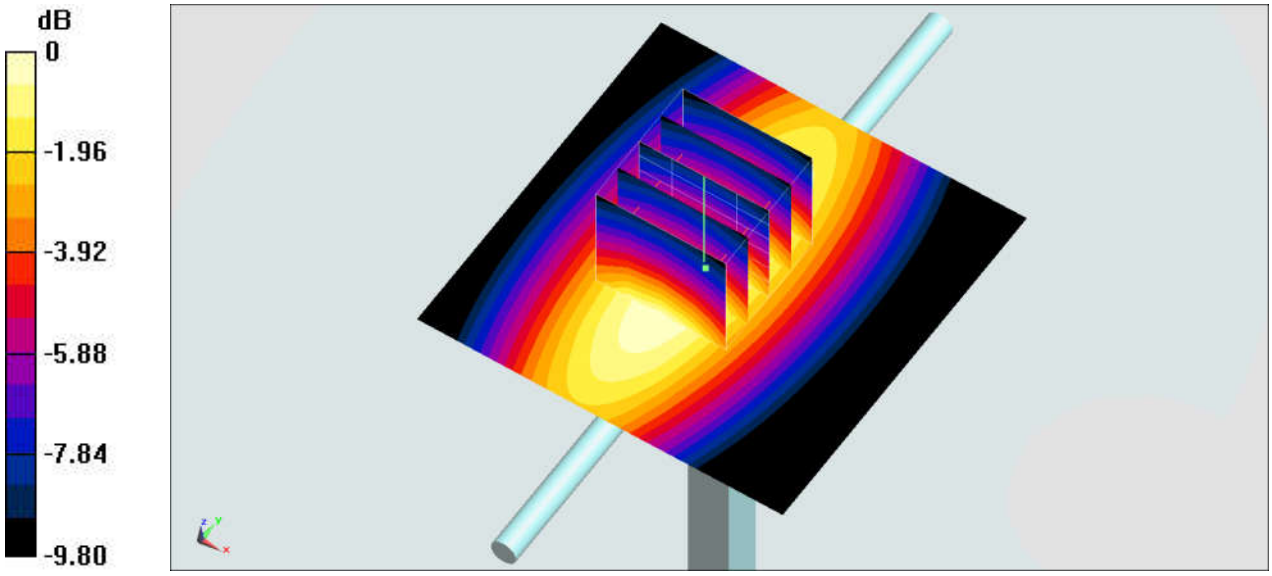

0 dB = 2.70 W/kg = 4.31 dBW/kg

Test Laboratory: Sporton International Inc. SAR/HAC Testing Lab Date: 2018/7/31

System Check_Head_835MHz

DUT: D835V2-4d167

Communication System: CW ; Frequency: 835 MHz;Duty Cycle: 1:1
Medium: HSL_850_180731 Medium parameters used: f = 835 MHz; σ = 0.88 S/m; ε_r = 42.777; ρ = 1000 kg/m^3
Ambient Temperature：23.4 ℃; Liquid Temperature：22.4 ℃

DASY5 Configuration:
- Probe: EX3DV4 - SN3976; ConvF(10.19, 10.19, 10.19); Calibrated: 2018/1/23
- Sensor-Surface: 1.4mm (Mechanical Surface Detection)
- Electronics: DAE4 Sn1424; Calibrated: 2018/1/18
- Phantom: SAM-Right; Type: SAM; Serial: TP-1503
- Measurement SW: DASY52, Version 52.10 (1);SEMCAD X Version 14.6.11 (7439)

Pin=250mW/Area Scan (61x61x1): Interpolated grid: dx=1.500 mm, dy=1.500 mm
Maximum value of SAR (interpolated) = 3.04 W/kg

Pin=250mW/Zoom Scan (5x5x7)/Cube 0: Measurement grid: dx=8mm, dy=8mm, dz=5mm
Reference Value = 59.93 V/m; Power Drift = 0.02 dB
Peak SAR (extrapolated) = 3.49 W/kg
SAR(1 g) = 2.31 W/kg; SAR(10 g) = 1.53 W/kg
Maximum value of SAR (measured) = 3.06 W/kg

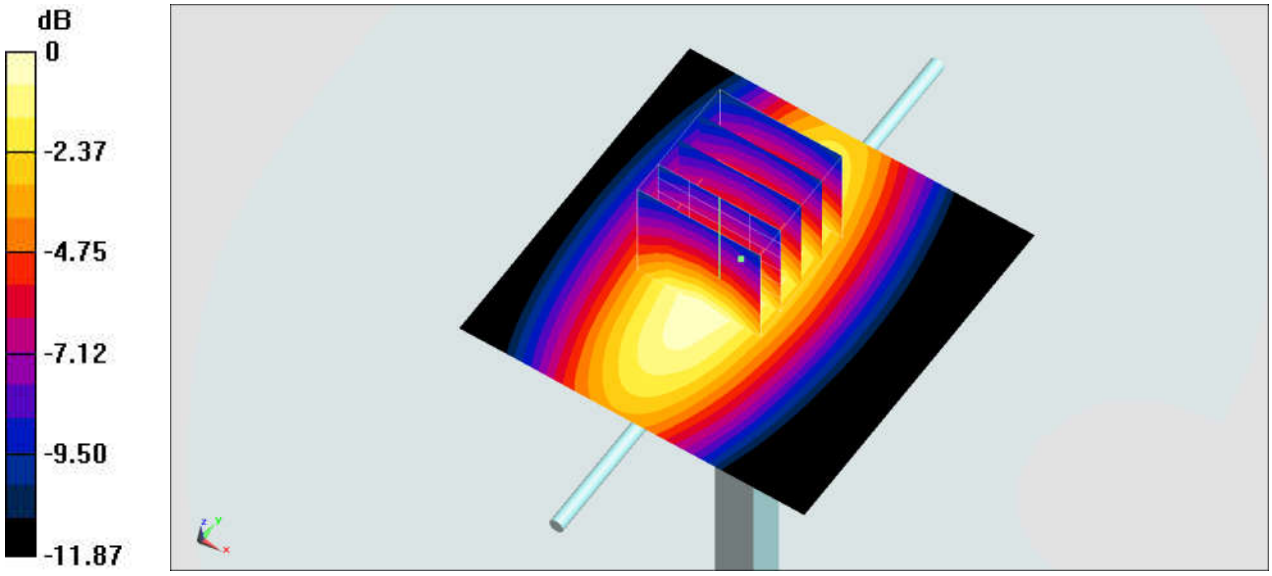

0 dB = 3.06 W/kg = 4.86 dBW/kg

Test Laboratory: Sporton International Inc. SAR/HAC Testing Lab Date: 2018/7/30

System Check_Head_1750MHz

DUT: D1750V2-1068

Communication System: CW ; Frequency: 1750 MHz;Duty Cycle: 1:1
Medium: HSL_1750_180730 Medium parameters used: f = 1750 MHz; σ = 1.389 S/m; ε_r = 40.516; ρ = 1000 kg/m^3
Ambient Temperature：23.2 ℃; Liquid Temperature：22.2 ℃

DASY5 Configuration:
- Probe: EX3DV4 - SN3976; ConvF(8.99, 8.99, 8.99); Calibrated: 2018/1/23
- Sensor-Surface: 1.4mm (Mechanical Surface Detection)
- Electronics: DAE4 Sn1424; Calibrated: 2018/1/18
- Phantom: SAM_Left; Type: QD000P40CD; Serial: TP:1431
- Measurement SW: DASY52, Version 52.10 (1);SEMCAD X Version 14.6.11 (7439)

Pin=250mW/Area Scan (61x61x1): Interpolated grid: dx=1.500 mm, dy=1.500 mm
Maximum value of SAR (interpolated) = 12.0 W/kg

Pin=250mW/Zoom Scan (5x5x7)/Cube 0: Measurement grid: dx=8mm, dy=8mm, dz=5mm
Reference Value = 92.92 V/m; Power Drift = 0.13 dB
Peak SAR (extrapolated) = 15.1 W/kg
SAR(1 g) = 8.63 W/kg; SAR(10 g) = 4.65 W/kg
Maximum value of SAR (measured) = 12.0 W/kg

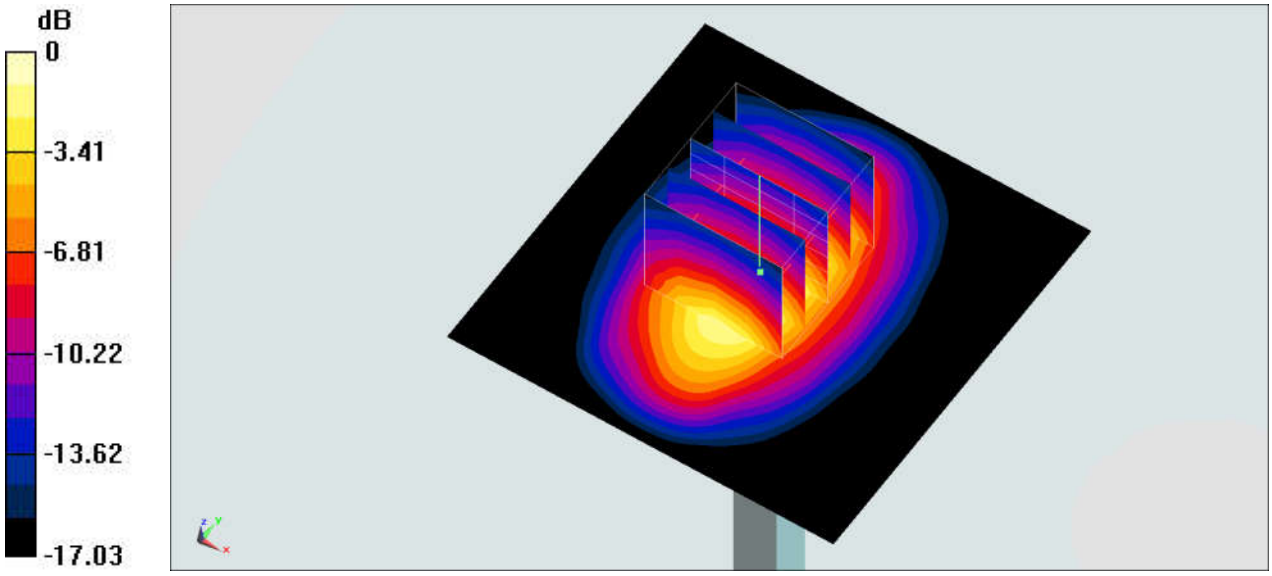

0 dB = 12.0 W/kg = 10.79 dBW/kg

Test Laboratory: Sporton International Inc. SAR/HAC Testing Lab Date: 2018/7/30

System Check_Head_1900MHz

DUT: D1900V2-5d041

Communication System: CW; Frequency: 1900 MHz;Duty Cycle: 1:1
Medium: HSL_1900_180730 Medium parameters used: f = 1900 MHz; σ = 1.391 S/m; ε_r = 40.049; ρ = 1000 kg/m^3
Ambient Temperature：23.5 ℃; Liquid Temperature：22.5 ℃

DASY5 Configuration:
- Probe: EX3DV4 - SN3976; ConvF(8.71, 8.71, 8.71) ; Calibrated: 2018/1/23
- Sensor-Surface: 1.4mm (Mechanical Surface Detection)
- Electronics: DAE4 Sn1424; Calibrated: 2018/1/18
- Phantom: SAM_Left; Type: QD000P40CD; Serial: TP:1431
- Measurement SW: DASY52, Version 52.10 (1);SEMCAD X Version 14.6.11 (7439)

Pin=250mW/Area Scan (61x61x1): Interpolated grid: dx=1.500 mm, dy=1.500 mm
Maximum value of SAR (interpolated) = 15.1 W/kg

Pin=250mW/Zoom Scan (5x5x7)/Cube 0: Measurement grid: dx=8mm, dy=8mm, dz=5mm
Reference Value = 105.3 V/m; Power Drift = -0.08 dB
Peak SAR (extrapolated) = 17.5 W/kg
SAR(1 g) = 9.52 W/kg; SAR(10 g) = 4.99 W/kg
Maximum value of SAR (measured) = 14.5 W/kg

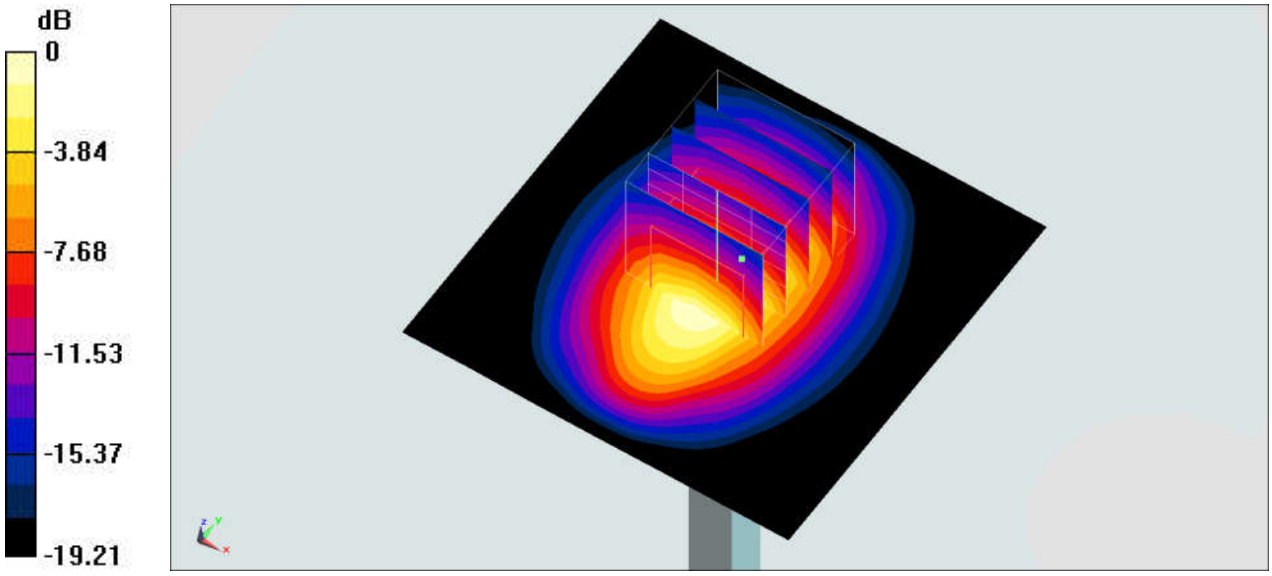

0 dB = 14.5 W/kg = 11.61 dBW/kg

System Check_Head_2450MHz

DUT: D2450V2-736

Communication System: CW; Frequency: 2450 MHz;Duty Cycle: 1:1
Medium: HSL_2450_180811 Medium parameters used : f = 2450 MHz; σ = 1.821 S/m; ε_r = 40.46; ρ = 1000 kg/m^3
Ambient Temperature：23.4 ℃; Liquid Temperature：22.4 ℃

DASY5 Configuration
- Probe: EX3DV4 - SN7306;ConvF(7.43, 7.43, 7.43);Calibrated: 2018/7/26
- Sensor-Surface: 1.4mm (Mechanical Surface Detection)
- Electronics: DAE4 Sn853; Calibrated: 2018/7/24
- Phantom: SAM_Right; Type: QD000P40CD; Serial: S/N:1796
- Measurement SW: DASY52, Version 52.10 (1); SEMCAD X Version 14.6.11 (7439)

Pin=250mW/Area Scan (81x81x1): Interpolated grid: dx=1.200 mm, dy=1.200 mm
Maximum value of SAR (interpolated) = 21.8 W/kg

Pin=250mW/Zoom Scan (7x7x7)/Cube 0: Measurement grid: dx=5mm, dy=5mm, dz=5mm
Reference Value = 113.9 V/m; Power Drift = -0.03 dB
Peak SAR (extrapolated) = 26.7 W/kg
SAR(1 g) = 12.9 W/kg; SAR(10 g) = 5.93 W/kg
Maximum value of SAR (measured) = 21.5 W/kg

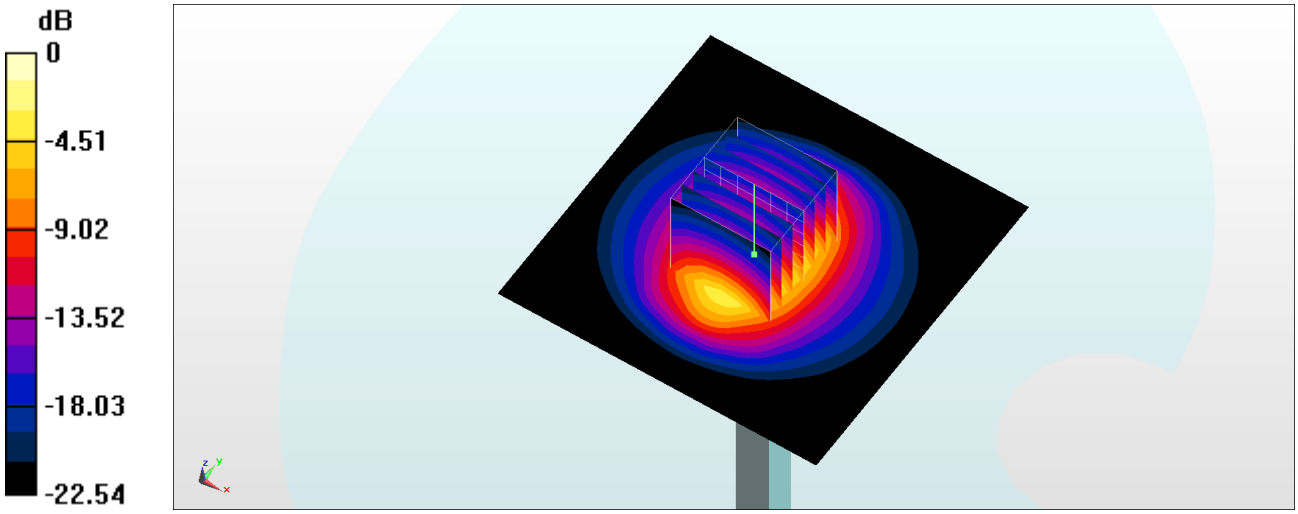

0 dB = 21.5 W/kg = 13.32 dBW/kg

Test Laboratory: Sporton International Inc. SAR/HAC Testing Lab Date: 2018/7/27

System Check_Head_2600MHz

DUT: D2600V2-1008

Communication System: CW ; Frequency: 2600 MHz;Duty Cycle: 1:1
Medium: HSL_2600_180727 Medium parameters used: f = 2600 MHz; σ = 1.951 S/m; ε_r = 39.497; ρ = 1000 kg/m^3
Ambient Temperature：23.1 ℃; Liquid Temperature：22.1 ℃

DASY5 Configuration:
- Probe: EX3DV4 - SN3976; ConvF(7.54, 7.54, 7.54); Calibrated: 2018/1/23
- Sensor-Surface: 1.4mm (Mechanical Surface Detection)
- Electronics: DAE4 Sn1424; Calibrated: 2018/1/18
- Phantom: SAM_Left; Type: QD000P40CD; Serial: TP:1431
- Measurement SW: DASY52, Version 52.10 (1);SEMCAD X Version 14.6.11 (7439)

Pin=250mW/Area Scan (61x61x1): Interpolated grid: dx=1.200 mm, dy=1.200 mm
Maximum value of SAR (interpolated) = 25.3 W/kg

Pin=250mW/Zoom Scan (7x7x7)/Cube 0: Measurement grid: dx=5mm, dy=5mm, dz=5mm
Reference Value = 117.5 V/m; Power Drift = -0.03 dB
Peak SAR (extrapolated) = 31.4 W/kg
SAR(1 g) = 14.6 W/kg; SAR(10 g) = 6.51 W/kg
Maximum value of SAR (measured) = 24.6 W/kg

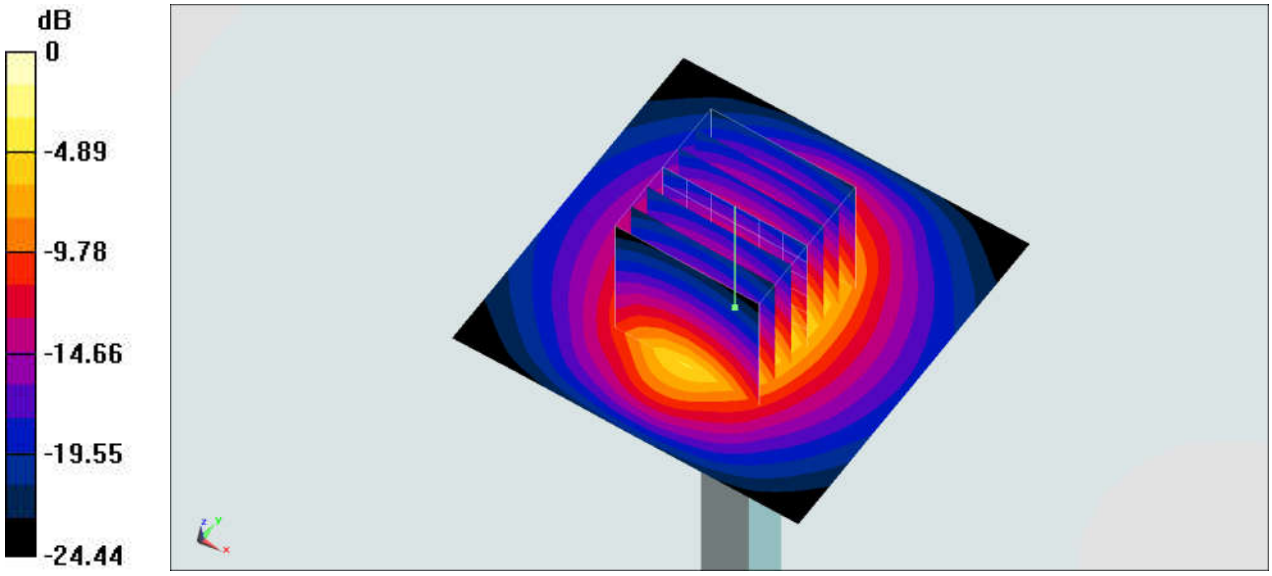

0 dB = 24.6 W/kg = 13.91 dBW/kg

Test Laboratory: Sporton International Inc. SAR/HAC Testing Lab Date: 2018/7/27

System Check_Head_2600MHz

DUT: D2600V2-1008

Communication System: CW; Frequency: 2600 MHz;Duty Cycle: 1:1
Medium: HSL_2600_180727 Medium parameters used: f = 2600 MHz; σ = 1.951 S/m; ε_r = 39.497; ρ = 1000 kg/m^3
Ambient Temperature：23.1 ℃; Liquid Temperature：22.1 ℃

DASY5 Configuration:
- Probe: ES3DV3 - SN3270; ConvF(4.45, 4.45, 4.45); Calibrated: 2017/9/25
- Sensor-Surface: 3mm (Mechanical Surface Detection)
- Electronics: DAE4 Sn778; Calibrated: 2018/5/25
- Phantom: SAM_Left; Type: QD000P40CD; Serial: TP:1431
- Measurement SW: DASY52, Version 52.10 (1);SEMCAD X Version 14.6.11 (7439)

Pin=250mW/Area Scan (81x81x1): Interpolated grid: dx=1.200 mm, dy=1.200 mm
Maximum value of SAR (interpolated) = 22.2 W/kg

Pin=250mW/Zoom Scan (7x7x7)/Cube 0: Measurement grid: dx=5mm, dy=5mm, dz=5mm
Reference Value = 115.5 V/m; Power Drift = -0.08 dB
Peak SAR (extrapolated) = 30.9 W/kg
SAR(1 g) = 14.3 W/kg; SAR(10 g) = 6.32 W/kg
Maximum value of SAR (measured) = 22.1 W/kg

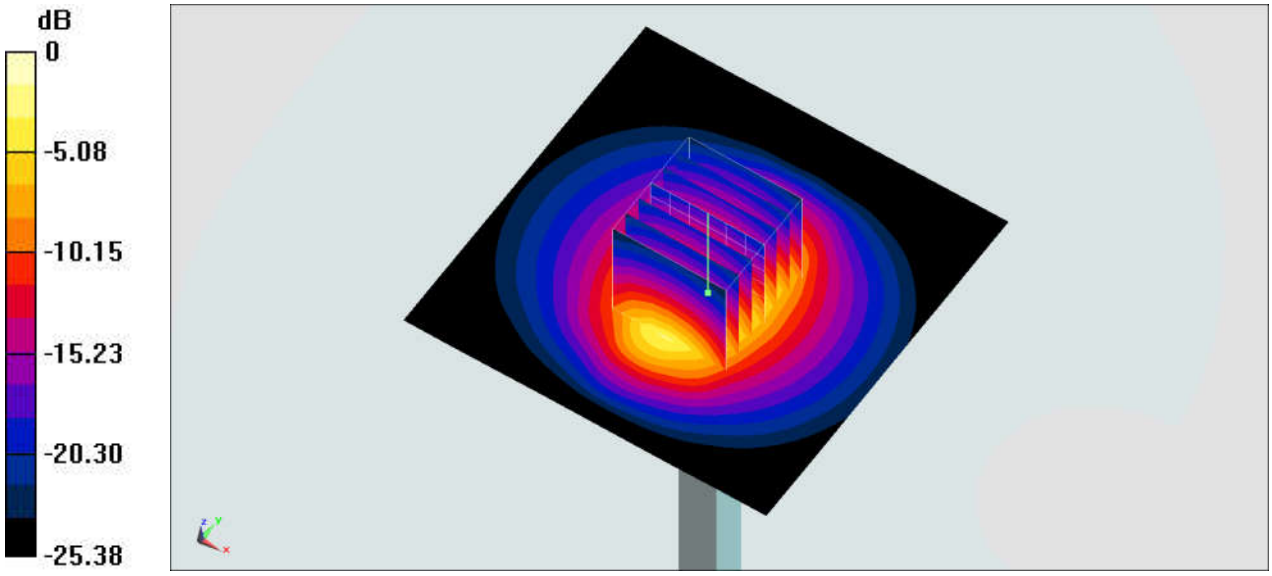

0 dB = 22.1 W/kg = 13.44 dBW/kg

System Check_Head_5250MHz

DUT: D5GHzV2-1006

Communication System: CW; Frequency: 5250 MHz;Duty Cycle: 1:1
Medium: HSL_5G_180809 Medium parameters used : f = 5250 MHz; σ = 4.591 S/m; ε_r =36.703; ρ = 1000 kg/m^3
Ambient Temperature：23.7 ℃; Liquid Temperature：22.7 ℃

DASY5 Configuration:
- Probe: EX3DV4 - SN3925; ConvF(5.08, 5.08, 5.08); Calibrated: 2018/5/31
- Sensor-Surface: 1.4mm (Mechanical Surface Detection)
- Electronics: DAE3 Sn495; Calibrated: 2018/5/24
- Phantom: SAM_Left; Type: QD000P40CD; Serial: TP:1815
- Measurement SW: DASY52, Version 52.10 (1);SEMCAD X Version 14.6.11 (7439)

Pin=100mW/Area Scan (71x71x1): Interpolated grid: dx=1.000 mm, dy=1.000 mm
Maximum value of SAR (interpolated) = 19.9 W/kg

Pin=100mW/Zoom Scan (7x7x7)/Cube 0: Measurement grid: dx=4mm, dy=4mm, dz=1.4mm
Reference Value = 67.69 V/m; Power Drift = -0.09 dB
Peak SAR (extrapolated) = 34.8 W/kg
SAR(1 g) = 8.1 W/kg; SAR(10 g) = 2.28 W/kg
Maximum value of SAR (measured) = 20.8 W/kg

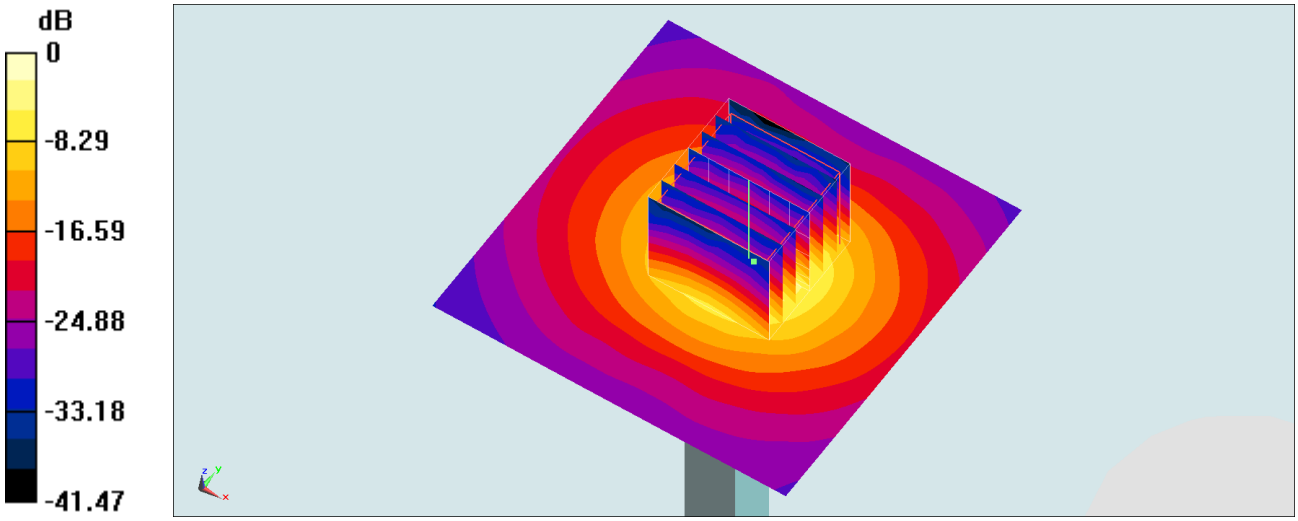

0 dB = 20.8 W/kg = 13.18 dBW/kg

System Check_Head_5600MHz

DUT: D5GHzV2-1006

Communication System: CW; Frequency: 5600 MHz;Duty Cycle: 1:1
Medium: HSL_5G_180809 Medium parameters used: f = 5600 MHz; σ = 4.935 S/m; ε_r = 36.261; ρ = 1000 kg/m^3
Ambient Temperature：23.7 ℃; Liquid Temperature：22.7 ℃

DASY5 Configuration:
- Probe: EX3DV4 - SN3925; ConvF(4.64, 4.64, 4.64); Calibrated: 2018/5/31
- Sensor-Surface: 1.4mm (Mechanical Surface Detection)
- Electronics: DAE3 Sn495; Calibrated: 2018/5/24
- Phantom: SAM_Left; Type: QD000P40CD; Serial: TP:1815
- Measurement SW: DASY52, Version 52.10 (1);SEMCAD X Version 14.6.11 (7439)

Pin=100mW/Area Scan (71x71x1): Interpolated grid: dx=1.000 mm, dy=1.000 mm
Maximum value of SAR (interpolated) = 21.1 W/kg

Pin=100mW/Zoom Scan (7x7x7)/Cube 0: Measurement grid: dx=4mm, dy=4mm, dz=1.4mm
Reference Value = 67.89 V/m; Power Drift = -0.08 dB
Peak SAR (extrapolated) = 38.5 W/kg
SAR(1 g) = 8.28 W/kg; SAR(10 g) = 2.32 W/kg
Maximum value of SAR (measured) = 21.8 W/kg

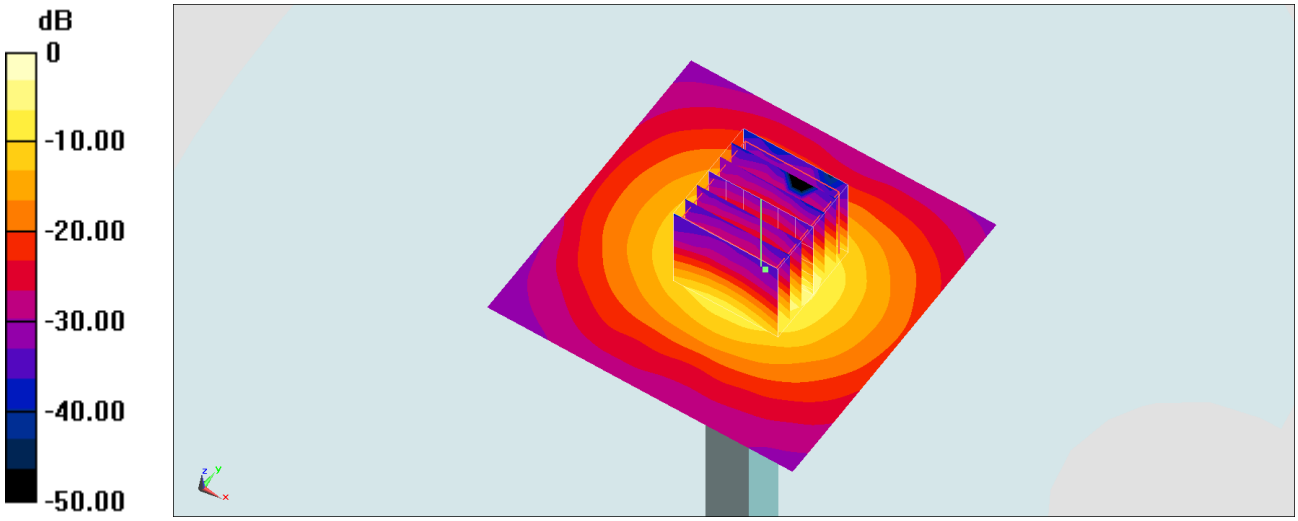

0 dB = 21.8 W/kg = 13.38 dBW/kg

System Check_Head_5750MHz

DUT: D5GHzV2-1006

Communication System: CW; Frequency: 5750 MHz;Duty Cycle: 1:1
Medium: HSL_5G_180809 Medium parameters used: f = 5750 MHz; σ = 5.096 S/m; ε_r = 36.06; ρ = 1000 kg/m^3
Ambient Temperature：23.7 ℃; Liquid Temperature：22.7 ℃

DASY5 Configuration:
- Probe: EX3DV4 - SN3925; ConvF(4.89, 4.89, 4.89); Calibrated: 2018/5/31
- Sensor-Surface: 1.4mm (Mechanical Surface Detection)
- Electronics: DAE3 Sn495; Calibrated: 2018/5/24
- Phantom: SAM_Left; Type: QD000P40CD; Serial: TP:1815
- Measurement SW: DASY52, Version 52.10 (1);SEMCAD X Version 14.6.11 (7439)

Pin=100mW/Area Scan (71x71x1): Interpolated grid: dx=1.000 mm, dy=1.000 mm
Maximum value of SAR (interpolated) = 20.1 W/kg

Pin=100mW/Zoom Scan (7x7x7)/Cube 0: Measurement grid: dx=4mm, dy=4mm, dz=1.4mm
Reference Value = 65.52 V/m; Power Drift = -0.02 dB
Peak SAR (extrapolated) = 36.8 W/kg
SAR(1 g) = 7.73 W/kg; SAR(10 g) = 2.16 W/kg
Maximum value of SAR (measured) = 20.2 W/kg

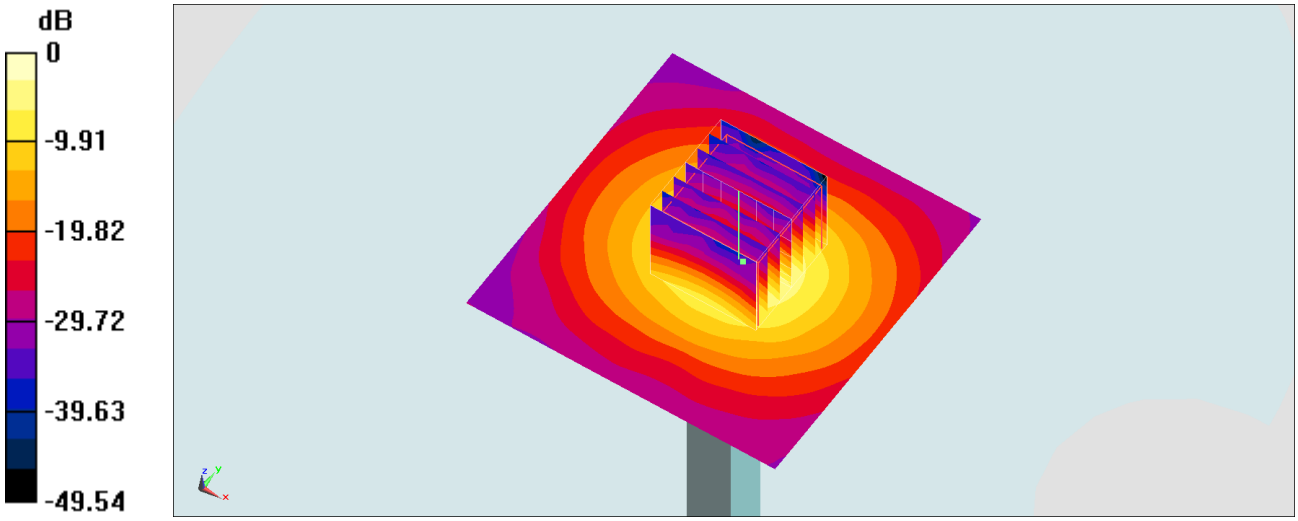

0 dB = 20.2 W/kg = 13.05 dBW/kg

System Check_Head_5750MHz

DUT: D5GHzV2-1006

Communication System: CW ; Frequency: 5750 MHz;Duty Cycle: 1:1
Medium: HSL_5G_180826 Medium parameters used: f = 5750 MHz; σ = 5.046 S/m; ε_r = 36.59; ρ = 1000 kg/m^3
Ambient Temperature：23.5 ℃; Liquid Temperature：22.5 ℃

DASY5 Configuration
- Probe: EX3DV4 - SN3931;ConvF(4.95, 4.95, 4.95);Calibrated: 2017/9/29
- Sensor-Surface: 1.4mm (Mechanical Surface Detection)
- Electronics: DAE4 Sn1399; Calibrated: 2017/11/16
- Phantom: SAM-Left; Type: QD 000 P40 C; Serial: TP-1446
- Measurement SW: DASY52, Version 52.10 (1); SEMCAD X Version 14.6.11 (7439)

Pin=100mW/Area Scan (71x71x1): Interpolated grid: dx=1.000 mm, dy=1.000 mm
Maximum value of SAR (interpolated) = 19.6 W/kg

Pin=100mW/Zoom Scan (7x7x7)/Cube 0: Measurement grid: dx=4mm, dy=4mm, dz=1.4mm
Reference Value = 67.55 V/m; Power Drift = 0.15 dB
Peak SAR (extrapolated) = 32.9 W/kg
SAR(1 g) = 7.65 W/kg; SAR(10 g) = 2.1 W/kg
Maximum value of SAR (measured) = 19.3 W/kg

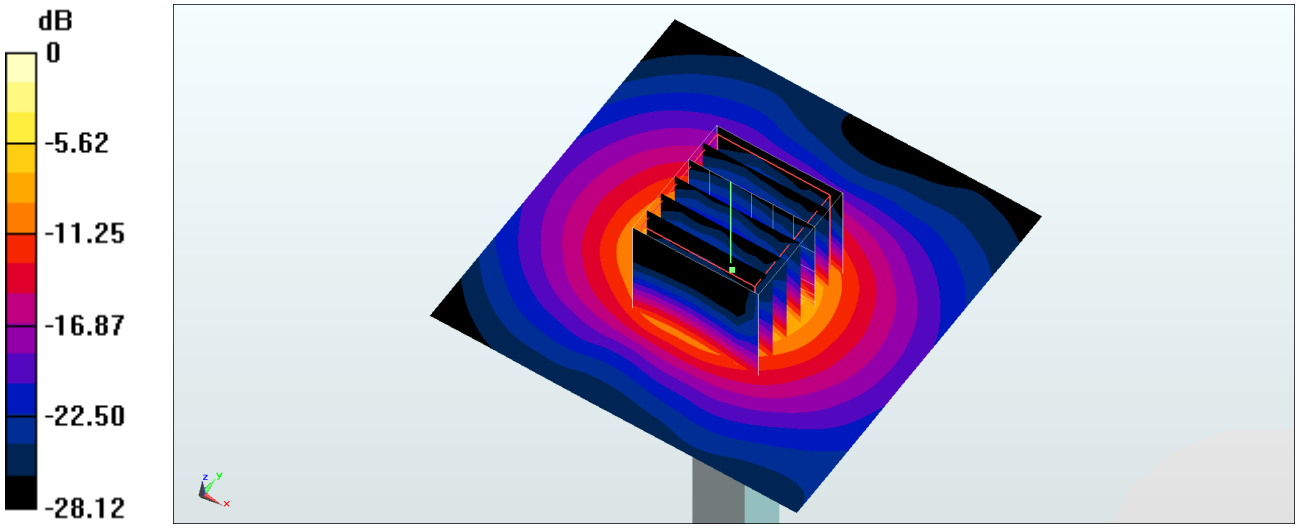

0 dB = 19.3 W/kg = 12.86 dBW/kg

System Check_Body_750MHz

DUT: D750V3-1107

Communication System: CW ; Frequency: 750 MHz;Duty Cycle: 1:1
Medium: MSL_750_180805 Medium parameters used: f = 750 MHz; σ = 0.973 S/m; ε_r = 54.283; ρ = 1000 kg/m^3
Ambient Temperature：23.3 ℃; Liquid Temperature：22.3 ℃

DASY5 Configuration
- Probe: EX3DV4 - SN3976;ConvF(10.37, 10.37, 10.37);Calibrated: 2018/1/23
- Sensor-Surface: 1.4mm (Mechanical Surface Detection)
- Electronics: DAE4 Sn1424; Calibrated: 2018/1/18
- Phantom: SAM_Right; Type: QD000P40CD; Serial: S/N:1796
- Measurement SW: DASY52, Version 52.10 (1); SEMCAD X Version 14.6.11 (7439)

Pin=250mW/Area Scan (61x61x1): Interpolated grid: dx=1.500 mm, dy=1.500 mm
Maximum value of SAR (interpolated) = 3.00 W/kg

Pin=250mW/Zoom Scan (5x5x7)/Cube 0: Measurement grid: dx=8mm, dy=8mm, dz=5mm
Reference Value = 57.80 V/m; Power Drift = -0.00 dB
Peak SAR (extrapolated) = 3.43 W/kg
SAR(1 g) = 2.26 W/kg; SAR(10 g) = 1.47 W/kg
Maximum value of SAR (measured) = 3.03 W/kg

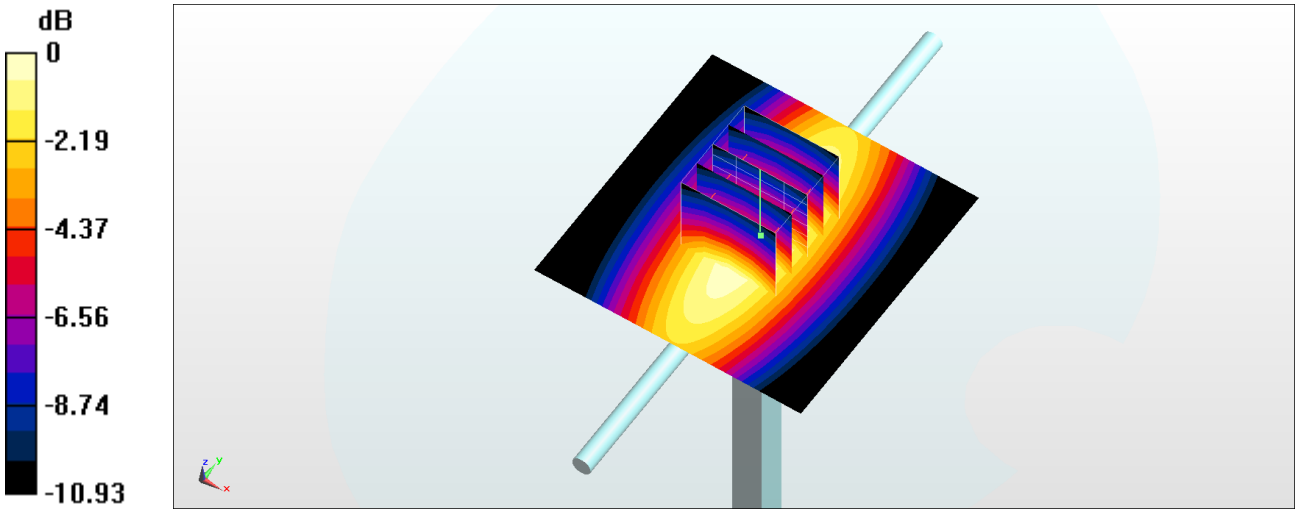

0 dB = 3.03 W/kg = 4.81 dBW/kg

System Check_Body_750MHz

DUT: D750V3-1107

Communication System: CW; Frequency: 750 MHz;Duty Cycle: 1:1
Medium: MSL_750_180806 Medium parameters used: f = 750 MHz; σ = 0.965 S/m; ε_r = 54.383; ρ = 1000 kg/m^3
Ambient Temperature：23.4 ℃; Liquid Temperature：22.4 ℃

DASY5 Configuration
- Probe: ES3DV3 - SN3169;ConvF(6.3, 6.3, 6.3);Calibrated: 2018/5/28
- Sensor-Surface: 3mm (Mechanical Surface Detection)
- Electronics: DAE4 Sn854; Calibrated: 2018/6/14
- Phantom: SAM_Right; Type: QD000P40CD; Serial: S/N:1796
- Measurement SW: DASY52, Version 52.10 (1); SEMCAD X Version 14.6.11 (7439)

Pin=250mW/Area Scan (61x61x1): Interpolated grid: dx=1.500 mm, dy=1.500 mm
Maximum value of SAR (interpolated) = 2.61 W/kg

Pin=250mW/Zoom Scan (5x5x7)/Cube 0: Measurement grid: dx=8mm, dy=8mm, dz=5mm
Reference Value = 51.06 V/m; Power Drift = 0.00 dB
Peak SAR (extrapolated) = 3.14 W/kg
SAR(1 g) = 2.21 W/kg; SAR(10 g) = 1.5 W/kg
Maximum value of SAR (measured) = 2.55 W/kg

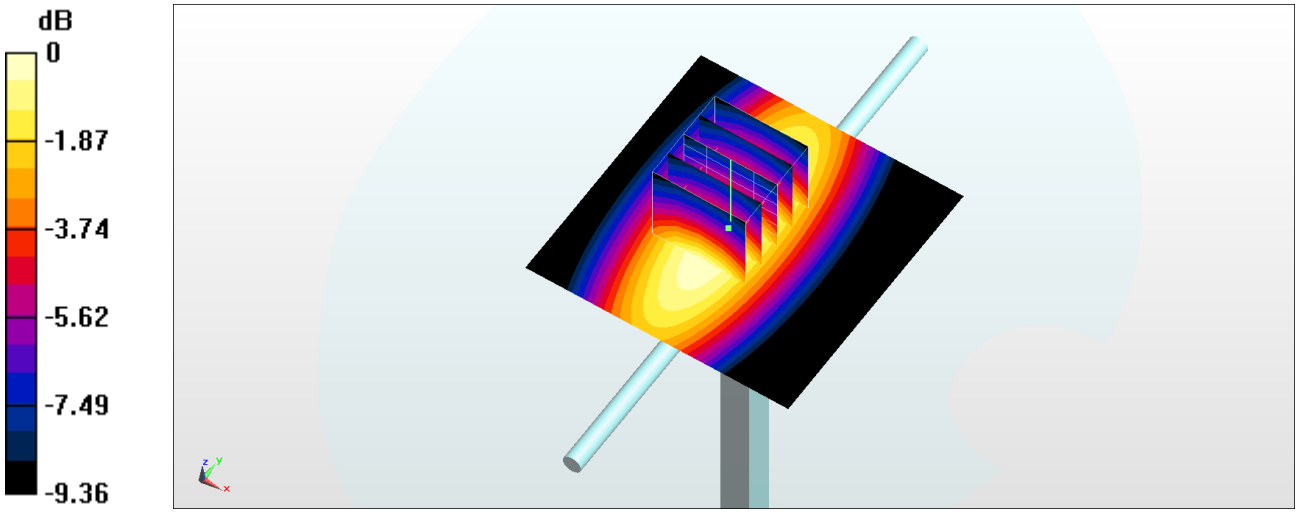

0 dB = 2.55 W/kg = 4.07 dBW/kg

Test Laboratory: Sporton International Inc. SAR/HAC Testing Lab Date: 2018/8/4

System Check_Body_835MHz

DUT: D835V2-4d167

Communication System: CW; Frequency: 835 MHz;Duty Cycle: 1:1
Medium: MSL_850_180804 Medium parameters used: f = 835 MHz; σ = 1.004 S/m; ε_r = 56.128; ρ = 1000 kg/m^3
Ambient Temperature：23.3 ℃; Liquid Temperature：22.3 ℃

DASY5 Configuration:
- Probe: ES3DV3 - SN3270; ConvF(6.09, 6.09, 6.09); Calibrated: 2017/9/25
- Sensor-Surface: 3mm (Mechanical Surface Detection)
- Electronics: DAE4 Sn778; Calibrated: 2018/5/25
- Phantom: SAM_Left; Type: QD000P40CD; Serial: TP:1431
- Measurement SW: DASY52, Version 52.10 (1);SEMCAD X Version 14.6.11 (7439)

Pin=250mW/Area Scan (61x61x1): Interpolated grid: dx=1.500 mm, dy=1.500 mm
Maximum value of SAR (interpolated) = 3.00 W/kg

Pin=250mW/Zoom Scan (5x5x7)/Cube 0: Measurement grid: dx=8mm, dy=8mm, dz=5mm
Reference Value = 55.35 V/m; Power Drift = 0.01 dB
Peak SAR (extrapolated) = 3.69 W/kg
SAR(1 g) = 2.59 W/kg; SAR(10 g) = 1.66 W/kg
Maximum value of SAR (measured) = 2.99 W/kg

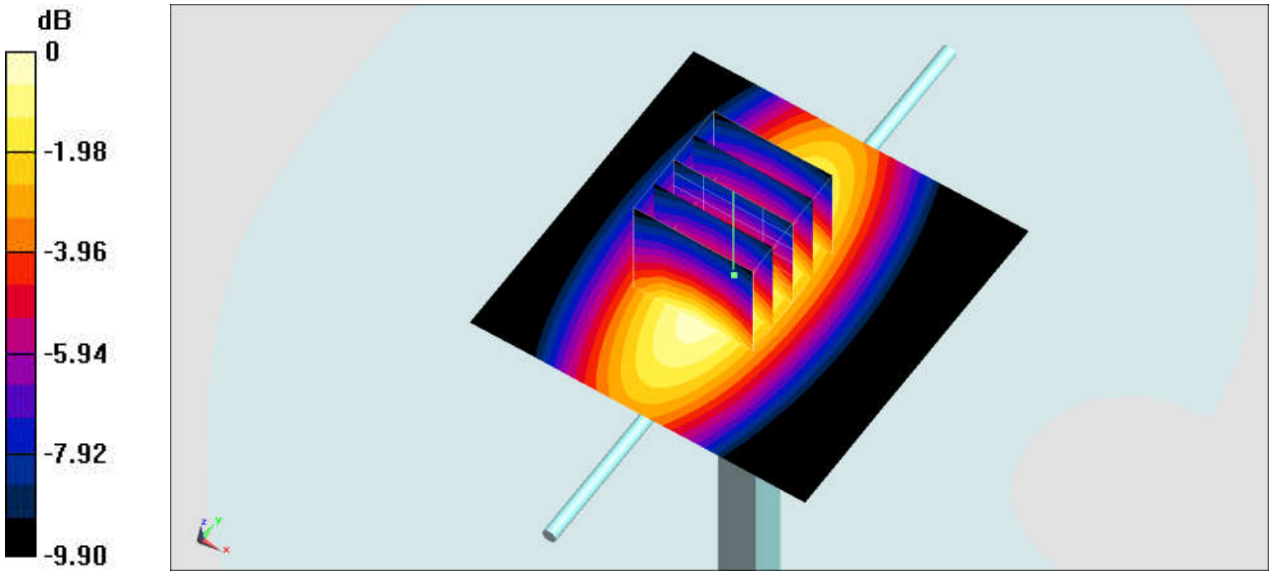

0 dB = 2.99 W/kg = 4.76 dBW/kg

System Check_Body_835MHz

DUT: D835V2-4d167

Communication System: CW; Frequency: 835 MHz;Duty Cycle: 1:1
Medium: MSL_850_180806 Medium parameters used: f = 835 MHz; σ = 0.985 S/m; ε_r = 57.211; ρ = 1000 kg/m^3
Ambient Temperature：23.6 ℃; Liquid Temperature：22.6 ℃

DASY5 Configuration
- Probe: ES3DV3 - SN3169;ConvF(6.19, 6.19, 6.19);Calibrated: 2018/5/28
- Sensor-Surface: 3mm (Mechanical Surface Detection)
- Electronics: DAE4 Sn854; Calibrated: 2018/6/14
- Phantom: SAM_Right; Type: QD000P40CD; Serial: S/N:1796
- Measurement SW: DASY52, Version 52.10 (1); SEMCAD X Version 14.6.11 (7439)

Pin=250mW/Area Scan (61x61x1): Interpolated grid: dx=1.500 mm, dy=1.500 mm
Maximum value of SAR (interpolated) = 2.85 W/kg

Pin=250mW/Zoom Scan (5x5x7)/Cube 0: Measurement grid: dx=8mm, dy=8mm, dz=5mm
Reference Value = 56.62 V/m; Power Drift = -0.15 dB
Peak SAR (extrapolated) = 3.63 W/kg
SAR(1 g) = 2.47 W/kg; SAR(10 g) = 1.62 W/kg
Maximum value of SAR (measured) = 2.87 W/kg

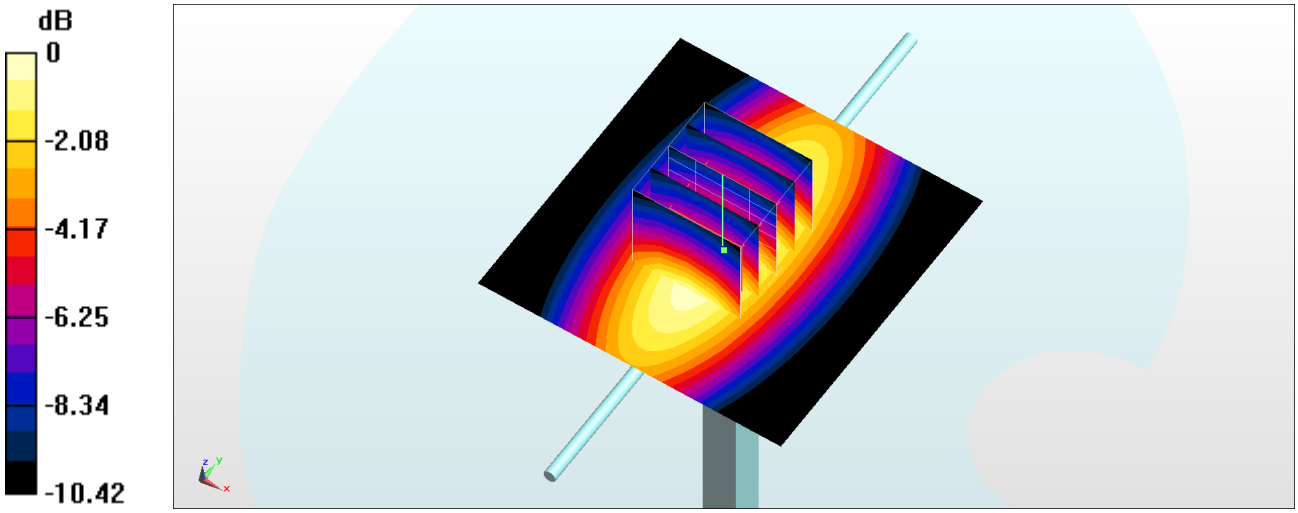

0 dB = 2.87 W/kg = 4.58 dBW/kg

System Check_Body_835MHz

DUT: D835V2-4d167

Communication System: CW; Frequency: 835 MHz;Duty Cycle: 1:1
Medium: MSL_850_180807 Medium parameters used: f = 835 MHz; σ = 0.947 S/m; ε_r = 54.941; ρ = 1000 kg/m^3
Ambient Temperature：23.6 ℃; Liquid Temperature：22.6 ℃

DASY5 Configuration
- Probe: ES3DV3 - SN3169;ConvF(6.19, 6.19, 6.19);Calibrated: 2018/5/28
- Sensor-Surface: 3mm (Mechanical Surface Detection)
- Electronics: DAE4 Sn854; Calibrated: 2018/6/14
- Phantom: SAM_Right; Type: QD000P40CD; Serial: S/N:1796
- Measurement SW: DASY52, Version 52.10 (1); SEMCAD X Version 14.6.11 (7439)

Pin=250mW/Area Scan (61x61x1): Interpolated grid: dx=1.500 mm, dy=1.500 mm
Maximum value of SAR (interpolated) = 3.07 W/kg

Pin=250mW/Zoom Scan (5x5x7)/Cube 0: Measurement grid: dx=8mm, dy=8mm, dz=5mm
Reference Value = 61.55 V/m; Power Drift = -0.06 dB
Peak SAR (extrapolated) = 3.77 W/kg
SAR(1 g) = 2.35 W/kg; SAR(10 g) = 1.53 W/kg
Maximum value of SAR (measured) = 3.03 W/kg

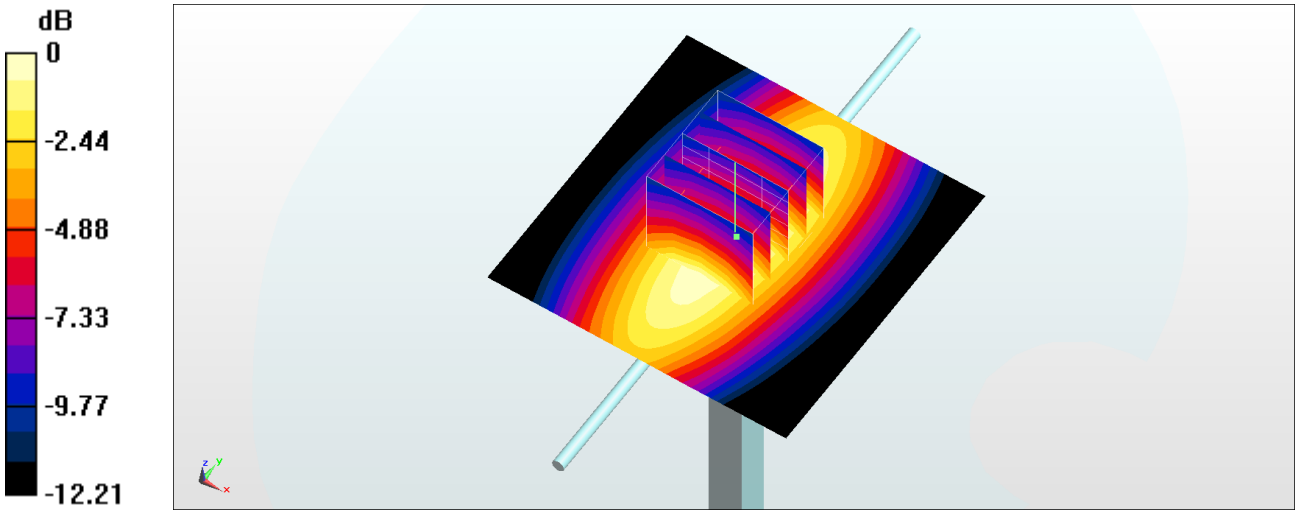

0 dB = 3.03 W/kg = 4.81 dBW/kg

Test Laboratory: Sporton International Inc. SAR/HAC Testing Lab Date: 2018/8/4

System Check_Body_1750MHz

DUT: D1750V2-1068

Communication System: CW; Frequency: 1750 MHz;Duty Cycle: 1:1
Medium: MSL_1750_180804 Medium parameters used: f = 1750 MHz; σ = 1.437 S/m; ε_r = 53.286; ρ = 1000 kg/m^3
Ambient Temperature：23.3 ℃; Liquid Temperature：22.3 ℃

DASY5 Configuration:
- Probe: ES3DV3 - SN3270; ConvF(5, 5, 5); Calibrated: 2017/9/25
- Sensor-Surface: 3mm (Mechanical Surface Detection)
- Electronics: DAE4 Sn778; Calibrated: 2018/5/25
- Phantom: SAM_Left; Type: QD000P40CD; Serial: TP:1431
- Measurement SW: DASY52, Version 52.10 (1);SEMCAD X Version 14.6.11 (7439)

Pin=250mW/Area Scan (61x61x1): Interpolated grid: dx=1.500 mm, dy=1.500 mm
Maximum value of SAR (interpolated) = 11.2 W/kg

Pin=250mW/Zoom Scan (5x5x7)/Cube 0: Measurement grid: dx=8mm, dy=8mm, dz=5mm
Reference Value = 75.28 V/m; Power Drift = 0.08 dB
Peak SAR (extrapolated) = 15.7 W/kg
SAR(1 g) = 8.93 W/kg; SAR(10 g) = 4.76 W/kg
Maximum value of SAR (measured) = 11.2 W/kg

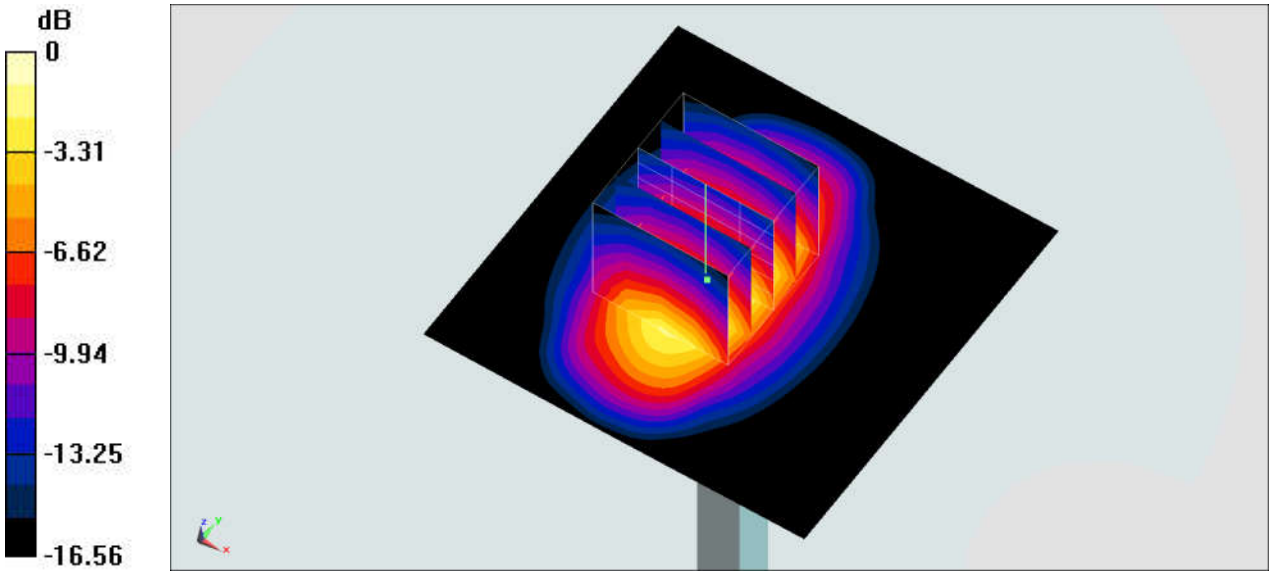

0 dB = 11.2 W/kg = 10.49 dBW/kg

System Check_Body_1750MHz

DUT: D1750V2-1068

Communication System: CW; Frequency: 1750 MHz;Duty Cycle: 1:1
Medium: MSL_1750_180809 Medium parameters used: f = 1750 MHz; σ = 1.463 S/m; ε_r = 55.13; ρ = 1000 kg/m^3
Ambient Temperature：23.6 ℃; Liquid Temperature：22.6 ℃

DASY5 Configuration
- Probe: ES3DV3 - SN3169;ConvF(5.06, 5.06, 5.06);Calibrated: 2018/5/28
- Sensor-Surface: 3mm (Mechanical Surface Detection)
- Electronics: DAE4 Sn854; Calibrated: 2018/6/14
- Phantom: SAM_Right; Type: QD000P40CD; Serial: S/N:1796
- Measurement SW: DASY52, Version 52.10 (1); SEMCAD X Version 14.6.11 (7439)

Pin=250mW/Area Scan (61x61x1): Interpolated grid: dx=1.500 mm, dy=1.500 mm
Maximum value of SAR (interpolated) = 11.6 W/kg

Pin=250mW/Zoom Scan (5x5x7)/Cube 0: Measurement grid: dx=8mm, dy=8mm, dz=5mm
Reference Value = 91.17 V/m; Power Drift = 0.02 dB
Peak SAR (extrapolated) = 15.9 W/kg
SAR(1 g) = 9.3 W/kg; SAR(10 g) = 5.07 W/kg
Maximum value of SAR (measured) = 10.9 W/kg

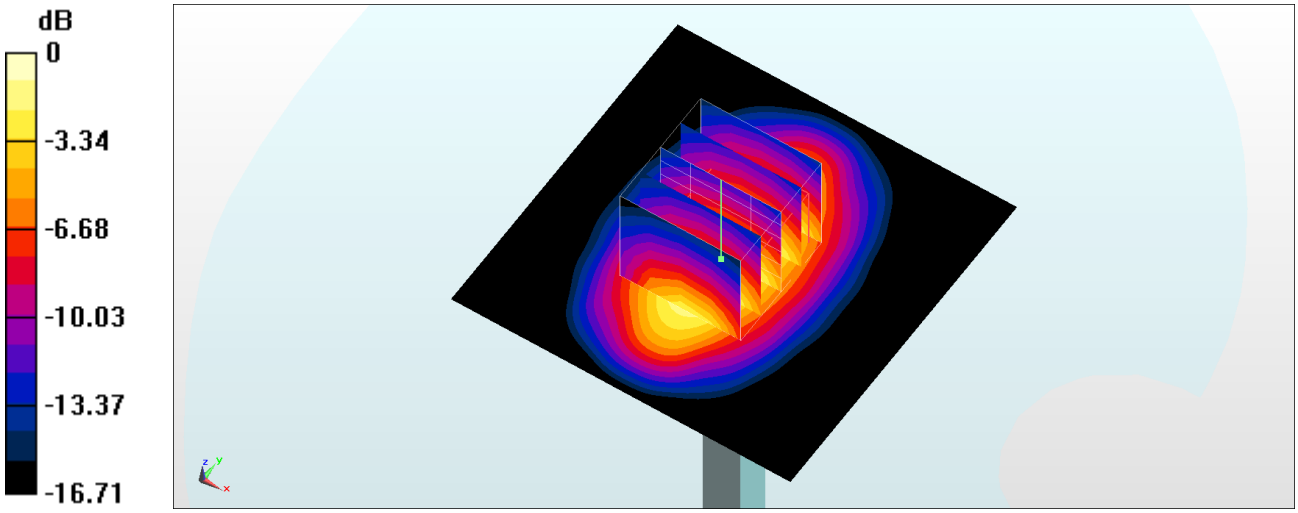

0 dB = 10.9 W/kg = 10.37 dBW/kg

System Check_Body_1750MHz

DUT: D1750V2-1068

Communication System: CW; Frequency: 1750 MHz;Duty Cycle: 1:1
Medium: MSL_1750_180809 Medium parameters used: f = 1750 MHz; σ = 1.463 S/m; ε_r = 55.13; ρ = 1000 kg/m^3
Ambient Temperature：23.6 ℃; Liquid Temperature：22.6 ℃

DASY5 Configuration
- Probe: EX3DV4 - SN7306;ConvF(8.22, 8.22, 8.22);Calibrated: 2018/7/26
- Sensor-Surface: 1.4mm (Mechanical Surface Detection)
- Electronics: DAE4 Sn853; Calibrated: 2018/7/24
- Phantom: SAM_Right; Type: QD000P40CD; Serial: S/N:1796
- Measurement SW: DASY52, Version 52.10 (1); SEMCAD X Version 14.6.11 (7439)

Pin=250mW/Area Scan (61x61x1): Interpolated grid: dx=1.500 mm, dy=1.500 mm
Maximum value of SAR (interpolated) = 14.0 W/kg

Pin=250mW/Zoom Scan (5x5x7)/Cube 0: Measurement grid: dx=8mm, dy=8mm, dz=5mm
Reference Value = 101.0 V/m; Power Drift = 0.05 dB
Peak SAR (extrapolated) = 16.4 W/kg
SAR(1 g) = 9.28 W/kg; SAR(10 g) = 5.02 W/kg
Maximum value of SAR (measured) = 13.8 W/kg

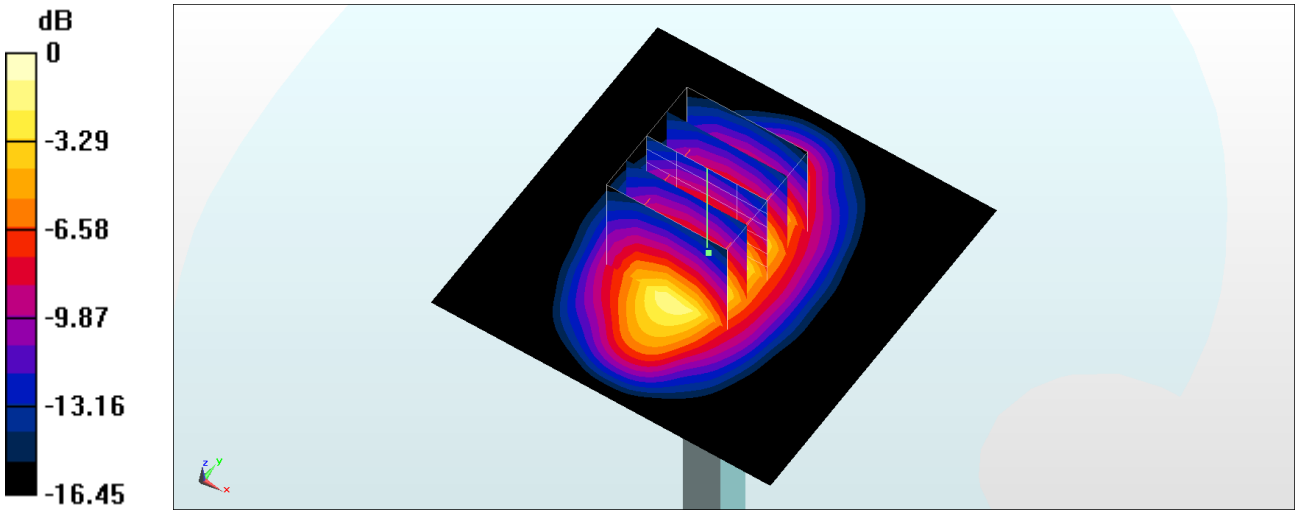

0 dB = 13.8 W/kg = 11.40 dBW/kg

Test Laboratory: Sporton International Inc. SAR/HAC Testing Lab Date: 2018/8/3

System Check_Body_1900MHz

DUT: D1900V2-5d041

Communication System: CW; Frequency: 1900 MHz;Duty Cycle: 1:1
Medium: MSL_1900_180803 Medium parameters used: f = 1900 MHz; σ = 1.546 S/m; ε_r = 53.585; ρ = 1000 kg/m^3
Ambient Temperature：23.3 ℃; Liquid Temperature：22.3 ℃

DASY5 Configuration:
- Probe: EX3DV4 - SN3976; ConvF(8.09, 8.09, 8.09); Calibrated: 2018/1/23
- Sensor-Surface: 1.4mm (Mechanical Surface Detection)
- Electronics: DAE4 Sn1424; Calibrated: 2018/1/18
- Phantom: SAM_Left; Type: QD000P40CD; Serial: TP:1431
- Measurement SW: DASY52, Version 52.10 (1);SEMCAD X Version 14.6.11 (7439)

Pin=250mW/Area Scan (61x61x1): Interpolated grid: dx=1.500 mm, dy=1.500 mm
Maximum value of SAR (interpolated) = 16.6 W/kg

Pin=250mW/Zoom Scan (5x5x7)/Cube 0: Measurement grid: dx=8mm, dy=8mm, dz=5mm
Reference Value = 104.1 V/m; Power Drift = 0.08 dB
Peak SAR (extrapolated) = 18.9 W/kg
SAR(1 g) = 10.5 W/kg; SAR(10 g) = 5.5 W/kg
Maximum value of SAR (measured) = 15.7 W/kg

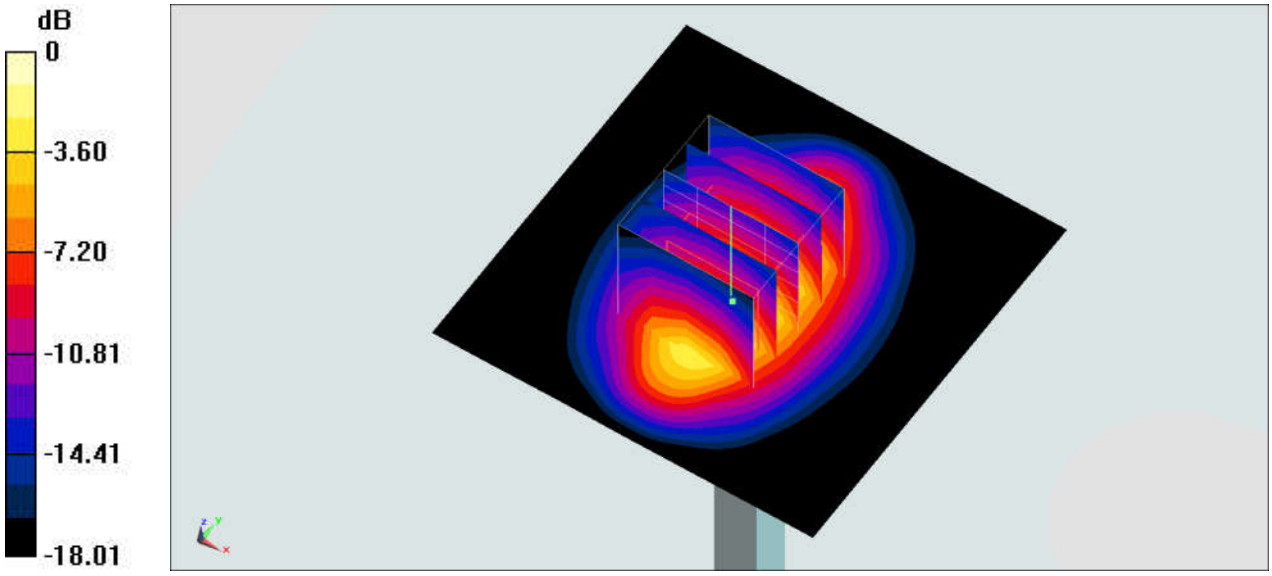

0 dB = 15.7 W/kg = 11.96 dBW/kg

Test Laboratory: Sporton International Inc. SAR/HAC Testing Lab Date: 2018/8/3

System Check_Body_1900MHz

DUT: D1900V2-5d041

Communication System: CW; Frequency: 1900 MHz;Duty Cycle: 1:1
Medium: MSL_1900_180803 Medium parameters used: f = 1900 MHz; σ = 1.546 S/m; ε_r = 53.585; ρ = 1000 kg/m^3
Ambient Temperature：23.3 ℃; Liquid Temperature：22.3 ℃

DASY5 Configuration:
- Probe: ES3DV3 - SN3270; ConvF(4.9, 4.9, 4.9); Calibrated: 2017/9/25
- Sensor-Surface: 3mm (Mechanical Surface Detection)
- Electronics: DAE4 Sn778; Calibrated: 2018/5/25
- Phantom: SAM_Left; Type: QD000P40CD; Serial: TP:1431
- Measurement SW: DASY52, Version 52.10 (1);SEMCAD X Version 14.6.11 (7439)

Pin=250mW/Area Scan (61x61x1): Interpolated grid: dx=1.500 mm, dy=1.500 mm
Maximum value of SAR (interpolated) = 12.6 W/kg

Pin=250mW/Zoom Scan (5x5x7)/Cube 0: Measurement grid: dx=8mm, dy=8mm, dz=5mm
Reference Value = 93.55 V/m; Power Drift = -0.06 dB
Peak SAR (extrapolated) = 17.9 W/kg
SAR(1 g) = 9.92 W/kg; SAR(10 g) = 5.18 W/kg
Maximum value of SAR (measured) = 12.5 W/kg

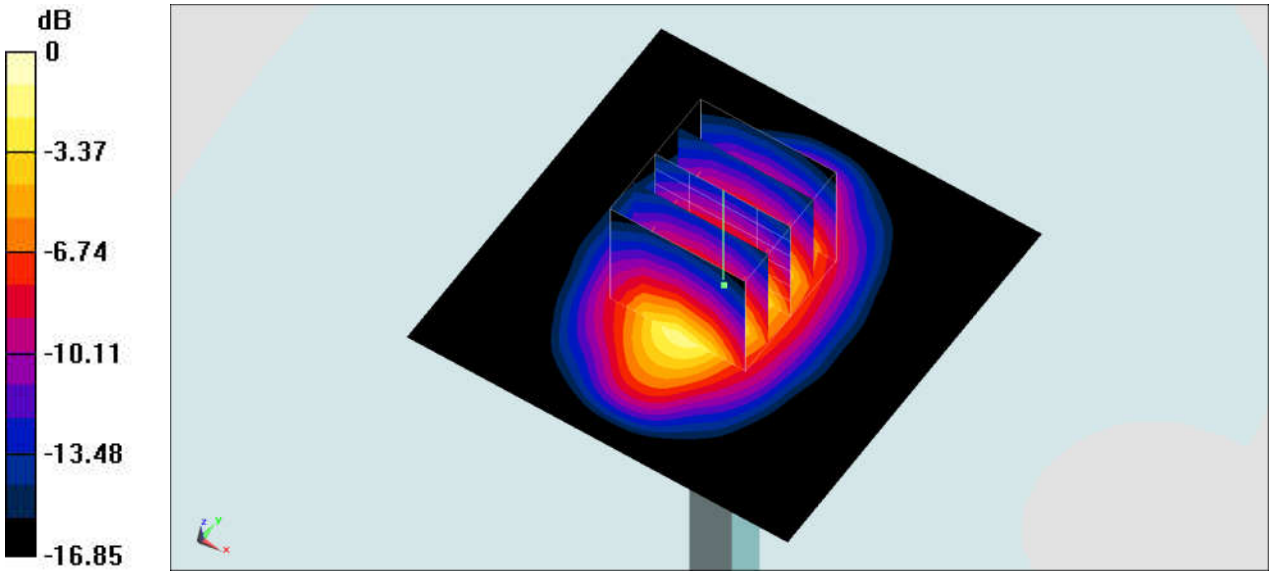

0 dB = 12.5 W/kg = 10.97 dBW/kg

System Check_Body_1900MHz

DUT: D1900V2-5d041

Communication System: CW; Frequency: 1900 MHz;Duty Cycle: 1:1
Medium: MSL_1900_180809 Medium parameters used: f = 1900 MHz; σ = 1.55 S/m; ε_r = 51.6; ρ = 1000 kg/m^3
Ambient Temperature：23.6 ℃; Liquid Temperature：22.6 ℃

DASY5 Configuration
- Probe: ES3DV3 - SN3169;ConvF(4.8, 4.8, 4.8);Calibrated: 2018/5/28
- Sensor-Surface: 3mm (Mechanical Surface Detection)
- Electronics: DAE4 Sn854; Calibrated: 2018/6/14
- Phantom: SAM_Right; Type: QD000P40CD; Serial: S/N:1796
- Measurement SW: DASY52, Version 52.10 (1); SEMCAD X Version 14.6.11 (7439)

Pin=250mW/Area Scan (61x61x1): Interpolated grid: dx=1.500 mm, dy=1.500 mm
Maximum value of SAR (interpolated) = 12.9 W/kg

Pin=250mW/Zoom Scan (5x5x7)/Cube 0: Measurement grid: dx=8mm, dy=8mm, dz=5mm
Reference Value = 94.12 V/m; Power Drift = -0.17 dB
Peak SAR (extrapolated) = 17.8 W/kg
SAR(1 g) = 10.1 W/kg; SAR(10 g) = 5.27 W/kg
Maximum value of SAR (measured) = 12.4 W/kg

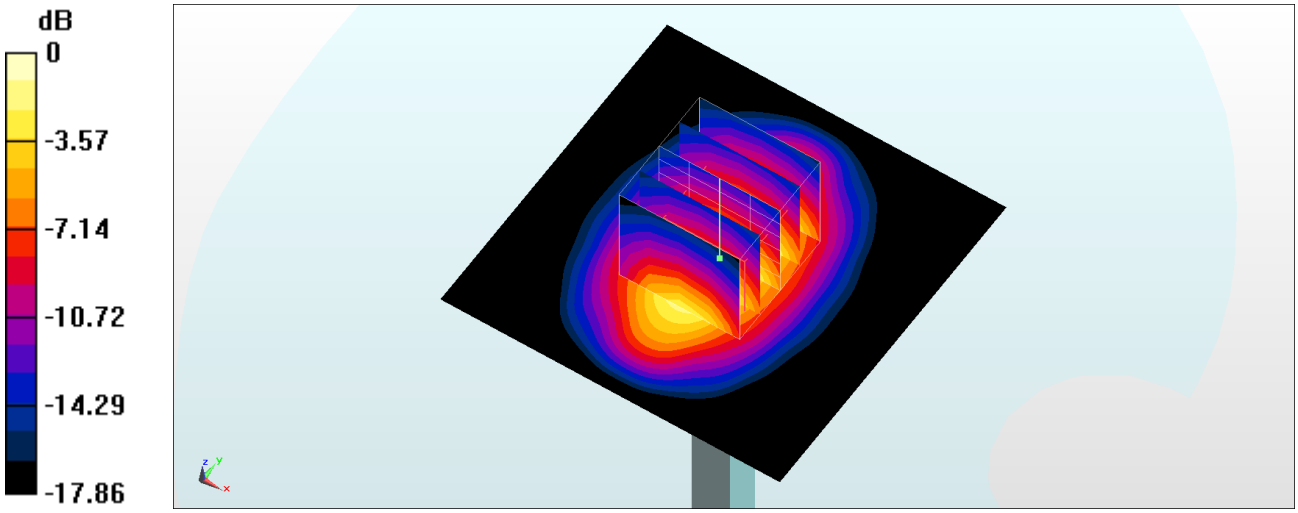

0 dB = 12.4 W/kg = 10.93 dBW/kg

System Check_Body_2450MHz

DUT: D2450V2-736

Communication System: CW; Frequency: 2450 MHz;Duty Cycle: 1:1
Medium: MSL_2450_180808 Medium parameters used: f = 2450 MHz; σ = 1.983 S/m; ε_r = 51.409; ρ = 1000 kg/m^3
Ambient Temperature：23.5 ℃; Liquid Temperature：22.5 ℃

DASY5 Configuration
- Probe: ES3DV3 - SN3169;ConvF(4.4, 4.4, 4.4);Calibrated: 2018/5/28
- Sensor-Surface: 3mm (Mechanical Surface Detection)
- Electronics: DAE4 Sn854; Calibrated: 2018/6/14
- Phantom: SAM_Left; Type: QD000P40CD; Serial: S/N:1801
- Measurement SW: DASY52, Version 52.10 (1); SEMCAD X Version 14.6.11 (7439)

Pin=250mW/Area Scan (61x61x1): Interpolated grid: dx=1.200 mm, dy=1.200 mm
Maximum value of SAR (interpolated) = 17.1 W/kg

Pin=250mW/Zoom Scan (7x7x7)/Cube 0: Measurement grid: dx=5mm, dy=5mm, dz=5mm
Reference Value = 95.24 V/m; Power Drift = -0.02 dB
Peak SAR (extrapolated) = 26.9 W/kg
SAR(1 g) = 12.9 W/kg; SAR(10 g) = 5.97 W/kg
Maximum value of SAR (measured) = 17.1 W/kg

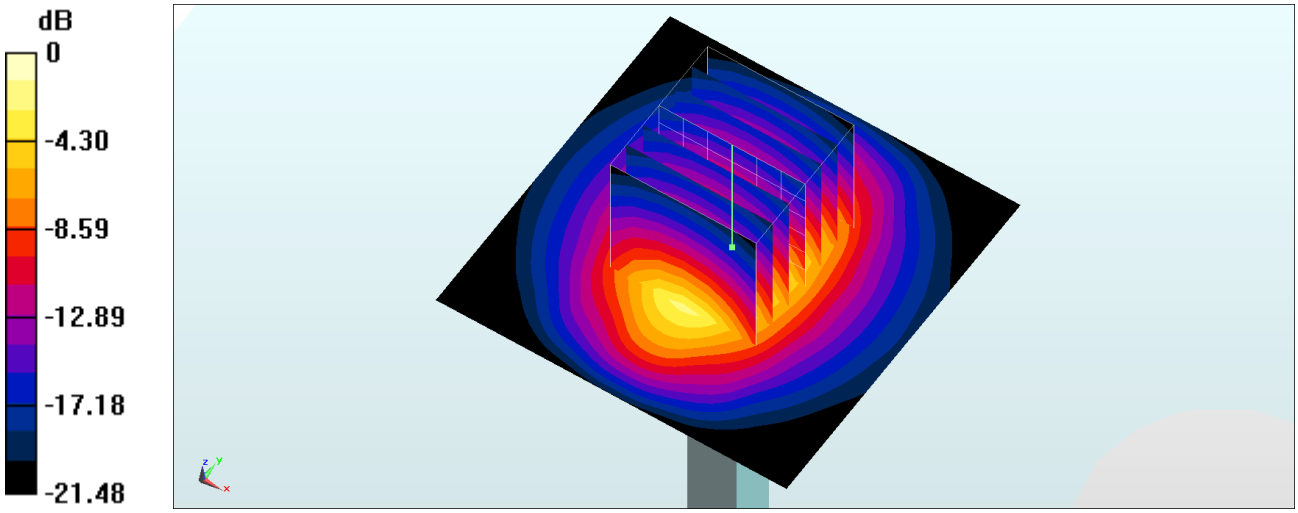

0 dB = 17.1 W/kg = 12.33 dBW/kg

System Check_Body_2600MHz

DUT: D2600V2-1008

Communication System: CW; Frequency: 2600 MHz;Duty Cycle: 1:1
Medium: MSL_2600_180804 Medium parameters used: f = 2600 MHz; σ = 2.159 S/m; ε_r = 52.987; ρ = 1000 kg/m^3
Ambient Temperature：23.2 ℃; Liquid Temperature：22.2 ℃

DASY5 Configuration
- Probe: EX3DV4 - SN3976;ConvF(7.37, 7.37, 7.37);Calibrated: 2018/1/23
- Sensor-Surface: 1.4mm (Mechanical Surface Detection)
- Electronics: DAE4 Sn1424; Calibrated: 2018/1/18
- Phantom: SAM_Right; Type: QD000P40CD; Serial: S/N:1796
- Measurement SW: DASY52, Version 52.10 (1); SEMCAD X Version 14.6.11 (7439)

Pin=250mW/Area Scan (61x61x1): Interpolated grid: dx=1.200 mm, dy=1.200 mm
Maximum value of SAR (interpolated) = 23.2 W/kg

Pin=250mW/Zoom Scan (7x7x7)/Cube 0: Measurement grid: dx=5mm, dy=5mm, dz=5mm
Reference Value = 106.6 V/m; Power Drift = -0.08 dB
Peak SAR (extrapolated) = 27.7 W/kg
SAR(1 g) = 13.5 W/kg; SAR(10 g) = 6.08 W/kg
Maximum value of SAR (measured) = 22.3 W/kg

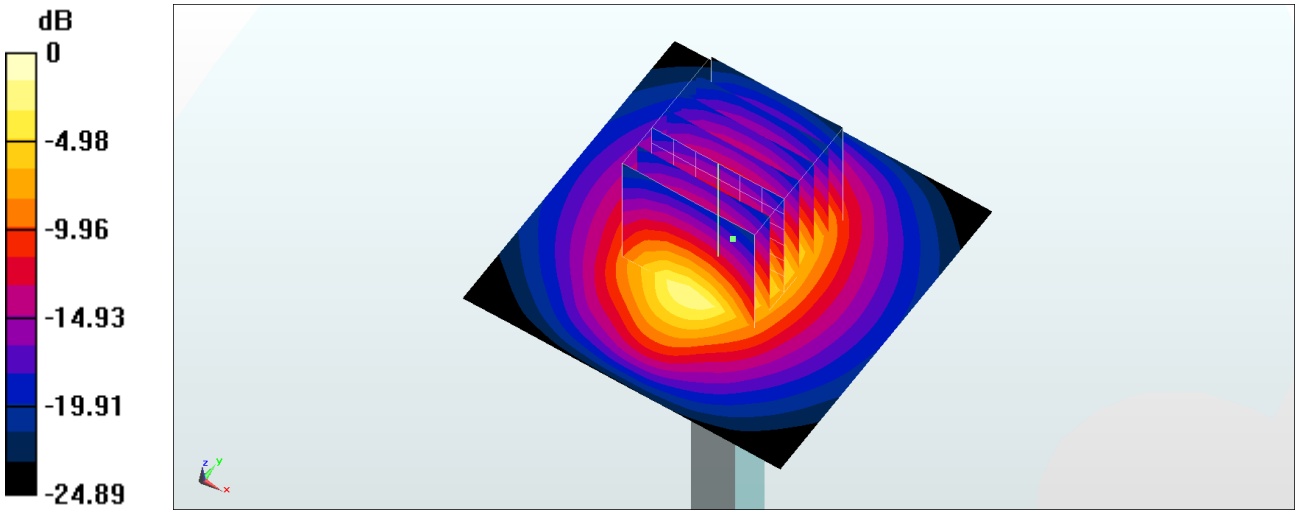

0 dB = 22.3 W/kg = 13.48 dBW/kg

System Check_Body_5250MHz

DUT: D5GHzV2-1006

Communication System: CW; Frequency: 5250 MHz;Duty Cycle: 1:1
Medium: MSL_5G_180821 Medium parameters used: f = 5250 MHz; σ = 5.204 S/m; ε_r = 49.131; ρ = 1000 kg/m^3
Ambient Temperature：23.3 ℃; Liquid Temperature：22.3 ℃

DASY5 Configuration:
- Probe: EX3DV4 - SN7306; ConvF(4.8, 4.8, 4.8); Calibrated: 2018/7/26
- Sensor-Surface: 1.4mm (Mechanical Surface Detection)
- Electronics: DAE4 Sn853; Calibrated: 2018/7/24
- Phantom: SAM_Left; Type: QD000P40CD; Serial: TP:1815
- Measurement SW: DASY52, Version 52.10 (1);SEMCAD X Version 14.6.11 (7439)

Pin=100mW/Area Scan (71x71x1): Interpolated grid: dx=1.000 mm, dy=1.000 mm
Maximum value of SAR (interpolated) = 16.5 W/kg

Pin=100mW/Zoom Scan (7x7x7)/Cube 0: Measurement grid: dx=4mm, dy=4mm, dz=1.4mm
Reference Value = 64.76 V/m; Power Drift = 0.19 dB
Peak SAR (extrapolated) = 27.2 W/kg
SAR(1 g) = 7.28 W/kg; SAR(10 g) = 2.06 W/kg
Maximum value of SAR (measured) = 18.0 W/kg

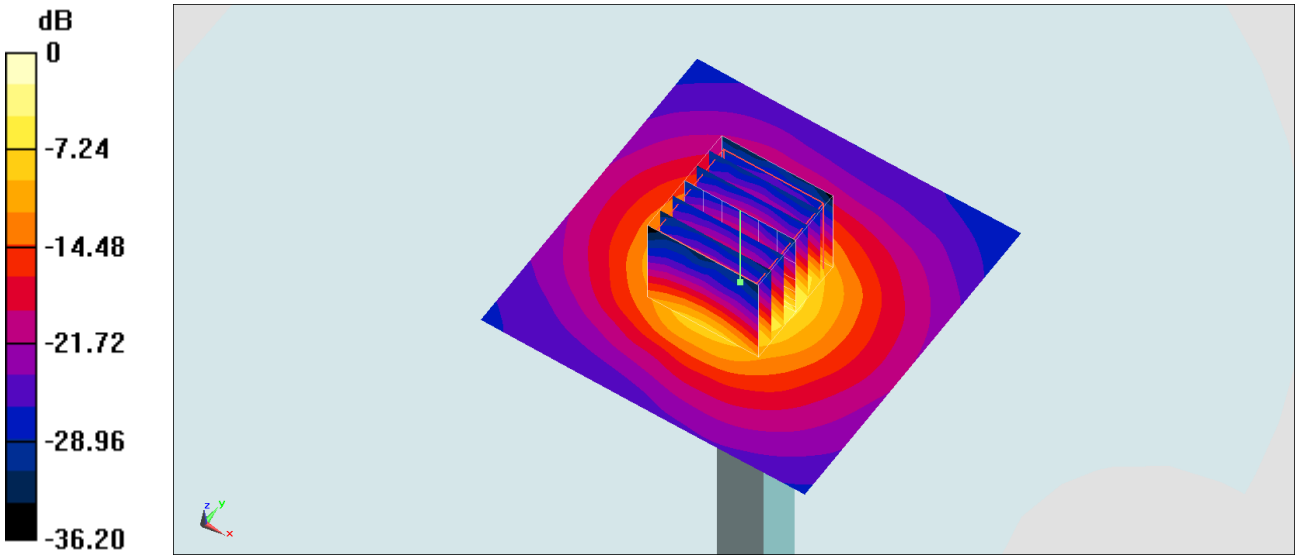

0 dB = 18.0 W/kg = 12.55 dBW/kg

System Check_Body_5250MHz

DUT: D5GHzV2-1006

Communication System: CW; Frequency: 5250 MHz;Duty Cycle: 1:1
Medium: MSL_5G_180822 Medium parameters used: f = 5250 MHz; σ = 5.334 S/m; ε_r = 47.421; ρ = 1000 kg/m^3
Ambient Temperature：23.4 ℃; Liquid Temperature：22.4 ℃

DASY5 Configuration:
- Probe: EX3DV4 - SN7306; ConvF(4.8, 4.8, 4.8); Calibrated: 2018/7/26
- Sensor-Surface: 1.4mm (Mechanical Surface Detection)
- Electronics: DAE4 Sn853; Calibrated: 2018/7/24
- Phantom: SAM_Left; Type: QD000P40CD; Serial: TP:1815
- Measurement SW: DASY52, Version 52.10 (1);SEMCAD X Version 14.6.11 (7439)

Pin=100mW/Area Scan (71x71x1): Interpolated grid: dx=1.000 mm, dy=1.000 mm
Maximum value of SAR (interpolated) = 16.9 W/kg

Pin=100mW/Zoom Scan (7x7x7)/Cube 0: Measurement grid: dx=4mm, dy=4mm, dz=1.4mm
Reference Value = 64.76 V/m; Power Drift = 0.19 dB
Peak SAR (extrapolated) = 27.8 W/kg
SAR(1 g) = 7.46 W/kg; SAR(10 g) = 2.12 W/kg
Maximum value of SAR (measured) = 18.4 W/kg

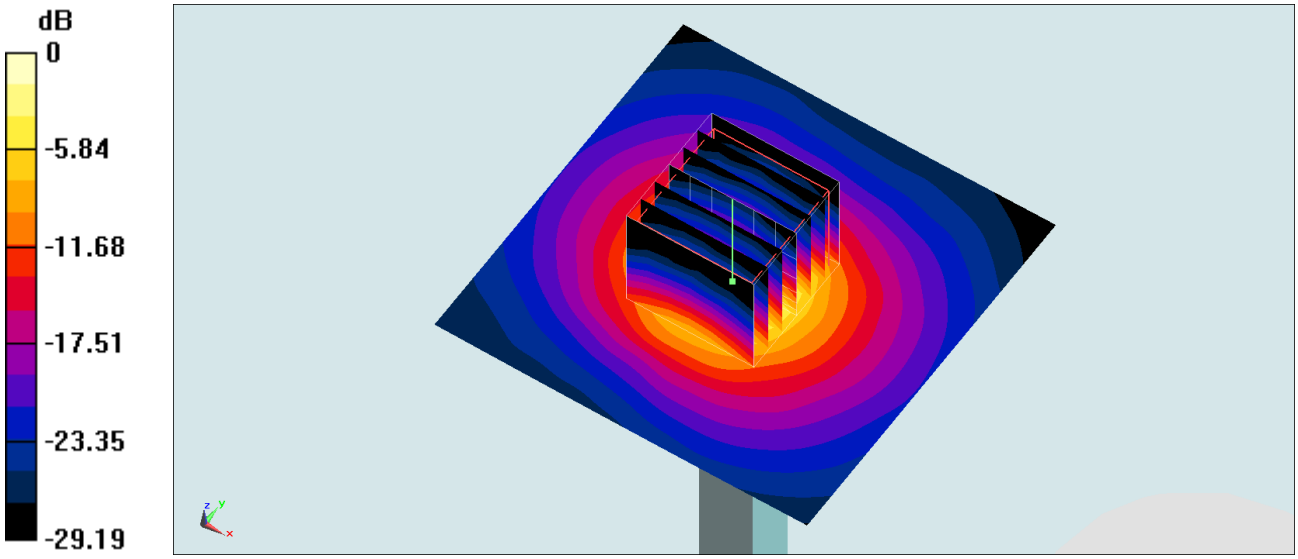

0 dB = 18.4 W/kg = 12.65 dBW/kg

System Check_Body_5600MHz

DUT: D5GHzV2-1006

Communication System: CW; Frequency: 5600 MHz;Duty Cycle: 1:1
Medium: MSL_5G_180821 Medium parameters used: f = 5600 MHz; σ = 5.661 S/m; ε_r = 48.543; ρ = 1000 kg/m^3
Ambient Temperature：23.3 ℃; Liquid Temperature：22.3 ℃

DASY5 Configuration:
- Probe: EX3DV4 - SN7306; ConvF(4.03, 4.03, 4.03); Calibrated: 2018/7/26
- Sensor-Surface: 1.4mm (Mechanical Surface Detection)
- Electronics: DAE4 Sn853; Calibrated: 2018/7/24
- Phantom: SAM_Left; Type: QD000P40CD; Serial: TP:1815
- Measurement SW: DASY52, Version 52.10 (1);SEMCAD X Version 14.6.11 (7439)

Pin=100mW/Area Scan (71x71x1): Interpolated grid: dx=1.000 mm, dy=1.000 mm
Maximum value of SAR (interpolated) = 18.2 W/kg

Pin=100mW/Zoom Scan (7x7x7)/Cube 0: Measurement grid: dx=4mm, dy=4mm, dz=1.4mm
Reference Value = 63.40 V/m; Power Drift = -0.08 dB
Peak SAR (extrapolated) = 33.9 W/kg
SAR(1 g) = 7.5 W/kg; SAR(10 g) = 2.09 W/kg
Maximum value of SAR (measured) = 19.6 W/kg

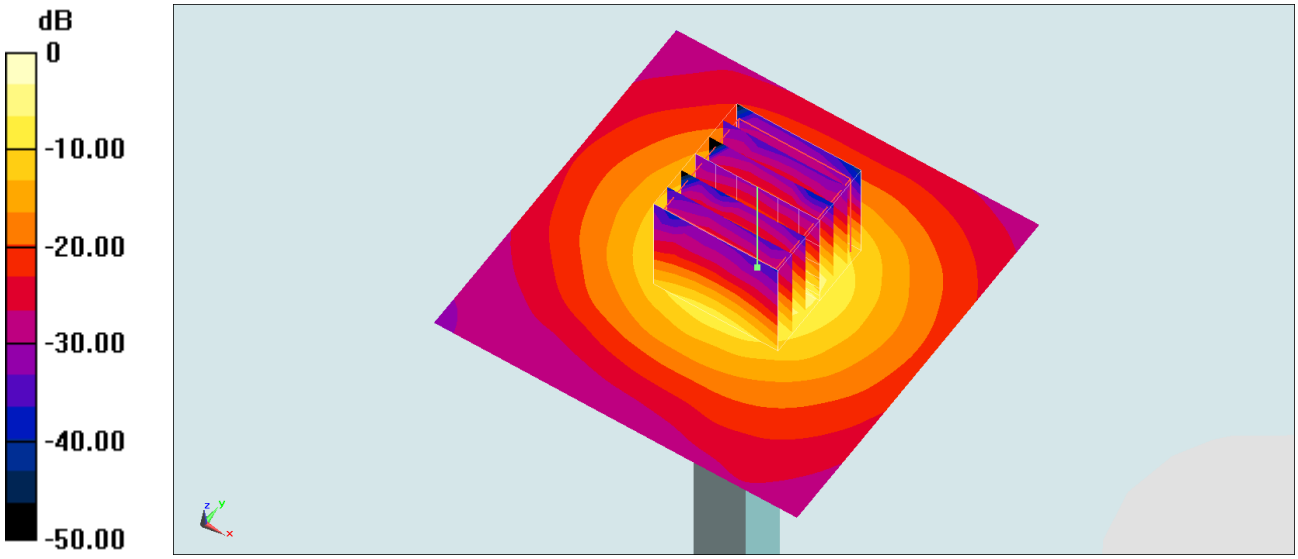

0 dB = 19.6 W/kg = 12.92 dBW/kg

System Check_Body_5750MHz

DUT: D5GHzV2-1006

Communication System: CW; Frequency: 5750 MHz;Duty Cycle: 1:1
Medium: MSL_5G_180821 Medium parameters used: f = 5750 MHz; σ = 5.87 S/m; ε_r = 48.325; ρ = 1000 kg/m^3
Ambient Temperature：23.3 ℃; Liquid Temperature：22.3 ℃

DASY5 Configuration:
- Probe: EX3DV4 - SN7306; ConvF(4.37, 4.37, 4.37); Calibrated: 2018/7/26
- Sensor-Surface: 1.4mm (Mechanical Surface Detection)
- Electronics: DAE4 Sn853; Calibrated: 2018/7/24
- Phantom: SAM_Left; Type: QD000P40CD; Serial: TP:1815
- Measurement SW: DASY52, Version 52.10 (1);SEMCAD X Version 14.6.11 (7439)

Pin=100mW/Area Scan (71x71x1): Interpolated grid: dx=1.000 mm, dy=1.000 mm
Maximum value of SAR (interpolated) = 16.8 W/kg

Pin=100mW/Zoom Scan (7x7x7)/Cube 0: Measurement grid: dx=4mm, dy=4mm, dz=1.4mm
Reference Value = 58.28 V/m; Power Drift = -0.07 dB
Peak SAR (extrapolated) = 32.2 W/kg
SAR(1 g) = 6.93 W/kg; SAR(10 g) = 1.93 W/kg
Maximum value of SAR (measured) = 18.3 W/kg

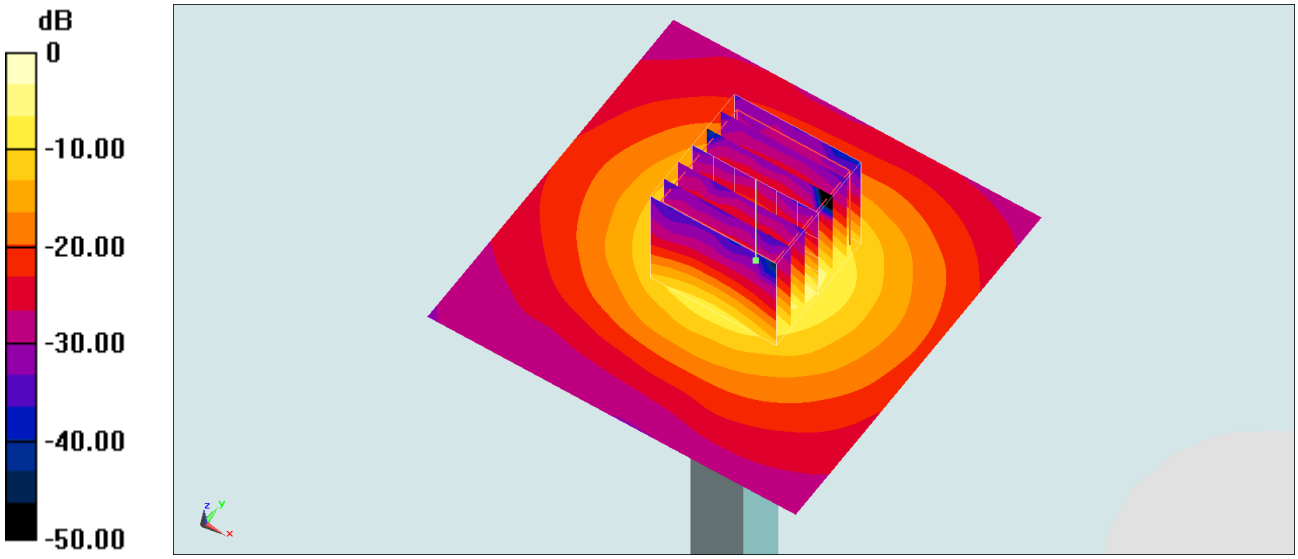

0 dB = 18.3 W/kg = 12.62 dBW/kg

System Check_Body_5750MHz

DUT: D5GHzV2-1006

Communication System: CW; Frequency: 5750 MHz;Duty Cycle: 1:1
Medium: MSL_5G_180822 Medium parameters used: f = 5750 MHz; σ = 6.002 S/m; ε_r = 46.584; ρ = 1000 kg/m^3
Ambient Temperature：23.4 ℃; Liquid Temperature：22.4 ℃

DASY5 Configuration:
- Probe: EX3DV4 - SN7306; ConvF(4.37, 4.37, 4.37); Calibrated: 2018/7/26
- Sensor-Surface: 1.4mm (Mechanical Surface Detection)
- Electronics: DAE4 Sn853; Calibrated: 2018/7/24
- Phantom: SAM_Left; Type: QD000P40CD; Serial: TP:1815
- Measurement SW: DASY52, Version 52.10 (1);SEMCAD X Version 14.6.11 (7439)

Pin=100mW/Area Scan (71x71x1): Interpolated grid: dx=1.000 mm, dy=1.000 mm
Maximum value of SAR (interpolated) = 16.4 W/kg

Pin=100mW/Zoom Scan (7x7x7)/Cube 0: Measurement grid: dx=4mm, dy=4mm, dz=1.4mm
Reference Value = 59.11 V/m; Power Drift = 0.10 dB
Peak SAR (extrapolated) = 30.7 W/kg
SAR(1 g) = 6.84 W/kg; SAR(10 g) = 1.91 W/kg
Maximum value of SAR (measured) = 18.0 W/kg

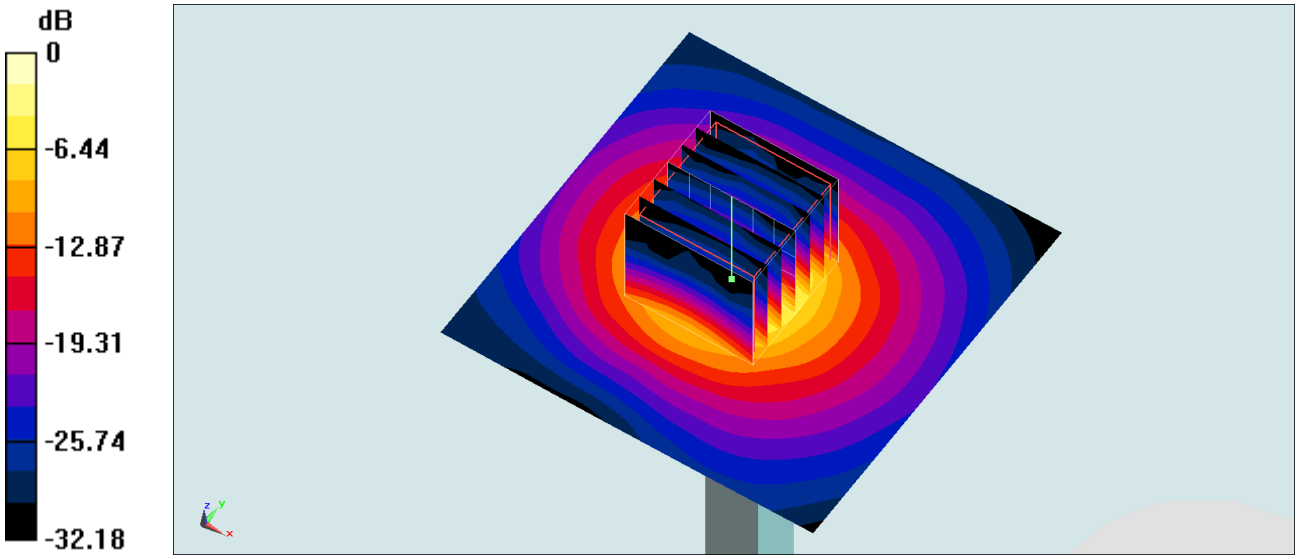

0 dB = 18.0 W/kg = 12.55 dBW/kg

System Check_Body_5750MHz

DUT: D5GHzV2-1006

Communication System: CW; Frequency: 5750 MHz;Duty Cycle: 1:1
Medium: MSL_5G_180825 Medium parameters used: f = 5750 MHz; σ = 6.09 S/m; ε_r = 46.581; ρ = 1000 kg/m^3
Ambient Temperature：23.5 ℃; Liquid Temperature：22.5 ℃

DASY5 Configuration
- Probe: EX3DV4 - SN3931;ConvF(4.32, 4.32, 4.32);Calibrated: 2017/9/29
- Sensor-Surface: 1.4mm (Mechanical Surface Detection)
- Electronics: DAE4 Sn1399; Calibrated: 2017/11/16
- Phantom: SAM_Right; Type: QD000P40CD; Serial: S/N:1796
- Measurement SW: DASY52, Version 52.10 (1); SEMCAD X Version 14.6.11 (7439)

Pin=100mW/Area Scan (71x71x1): Interpolated grid: dx=1.000 mm, dy=1.000 mm
Maximum value of SAR (interpolated) = 18.8 W/kg

Pin=100mW/Zoom Scan (7x7x7)/Cube 0: Measurement grid: dx=4mm, dy=4mm, dz=1.4mm
Reference Value = 63.42 V/m; Power Drift = -0.08 dB
Peak SAR (extrapolated) = 35.0 W/kg
SAR(1 g) = 7.45 W/kg; SAR(10 g) = 2.07 W/kg
Maximum value of SAR (measured) = 19.1 W/kg

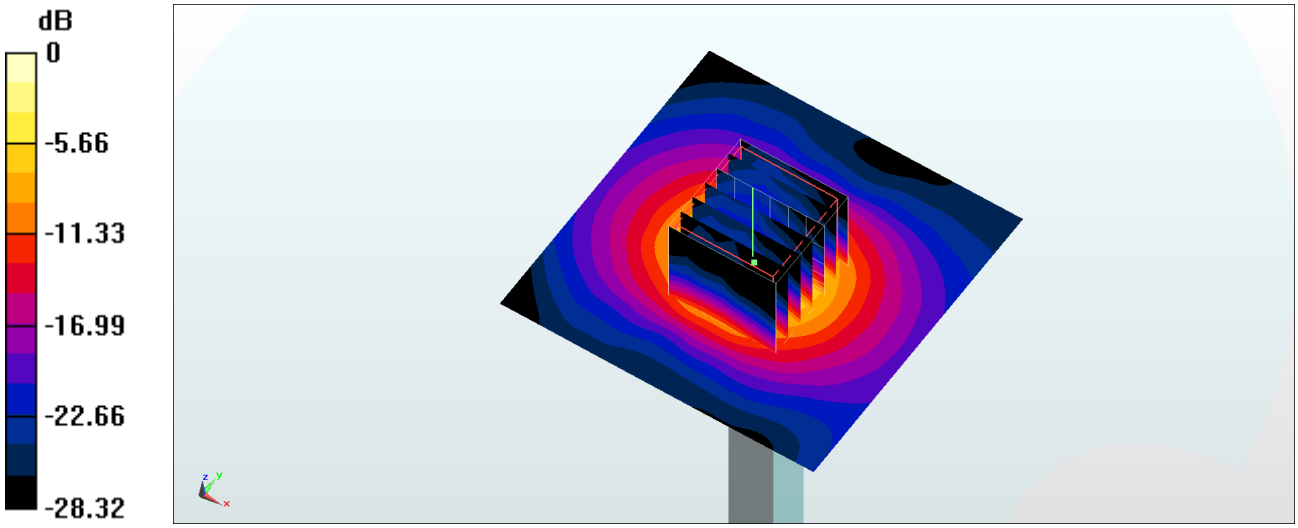

0 dB = 19.1 W/kg = 12.81 dBW/kg