08 / 08 / 2018 REVIEW ONLY

TC72 / TC77

Touch Computer

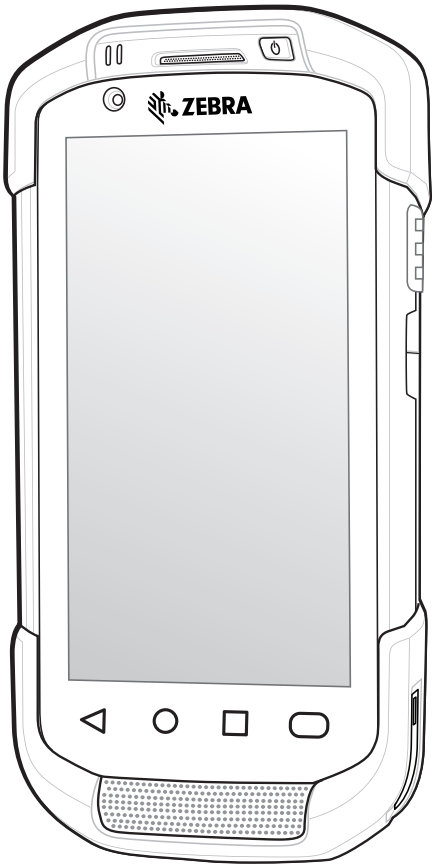

Quick Start Guide

ZEBRA

P1234567-001

REVIEW ONLY - REVIEW ONLY - REVIEW ONLY

Copyright

© **2018 ZIH Corp. and/or its affiliates.** All rights reserved. ZEBRA and the stylized Zebra head are trademarks of ZIH Corp., registered in many jurisdictions worldwide. All other trademarks are the property of their respective owners.

COPYRIGHTS & TRADEMARKS: For complete copyright and trademark information, go to www.zebra.com/copyright.

WARRANTY: For complete warranty information, go to www.zebra.com/warranty.

END USER LICENSE AGREEMENT: For complete EULA information, go to www.zebra.com/eula.

Terms of Use

- Proprietary Statement

  This manual contains proprietary information of Zebra Technologies Corporation and its subsidiaries (“Zebra Technologies”). It is intended solely for the information and use of parties operating and maintaining the equipment described herein. Such proprietary information may not be used, reproduced, or disclosed to any other parties for any other purpose without the express, written permission of Zebra Technologies.
- Product Improvements

  Continuous improvement of products is a policy of Zebra Technologies. All specifications and designs are subject to change without notice.
- Liability Disclaimer

  Zebra Technologies takes steps to ensure that its published Engineering specifications and manuals are correct; however, errors do occur. Zebra Technologies reserves the right to correct any such errors and disclaims liability resulting therefrom.
- Limitation of Liability

  In no event shall Zebra Technologies or anyone else involved in the creation, production, or delivery of the accompanying product (including hardware and software) be liable for any damages whatsoever (including, without limitation, consequential damages including loss of business profits, business interruption, or loss of business information) arising out of the use of, the results of use of, or inability to use such product, even if Zebra Technologies has been advised of the possibility of such damages. Some jurisdictions do not allow the exclusion or limitation of incidental or consequential damages, so the above limitation or exclusion may not apply to you.

REVIEW ONLY - REVIEW ONLY - REVIEW ONLY

Features

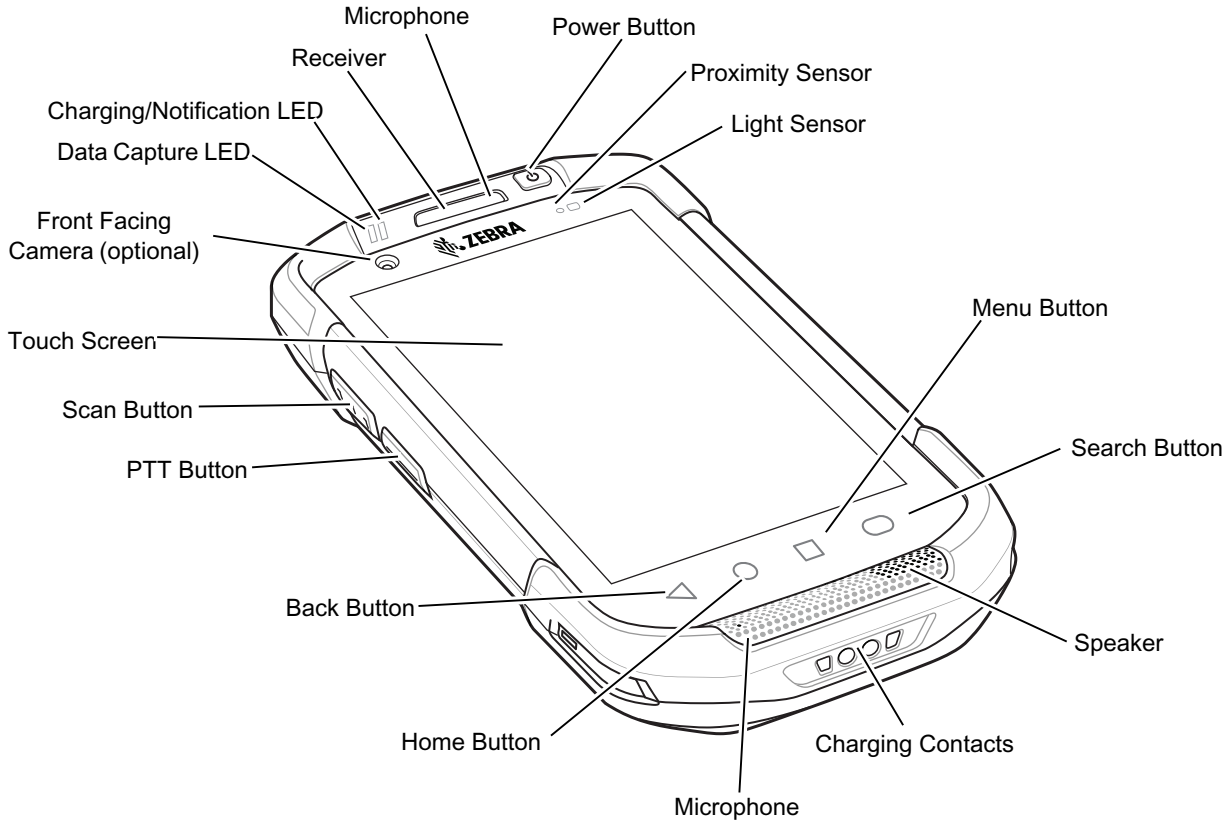

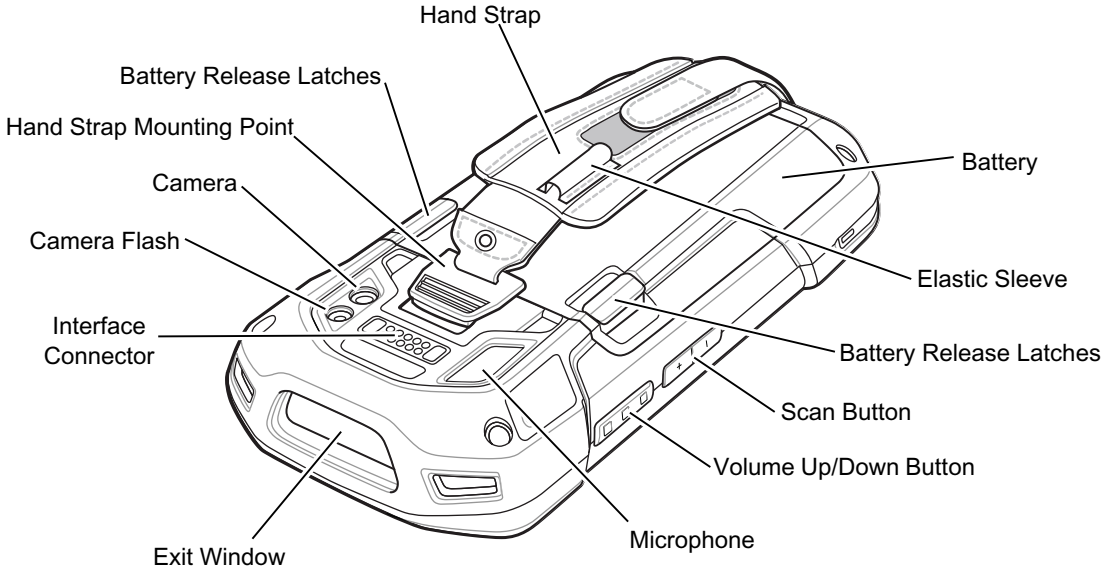

REVIEW ONLY - REVIEW ONLY - REVIEW ONLY

Installing the SIM Card

NOTE: A SIM card is only required on the TC77.

NOTE: Only use a nano SIM card.

CAUTION: For proper electrostatic discharge (ESD) precautions to avoid damaging the SIM card. Proper ESD precautions include, but not limited to, working on an ESD mat and ensuring that the user is properly grounded.

1. Remove access cover.

Figure 1 TC77 SIM Slot Locations

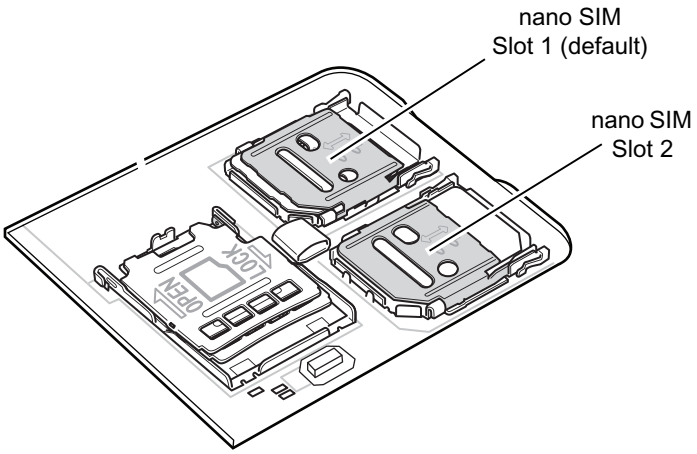

2. Slide the SIM card holder to the unlock position.

Figure 2 Unlock SIM Card Holder

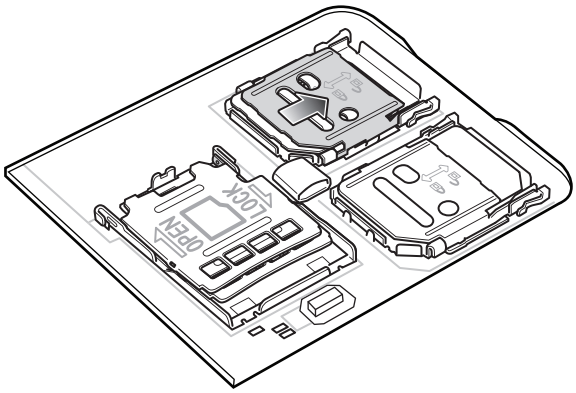

3. Lift the SIM card holder door.

REVIEW ONLY - REVIEW ONLY - REVIEW ONLY

Figure 3 Lift the SIM Card Holder

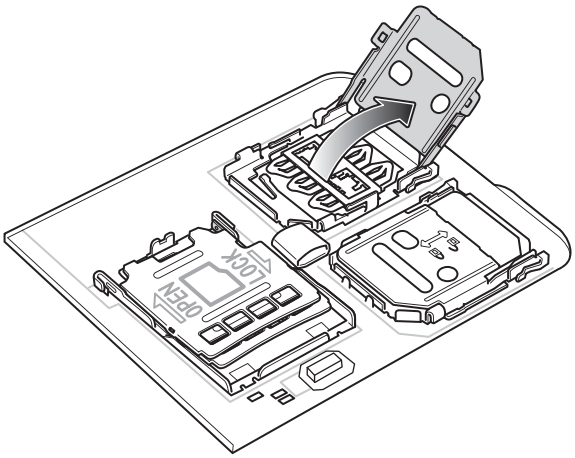

4. Place the nano SIM card into the card holder with contacts facing down.

Figure 4 Place SIM Card in Holder

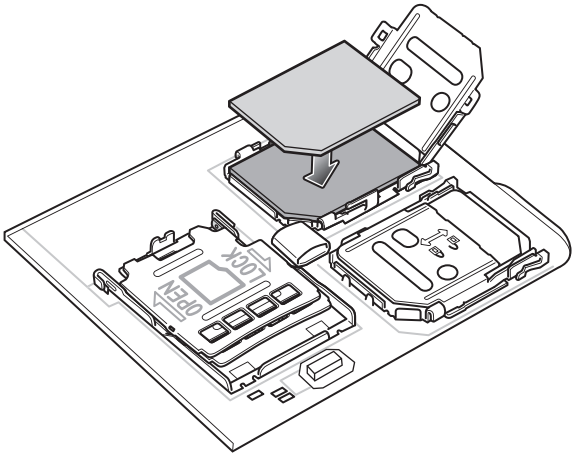

5. Close the SIM card holder door and slide to the lock position.

Figure 5 Close and Lock SIM Card Holder Door

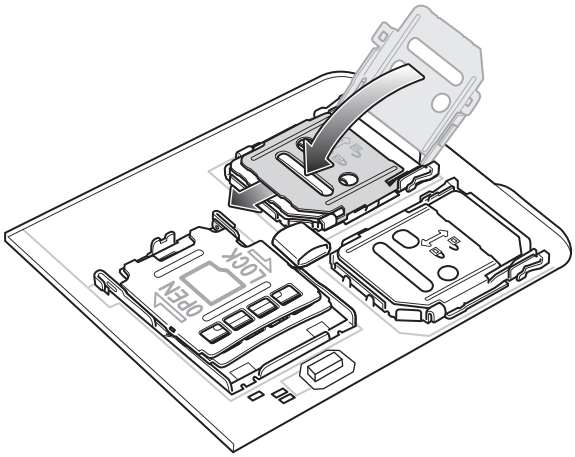

CAUTION: Access door must be replaced and securely seated to ensure proper device sealing.

REVIEW ONLY - REVIEW ONLY - REVIEW ONLY

6. Re-install the access door.

Figure 6 Replace Access Door

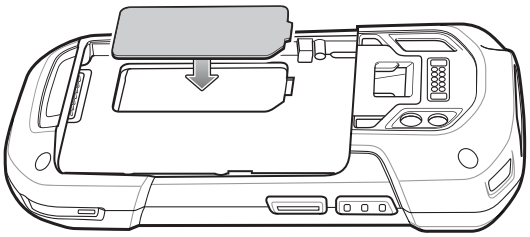

Installing a microSD Card

The microSD card slot provides secondary non-volatile storage. The slot is located under the battery pack. Refer to the documentation provided with the card for more information, and follow the manufacturer's recommendations for use.

CAUTION: Follow proper electrostatic discharge (ESD) precautions to avoid damaging the microSD card. Proper ESD precautions include, but are not limited to, working on an ESD mat and ensuring that the operator is properly grounded.

1. Remove the hand strap, if installed.
2. Lift the access door.

Figure 7 Lift Access Door

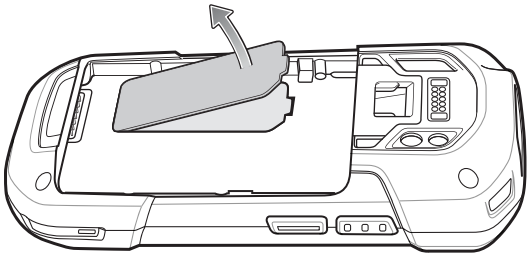

3. Slide the microSD card holder to the Open position.

Figure 8 Open microSD Card Holder

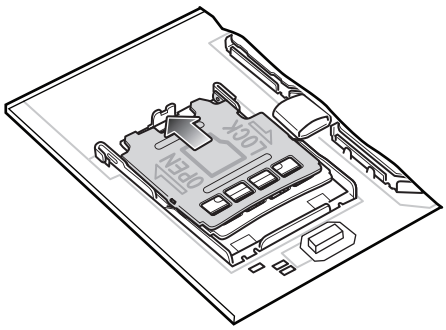

4. Lift the microSD card holder.

REVIEW ONLY - REVIEW ONLY - REVIEW ONLY

Figure 9 Lift microSD Card Holder

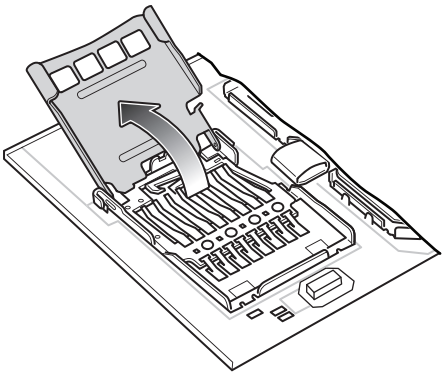

5. Insert the microSD card into the card holder door ensuring that the card slides into the holding tabs on each side of the door.

Figure 10 Insert microSD Card into Holder

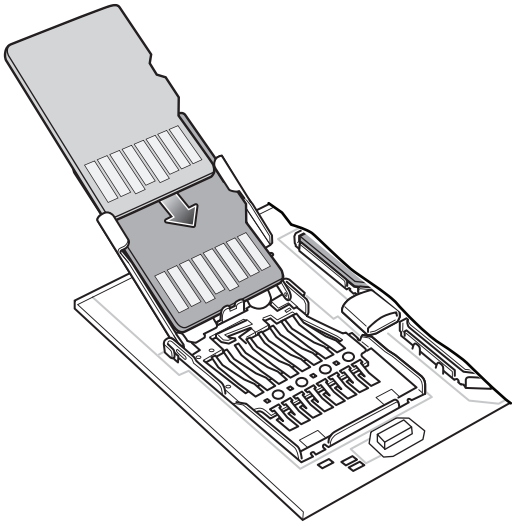

6. Close the microSD card holder door and slide the door to the Lock position.

Figure 11 Close and Lock microSD Card in Holder

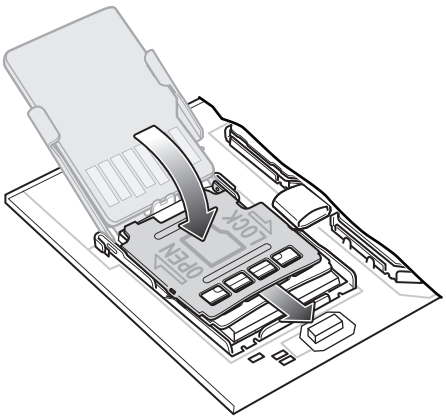

7. Re-install the access door.

REVIEW ONLY - REVIEW ONLY - REVIEW ONLY

Figure 12 Replace Access Door

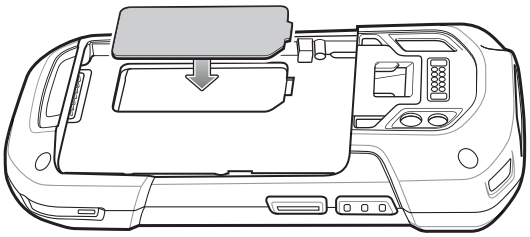

CAUTION: Access door must be replaced and securely seated to ensure proper device sealing.

Installing the Hand Strap and Battery

NOTE: Installation of the hand strap is optional. Skip this section if not installing the hand strap.

1. Remove the hand strap filler from the hand strap slot. Store the hand strap filler in a safe place for future replacement.

Figure 13 Remove Filler

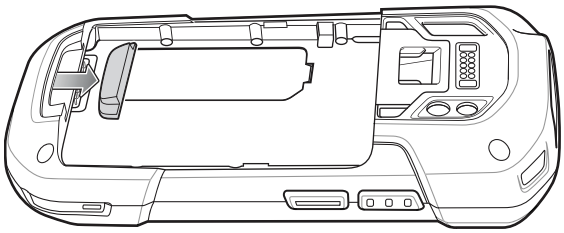

2. Insert the hand strap plate into the hand strap slot.

Figure 14 Insert Hand Strap

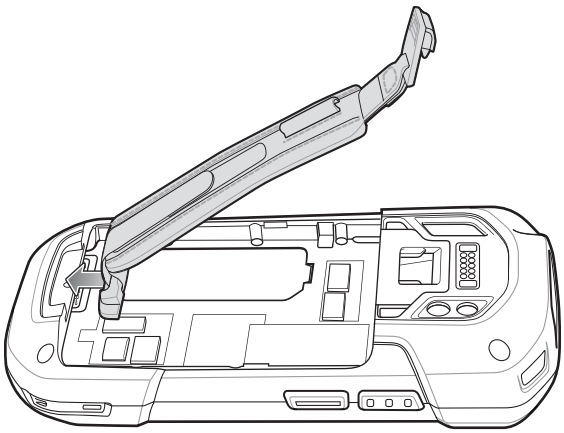

3. Insert the battery, bottom first, into the battery compartment in the back of the device.

REVIEW ONLY - REVIEW ONLY - REVIEW ONLY

Figure 15 Insert Bottom of Battery into Battery Compartment

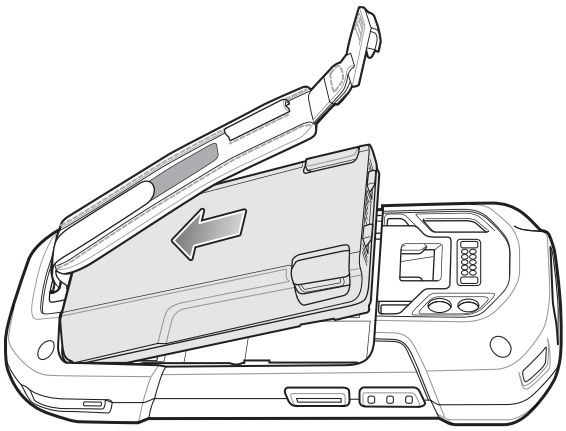

4. Press the battery down into the battery compartment until the battery release latches snap into place.

Figure 16 Press Down on Battery

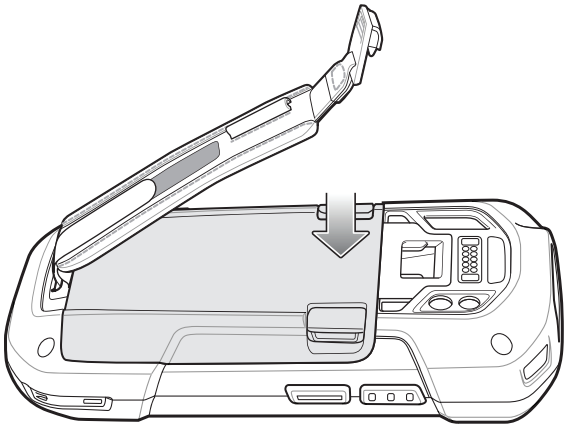

5. Place hand strap clip into hand strap mounting slot and pull down until it snaps into place.

Figure 17 Secure Hand Strap Clip

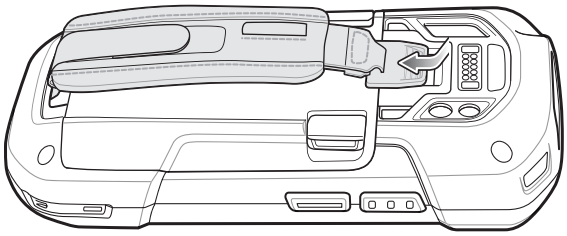

Installing the Battery

1. Insert the battery, bottom first, into the battery compartment in the back of the device.

REVIEW ONLY - REVIEW ONLY - REVIEW ONLY

Figure 18 Insert Bottom of Battery into Battery Compartment

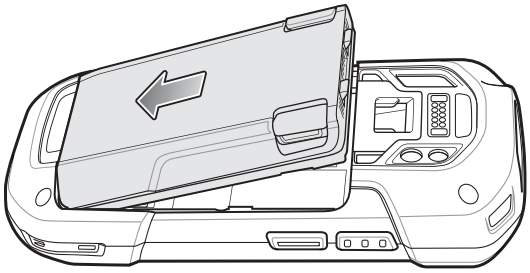

2. Press the battery down into the battery compartment until the battery release latches snap into place.

Figure 19 Press Down on Battery

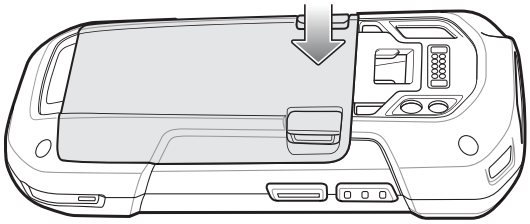

REVIEW ONLY - REVIEW ONLY - REVIEW ONLY

Charging the Device

Use one of the following accessories to charge the device and/or spare battery.

Table 1 Charging and Communication

Description	Part Number	Charging		Communication	
		Battery (In Device)	Spare Battery	USB	Ethernet
2-Slot Charge Only Cradle	CRD-TC7X-SE 2CPP-01	Yes	Yes	Yes	No
2-Slot USB/Ethernet Cradle	CRD-TC7X-SE 2EPP-01	Yes	Yes	Yes	Yes
5-Slot Charge Only Cradle	CRD-TC7X-SE 5C1-01	Yes	No	No	No
4-Slot Charge Only Cradle with Battery Charger	CRD-TC7X-SE 5KPP-01	Yes	Yes	No	No
5-Slot Ethernet Cradle	CRD-TC7X-SE 5EU1–01	Yes	No	No	Yes
4-Slot Spare Battery Charger	SAC-TC7X-4B TYPP-01	No	Yes	No	No
Snap-On USB Cable	CBL-TC7X-CB L1-01	Yes	No	Yes	No
Charging Cable Cup	CHG-TC7X-CL A1-01	Yes	No	No	No

Charging the TC72/TC77

NOTE: Ensure that you follow the guidelines for battery safety described in the device User Guide.

1. Insert the device into the charging slot or connect the USB Charge cable to the device.
2. Ensure the device is seated properly.

   The Notification/Charge LED lights amber while charging, then turns solid green when fully charged. See Table 2 for charging indicators.

   The 4,620 mAh battery fully charges in less than five hours at room temperature.

REVIEW ONLY - REVIEW ONLY - REVIEW ONLY

Table 2 Charging/Notification LED Charging Indicators

State	Indication
Off	The device is not charging. The device is not inserted correctly in the cradle or connected to a power source. Charger/cradle is not powered.
Slow Blinking Amber (1 blink every 4 seconds)	The device is charging.
Solid Green	Charging complete.
Fast Blinking Amber (2 blinks/second)	Charging error, e.g.: Temperature is too low or too high. Charging has gone on too long without completion (typically eight hours).
Slow Blinking Red (1 blink every 4 seconds)	The device is charging but the battery is at end of useful life.
Solid Red	Charging complete but the battery is at end of useful life.
Fast Blinking Red (2 blinks/second)	Charging error but the battery is at end of useful life., e.g.: Temperature is too low or too high. Charging has gone on too long without completion (typically eight hours).

Charging the Spare Battery

1. Insert a spare battery into the spare battery slot.
2. Ensure the battery is seated properly.
   The Spare Battery Charging LED blinks indicating charging. See Table 3 for charging indicators.

The 4,620 mAh battery fully charges in less than five hours at room temperature.

Table 3 Spare Battery Charging LED Indicators

State	Indication
Off	The battery is not charging. The battery is not inserted correctly in the cradle or connected to a power source. Cradle is not powered.
Solid Amber	Battery is charging.
Solid Green	Battery charging is complete.
Fast Blinking Red (2 blinks/second)	Charging error, e.g.: - Temperature is too low or too high. - Charging has gone on too long without completion (typically eight hours).
Solid Red	Unhealthy battery is charging or fully charged.

Charge batteries in temperatures from 0°C to 40°C (32°F to 104°F). The device or cradle always performs battery charging in a safe and intelligent manner. At higher temperatures (e.g. approximately +37°C (+98°F)) the device or cradle may for small periods of time alternately enable and disable battery charging to keep the

REVIEW ONLY - REVIEW ONLY - REVIEW ONLY

battery at acceptable temperatures. The device and cradle indicates when charging is disabled due to abnormal temperatures via its LED.

2-Slot Charging Only Cradle

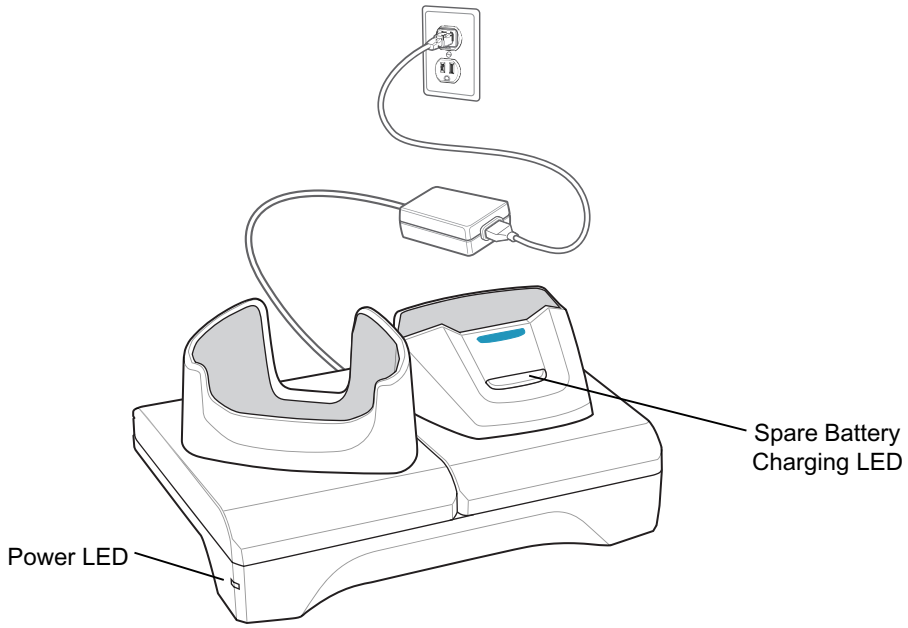

2-Slot USB/Ethernet Cradle

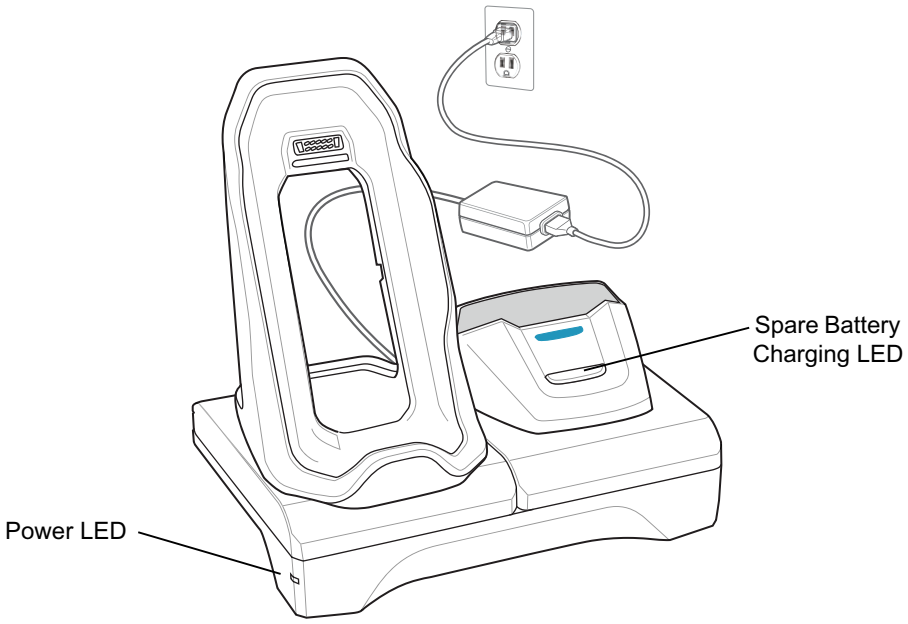

REVIEW ONLY - REVIEW ONLY - REVIEW ONLY

5-Slot Charge Only Cradle

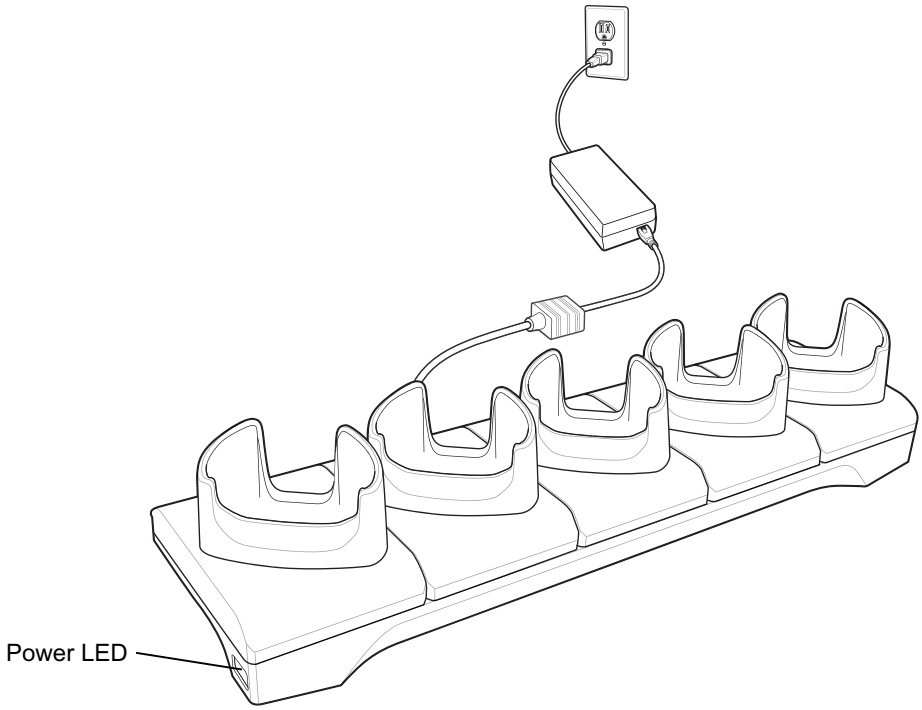

REVIEW ONLY - REVIEW ONLY - REVIEW ONLY

5-Slot Ethernet Cradle

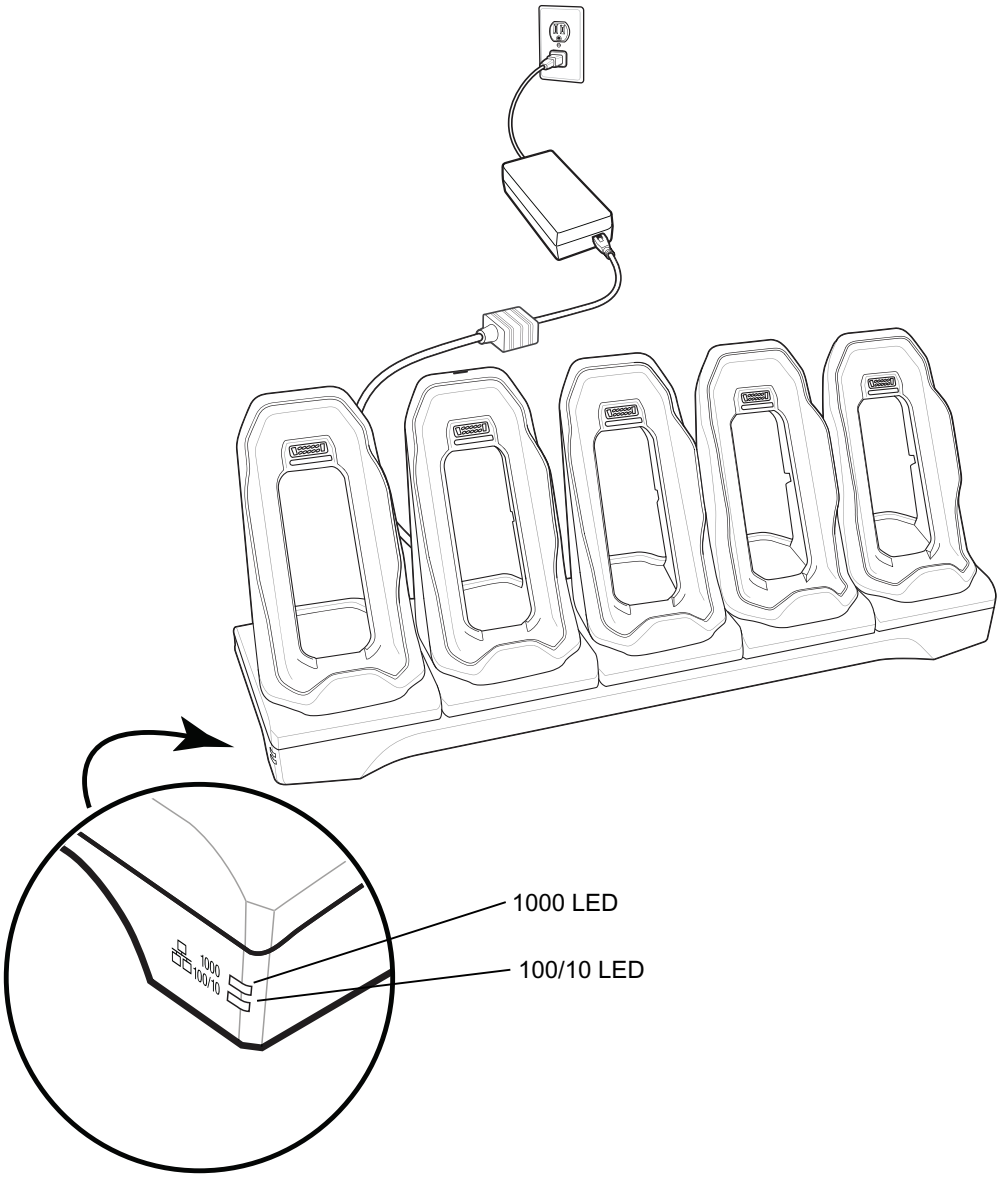

REVIEW ONLY - REVIEW ONLY - REVIEW ONLY

4-Slot Battery Charger

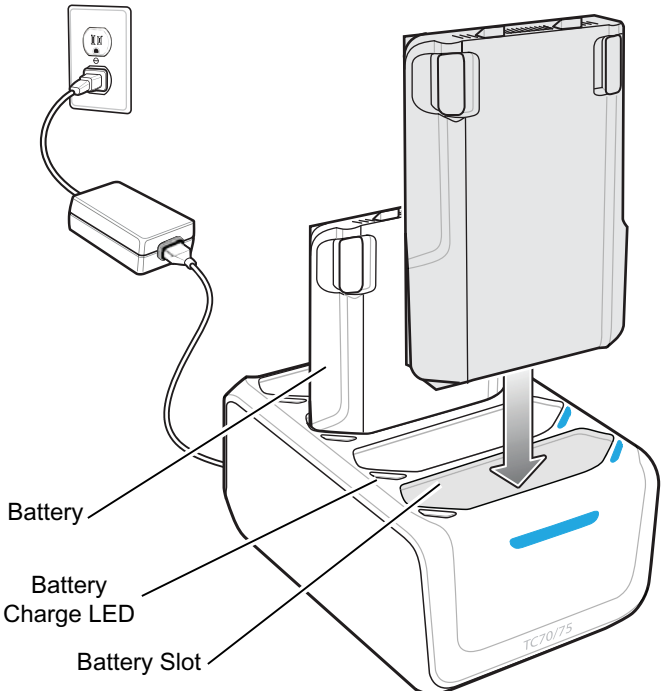

Snap-On USB Cable

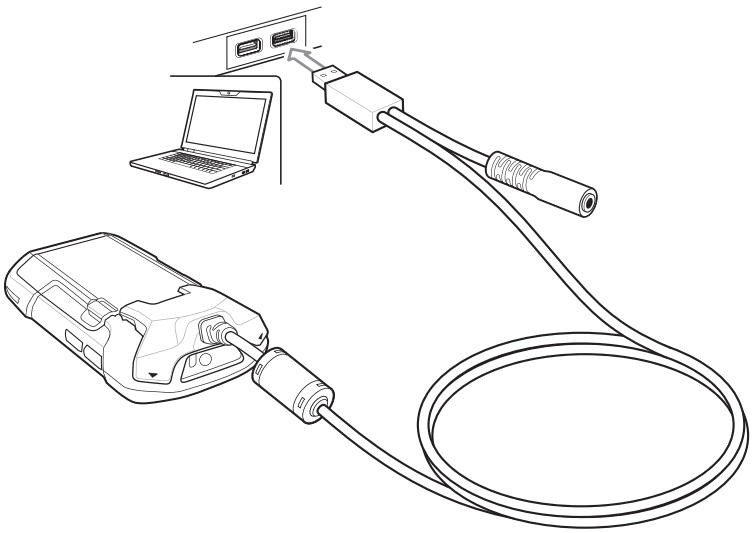

Imager Scanning

To read a bar code, a scan-enabled application is required. The device contains the DataWedge application that allows the user to enable the imager, decode the bar code data and display the bar code content.

REVIEW ONLY - REVIEW ONLY - REVIEW ONLY

1. Ensure that an application is open on the device and a text field is in focus (text cursor in text field).
2. Point the exit window on the top of the device at a bar code.

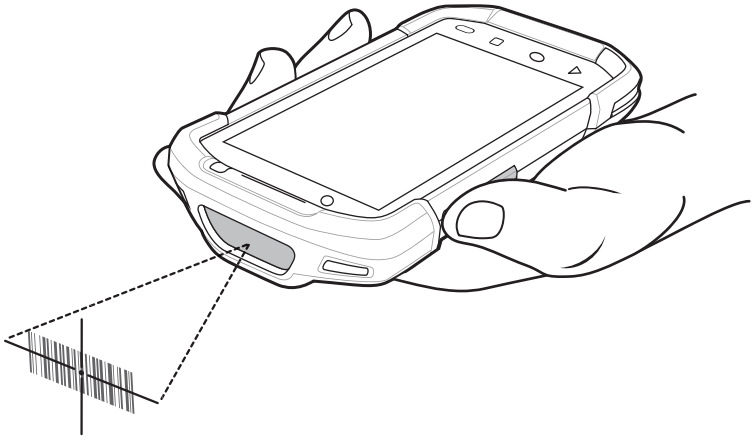

3. Press and hold the scan button.

   The red laser aiming pattern turns on to assist in aiming.

NOTE: When the device is in Picklist mode, the imager does not decode the bar code until the crosshair or aiming dot touches the bar code.

4. Ensure the bar code is within the area formed by the crosshairs in the aiming pattern. The aiming dot is used for increased visibility in bright lighting conditions.

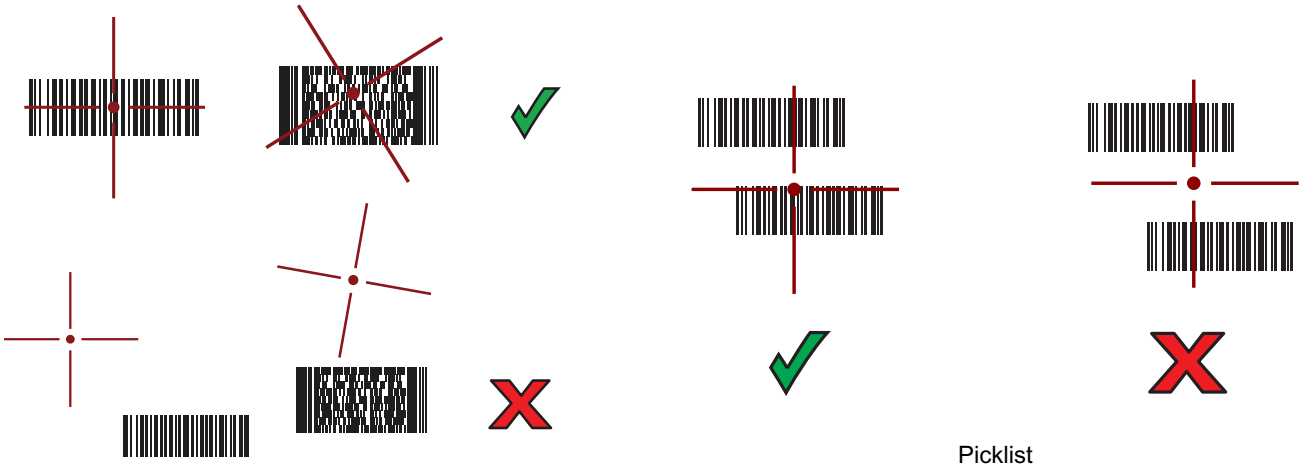

5. The Data Capture LED lights green and a beep sounds, by default, to indicate the bar code was decoded successfully.
6. Release the scan button.

NOTE: Imager decoding usually occurs instantaneously. The device repeats the steps required to take a digital picture (image) of a poor or difficult bar code as long as the scan button remains pressed.

7. The bar code content data displays in the text field.

REVIEW ONLY - REVIEW ONLY - REVIEW ONLY

REVIEW ONLY - REVIEW ONLY - REVIEW ONLY