# HEARING AID COMPATIBILITY RF EMISSIONS TEST REPORT

**FCC ID** : UZ7WCMTA
**Equipment** : Touch Computer
**Brand Name** : Zebra
**Model Name** : WCMTA
**M-Rating** : M3
**Applicant** : Zebra Technologies Corporation
1 Zebra Plaza, Holtsville, NY 11742
**Manufacturer** : Zebra Technologies Corporation
1 Zebra Plaza, Holtsville, NY 11742
**Standard** : FCC 47 CFR §20.19
ANSI C63.19-2011

**We, Sporton International Inc. (Kunshan), would like to declare that the tested sample has been evaluated in accordance with the test procedures and has been in compliance with the applicable technical standards.**

**The test results in this report apply exclusively to the tested model / sample. Without written approval of Sporton International Inc. (Kunshan), the test report shall not be reproduced except in full.**

Si Zhang

**Approved by: Si Zhang**

ACCREDITED
Cert #5145.02

***Sporton International Inc. (Kunshan)***
***No. 1098, Pengxi North Road, Kunshan Economic Development Zone Jiangsu Province 215300 People's Republic of China***

# Table of Contents


1. General Information ..... 4
2. Testing Location ..... 6
3. Applied Standards ..... 6
4. RF Audio Interference Level ..... 6
5. Air Interface and Operating Mode ..... 7
6. Measurement System Specification ..... 9
   6.1 E-Field Probe System ..... 9
   6.2 Data Storage and Evaluation ..... 10
7. RF Emissions Test Procedure ..... 11
8. Test Equipment List ..... 14
9. Measurement System Validation ..... 15
10. Modulation Interference Factor ..... 16
11. Low-power Exemption ..... 17
12. Conducted RF Output Power (Unit: dBm) ..... 22
13. HAC RF Emission Test Results ..... 24
14. Uncertainty Assessment ..... 25
15. References ..... 27

Appendix A. Plots of System Performance Check
Appendix B. Plots of RF Emission Measurement
Appendix C. DASY Calibration Certificate
Appendix D. Test Setup Photos
Appendix E. UID specifications for HAC RFE

# History of this test report

| Report No. | Version | Description | Issued Date |
|---|---|---|---|
| HA311602A | Rev. 01 | Initial issue of report | May 06, 2023 |
| | | | |
| | | | |

# 1. General Information

| Product Feature & Specification | |
|---|---|
| Applicant Name | Zebra Technologies Corporation |
| Equipment Name | Touch Computer |
| Brand Name | Zebra |
| Model Name | WCMTA |
| IMEI Code | Sample 1:<br>IMEI 1: 356466670001034<br>IMEI 2: 350859340001036<br>Sample 2:<br>IMEI 1: 356466670001406<br>IMEI 2: 350859340001408 |
| FCC ID | UZ7WCMTA |
| HW | DV |
| SW | 13-09-09.00-TG-U00-PRD-ATH-04 |
| EUT Stage | Identical Prototype |
| Date Tested | 2023/3/28 ~ 2023/3/29 |
| Frequency Band | WCDMA Band II: 1850 MHz ~ 1910 MHz<br>WCDMA Band IV: 1710 MHz ~ 1755 MHz<br>WCDMA Band V: 824 MHz ~ 849 MHz<br>LTE Band 2: 1850 MHz ~ 1910 MHz<br>LTE Band 4: 1710 MHz ~ 1755 MHz<br>LTE Band 5: 824 MHz ~ 849 MHz<br>LTE Band 7: 2500 MHz ~ 2570 MHz<br>LTE Band 12: 699 MHz ~ 716 MHz<br>LTE Band 13: 777 MHz ~ 787 MHz<br>LTE Band 14: 788 MHz ~ 798 MHz<br>LTE Band 17: 704 MHz ~ 716 MHz<br>LTE Band 25: 1850 MHz ~ 1915 MHz<br>LTE Band 26: 814 MHz ~ 849 MHz<br>LTE Band 38: 2570 MHz ~ 2620 MHz<br>LTE Band 41: 2496 MHz ~ 2690 MHz<br>LTE Band 48: 3550 MHz ~ 3700 MHz<br>LTE Band 66: 1710 MHz ~ 1780 MHz<br>LTE Band 71: 663 MHz ~ 698 MHz<br>5G NR n2 : 1850 MHz ~ 1910 MHz<br>5G NR n5: 824 MHz ~ 849 MHz<br>5G NR n7: 2500 MHz ~ 2570 MHz<br>5G NR n12 : 699 MHz ~ 716 MHz<br>5G NR n13 : 777 MHz ~ 787 MHz<br>5G NR n14 : 788 MHz ~ 798 MHz<br>5G NR n25 : 1850 MHz ~ 1915 MHz<br>5G NR n26 : 814 MHz ~ 849 MHz<br>5G NR n66: 1710 MHz ~ 1780 MHz<br>5G NR n71 : 663 MHz ~ 698 MHz<br>5G NR n38 : 2570 MHz ~ 2620 MHz<br>5G NR n41 : 2496 MHz ~ 2690 MHz<br>5G NR n48 : 3550 MHz ~ 3700 MHz<br>5G NR n77: 3450 MHz ~ 3550 MHz, 3700 MHz ~ 3980 MHz<br>WLAN 2.4GHz Band: 2412 MHz ~ 2462 MHz<br>WLAN 5.2GHz Band: 5180 MHz ~ 5240 MHz<br>WLAN 5.3GHz Band: 5260 MHz ~ 5320 MHz<br>WLAN 5.5GHz Band: 5500 MHz ~ 5720 MHz<br>WLAN 5.8GHz Band: 5745 MHz ~ 5825 MHz<br>WLAN 6GHz U-NII-5: 5925 MHz ~ 6425 MHz<br>WLAN 6GHz U-NII-6: 6425 MHz ~ 6525 MHz<br>WLAN 6GHz U-NII-7: 6525 MHz ~ 6875 MHz<br>WLAN 6GHz U-NII-8: 6875 MHz ~ 7125 MHz<br>Bluetooth: 2402 MHz ~ 2480 MHz<br>NFC: 13.56 MHz |
| Mode | RMC/AMR 12.2Kbps<br>HSDPA<br>HSUPA<br>DC-HSDPA<br>HSPA+(16QAM uplink is not supported)<br>LTE: QPSK, 16QAM, 64QAM, 256QAM |

| | |
|---|---|
| | 5G NR : CP-OFDM / DFT-s-OFDM, PI/2 BPSK, QPSK, 16QAM, 64QAM, 256QAM<br>WLAN 2.4GHz 802.11b/g/n HT20/HT40<br>WLAN 2.4GHz 802.11 ac/ax VHT20/VHT40/HE20/HE40<br>WLAN 5GHz 802.11a/n HT20/HT40<br>WLAN 5GHz 802.11ac/ax VHT20/VHT40/VHT80/VHT160/HE20/HE40/HE80/HE160<br>WLAN 6GHz 802.11a<br>WLAN 6GHz 802.11ax HE20/HE40/HE80/HE160<br>Bluetooth BR/EDR/LE<br>NFC: ASK |

**Remark:**

1. This device has three batteries, for battery1 and battery2 is same capacity, but battery 2 has BLE Beacon function, and for battery1/2 and battery 3 capacity is different and When they matched holster with device, the thickness is different. According to the difference, we only chose battery 1 to perform full testing, and battery 2/3 spot check worse of battery 1.
2. Bluetooth LE is meant to ensure beacons are sent when the battery 2 is out of power and cannot be transmitted simultaneously with other wireless modes.
3. There are two samples, the main differences between them are the scanner and memory. According to the differences, we choose sample 1 to perform full testing and sample 2 to verify the worst case of sample 1.

| Specification of Accessory | | | | |
|---|---|---|---|---|
| **Battery1<br>Standard Battery (3800mAh)** | **Brand Name** | Zebra | **Model Number** | BT-000473 |

| Supported Unit Used in Test Configuration and System | | | | |
|---|---|---|---|---|
| **Battery2<br>Standard BLE Beacon Battery (3800mAh)** | **Brand Name** | Zebra | **Model Number** | BT-000473B |
| **Battery3<br>Extended Battery (5200mAh)** | **Brand Name** | Zebra | **Model Number** | BT-000473E |
| **AC Adapter** | **Brand Name** | Zebra | **Part Number** | PWR-WUA5V12W0US |
| **Earphone 1** | **Brand Name** | Zebra | **Part Number** | HDST-35MM-PTT1-01 |
| **Earphone 2** | **Brand Name** | Zebra | **Part Number** | HDST-USBC-PTT1-01 |
| **USB Cable<br>(Type C to Type A)** | **Brand Name** | Zebra | **Part Number** | CBL-TC5X-USBC2A-01 |
| **Type C-Audio Cable<br>(Type C to 3.5mm)** | **Brand Name** | Zebra | **Part Number** | ADP-USBC-35MM1-01 |
| **Trigger Handle** | **Brand Name** | Zebra | **Part Number** | TRG-TC2L-SNP1-01 |
| **Hand Strap** | **Brand Name** | Zebra | **Part Number** | SG-TC2L-HSTRP1-01 |
| **Soft Holster** | **Brand Name** | Zebra | **Part Number** | SG-TC2L-HLSTR1-01 |

## 2. Testing Location

Sporton International Inc. (Kunshan) is accredited to ISO/IEC 17025:2017 by American Association for Laboratory Accreditation with Certificate Number 5145.02.

| Testing Laboratory | | | |
|---|---|---|---|
| Test Firm | Sporton International Inc. (Kunshan) | | |
| Test Site Location | No. 1098, Pengxi North Road, Kunshan Economic Development Zone<br>Jiangsu Province 215300 People's Republic of China<br>TEL : +86-512-57900158<br>FAX : +86-512-57900958 | | |
| Test Site No. | Sporton Site No. | FCC Designation No. | FCC Test Firm Registration No. |
| | SAR01-KS | CN1257 | 314309 |

## 3. Applied Standards

- FCC CFR47 Part 20.19
- ANSI C63.19-2011
- FCC KDB 285076 D01 HAC Guidance v06r02
- FCC KDB 285076 D03 HAC FAQ v01r06

## 4. RF Audio Interference Level

FCC wireless hearing aid compatibility rules ensure that consumers with hearing loss are able to access wireless communications services through a wide selection of handsets without experiencing disabling radio frequency (RF) interference or other technical obstacles.
To define and measure the hearing aid compatibility of handsets, in CFR47 part 20.19 ANSI C63.19 is referenced. A handset is considered hearing aid-compatible for acoustic coupling if it meets a rating of at least M3 under ANSI C63.19, and A handset is considered hearing aid compatible for inductive coupling if it meets a rating of at least T3. According to ANSI C63.19 2011 version, for acoustic coupling, the RF electric field emissions of wireless communication devices should be measured and rated according to the emission level as below.

| Emission Categories | E-field emissions | |
|---|---|---|
| | <960Mhz | >960Mhz |
| M1 | 50 to 55 dB (V/m) | 40 to 45 dB (V/m) |
| M2 | 45 to 50 dB (V/m) | 35 to 40 dB (V/m) |
| M3 | 40 to 45 dB (V/m) | 30 to 35 dB (V/m) |
| M4 | <40 dB (V/m) | <30 dB (V/m) |

**Table 4.1 Telephone near-field categories in linear units**

## 5. Air Interface and Operating Mode

| Air Interface | Band MHz | Type | C63.19 Tested | Simultaneous Transmitter | Name of Voice Service | Power Reduction |
|---|---|---|---|---|---|---|
| WCDMA | Band II | VO | No(1) | WLAN, BT | CMRS Voice | No |
| | Band IV | | | WLAN, BT | | No |
| | Band V | | | WLAN, BT | | No |
| | HSPA | VD | No(1) | WLAN, BT | WFC / Google Duo | No |
| LTE (FDD) | Band 2 | VD | No(1) | 5G NR, WLAN, BT | VoLTE / WFC / Google Duo | No |
| | Band 4 | | | 5G NR, WLAN, BT | | No |
| | Band 5 | | | 5G NR, WLAN, BT | | No |
| | Band 7 | | | 5G NR, WLAN, BT | | No |
| | Band 12 | | | 5G NR, WLAN, BT | | No |
| | Band 13 | | | 5G NR, WLAN, BT | | No |
| | Band 14 | | | 5G NR, WLAN, BT | | No |
| | Band 17 | | | 5G NR, WLAN, BT | | No |
| | Band 25 | | | 5G NR, WLAN, BT | | No |
| | Band 26 | | | 5G NR, WLAN, BT | | No |
| | Band 66 | | | 5G NR, WLAN, BT | | No |
| | Band 71 | | | 5G NR, WLAN, BT | | No |
| LTE (TDD) | Band 38 | VD | Yes | 5G NR, WLAN, BT | VoLTE / WFC / Google Duo | No |
| | Band 41 | | | 5G NR, WLAN, BT | | No |
| | Band 48 | | Yes | 5G NR, WLAN, BT | | No |
| 5G NR (FDD) | n2 | VD | No(1) | LTE, WLAN, BT | VoNR / WFC / Google Duo | No |
| | n5 | | | LTE, WLAN, BT | | No |
| | n7 | | | LTE, WLAN, BT | | No |
| | n12 | | | LTE, WLAN, BT | | No |
| | n13 | | | LTE, WLAN, BT | | No |
| | n14 | | | LTE, WLAN, BT | | No |
| | n25 | | | LTE, WLAN, BT | | No |
| | n26 | | | LTE, WLAN, BT | | No |
| | n66 | | | LTE, WLAN, BT | | No |
| | n71 | | | LTE, WLAN, BT | | No |
| 5G NR (TDD) | n38 | VD | No(1) | LTE, WLAN, BT | VoNR / WFC / Google Duo | No |
| | n41 | | | LTE, WLAN, BT | | No |
| | n48 | | | LTE, WLAN, BT | | No |
| | n77 | | | LTE, WLAN, BT | | No |
| Wi-Fi | 2450 | VD | Yes | WCDMA,LTE,5G NR, BT, WLAN 5GHz, WLAN 6GHz | VoWiFi / WFC / Google Duo | No |
| | 5200 | VD | Yes | WCDMA,LTE,5G NR, BT, WLAN 2.4GHz | | No |
| | 5300 | | | WCDMA,LTE,5G NR, BT, WLAN 2.4GHz | | No |
| | 5500 | | | WCDMA,LTE,5G NR, BT, WLAN 2.4GHz | | No |
| | 5800 | | | WCDMA,LTE,5G NR, BT, WLAN 2.4GHz | | No |
| | U-NII-5 | VD | No(3) | WCDMA,LTE,5G NR, BT, WLAN 2.4GHz | VoWiFi / Google Duo | No |
| | U-NII-6 | | No(3) | WCDMA,LTE,5G NR, BT, WLAN 2.4GHz | | No |

| | | | | | | |
|---|---|---|---|---|---|---|
| | U-NII-7 | | | WCDMA,LTE,5G NR, BT, WLAN 2.4GHz | | No |
| | U-NII-8 | | | WCDMA,LTE,5G NR, BT, WLAN 2.4GHz | | No |
| BT | 2450 | DT | No | WCDMA,LTE,5G NR, WLAN 2.4GHz, WLAN 5GHz, WLAN 6GHz | NA | No |

Type Transport:
VO= Voice only
DT= Digital Transport only (no voice)
VD= CMRS and IP Voice Service over Digital Transport

Remark:
1. The air interface is exempted from testing by low power exemption that its average antenna input power plus its MIF is ≤17 dBm, and is rated as M4.
2. The device have similar frequency in some LTE bands: LTE B38/41, since the supported frequency spans for the smaller LTE bands are completely cover by the larger LTE bands, therefore, only larger LTE bands were required to be tested for hearing-aid compliance.
3. The UNII-5 was evaluated for operations which are entirely below 6 GHz, above 6 GHz were not evaluated due outside of the current scope of ANSI C63.19 and FCC HAC regulations. The U-NII 6/7/8 were above 6GHz and were not evaluated due to outside of the current scope of ANSI C63.19 and FCC HAC regulations.
4. The Workforce Connect (WFC) is an over-the-top (OTT) – voice services operating over IP, and this voice application was development and pre-installed on a wireless handset by the Zebra Technologies Corporation

# 6. Measurement System Specification

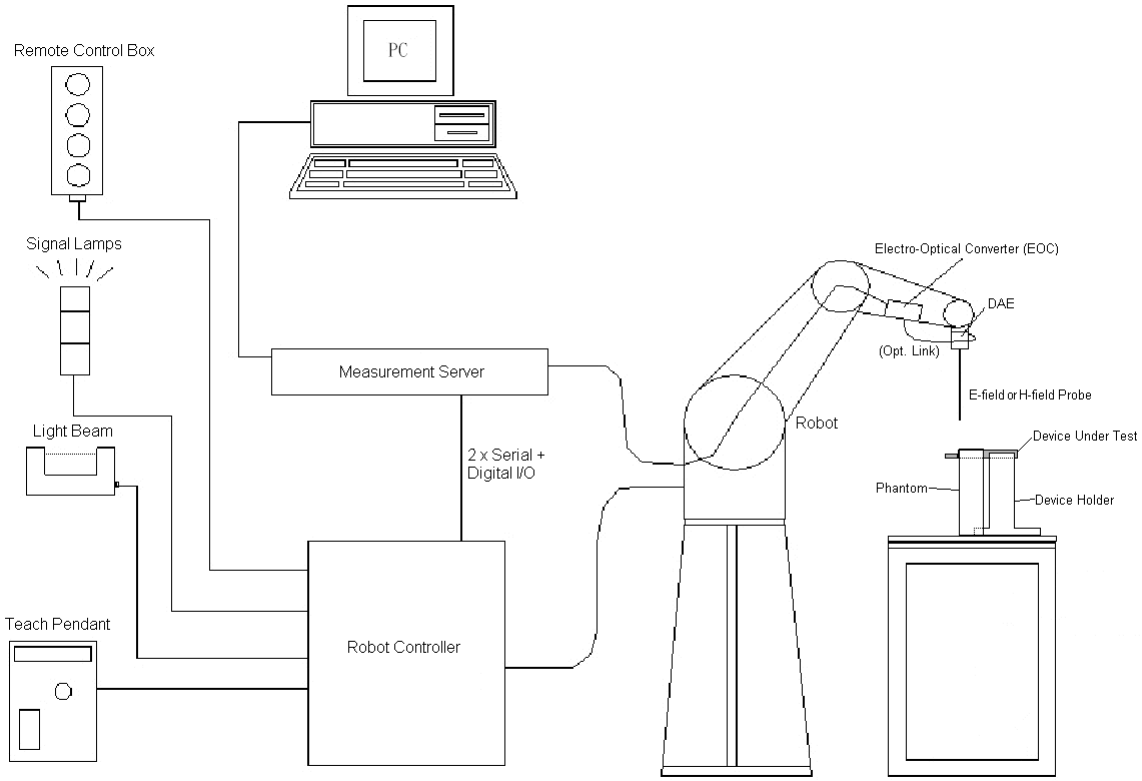


**Fig 6.1 System Configurations**

## 6.1 E-Field Probe System

**E-Field Probe Specification**
**<EF3DV3>**

| | |
|---|---|
| **Construction** | One dipole parallel, two dipoles normal to probe axis<br>Built-in shielding against static charges |
| **Calibration** | In air from 30 MHz to 6.0 GHz<br>(absolute accuracy ±6.0%, k=2) |
| **Frequency** | 30 MHz to 6 GHz;<br>Linearity: ± 2.0 dB (100 MHz to 3 GHz) |
| **Directivity** | ± 0.2 dB in air (rotation around probe axis)<br>± 0.4 dB in air (rotation normal to probe axis) |
| **Dynamic Range** | 2 V/m to 1000 V/m<br>(M3 or better device readings fall well below diode compression point) |
| **Linearity** | ± 0.2 dB |
| **Dimensions** | Overall length: 337 mm (Tip: 20 mm)<br>Tip diameter: 4 mm (Body: 12 mm)<br>Distance from probe tip to dipole centers: 1.5 mm |

**Photo of E-field Probe**

**Probe Tip Description:**
HAC field measurements take place in the close near field with high gradients. Increasing the measuring distance from the source will generally decrease the measured field values (in case of the validation dipole approx. 10%per mm).

## 6.2 Data Storage and Evaluation

The DASY software stores the assessed data from the data acquisition electronics as raw data (in microvolt readings from the probe sensors), together with all the necessary software parameters for the data evaluation (probe calibration data, and device frequency and modulation data) in measurement files.

| | | |
|---|---|---|
| **Probe parameters** : | - Sensitivity | $Norm_i$, $a_{i0}$, $a_{i1}$, $a_{i2}$ |
| | - Conversion factor | $ConvF_i$ |
| | - Diode compression point | $dcp_i$ |
| **Device parameters** : | - Frequency | f |
| | - Crest factor | cf |
| **Media parameters** : | - Conductivity | σ |
| | - Density | ρ |

The formula for each channel can be given as :

$$\mathbf{V_i = U_i + U_i^2 \cdot \frac{cf}{dcp_i}}$$

with $V_i$ = compensated signal of channel i, (i = x, y, z)
$U_i$ = input signal of channel i, (i = x, y, z)
cf = crest factor of exciting field (DASY parameter)
$dcp_i$ = diode compression point (DASY parameter)

From the compensated input signals, the primary field data for each channel can be evaluated :

E-field Probes : $\mathbf{E_i = \sqrt{\frac{V_i}{Norm_i \cdot ConvF}}}$

with $V_i$ = compensated signal of channel i, (i = x, y, z)
$Norm_i$ = sensor sensitivity of channel i, (i = x, y, z), $\mu V/(V/m)^2$ for E-field Probes
ConvF = sensitivity enhancement in solution
f = carrier frequency [GHz]
$E_i$ = electric field strength of channel i in V/m

The RSS value of the field components gives the total field strength (Hermitian magnitude) :

$$\mathbf{E_{tot} = \sqrt{E_x^2 + E_y^2 + E_z^2}}$$

The primary field data are used to calculate the derived field units.

# 7. RF Emissions Test Procedure

Referenced from ANSI C63.19 -2011 section 5.5.1

a. Confirm the proper operation of the field probe, probe measurement system, and other instrumentation and the positioning system.
b. Position the WD in its intended test position.
c. Set the WD to transmit a fixed and repeatable combination of signal power and modulation characteristic that is representative of the worst case (highest interference potential) encountered in normal use. Transiently occurring start-up, changeover, or termination conditions, or other operations likely to occur less than 1% of the time during normal operation, may be excluded from consideration.
d. The center sub-grid shall be centered on the T-Coil mode perpendicular measurement point or the acoustic output, as appropriate. Locate the field probe at the initial test position in the 50 mm by 50 mm grid, which is contained in the measurement plane, refer to illustrated in Figure 8.2. If the field alignment method is used, align the probe for maximum field reception.
e. Record the reading at the output of the measurement system.
f. Scan the entire 50 mm by 50 mm region in equality spaced increments and record the reading at each measurement point, The distance between measurement points shall be sufficient to assure the identification of the maximum reading.
g. Identify the five contiguous sub-grids around the center sub-grid whose maximum reading is the lowest of all available choices. This eliminates the three sub-grids with the maximum readings. Thus, the six areas to be used to determine the WD's highest emissions are identified.
h. Identify the maximum reading within the non-excluded sub-grids identified in step g).
i. Indirect measurement method
j. The RF audio interference level in dB (V/m) is obtained by adding the MIF (in dB) to the maximum steady-state rms field-strength reading, in dB (V/m)
k. Compare this RF audio interference level with the categories in ANSI C63.19-2011 clause 8 and record the resulting WD category rating.
l. For the T-Coil perpendicular measurement location is ≥5.0 mm from the center of the acoustic output, then two different 50 mm by 50 mm areas may need to be scanned, the first for the microphone mode assessment and the second for the T-Coil assessment.
m. The second for the T-Coil assessment, with the grid shifted so that it is centered on the perpendicular measurement point. Record the WD category rating.

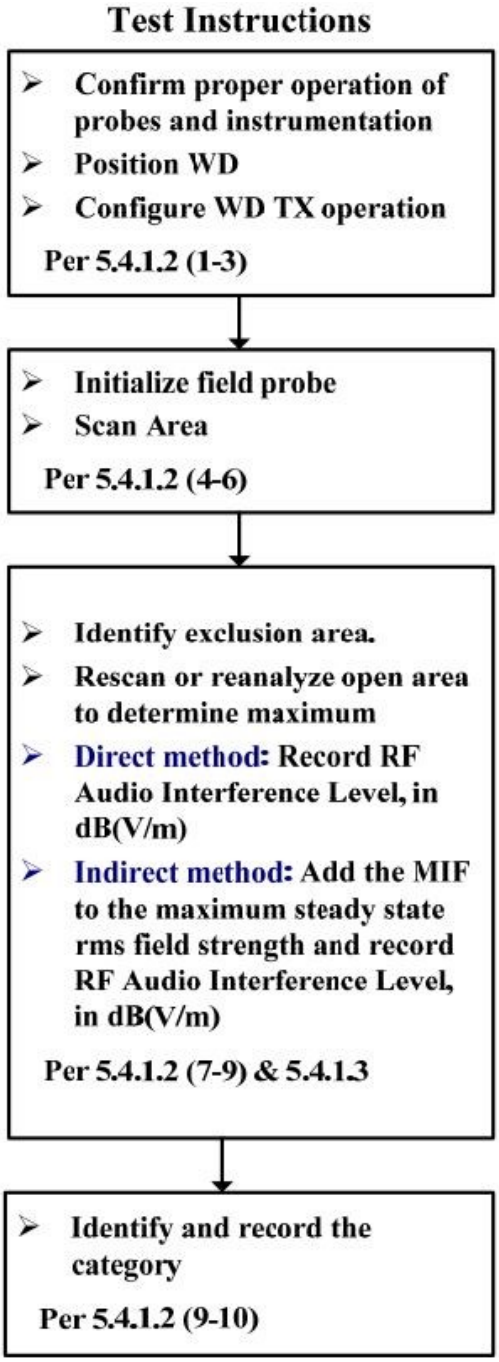


**Figure 8.1 RF Emissions Flow Chart**

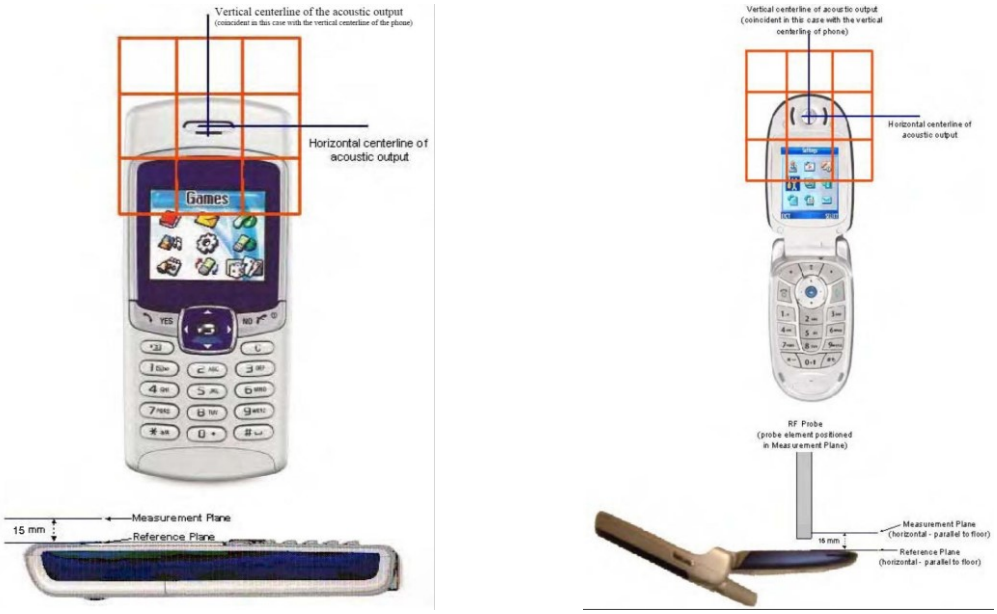


**Fig 8.2 EUT reference and plane for HAC RF emission measurements**

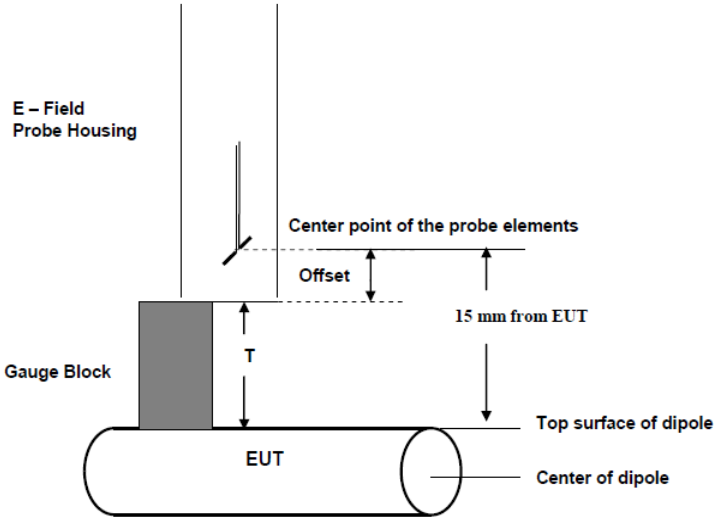


**Fig. 8.3 Gauge block with E-field probe**

# 8. Test Equipment List

| Manufacturer | Name of Equipment | Type/Model | Serial Number | Calibration | |
|---|---|---|---|---|---|
| | | | | Last Cal. | Due Date |
| SPEAG | 2450MHz Calibration Dipole | CD2450V3 | 1155 | 2021/6/16 | 2024/6/15 |
| SPEAG | 2600Mhz Calibration Dipole | CD2600V3 | 1030 | 2022/6/29 | 2023/6/28 |
| SPEAG | 3500Mhz Calibration Dipole | CD3500V3 | 1009 | 2023/3/22 | 2024/3/21 |
| SPEAG | 5500Mhz Calibration Dipole | CD5500V3 | 1012 | 2022/1/26 | 2025/1/25 |
| SPEAG | Data Acquisition Electronics | DAE4 | 1650 | 2022/8/5 | 2023/8/4 |
| SPEAG | Isotropic E-Field Probe | EF3DV3 | 4050 | 2023/1/24 | 2024/1/23 |
| R&S | Base Station | CMW500 | 143030 | 2022/7/14 | 2023/7/13 |
| Anritsu | Vector Signal Generator | MG3710A | 6201682672 | 2023/1/5 | 2024/1/4 |
| BONN | POWER AMPLIFIER | BLMA 0830-3 | 087193A | NA | NA |
| BONN | POWER AMPLIFIER | BLMA 2060-2 | 087193B | NA | NA |
| Agilent | Dual Directional Coupler | 778D | 20500 | 2022/7/14 | 2023/7/13 |
| Agilent | Dual Directional Coupler | 11691D | MY48151020 | 2022/7/14 | 2023/7/13 |
| Rohde & Schwarz | Power Meter | NRVD | 102081 | 2022/7/14 | 2023/7/13 |
| Rohde & Schwarz | Power Sensor | NRV-Z5 | 100538 | 2022/7/14 | 2023/7/13 |
| Rohde & Schwarz | Power Sensor | NRV-Z5 | 100539 | 2022/7/14 | 2023/7/13 |
| MCL | Attenuation1 | BW-S10W5+ | N/A | NA | NA |
| MCL | Attenuation2 | BW-S10W5+ | N/A | NA | NA |
| MCL | Attenuation3 | BW-S10W5+ | N/A | NA | NA |
| Rohde & Schwarz | Spectrum Analyzer | FSV7 | 101631 | 2022/10/12 | 2023/10/11 |
| Testo | Thermo-Hygrometer | 608-H1 | 1241332126 | 2023/1/5 | 2024/1/4 |

**Note:**

1. NCR: “No-Calibration Required”
2. Referring to KDB 865664 D01v01r04, the dipole calibration interval can be extended to 3 years with justification. The dipoles are also not physically damaged, or repaired during the interval.
3. The justification data of dipole can be found in appendix C. The return loss is < -20dB, within 20% of prior calibration, the impedance is within 5 ohm of prior calibration.

# 9. Measurement System Validation

Each DASY system is equipped with one or more system validation kits. These units, together with the predefined measurement procedures within the DASY software, enable the user to conduct the system performance check and system validation. System validation kit includes a dipole, tripod holder to fix it underneath the test Arch and a corresponding distance holder.
The system performance check verifies that the system operates within its specifications. System and operator errors can be detected and corrected. It is recommended that the system performance check be performed prior to any usage of the system in order to guarantee reproducible results. The system performance check uses normal HAC measurements in a simplified setup with a well characterized source. This setup was selected to give a high sensitivity to all parameters that might fail or vary over time. The system check does not intend to replace the calibration of the components, but indicates situations where the system uncertainty is exceeded due to drift or failure.

**<Test Setup>**

1. In the simplified setup for system evaluation, the EUT is replaced by a calibrated dipole and the power source is replaced by a continuous wave which comes from a signal generator.
2. The center point of the probe element(s) is 15mm from the closest surface of the dipole elements.
3. The calibrated dipole must be placed beneath the arch phantom. The equipment setup is shown below:
4. The output power on dipole port must be calibrated to 20dBm (100mW) before dipole is connected.

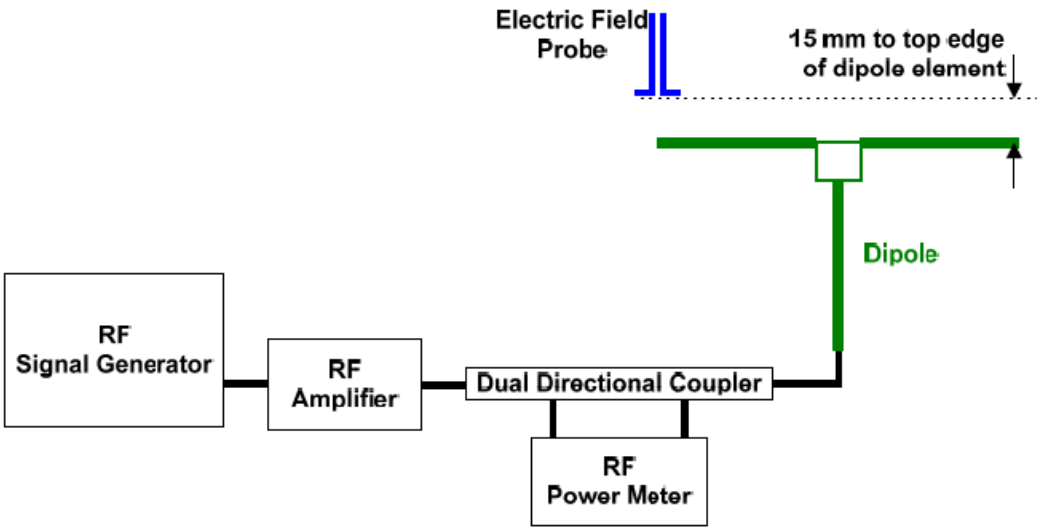


**Fig. 7.1 Setup Diagram**

**<Validation Results>**

Comparing to the original E-field value provided by SPEAG, the verification data should be within its specification of 18 %. Table 6.1 shows the target value and measured value. The table below indicates the system performance check can meet the variation criterion and the plots can be referred to appendix A of this report.
Deviation = ((Average E-field Value) - (Target value)) / (Target value) * 100%

| Frequency (MHz) | Input Power (dBm) | Target Value (V/m) | E-Field 1 (V/m) | E-Field 2 (V/m) | Average Value (V/m) | Deviation (%) | Date |
|---|---|---|---|---|---|---|---|
| 2450 | 20 | 85.1 | 94.14 | 92.52 | 93.33 | 9.67 | 2023/3/28 |
| 2600 | 20 | 86.0 | 95.89 | 95.71 | 95.8 | 11.40 | 2023/3/28 |
| 3500 | 20 | 84.0 | 92.59 | 91.73 | 92.16 | 9.71 | 2023/3/29 |
| 5500 | 20 | 100.6 | 104.3 | 102.7 | 103.5 | 2.88 | 2023/3/29 |

# 10. Modulation Interference Factor

The HAC Standard ANSI C63.19-2011 defines a new scaling using the Modulation Interference Factor (MIF).
For any specific fixed and repeatable modulated signal, a modulation interference factor (MIF, expressed in dB) may be developed that relates its interference potential to its steady-state rms signal level or average power level. This factor is a function only of the audio-frequency amplitude modulation characteristics of the signal and is the same for field-strength and conducted power measurements. It is important to emphasize that the MIF is valid only for a specific repeatable audio-frequency amplitude modulation characteristic. Any change in modulation characteristic requires determination and application of a new MIF
The Modulation Interference factor (MIF, in dB) is added to the measured average E-field (in dBV/m) and converts it to the RF Audio Interference level (in dBV/m). This level considers the audible amplitude modulation components in the RF E-field. CW fields without amplitude modulation are assumed to not interfere with the hearing aid electronics. Modulations without time slots and low fluctuations at low frequencies have low MIF values, TDMA modulations with narrow transmission and repetition rates of few 100 Hz have high MIF values and give similar classifications as ANSI C63.19-2011.
ER3D, EF3D and EU2D E-field probes have a bandwidth <10 kHz and can therefore not evaluate the RF envelope in the full audio band. DASY52 is therefore using the indirect measurement method according to ANSI C63.19-2011 which is the primary method. These near field probes read the averaged E-field measurement. Especially for the new high peak-to-average (PAR) signal types, the probes shall be linearized by PMR calibration in order to not overestimate the field reading. Probe Modulation Response (PMR) calibration linearizes the probe response over its dynamic range for specific modulations which are characterized by their UID and result in an uncertainty specified in the probe calibration certificate. The MIF is characteristic for a given waveform envelope and can be used as a constant conversion factor if the probe has been PMR calibrated.
The evaluation method for the MIF is defined in ANSI C63.19-2011 section D.7. An RMS demodulated RF signal is fed to a spectral filter (similar to an A weighting filter) and forwarded to a temporal filter acting as a quasi-peak detector. The averaged output of these filtering is scaled to a 1 kHz 80% AM signal as reference. MIF measurement requires additional instrumentation and is not well suited for evaluation by the end user with reasonable uncertainty. It may alliteratively be determined through analysis and simulation, because it is constant and characteristic for a communication signal. DASY52 uses well-defined signals for PMR calibration. The MIF of these signals has been determined by simulation and it is automatically applied.
The MIF measurement uncertainty is estimated as follows, declared by HAC equipment provider SPEAG, for modulation frequencies from slotted waveforms with fundamental frequency and at least 2 harmonics within 10 kHz:

1. 0.2 dB for MIF: -7 to +5 dB
2. 0.5 dB for MIF: -13 to +11 dB
3. 1 dB for MIF: > -20 dB

MIF values applied in this test report were provided by the HAC equipment provider of SPEAG, and the worst values for all air interface are listed below to be determine the Low-power Exemption.

| UID | Communication System Name | MIF(dB) |
|---|---|---|
| 10021 | GSM-FDD(TDMA,GMSK) | 3.63 |
| 10025 | EDGE-FDD (TDMA, 8PSK, TN 0) | 3.75 |
| 10460 | UMTS-FDD(WCDMA, AMR) | -25.43 |
| 10225 | UMTS-FDD (HSPA+) | -20.39 |
| 10170 | LTE-FDD(SC-FDMA,1RB,20MHz,16-QAM) | -9.76 |
| 10173 | LTE-TDD (SC-FDMA, 1 RB, 20 MHz, 16-QAM) | -1.44 |
| 10769 | 5G NR (CP-OFDM, 1 RB, 15 MHz, QPSK, 15 kHz) | -12.08 |
| 10061 | IEEE 802.11b WiFi 2.4 GHz (DSSS, 11 Mbps) | -2.02 |
| 10077 | IEEE 802.11g WiFi 2.4 GHz (DSSS/OFDM, 54 Mbps) | 0.12 |
| 10427 | IEEE 802.11n (HT Greeneld, 150 Mbps, 64-QAM) | -13.44 |
| 10069 | IEEE 802.11a/h WiFi 5 GHz (OFDM, 54 Mbps) | -3.15 |
| 10616 | IEEE 802.11ac WiFi (40MHz, MCS0, 90pc duty cycle) | -5.57 |
| 10671 | IEEE 802.11ax (20MHz, MCS0, 90pc duty cycle) | -5.58 |

# 11. Low-power Exemption

**<Max Tune-up Limit>**

**<Ant0>**

| Frequency Band | | Average Power (dBm) |
|---|---|---|
| WCDMA | Band V | 25.00 |
| | HSPA | 24.00 |
| FDD LTE | Band 5 | 25.00 |
| | Band 12 | 25.00 |
| | Band 13 | 25.00 |
| | Band 14 | 25.00 |
| | Band 17 | 25.00 |
| | Band 26 | 25.00 |
| | Band 71 | 25.00 |
| 5G NR FDD | n5 | 25.00 |
| | n12 | 25.00 |
| | n13 | 25.00 |
| | n14 | 25.00 |
| | n26 | 25.00 |
| | n71 | 25.00 |
| 5G NR TDD | n41 | 23.00 |
| | n77 | 21.50 |

**<Ant1>**

| Frequency Band | | Average Power (dBm) |
|---|---|---|
| FDD LTE | Band 2 | 25.00 |
| | Band 4 | 25.00 |
| | Band 25 | 25.00 |
| | Band 66 | 25.00 |
| 5G NR FDD | n2 | 25.00 |
| | n25 | 25.00 |
| | n66 | 25.00 |
| 5G NR TDD | n77 | 23.00 |

**<Ant2>**

| Frequency Band | | Average Power (dBm) |
|---|---|---|
| WCDMA | Band II | 25.00 |
| | Band IV | 25.00 |
| | HSPA | 24.00 |
| FDD LTE | Band 2 | 25.00 |
| | Band 4 | 25.00 |
| | Band 7 | 25.00 |
| | Band 25 | 25.00 |
| | Band 66 | 25.00 |
| TDD LTE | Band 38 | 25.00 |
| | Band 41 | 25.00 |
| | Band 41_HPUE | 27.00 |
| 5G NR FDD | n2 | 25.00 |
| | n7 | 25.00 |
| | n25 | 25.00 |
| | n66 | 25.00 |
| 5G NR TDD | n38 | 25.00 |
| | n41 | 24.00 |
| | n41_PC2 | 27.00 |

**<Ant3>**

| Frequency Band | | Average Power (dBm) |
|---|---|---|
| 5G NR TDD | n41 | 23.00 |

**<Ant4>**

| Frequency Band | | Average Power (dBm) |
|---|---|---|
| 5G NR TDD | n41 | 23.00 |

**<Ant5>**

| Frequency Band | | Average Power (dBm) |
|---|---|---|
| TDD LTE | Band 48 | 24.00 |
| 5G NR TDD | n48 | 24.00 |
| | n77 | 24.00 |
| | n77_PC2 | 27.00 |

**<Ant6>**

| Frequency Band | | Average Power (dBm) |
|---|---|---|
| 5G NR TDD | n77 | 23.00 |

**<WLAN Ant>**

| Frequency Band | | Average Power (dBm) |
|---|---|---|
| 2.4GHz WLAN | 802.11b | 23.80 |
| | 802.11g | 23.90 |
| | 802.11n-HT20 | 23.00 |
| | 802.11n-HT40 | 22.00 |
| | 802.11ac-VHT20 | 23.00 |
| | 802.11ac-VHT40 | 22.00 |
| | 802.11ax-HE20 | 23.00 |
| | 802.11ax-HE40 | 22.00 |
| 5GHz WLAN | 802.11a | 23.30 |
| | 802.11n-HT20 | 23.00 |
| | 802.11n-HT40 | 23.30 |
| | 802.11ac-VHT20 | 23.00 |
| | 802.11ac-VHT40 | 23.00 |
| | 802.11ac-VHT80 | 22.00 |
| | 802.11ac-VHT160 | 18.50 |
| | 802.11ax-HE20 | 23.00 |
| | 802.11ax-HE40 | 23.00 |
| | 802.11ax-HE80 | 22.00 |
| | 802.11ax-HE160 | 18.80 |
| 6GHz WLAN | 802.11a | 16.50 |
| | 802.11ax-HE20 | 16.50 |
| | 802.11ax-HE40 | 16.30 |

**<Low Power Exemption>**

**<Ant0>**

| Air Interface | Max Average Antenna Input Power (dBm) | Worst Case MIF (dB) | Power + MIF(dB) | C63.19 test required |
|---|---|---|---|---|
| WCDMA | 25.00 | -25.43 | -0.43 | No |
| WCDMA - HSPA | 24.00 | -20.39 | 3.61 | No |
| LTE - FDD | 25.00 | -9.76 | 15.24 | No |
| 5G FR1 - FDD | 25.00 | -12.08 | 12.92 | No |
| 5G NR - TDD | 23.00 | -12.08 | 10.92 | No |

**<Ant1>**

| Air Interface | Max Average Antenna Input Power (dBm) | Worst Case MIF (dB) | Power + MIF(dB) | C63.19 test required |
|---|---|---|---|---|
| LTE - FDD | 25.00 | -9.76 | 15.24 | No |
| 5G FR1 - FDD | 25.00 | -12.08 | 12.92 | No |
| 5G NR - TDD | 23.00 | -12.08 | 10.92 | No |

**<Ant2>**

| Air Interface | Max Average Antenna Input Power (dBm) | Worst Case MIF (dB) | Power + MIF(dB) | C63.19 test required |
|---|---|---|---|---|
| WCDMA | 25.00 | -25.43 | -0.43 | No |
| WCDMA - HSPA | 24.00 | -20.39 | 3.61 | No |
| LTE - FDD | 25.00 | -9.76 | 15.24 | No |
| LTE – TDD | 27.00 | -1.44 | 25.56 | Yes |
| 5G FR1 - FDD | 25.00 | -12.08 | 12.92 | No |
| 5G NR - TDD | 27.00 | -12.08 | 14.92 | No |

**<Ant3>**

| Air Interface | Max Average Antenna Input Power (dBm) | Worst Case MIF (dB) | Power + MIF(dB) | C63.19 test required |
|---|---|---|---|---|
| 5G NR - TDD | 23.00 | -12.08 | 10.92 | No |

**<Ant4>**

| Air Interface | Max Average Antenna Input Power (dBm) | Worst Case MIF (dB) | Power + MIF(dB) | C63.19 test required |
|---|---|---|---|---|
| 5G NR - TDD | 23.00 | -12.08 | 10.92 | No |

**<Ant5>**

| Air Interface | Max Average Antenna Input Power (dBm) | Worst Case MIF (dB) | Power + MIF(dB) | C63.19 test required |
|---|---|---|---|---|
| LTE – TDD | 24.00 | -1.44 | 22.56 | Yes |
| 5G NR - TDD | 27.00 | -12.08 | 14.92 | No |

**<Ant6>**

| Air Interface | Max Average Antenna Input Power (dBm) | Worst Case MIF (dB) | Power + MIF(dB) | C63.19 test required |
|---|---|---|---|---|
| 5G NR - TDD | 23.00 | -12.08 | 10.92 | No |

**<WLAN Ant>**

| Frequency Band | Air Interface | Max Average Antenna Input Power (dBm) | Worst Case MIF (dB) | Power + MIF(dB) | C63.19 test required |
|---|---|---|---|---|---|
| 2.4GHz WLAN | 802.11b | 23.80 | -2.02 | 21.78 | No(1) |
| | 802.11g | 23.90 | 0.12 | 24.02 | Yes |
| | 802.11n-HT20 | 23.00 | -13.44 | 9.56 | No |
| | 802.11n-HT40 | 22.00 | -13.44 | 8.56 | No |
| | 802.11ac-VHT20 | 23.00 | -5.57 | 17.43 | No(1) |
| | 802.11ac-VHT40 | 22.00 | -5.57 | 16.43 | No |
| | 802.11ax-HE20 | 23.00 | -5.58 | 17.42 | No(1) |
| | 802.11ax-HE40 | 22.00 | -5.58 | 16.42 | No |
| 5GHz WLAN | 802.11a | 23.30 | -3.15 | 20.15 | Yes |
| | 802.11n-HT20 | 23.00 | -13.44 | 9.56 | No |
| | 802.11n-HT40 | 23.30 | -13.44 | 9.86 | No |
| | 802.11ac-VHT20 | 23.00 | -5.57 | 17.43 | No(2) |
| | 802.11ac-VHT40 | 23.00 | -5.57 | 17.43 | No(2) |
| | 802.11ac-VHT80 | 22.00 | -5.57 | 16.43 | No |
| | 802.11ac-VHT160 | 18.50 | -5.57 | 12.93 | No |
| | 802.11ax-HE20 | 23.00 | -5.58 | 17.42 | No(2) |
| | 802.11ax-HE40 | 23.00 | -5.58 | 17.42 | No(2) |
| | 802.11ax-HE80 | 22.00 | -5.58 | 16.42 | No |
| | 802.11ax-HE160 | 18.80 | -5.58 | 13.22 | No |
| 6GHz WLAN | 802.11a | 16.50 | -3.15 | 13.35 | No |
| | 802.11ax-HE20 | 16.50 | -5.58 | 10.92 | No |
| | 802.11ax-HE40 | 16.30 | -5.58 | 10.72 | No |

**General Note:**

1. 802.11b/ac-VHT20/ax HE20 is not necessary due to the 802.11g is the worst case.
2. 802.11ac-VHT20/ac-VHT40/ax HE20/ax HE40 is not necessary due to the 802.11a is the worst case.
3. LTE Band 41 non-HPUE modes is not necessary due the LTE Band 41 HPUE mode is the worst case.
4. According to ANSI C63.19 2011-version, for the air interface technology of a device is exempt from testing when its average antenna input power plus its MIF is ≤17 dBm for any of its operating modes.
5. HAC RF rating is M4 for the air interface which meets the low power exemption.

# 12. Conducted RF Output Power (Unit: dBm)

**<LTE>**

| Band 38 ANT2 | | | | | | |
|---|---|---|---|---|---|---|
| BW [MHz] | Modulation | RB Size | RB Offset | Power Low Ch. / Freq. | Power Middle Ch. / Freq. | Power High Ch. / Freq. |
| Channel | | | | 37850 | 38000 | 38150 |
| Frequency (MHz) | | | | 2580 | 2595 | 2610 |
| 20 | QPSK | 1 | 0 | 23.79 | 23.90 | 23.88 |

| Band 41 ANT2 | | | | | | | | |
|---|---|---|---|---|---|---|---|---|
| BW [MHz] | Modulation | RB Size | RB Offset | Power Low Ch. / Freq. | Power Low Middle Ch. / Freq. | Power Middle Ch. / Freq. | Power High Middle Ch. / Freq. | Power High Ch. / Freq. |
| Channel | | | | 39750 | 40185 | 40620 | 41055 | 41490 |
| Frequency (MHz) | | | | 2506 | 2549.5 | 2593 | 2636.5 | 2680 |
| 20 | QPSK | 1 | 0 | 23.59 | 23.61 | 23.93 | 23.79 | 23.72 |

| Band 41 ANT2 HPUE | | | | | | | | |
|---|---|---|---|---|---|---|---|---|
| BW [MHz] | Modulation | RB Size | RB Offset | Power Low Ch. / Freq. | Power Low Middle Ch. / Freq. | Power Middle Ch. / Freq. | Power High Middle Ch. / Freq. | Power High Ch. / Freq. |
| Channel | | | | 39750 | 40185 | 40620 | 41055 | 41490 |
| Frequency (MHz) | | | | 2506 | 2549.5 | 2593 | 2636.5 | 2680 |
| 20 | QPSK | 1 | 0 | 25.54 | 25.56 | 25.88 | 25.70 | 25.63 |

| Band 48 ANT5 | | | | | | | |
|---|---|---|---|---|---|---|---|
| BW [MHz] | Modulation | RB Size | RB Offset | Power Low Ch. / Freq. | Power Low Middle Ch. / Freq. | Power High Middle Ch. / Freq. | Power High Ch. / Freq. |
| Channel | | | | 55340 | 55830 | 56150 | 56640 |
| Frequency (MHz) | | | | 3560 | 3609 | 3641 | 3690 |
| 20 | QPSK | 1 | 0 | 22.43 | 22.61 | 22.53 | 22.47 |

**<WLAN Ant>**

| 2.4GHz WLAN | Mode | Channel | Frequency (MHz) | Average power (dBm) |
|---|---|---|---|---|
| | 802.11g 6Mbps | 1 | 2412 | 22.27 |
| | | 6 | 2437 | 23.82 |
| | | 11 | 2462 | 20.84 |

| 5.2GHz WLAN | Mode | Channel | Frequency (MHz) | Average power (dBm) |
|---|---|---|---|---|
| | 802.11a 6Mbps | 36 | 5180 | 21.45 |
| | | 44 | 5220 | 22.67 |
| | | 48 | 5240 | 22.03 |

| 5.3GHz WLAN | Mode | Channel | Frequency (MHz) | Average power (dBm) |
|---|---|---|---|---|
| | 802.11a 6Mbps | 52 | 5260 | 22.81 |
| | | 60 | 5300 | 22.35 |
| | | 64 | 5320 | 22.04 |

| 5.5GHz WLAN | Mode | Channel | Frequency (MHz) | Average power (dBm) |
|---|---|---|---|---|
| | 802.11a 6Mbps | 100 | 5500 | 22.33 |
| | | 116 | 5580 | 22.35 |
| | | 144 | 5720 | 22.15 |

| 5.8GHz WLAN | Mode | Channel | Frequency (MHz) | Average power (dBm) |
|---|---|---|---|---|
| | 802.11a 6Mbps | 149 | 5745 | 21.73 |
| | | 157 | 5785 | 21.41 |
| | | 165 | 5825 | 21.66 |

# 13. HAC RF Emission Test Results

| Plot No. | Air Interface | Mode | Channel | Sample | Transmit Ant. | Average Antenna Input Power (dBm) | MIF | E-Field (dBV/m) | Margin to FCC M3 limit (dB) | E-Field M Rating |
|---|---|---|---|---|---|---|---|---|---|---|
| 1 | LTE Band 41 HPUE | 20M_QPSK_1_0 | 39750 | 1 | Ant 2 | 25.54 | -1.44 | 25.87 | 9.13 | M4 |
| 2 | LTE Band 41 HPUE | 20M_QPSK_1_0 | 40185 | 1 | Ant 2 | 25.56 | -1.44 | 25.68 | 9.32 | M4 |
| 3 | LTE Band 41 HPUE | 20M_QPSK_1_0 | 40620 | 1 | Ant 2 | 25.88 | -1.44 | 25.81 | 9.19 | M4 |
| 4 | LTE Band 41 HPUE | 20M_QPSK_1_0 | 41055 | 1 | Ant 2 | 25.70 | -1.44 | 26.81 | 8.19 | M4 |
| 5 | LTE Band 41 HPUE | 20M_QPSK_1_0 | 41490 | 1 | Ant 2 | 25.63 | -1.44 | 25.21 | 9.79 | M4 |
| 6 | LTE Band 41 HPUE | 20M_QPSK_1_0 | 41055 | 2 | Ant 2 | 25.70 | -1.44 | 24.71 | 10.29 | M4 |
| 7 | LTE Band 48 | 20M_QPSK_1_0 | 55340 | 1 | Ant 5 | 22.43 | -1.44 | 27.29 | 7.71 | M4 |
| 8 | LTE Band 48 | 20M_QPSK_1_0 | 55830 | 1 | Ant 5 | 22.61 | -1.44 | 27.89 | 7.11 | M4 |
| 9 | LTE Band 48 | 20M_QPSK_1_0 | 56150 | 1 | Ant 5 | 22.53 | -1.44 | 28.54 | 6.46 | M4 |
| 10 | LTE Band 48 | 20M_QPSK_1_0 | 56640 | 1 | Ant 5 | 22.47 | -1.44 | 29.04 | 5.96 | M4 |
| 11 | LTE Band 48 | 20M_QPSK_1_0 | 56640 | 2 | Ant 5 | 22.47 | -1.44 | 29.69 | 5.31 | M4 |
| 12 | WLAN2.4GHz | 802.11g 6Mbps | 1 | 1 | Ant 7+8 | 22.27 | 0.12 | 32.47 | 2.53 | M3 |
| 13 | WLAN2.4GHz | 802.11g 6Mbps | 6 | 1 | Ant 7+8 | 23.82 | 0.12 | 33.34 | 1.66 | M3 |
| 14 | WLAN2.4GHz | 802.11g 6Mbps | 11 | 1 | Ant 7+8 | 20.84 | 0.12 | 33.23 | 1.77 | M3 |
| 15 | WLAN2.4GHz | 802.11g 6Mbps | 6 | 2 | Ant 7+8 | 23.82 | 0.12 | 34.42 | 0.58 | M3 |
| 28 | WLAN2.4GHz_Extended Battery | 802.11g 6Mbps | 6 | 1 | Ant 7+8 | 23.82 | 0.12 | 33.22 | 1.78 | M3 |
| 29 | WLAN2.4GHz_BLE Battery | 802.11g 6Mbps | 6 | 1 | Ant 7+8 | 23.82 | 0.12 | 33.10 | 1.90 | M3 |
| 16 | WLAN5.2GHz | 802.11a 6Mbps | 36 | 1 | Ant 7+8 | 21.45 | -3.15 | 25.01 | 9.99 | M4 |
| 17 | WLAN5.2GHz | 802.11a 6Mbps | 44 | 1 | Ant 7+8 | 22.67 | -3.15 | 25.31 | 9.69 | M4 |
| 18 | WLAN5.2GHz | 802.11a 6Mbps | 48 | 1 | Ant 7+8 | 22.03 | -3.15 | 24.66 | 10.34 | M4 |
| 19 | WLAN5.3GHz | 802.11a 6Mbps | 52 | 1 | Ant 7+8 | 22.81 | -3.15 | 25.05 | 9.95 | M4 |
| 20 | WLAN5.3GHz | 802.11a 6Mbps | 60 | 1 | Ant 7+8 | 22.35 | -3.15 | 26.21 | 8.79 | M4 |
| 21 | WLAN5.3GHz | 802.11a 6Mbps | 64 | 1 | Ant 7+8 | 22.04 | -3.15 | 27.05 | 7.95 | M4 |
| 22 | WLAN5.5GHz | 802.11a 6Mbps | 100 | 1 | Ant 7+8 | 22.33 | -3.15 | 26.61 | 8.39 | M4 |
| 23 | WLAN5.5GHz | 802.11a 6Mbps | 116 | 1 | Ant 7+8 | 22.35 | -3.15 | 27.28 | 7.72 | M4 |
| 24 | WLAN5.5GHz | 802.11a 6Mbps | 144 | 1 | Ant 7+8 | 22.15 | -3.15 | 26.37 | 8.63 | M4 |
| 25 | WLAN5.8GHz | 802.11a 6Mbps | 149 | 1 | Ant 7+8 | 21.73 | -3.15 | 26.63 | 8.37 | M4 |
| 26 | WLAN5.8GHz | 802.11a 6Mbps | 157 | 1 | Ant 7+8 | 21.41 | -3.15 | 26.62 | 8.38 | M4 |
| 27 | WLAN5.8GHz | 802.11a 6Mbps | 165 | 1 | Ant 7+8 | 21.66 | -3.15 | 27.13 | 7.87 | M4 |

**Remark:**

1. The HAC measurement system applies MIF value onto the measured RMS E-field, which is indirect method in ANSI C63.19 2011 version, and reports the RF audio interference level.
2. Phone Condition: Mute on; Backlight off; Max Volume

**Test Engineer :** Martin Li, Varus Wang, Light Wang, Ricky Gu

# 14. Uncertainty Assessment

The component of uncertainly may generally be categorized according to the methods used to evaluate them. The evaluation of uncertainly by the statistical analysis of a series of observations is termed a Type A evaluation of uncertainty. The evaluation of uncertainty by means other than the statistical analysis of a series of observation is termed a Type B evaluation of uncertainty. Each component of uncertainty, however evaluated, is represented by an estimated standard deviation, termed standard uncertainty, which is determined by the positive square root of the estimated variance.

The combined standard uncertainty of the measurement result represents the estimated standard deviation of the result. It is obtained by combining the individual standard uncertainties of both Type A and Type B evaluation using the usual “root-sum-squares” (RSS) methods of combining standard deviations by taking the positive square root of the estimated variances. Expanded uncertainty is a measure of uncertainty that defines an interval about the measurement result within which the measured value is confidently believed to lie. It is obtained by multiplying the combined standard uncertainty by a coverage factor. For purpose of this document, a coverage factor two is used, which corresponds to confidence interval of about 95 %. The DASY uncertainty Budget is showed in Table 14.1.

The judgment of conformity in the report is based on the measurement results excluding the measurement uncertainty.

| Error Description | Uncertainty Value (±%) | Probability | Divisor | (Ci) E | Standard Uncertainty (E) (±%) |
|---|---|---|---|---|---|
| **Measurement System** | | | | | |
| Probe Calibration | 5.1 | N | 1 | 1 | 5.1 |
| Axial Isotropy | 4.7 | R | 1.732 | 1 | 2.7 |
| Sensor Displacement | 16.5 | R | 1.732 | 1 | 9.5 |
| Boundary Effects | 2.4 | R | 1.732 | 1 | 1.4 |
| Phantom Boundary Effect | 7.2 | R | 1.732 | 1 | 4.2 |
| Linearity | 4.7 | R | 1.732 | 1 | 2.7 |
| Scaling with PMR calibration | 10.0 | R | 1.732 | 1 | 5.8 |
| System Detection Limit | 1.0 | R | 1.732 | 1 | 0.6 |
| Readout Electronics | 0.3 | N | 1 | 1 | 0.3 |
| Response Time | 2.6 | R | 1.732 | 1 | 1.5 |
| Integration Time | 2.6 | R | 1.732 | 1 | 1.5 |
| RF Ambient Conditions | 3.0 | R | 1.732 | 1 | 1.7 |
| RF Reflections | 12.0 | R | 1.732 | 1 | 6.9 |
| Probe Positioner | 1.2 | R | 1.732 | 1 | 0.7 |
| Probe Positioning | 4.7 | R | 1.732 | 1 | 2.7 |
| Extrap. and Interpolation | 1.0 | R | 1.732 | 1 | 0.6 |
| **Test Sample Related** | | | | | |
| Device Positioning Vertical | 4.7 | R | 1.732 | 1 | 2.7 |
| Device Positioning Lateral | 1.0 | R | 1.732 | 1 | 0.6 |
| Device Holder and Phantom | 2.4 | R | 1.732 | 1 | 1.4 |
| Power Drift | 5.0 | R | 1.732 | 1 | 2.9 |
| **Phantom and Setup Related** | | | | | |
| Phantom Thickness | 2.4 | R | 1.732 | 1 | 1.4 |
| **Combined Std. Uncertainty** | | | | | 16.4% |
| **Coverage Factor for 95 %** | | | | | K=2 |
| **Expanded STD Uncertainty** | | | | | 32.7% |

**Table 14.1 Uncertainty Budget of HAC free field assessment**

## 15. References

[1] ANSI C63.19-2011, “American National Standard for Methods of Measurement of Compatibility between Wireless Communications Devices and Hearing Aids”, 27 May 2011.

[2] FCC KDB 285076 D01v06r02, “Equipment Authorization Guidance for Hearing Aid Compatibility”, September 19, 2022

[3] FCC KDB 285076 D03v01r06, “Hearing aid compatibility frequently asked questions”, July 20, 2022.

[4] SPEAG DASY System Handbook

------THE END------