WS50

Enterprise Wearable Solution

Quick Start Guide

ZEBRA

MN-004366-01EN Rev A

Copyright

ZEBRA and the stylized Zebra head are trademarks of Zebra Technologies Corporation, registered in many jurisdictions worldwide. All other trademarks are the property of their respective owners. ©2022 Zebra Technologies Corporation and/or its affiliates. All rights reserved.

Information in this document is subject to change without notice. The software described in this document is furnished under a license agreement or nondisclosure agreement. The software may be used or copied only in accordance with the terms of those agreements.

For further information regarding legal and proprietary statements, please go to:

SOFTWARE: zebra.com/linkoslegal.
COPYRIGHTS: zebra.com/copyright.
WARRANTY: zebra.com/warranty.
END USER LICENSE AGREEMENT: zebra.com/eula.

Terms of Use

Proprietary Statement

This manual contains proprietary information of Zebra Technologies Corporation and its subsidiaries ("Zebra Technologies"). It is intended solely for the information and use of parties operating and maintaining the equipment described herein. Such proprietary information may not be used, reproduced, or disclosed to any other parties for any other purpose without the express, written permission of Zebra Technologies.

Product Improvements

Continuous improvement of products is a policy of Zebra Technologies. All specifications and designs are subject to change without notice.

Liability Disclaimer

Zebra Technologies takes steps to ensure that its published Engineering specifications and manuals are correct; however, errors do occur. Zebra Technologies reserves the right to correct any such errors and disclaims liability resulting therefrom.

Limitation of Liability

In no event shall Zebra Technologies or anyone else involved in the creation, production, or delivery of the accompanying product (including hardware and software) be liable for any damages whatsoever (including, without limitation, consequential damages including loss of business profits, business interruption, or loss of business information) arising out of the use of, the results of use of, or inability to use such product, even if Zebra Technologies has been advised of the possibility of such damages. Some jurisdictions do not allow the exclusion or limitation of incidental or consequential damages, so the above limitation or exclusion may not apply to you.

Device Features

The WS50 is a wearable computer that offers flexible hands-free operation for right or left-hand users.

The WS50 is available in two configurations:

- Converged Scanner
- Wrist Mount.

WS50 Converged Scanner Features

The WS50 Converged Scanner is worn on the operator's index and middle fingers and utilizes a thumb-operated trigger. It has a touch panel, a trigger assembly, a SE4770 scan engine, and other features.

Front View

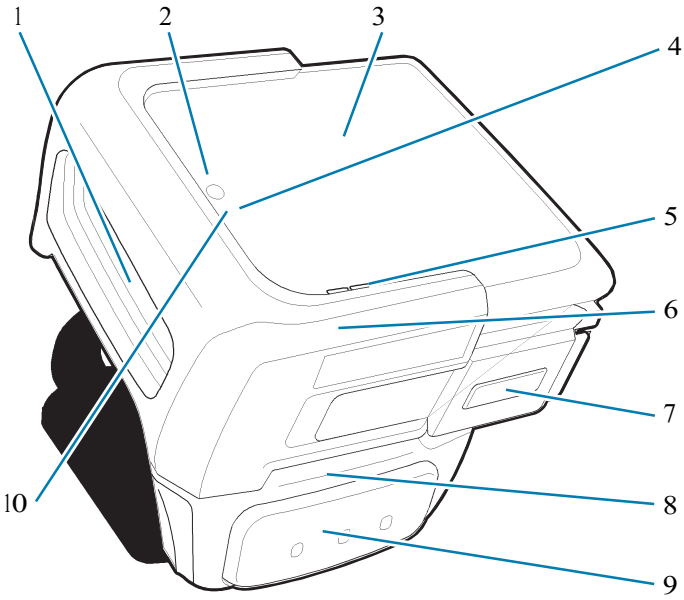

1	Scanner window	Provides data capture using the imager.
2	Microphone	Use for voice communications or audio recordings.
3	Display	Displays all information needed to operate the device.
4	Charging LED	Indicates the battery charge state while charging.
5	Speaker	Use for voice communication or audio playback.
6	Deflector	Protects the device. **NOTE:** The deflector includes mandatory laser safety warning markings and must always be fitted when in use.
7	Left button	User programmable; defaults to Back button.
8	Scan trigger	Initiates barcode data capture when a scan-enabled application is active.
9	Trigger assembly	Consists of a finger strap and a scan trigger; rotatable to provide left-hand or right-hand use.
10	Notification LED	Indicates an application notification is received.

Rear View

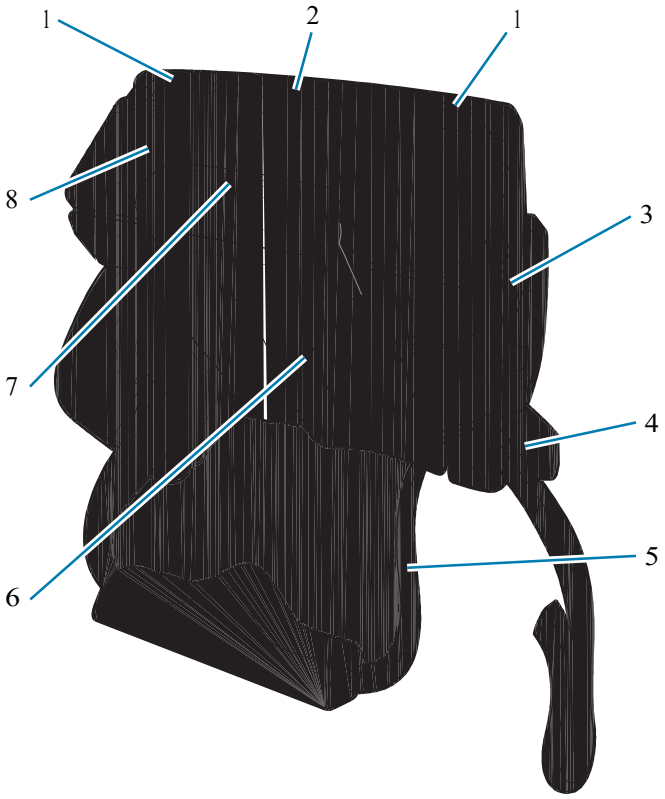

1	Scan/Custom LED	Indicates data capture and custom applications-controlled status.
2	Interface connector	Provides USB host and client communication, and device charging via cables and accessories.
3	Right button	User programmable; defaults to Home button; presses to power on the device.
4	Strap buckle	Tightens or loosens the finger strap on the fingers.
5	Finger strap	Use for securely holding the device on the fingers. Comes pre-installed on every WS50 Converged Scanner.
6	Comfort pad	Cushions the fingers from the device.
7	Shell release tab	Press down to release the core from the shell.
8	Battery	High capacity battery 1300 mAh, provides power for operating the device.

NOTE: To use the WS50 Converged Scanner with the back of hand (BOH) mount, replace the trigger assembly with the BOH mount. See Installing the Back of Hand Mount on page 10 for more details.

See Also

Installing the Trigger and Shell Assembly for the Converged Scanner
Changing the Trigger Position for the Converged Scanner
Removing the Trigger and Shell Assembly

WS50 Wrist Mount Features

The WS50 Wrist Mount has a touch panel, four buttons, a wrist strap, and other features.

Front View

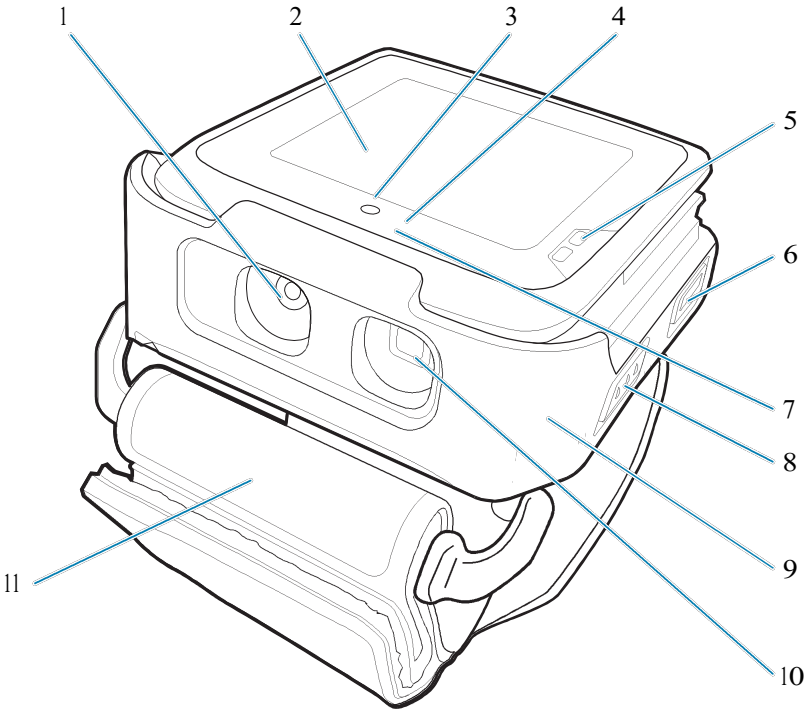

1	Camera	Takes photos and videos (available on configurations with camera only).
2	Display	Displays all information needed to operate the device.
3	Microphone	Use for voice communications or audio recordings.
4	Charging LED	Indicates the battery charge state while charging.
5	Speaker	Use for voice communication or audio playback.
6	Left 2 button	User programmable; defaults to **Back** button.
7	Notification LED	Indicates an application notification is received.
8	Left 1 button	User programmable
9	Wrist mount assembly	Consists of a device holder and a wrist strap; protects and holds the core in shell.
10	Camera flash	Provides illumination for the camera (available on configurations with the camera only).
11	Wrist strap	Use for securely holding the device on the wrist; comes pre-installed on every WS50 Wrist Mount; available in small and large size.

Rear View

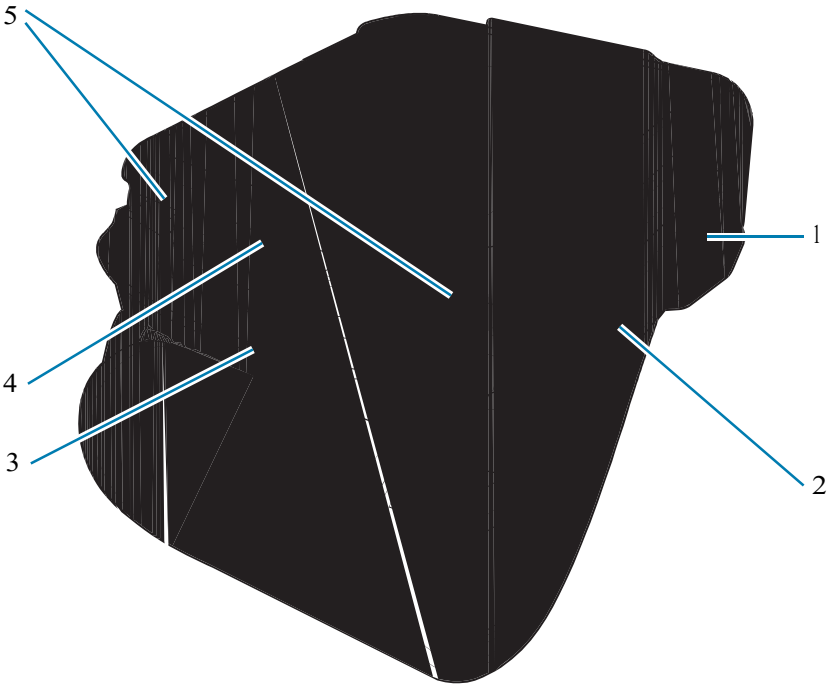

1	Right 1 button	User programmable; defaults to initiate data capture.
2	Right 2 button	User programmable; defaults to **Home** button; presses to power on the device.
3	Wrist mount assembly release tab	Press down to release the core in shell from the wrist mount assembly.
4	Interface connector	Provides USB host and client communication, and device charging via cables and accessories.
5	Scan/Custom LED	Indicates data capture and custom applications-controlled status.

See Also

Installing the Wrist Mount Assembly
Removing the Wrist Mount Assembly

Setting Up the Device

To start using the device for the first time:

1. Install the battery.
2. Install the wearable assembly.
   - Finger trigger assembly
   - Wrist mount
3. Charge the device using one of the charging accessories.
4. Power on the device.

Installing the Battery

Install the 1300 mAh battery to the WS50 Converged Scanner. Install the 800 mAh battery to the WS50 Wrist Mount.

1. Align the battery so that the battery bottom engages the locking slots (1).

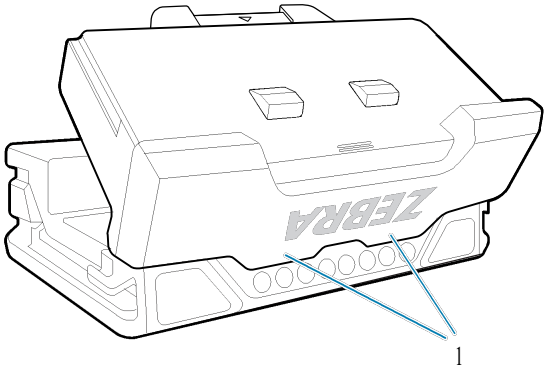

2. Press the battery down into the battery compartment until the battery release latches snap into place.

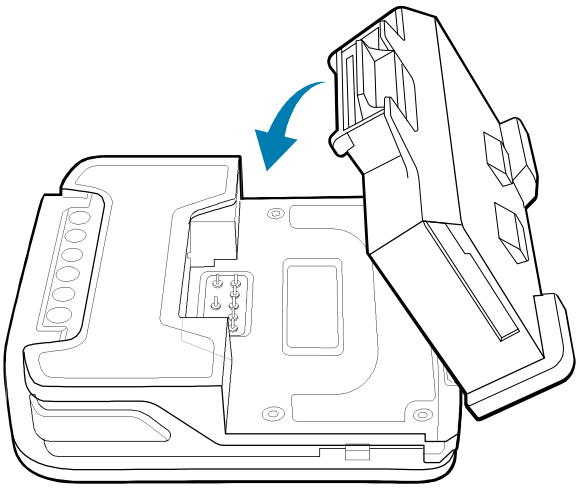

Installing the Trigger and Shell Assembly for the Converged Scanner

Install the core device to the trigger and shell assembly to utilize a thumb-operated trigger.

1. Ensure the touch panel of the core device faces upward.

2. Slide the core (2) into the trigger and shell assembly (1) until the shell release latch snaps into place.

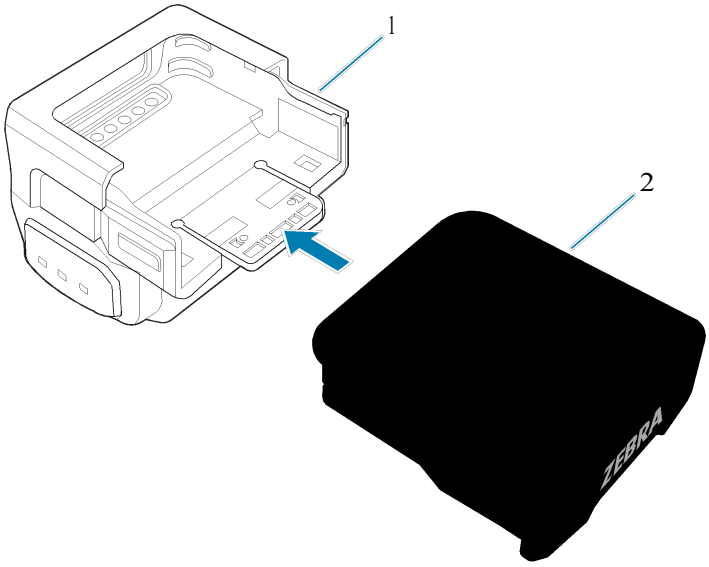

Changing the Trigger Position for the Converged Scanner

The trigger assembly can be changed to accommodate left-hand or right-hand use.

Determine whether the WS50 Converged Scanner is used on the right or left hand so that the Scan Trigger is positioned next to the thumb.

NOTE: The described procedures are applicable to both right-handed and left-handed users. The illustrations in this section show the steps to change the trigger position from right to left as an example.

1. On the bottom of the device, lift the finger comfort pad from the front of the device, and then lift it from the rear.

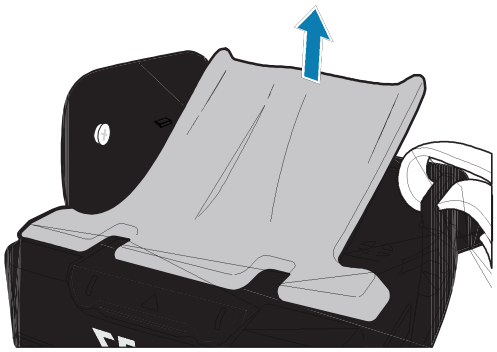

2. Follow the instructions on the back of the device to unmount the trigger assembly.
   a) Unlock the trigger assembly by pushing the release latch to Unlock (4).
   b) Slide the trigger assembly following the Unlock (1) direction until the black triangle (2) is aligned with the engraved triangle (3).

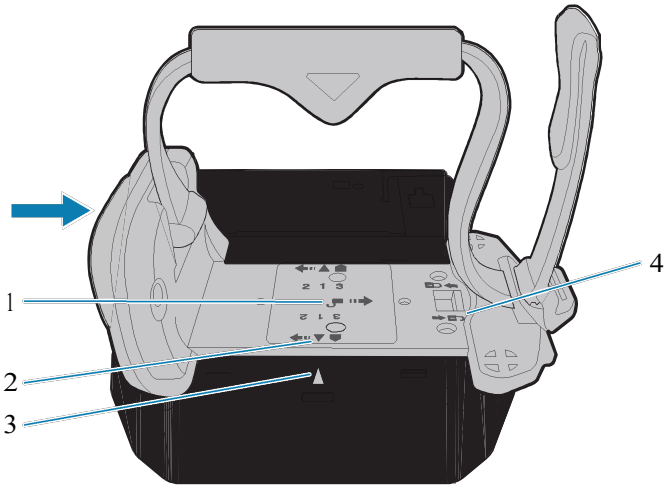

   c) Lift the trigger assembly.

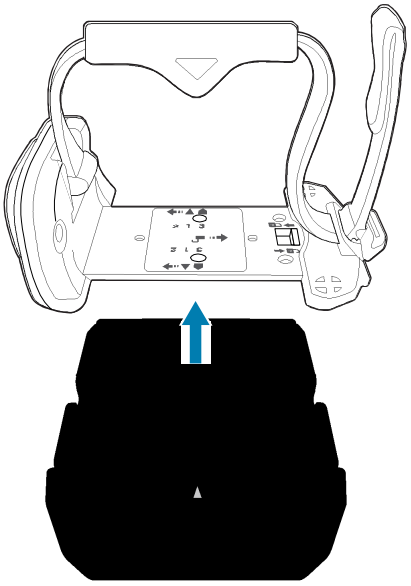

3. Rotate the trigger assembly so that the scan trigger is positioned next to the thumb.

4. When replacing the trigger assembly onto the back of the core in the shell, ensure the black triangle (2) is aligned with the engraved triangle (3).

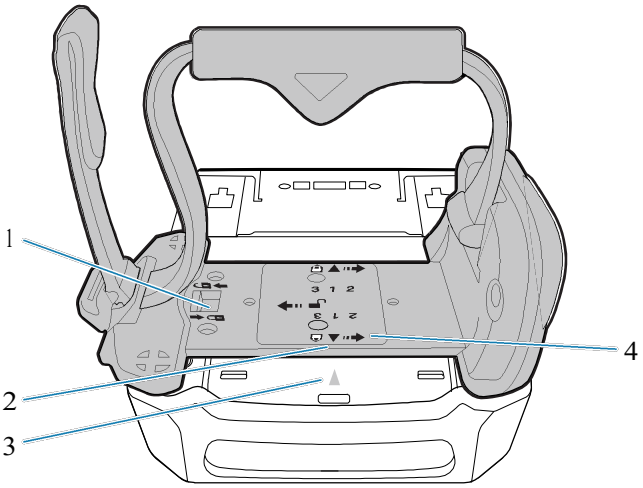

5. Slide the trigger assembly following the Lock (4) direction.
6. Lock the trigger assembly by pushing the latch to the Lock (1) position, if necessary.
7. Reattach the finger comfort pad onto the bottom of the device.

Installing the Back of Hand Mount

Mount the WS50 Back of Hand Mount (BOH) mount to the hand wrap, and then install the core in shell onto the BOH mount.

Determine whether the device is used on the right or left hand.

NOTE: The described procedures are applicable to both right-handed and left-handed users. The steps in this section is using a right-hand wrap as an example.

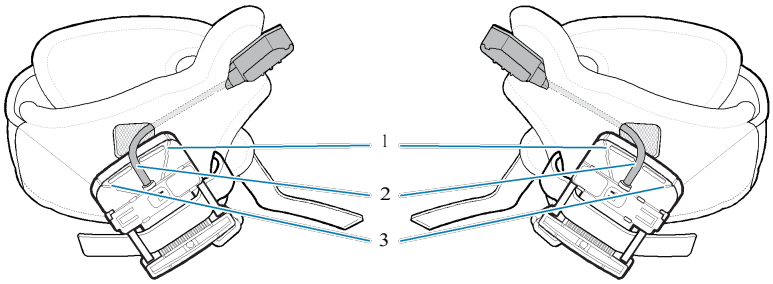

The BOH mount has three slots for the user to position the trigger cable. Insert the trigger cable into one of the slots according to the size of the user's hand:

1	For large-hand users
2	For medium-hand users
3	For small-hand users

1. To mount a WS50 BOH mount to the hand wrap:
   a) Insert the trigger cable and button (1) through the trigger slot of the hand wrap (2).

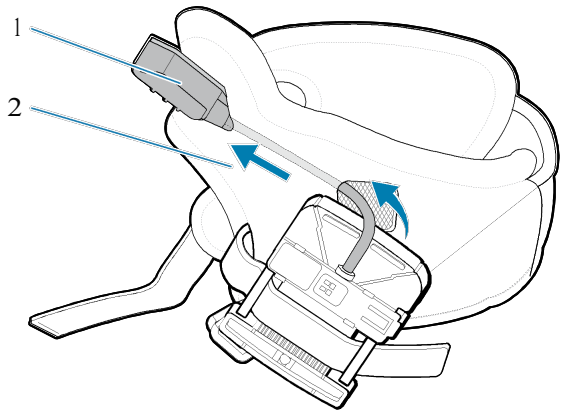

   b) Insert the strap (2) through one of the strap slots (3) on the BOH mount (1).

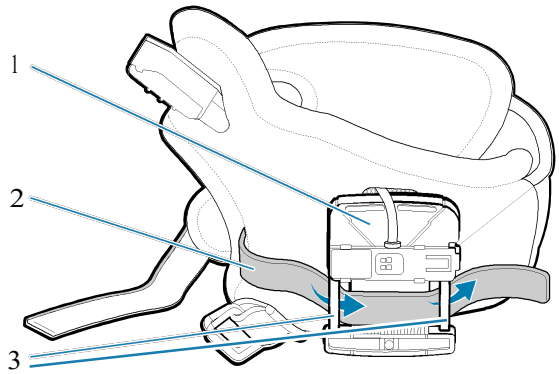

   c) Insert the strap through the other slot of the mount, and then fasten it with the hook and loop fastener.

2. Position the hand wrap on the hand by sliding your hand through the hand wrap, with your thumb through the smaller opening and your remaining four fingers through the larger opening.

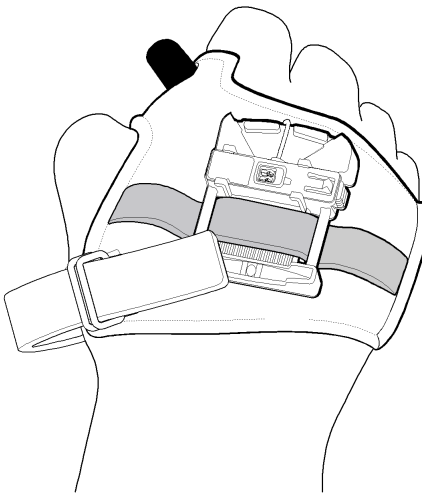

3. Slide the strap (1) through the buckle and secure the end of the strap in place with the hook and loop fastener.

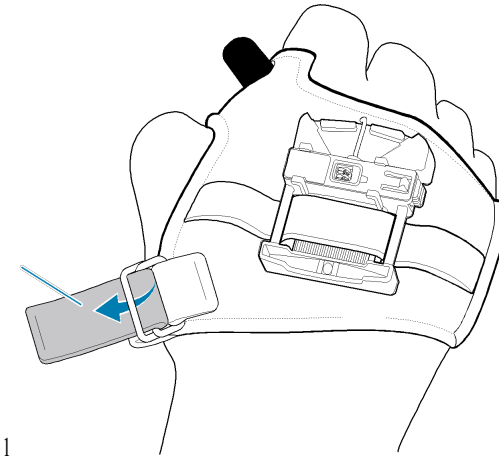

Adjust the strap to a comfortable position to fit securely by tightening or loosening the strap.

4. Position the trigger button so that the button is easy-access to your thumb, and then secure it on the hand wrap using the hook and loop fastener.
5. Slide the core (1) in shell onto the BOH mount. Press the BOH mount latch (2) when mounting.

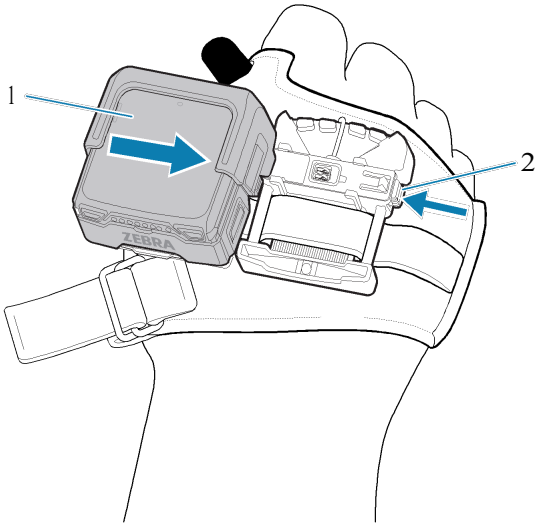

Release the latch (2) when the device snaps into place on the BOH mount.

6. Reposition the mount on the hand wrap to align the mount with the middle finger knuckle.
7. Tighten or loosen the hand wrap strap, if necessary.

To unmount the core in shell from the BOH mount, press the BOH mount latch and slide the core in shell away from the BOH mount latch.

Installing the Wrist Mount Assembly

The wrist mount assembly allows the operator to wear the device on the wrist. Install the device back onto the wrist mount assembly after battery charging.

1. Slide the core (1) into the wrist mount shell (2) until the wrist mount shell release tab snaps into place.

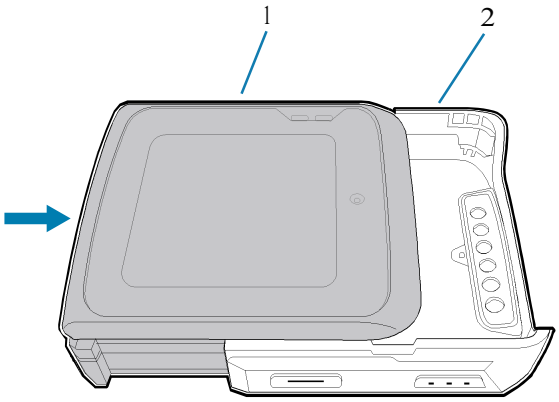

2. Insert the device, top first, into the wrist mount holder.

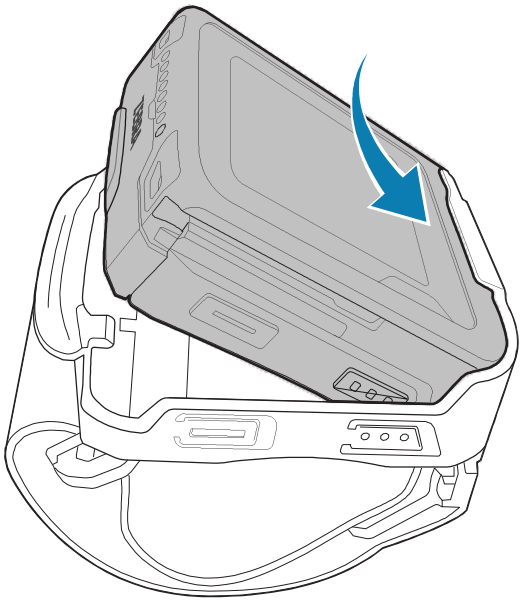

3. Press down on the wrist mount release tab (3) and the device simultaneously until the locking tabs (2) slide into the locking slots (1).

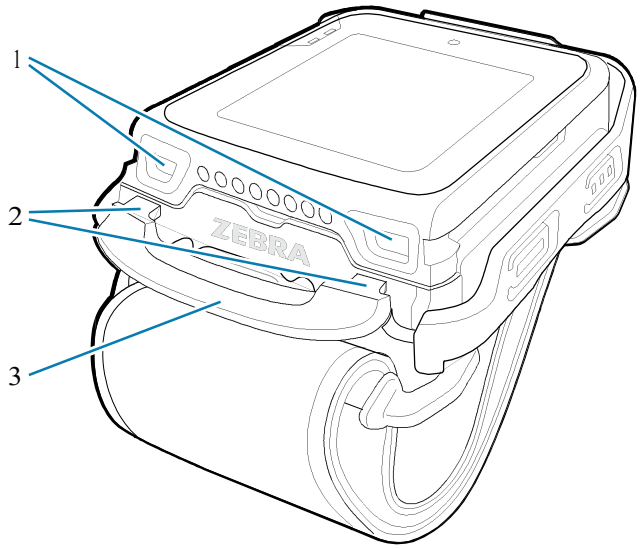

Removing the Trigger and Shell Assembly

Remove the core from the trigger and shell assembly when you need to change a battery.

1. Press down the shell release tab (1).

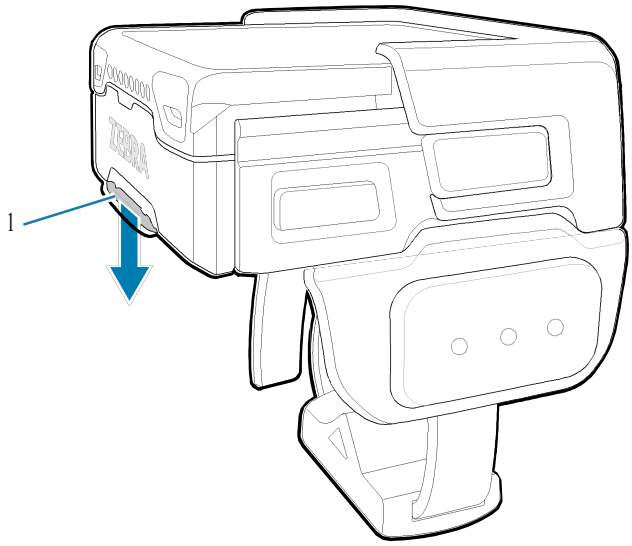

2. Slide the core (1) away from the trigger and shell assembly (2).

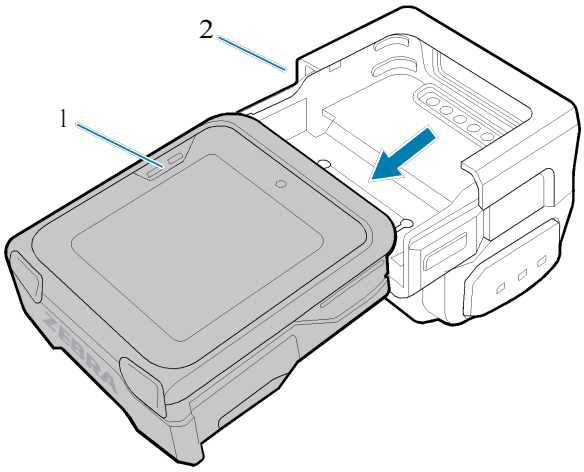

Removing the Wrist Mount Assembly

Unmount the core and shell from the wrist mount assembly for charging. Replace the the core and shell to the assembly after charging.

1. Press down on the wrist mount release tab (3).
2. Lift the device, bottom first, from the wrist mount holder.

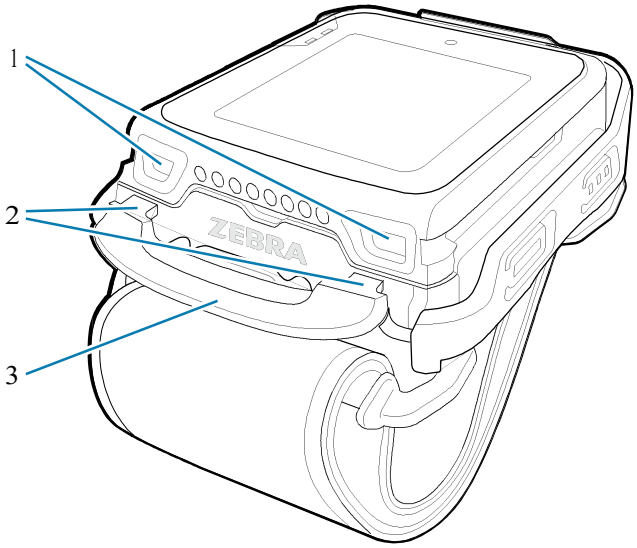

The locking tabs (2) are lifted away from the locking slots (1).

3. Remove the core in shell from the wrist mount assembly.

4. To remove the core (2) from the shell (3), press down the shell release tab (1), and then slide the core away from the shell (3).

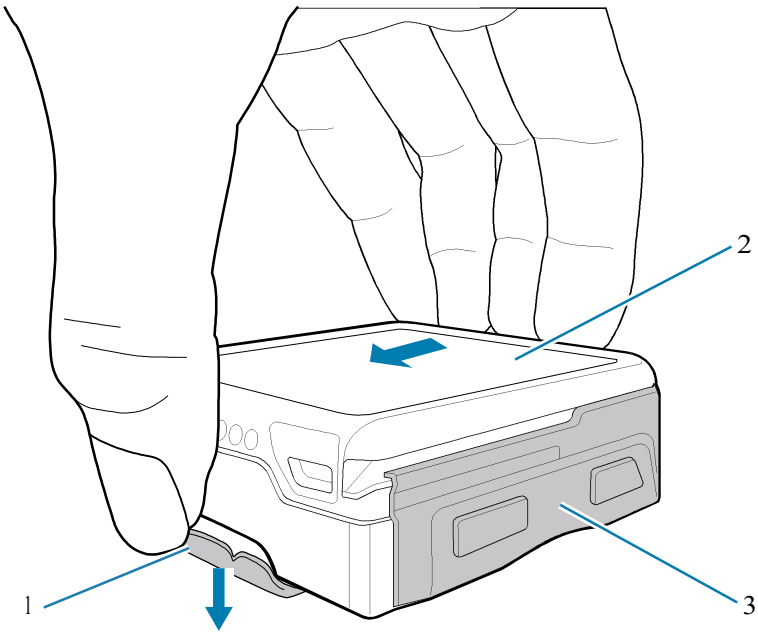

Replacing the Battery

The WS50 supports Hot Swap mode where the user can replace the battery without powering off the device. When the user removes the core from the shell, the display turns off and the device enters a low power state (indicated by a single red flash of the scan/custom LED). Replace the battery within two minutes to preserve memory persistence.

1. Remove the wearable assembly.

   For information about removing the finger trigger and wrist mount assemblies, go to Removing the Trigger and Shell Assembly on page 14 and Removing the Wrist Mount Assembly on page 15.

2. Rotate the device so that the touch screen is facing downward.
3. Push the battery release latch (1).

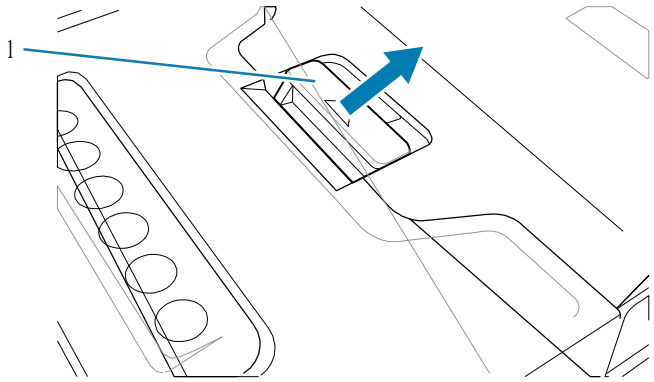

4. Lift the battery from the battery compartment.

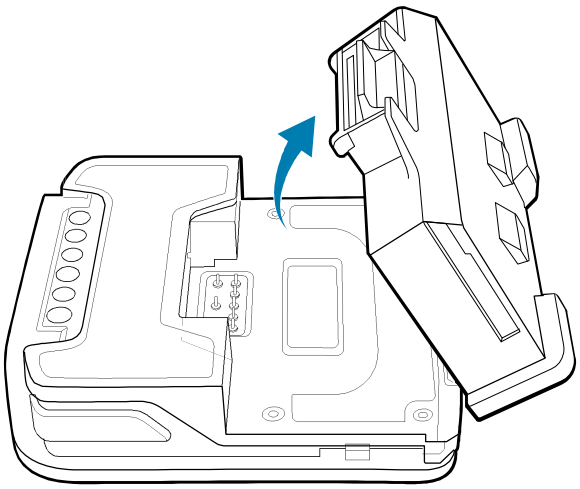

5. Align the battery so that the battery bottom engages the locking slots (1).

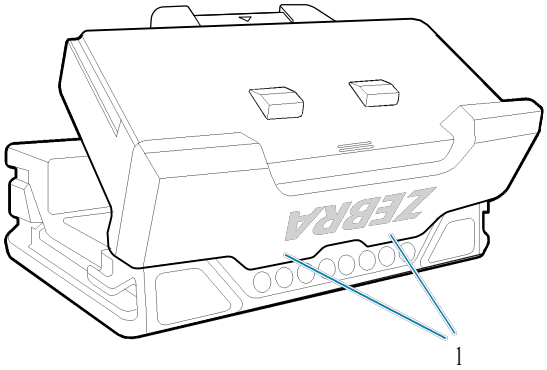

6. Press the battery down into the battery compartment until the battery release latches snap into place.

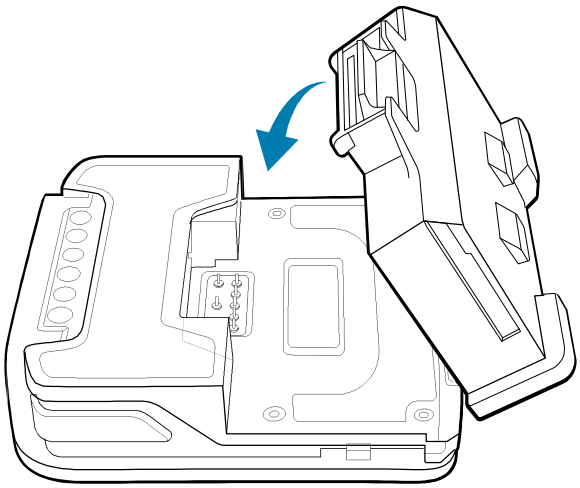

Charging

Use one of the charging accessories to charge the device and/or spare battery.

Table 1 Charging Accessories

Accessories	Part Number	Charging		Communication	
		Battery (In device)	Spare Battery	USB	Ethernet
USB Charge Cable	CBL-WS5X-USB1-01	Yes	No	Yes	No
Converged Scanner and/or 1300 mAh Battery					
2-Slot Charge Only Cradle	CRD-WS5X-2SCV-01	Yes	No	No	No
10-Slot Charge Only Cradle	CRD-WS5X-10SCV-01	Yes	No	No	No
5-Slot Ethernet Cradle with 5-Slot Battery Charger	CRD-WS5X-5SECV-01	Yes	Yes	No	Yes
4-Slot Battery Charger	SAC-WS5X-4S13-01	No	Yes	No	No
20-Slot Battery Charger	SAC-WS5X-20S13-01	No	Yes	No	No
Wrist Mount and/or 800 mAh Battery					
2-Slot Charge Only Cradle	CRD-WS5X-2SWR-01	Yes	No	No	No
10-Slot Charge Only Cradle	CRD-WS5X-10SWR-01	Yes	No	No	No
5-Slot Ethernet Cradle with 5-Slot Battery Charger	CRD-WS5X-5SEWR-01	Yes	Yes	No	Yes
4-Slot Battery Charger	SAC-WS5X-4S8-01	No	Yes	No	No
20-Slot Battery Charger	SAC-WS5X-20S8-01	No	Yes	No	No

Charging the Main Battery

Charge the battery in a device with one of the charge-only cradles or the USB charge cable.

CAUTION: Ensure that you follow the guidelines for battery safety described in the devce Product Reference Guide.

1. Connect the charger to a power source.

2. Insert the device into a cradle slot (1) or attach it to the USB charge cable.

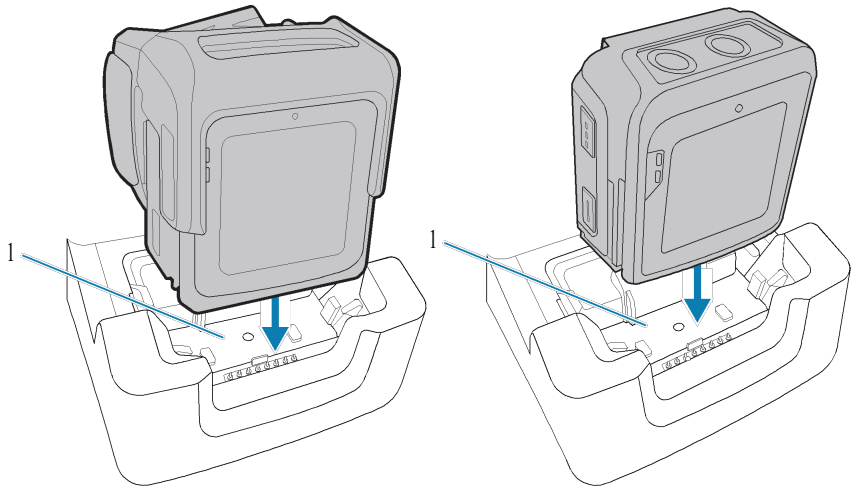

The device turns on and begins charging. The Notification LED on the touch panel shows amber while charging, then turns solid green when fully charged.

Charging the Spare Battery

Charge the spare battery with one of the battery chargers.

1. Connect the charger to a power source.
2. Insert the battery into a battery charging well.

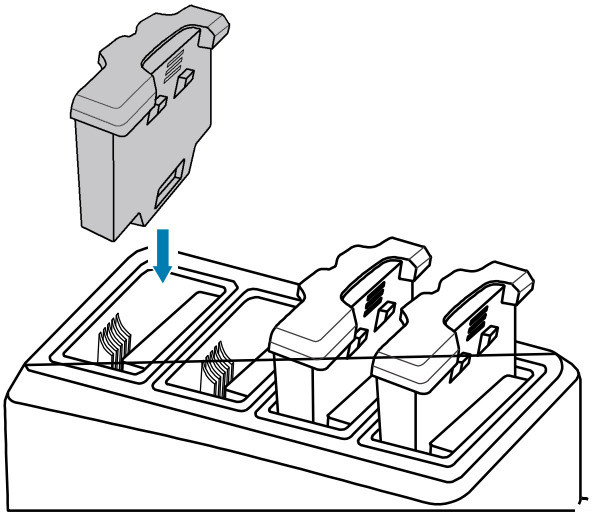

3. Gently press down on the battery to ensure proper contact.

   The spare battery charging LED on the battery charger indicates the status of the battery charging.

Charging Indicators

The spare battery charging LED on the cradle cup indicates the status of the spare battery charging.

Table 2 Spare Battery Charging LED Indicators

State	Indication
Off	The battery is not charging. The battery is not inserted correctly in the cradle or connected to a power source. Cradle is not powered.
Solid Amber	Healthy battery is charging.
Solid Green	Healthy battery charging is complete.
Fast Blinking Red (2 blinks/ second)	Charging error, for example: • Temperature is too low or too high. • Charging has gone on too long without completion (typically eight hours).
Solid Red	Unhealthy battery is charging or fully charged.

Charging Temperature

Charge batteries in temperatures from 2°C and 46°C (35.6°F and 114.8°F). The device or cradle always performs battery charging in a safe and intelligent manner. At higher temperatures (for example, approximately +37°C (+98°F)) the device or cradle may for small periods of time alternately enable and disable battery charging to keep the battery at acceptable temperatures. The device and cradle indicate when charging is disabled due to abnormal temperatures via its LED.

2-Slot Charge Only Cradle

2-Slot Charge Only Cradle:

- Provides 12 VDC (nominal) power for operating the device.
- Charges the device's battery.

Figure 1 2-Slot Charge Only Cradle

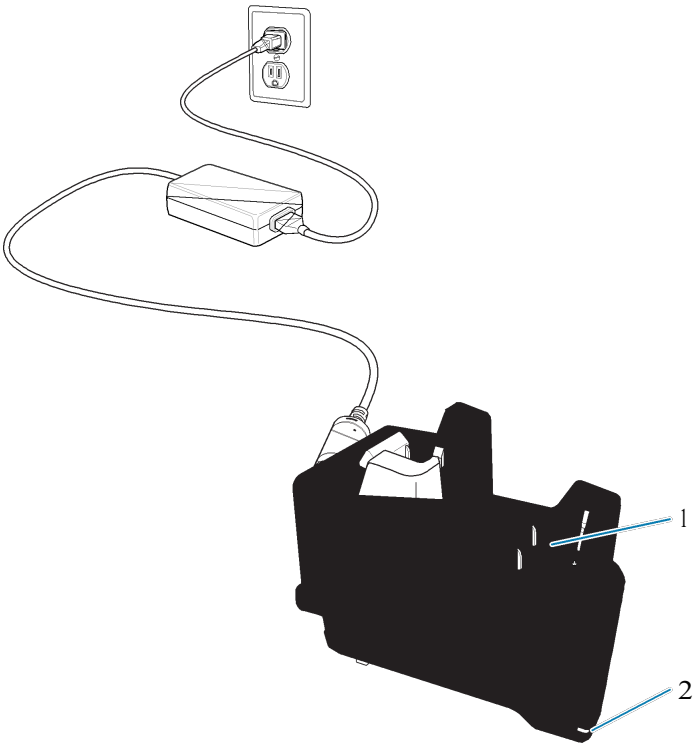

1	Device charging slot
2	Power LED

10-Slot Charge Only Cradle

10-Slot Charge Only Cradle:

- Provides 12 VDC (nominal) power for operating the device.
- Charges the device's battery.

Figure 2 10-Slot Charge Only Cradle

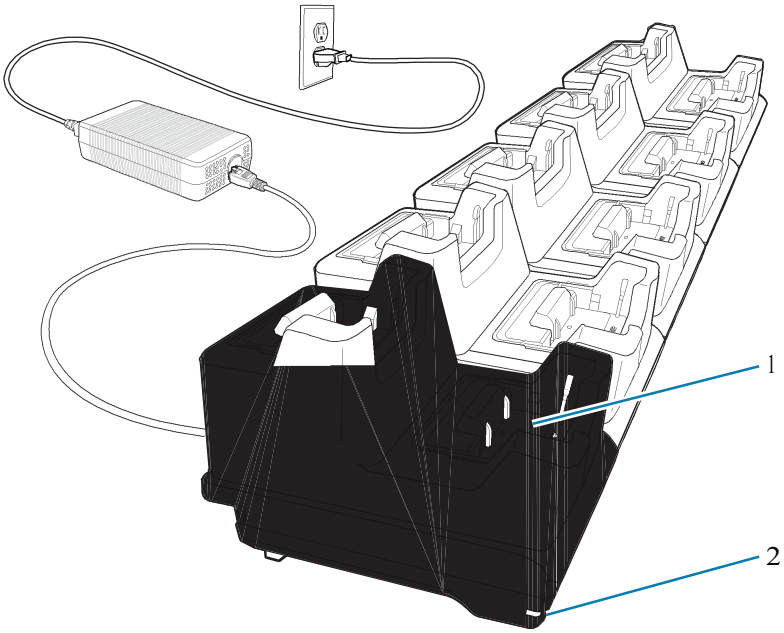

1	Device charging slot
2	Power LED

5-Slot Ethernet Cradle with Battery Charger

5-Slot Ethernet Cradle with Battery Charger:

- Provides 12 VDC (nominal) power for operating the device.
- Connects the device (up to five) to an Ethernet network.
- Simultaneously charges up to five devices and up to five spare batteries.

Figure 3 5-Slot Ethernet Cradle with Battery Charger

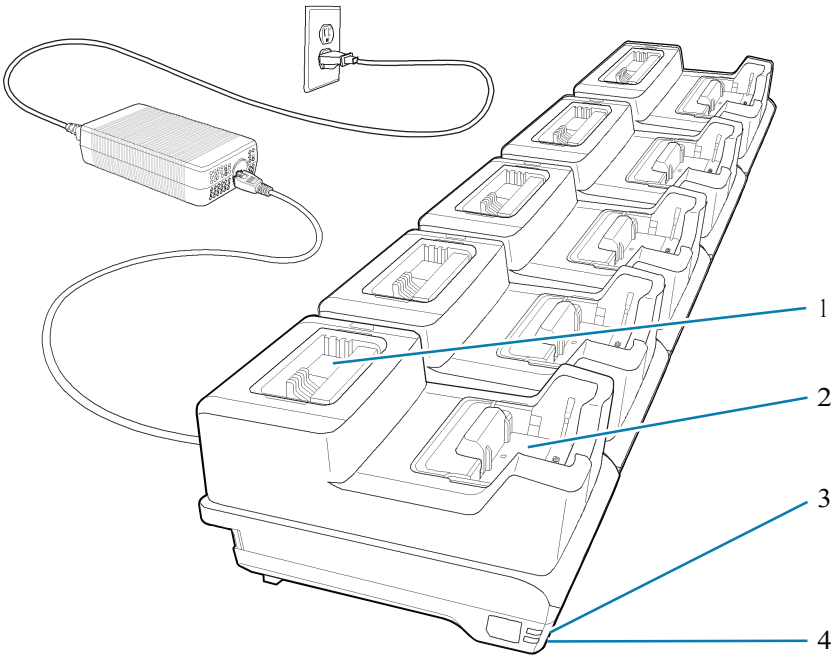

1	Device charging slot
2	1000 LED
3	100/100 LED

4-Slot Battery Charger

The 4-Slot Battery Charger charges up to four spare batteries.

Figure 4 4-Slot Battery Charger

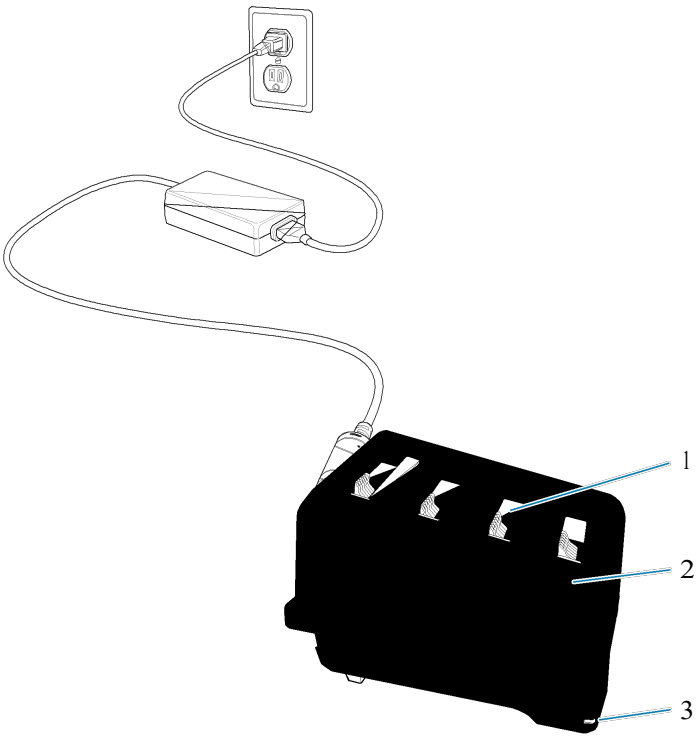

1	Battery slot
2	Battery charging LED
3	Power LED

20-Slot Battery Charger

The 20-Slot Battery Charger charges up to 20 spare batteries.

Figure 5 20-Slot Battery Charger

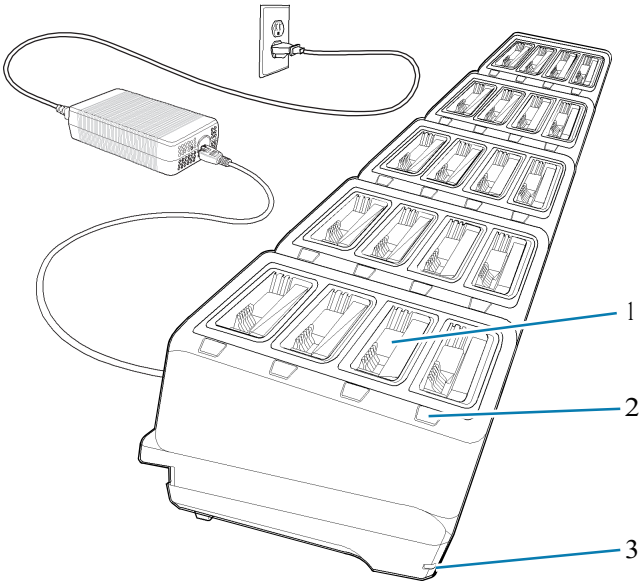

1	Power supply
2	AC line cord
3	DC power port
4	DC line cord

USB Charge Cable

The USB Charge Cable snaps onto the bottom of the device and is easily removed when not in use. The cable charges the device and allows the device to transfer data to a host computer.

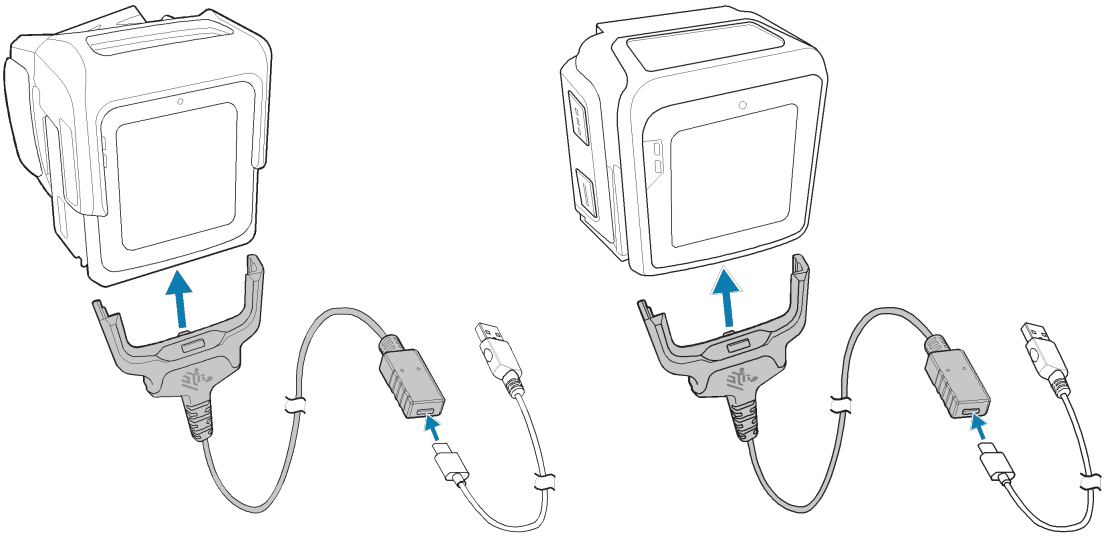

Ergonomic Recommendations

To avoid or minimize risk of ergonomic injury, follow the ergonomic recommendations.

- Ensure users are trained in proper and secure mounting of the Converged Scanner on the fingers.
- Ensure that the finger comfort pad is in place and the strap buckle is secured properly on the fingers with the Converged Scanner.
- Ensure that users are trained in proper and secure mounting of the Wrist Mount on the wrist.
- Ensure that the device is not worn near the wrist joint.
- Use a smaller wrist strap for small to medium wrist size. Use a larger strap for medium to large wrist size.
- Ensure that the device is mounted so that the display is oriented towards the user.
- Maintain and clean wearable components such as straps and soft goods.
- Reduce or eliminate unnecessary repetitive motion and activation.
- Maintain a neutral posture.
- Reduce or eliminate elevated or raised arm and shoulder postures.
- Reduce or eliminate excessive force.
- Keep objects that are used frequently within easy reach.
- Perform tasks at correct heights.
- Reduce or eliminate direct pressure.
- Provide adequate clearance.
- Provide a suitable working environment.
- Improve working procedures using the device.