FCC RF Test Report

APPLICANT	:	BandRich Inc.
EQUIPMENT	:	Ruggedized 4G LTE M2M & Vehicle Mount Router
BRAND NAME	:	BandLuxe
MODEL NAME	:	K535
FCC ID	:	UZI-35K888
STANDARD	:	47 CFR Part 2, 24(E), 27
CLASSIFICATION	:	PCS Licensed Transmitter (PCB)

The product was received on Nov. 02, 2015 and completely tested on Nov. 10, 2015. We, SPORTON INTERNATIONAL INC., would like to declare that the tested sample has been evaluated in accordance with the test procedures given in ANSI / TIA / EIA-603-D-2010 and the testing has shown the tested sample to be in compliance with the applicable technical standards.

The test results in this report apply exclusively to the tested model / sample. Without written approval of SPORTON INTERNATIONAL INC., the test report shall not be reproduced except in full.

Reviewed by: Joseph Lin / Supervisor

Approved by: Jones Tsai / Manager

Testing Laboratory
1190

SPORTON INTERNATIONAL INC.
No. 52, Hwa Ya 1st Rd., Hwa Ya Technology Park, Kwei-Shan District, Tao Yuan City, Taiwan, R.O.C.

TABLE OF CONTENTS

REVISION HISTORY **4**

SUMMARY OF TEST RESULT **5**

1 GENERAL DESCRIPTION **6**

1.1 Applicant 6
1.2 Manufacturer 6
1.3 Product Feature of Equipment Under Test 6
1.4 Product Specification subjective to this standard 7
1.5 Modification of EUT 7
1.6 Emission Designator 8
1.7 Testing Location 10
1.8 Applicable Standards 10

2 TEST CONFIGURATION OF EQUIPMENT UNDER TEST **11**

2.1 Test Mode 11
2.2 Connection Diagram of Test System 13
2.3 Support Unit used in test configuration and system 13
2.4 Measurement Results Explanation Example 13
2.5 Frequency List of Low/Middle/High Channels 14

3 CONDUCTED TEST ITEMS **17**

3.1 Measuring Instruments 17
3.2 Test Setup 17
3.3 Test Result of Conducted Test 17
3.4 Conducted Output Power and ERP/EIRP 18
3.5 Peak-to-Average Ratio 19
3.6 Occupied Bandwidth 20
3.7 Conducted Band Edge 21
3.8 Conducted Spurious Emission 22
3.9 Frequency Stability 23

4 RADIATED TEST ITEMS **24**

4.1 Measuring Instruments 24
4.2 Test Setup 24
4.3 Test Result of Radiated Test 24
4.4 Effective Radiated Power and Effective Isotropic Radiated Power 25
4.5 Radiated Spurious Emission 27

5 LIST OF MEASURING EQUIPMENT **28**

6 UNCERTAINTY OF EVALUATION **29**

APPENDIX A. TEST RESULTS OF CONDUCTED TEST

APPENDIX B. TEST RESULTS OF RADIATED TEST

APPENDIX C. TEST SETUP PHOTOGRAPHS

REVISION HISTORY

REPORT NO.	VERSION	DESCRIPTION	ISSUED DATE
FG5N0203B	Rev. 01	Initial issue of report	Nov. 23, 2015

SUMMARY OF TEST RESULT

Report Section	FCC Rule	Description	Limit	Result	Remark
3.4	§2.1046	Conducted Output Power	Reporting Only	PASS	-
3.5	§24.232(d)	Peak-to-Average Ratio	<13 dB	PASS	-
3.6	§2.1049	Occupied Bandwidth	Reporting Only	PASS	-
3.7	§2.1051 §24.238(a) §27.53(g) §27.53(h)	Conducted Band Edge Measurement (Band 2) (Band 4) (Band 12) (Band 17)(Band 25)	< 43+10log10(P[Watts])	PASS	-
3.8	§2.1051 §24.238(a) §27.53(g) §27.53(h)	Conducted Spurious Emission (Band 2) (Band 4) (Band 12) (Band 17) (Band 25)	< 43+10log10(P[Watts])	PASS	-
3.9	§2.1055 §24.235 §27.54	Frequency Stability Temperature & Voltage	Within Authorized Band	PASS	-
4.4	§27.50(c)(10)	Effective Radiated Power (Band 12) (Band 17)	ERP < 3 Watt	PASS	-
	§24.232(c)	Equivalent Isotropic Radiated Power (Band 2)(Band 25)	EIRP < 2Watt		
	§27.50(d)(4)	Equivalent Isotropic Radiated Power (Band 4)	EIRP < 1Watt		
4.5	§2.1053 §24.238(a) §27.53(g) §27.53(h)	Radiated Spurious Emission (Band 2) (Band 4) (Band 12) (Band 17)(Band 25)	< 43+10log$_{10}$(P[Watts])	PASS	Under limit 24.61 dB at 3819.000 MHz

1 General Description

1.1 Applicant

BandRich Inc.
6F-2., No. 71, Zhouzi St., Neihu Dist., Taipei City 11493, Taiwan (R.O.C.)

1.2 Manufacturer

FAIR GOAL ELECTRONIC CO.
1F., No. 97-1, Haihu, Luzhu Township, Taoyuan County 338, Taiwan (R.O.C.)

1.3 Product Feature of Equipment Under Test

Product Feature	
Equipment	Ruggedized 4G LTE M2M & Vehicle Mount Router
Brand Name	BandLuxe
Model Name	K535
FCC ID	UZI-35K888
Integrated WWAN Module	Brand Name: BandLuxe Model Name: M535
EUT supports Radios application	WCDMA/HSPA/LTE WLAN 11b/g/n HT20
HW Version	K1813ME011
EUT Stage	Identical Prototype

1.4 Product Specification subjective to this standard

Product Specification subjective to this standard	
Tx Frequency	LTE Band 2 : 1850.7 MHz ~ 1909.3 MHz LTE Band 4 : 1710.7 MHz ~ 1754.3 MHz LTE Band 12 : 699 MHz ~ 716 MHz LTE Band 17 : 706.5 MHz ~ 713.5 MHz LTE Band 25 : 1850.7MHz ~ 1914.3 MHz
Rx Frequency	LTE Band 2 : 1930.7 MHz ~ 1989.3 MHz LTE Band 4 : 2110.7 MHz ~ 2154.3 MHz LTE Band 12 : 729 MHz ~ 746 MHz LTE Band 17 : 736.5 MHz ~ 743.5 MHz LTE Band 25 : 1930.7MHz ~ 1994.3 MHz
Bandwidth	LTE Band 2 : 1.4MHz / 3MHz / 5MHz / 10MHz / 15MHz / 20MHz LTE Band 4 : 1.4MHz / 3MHz / 5MHz / 10MHz / 15MHz / 20MHz LTE Band 12 : 1.4MHz / 3MHz / 5MHz / 10MHz LTE Band 17 : 5MHz / 10MHz LTE Band 25 : 1.4MHz / 3MHz / 5MHz / 10MHz / 15MHz / 20MHz
Maximum Output Power to Antenna	LTE Band 2 : 22.50 dBm LTE Band 4 : 22.50 dBm LTE Band 12 : 22.45 dBm LTE Band 17 : 22.50 dBm LTE Band 25 : 22.50 dBm
Antenna Gain	LTE Band 2 : 2.00 dBi LTE Band 4 : 2.00 dBi LTE Band 12 : 1.00 dBi LTE Band 17 : 1.00 dBi LTE Band 25 : 2.00 dBi
Type of Modulation	QPSK / 16QAM

1.5 Modification of EUT

No modifications are made to the EUT during all test items.

1.6 Emission Designator

LTE Band 2	QPSK			16QAM		
BW(MHz)	Emission Designator (99%OBW)	Frequency Tolerance (ppm)	Maximum EIRP(W)	Emission Designator (99%OBW)	Frequency Tolerance (ppm)	Maximum EIRP(W)
1.4	1M10G7D	-	0.2773	1M10W7D	-	0.2239
3	2M74G7D	-	0.2812	2M74W7D	-	0.2218
5	4M53G7D	-	0.2812	4M51W7D	-	0.2218
10	9M05G7D	0.0107	0.2812	9M05W7D	-	0.2234
15	13M5G7D	-	0.2818	13M4W7D	-	0.2234
20	18M3G7D	-	0.2786	18M5W7D	-	0.2239
LTE Band 25	QPSK			16QAM		
BW(MHz)	Emission Designator (99%OBW)	Frequency Tolerance (ppm)	Maximum EIRP(W)	Emission Designator (99%OBW)	Frequency Tolerance (ppm)	Maximum EIRP(W)
1.4	1M09G7D	-	0.2799	1M09W7D	-	0.2239
3	2M70G7D	-	0.2818	2M69W7D	-	0.2143
5	4M51G7D	-	0.2818	4M48W7D	-	0.2143
10	8M95G7D	0.0165	0.2818	8M99W7D	-	0.2239
15	13M3G7D	-	0.2818	13M4W7D	-	0.2239
20	18M2G7D	-	0.2818	18M4W7D	-	0.2239
LTE Band 4	QPSK			16QAM		
BW(MHz)	Emission Designator (99%OBW)	Frequency Tolerance (ppm)	Maximum EIRP(W)	Emission Designator (99%OBW)	Frequency Tolerance (ppm)	Maximum EIRP(W)
1.4	1M10G7D	-	0.2818	1M10W7D	-	0.2239
3	2M70G7D	-	0.2818	2M73W7D	-	0.2208
5	4M51G7D	-	0.2805	4M49W7D	-	0.2239
10	9M03G7D	0.0118	0.2606	9M03W7D	-	0.2218
15	13M4G7D	-	0.2642	13M5W7D	-	0.2239
20	18M5G7D	-	0.2754	18M4W7D	-	0.2168

LTE Band 12	QPSK			16QAM		
BW(MHz)	Emission Designator (99%OBW)	Frequency Tolerance (ppm)	Maximum ERP(W)	Emission Designator (99%OBW)	Frequency Tolerance (ppm)	Maximum ERP(W)
1.4	1M10G7D	-	0.1349	1M09W7D	-	0.1072
3	2M73G7D	-	0.1349	2M74W7D	-	0.1084
5	4M51G7D	-	0.1334	4M51W7D	-	0.1067
10	9M09G7D	0.0185	0.1318	9M01W7D	-	0.1054
LTE Band 17	**QPSK**			**16QAM**		
BW(MHz)	**Emission Designator (99%OBW)**	**Frequency Tolerance (ppm)**	**Maximum ERP(W)**	**Emission Designator (99%OBW)**	**Frequency Tolerance (ppm)**	**Maximum ERP(W)**
5	4M51G7D	-	0.1337	4M52W7D	-	0.1074
10	9M05G7D	0.0156	0.1365	9M07W7D	-	0.1081

1.7 Testing Location

Sporton Lab is accredited to ISO 17025 by Taiwan Accreditation Foundation (TAF code : 1190) and the FCC designation No. TW1022 under the FCC 2.948(e) by Mutual Recognition Agreement (MRA) in FCC Test.

Test Site	SPORTON INTERNATIONAL INC.
Test Site Location	No. 52, Hwa Ya 1st Rd., Hwa Ya Technology Park, Kwei-Shan District, Tao Yuan City, Taiwan, R.O.C. TEL: +886-3-327-3456 FAX: +886-3-328-4978
Test Site No.	**Sporton Site No.**
	TH02-HY

Test Site	SPORTON INTERNATIONAL INC.
Test Site Location	No.58, Aly. 75, Ln. 564, Wenhua 3rd Rd. Guishan Dist, Taoyuan City, Taiwan (R.O.C.) TEL: +886-3-327-0868 FAX: +886-3-327-0855
Test Site No.	**Sporton Site No.**
	03CH10-HY

1.8 Applicable Standards

According to the specifications of the manufacturer, the EUT must comply with the requirements of the following standards:

- 47 CFR Part 2, 24(E), 27
- ANSI / TIA / EIA-603-D-2010
- FCC KDB 971168 D01 Power Meas. License Digital Systems v02r02
- FCC KDB 412172 D01 Determining ERP and EIRP v01r01

Remark:

1. All test items were verified and recorded according to the standards and without any deviation during the test.
2. This EUT has also been tested and complied with the requirements of FCC Part 15, Subpart B, recorded in a separate test report.

2 Test Configuration of Equipment Under Test

2.1 Test Mode

Antenna port conducted and radiated test items listed below are performed according to KDB 971168 D01 Power Meas. License Digital Systems v02r02 with maximum output power.

Test Items	Band	Bandwidth (MHz)						Modulation		RB #			Test Channel		
		1.4	3	5	10	15	20	QPSK	16QAM	1	Half	Full	L	M	H
Max. Output Power	2	v	v	v	v	v	v	v	v	v	v	v	v	v	v
	4	v	v	v	v	v	v	v	v	v	v	v	v	v	v
	12	v	v	v	v	-	-	v	v	v	v	v	v	v	v
	17	-	-	v	v	-	-	v	v	v	v	v	v	v	v
	25	v	v	v	v	v	v	v	v	v	v	v	v	v	v
Peak-to-Average Ratio	2						v	v	v	v		v	v	v	v
	4						v	v	v	v		v	v	v	v
	12				v	-	-	v	v	v		v	v	v	v
	17	-	-		v	-	-	v	v	v		v	v	v	v
	25						v	v	v	v		v	v	v	v
26dB and 99% Bandwidth	2	v	v	v	v	v	v	v	v			v	v	v	v
	4	v	v	v	v	v	v	v	v			v	v	v	v
	12	v	v	v	v	-	-	v	v			v	v	v	v
	17	-	-	v	v	-	-	v	v			v	v	v	v
	25	v	v	v	v	v	v	v	v			v	v	v	v
Conducted Band Edge	2	v	v	v	v	v	v	v	v	v		v	v		v
	4	v	v	v	v	v	v	v	v	v		v	v		v
	12	v	v	v	v	-	-	v	v	v		v	v		v
	17	-	-	v	v	-	-	v	v	v		v	v		v
	25	v	v	v	v	v	v	v	v	v		v	v		v

Test Items	Band	Bandwidth (MHz)						Modulation		RB #			Test Channel		
		1.4	3	5	10	15	20	QPSK	16QAM	1	Half	Full	L	M	H
Conducted Spurious Emission	2	v	v	v	v	v	v	v	v	v			v	v	v
	4	v	v	v	v	v	v	v	v	v			v	v	v
	12	v	v	v	v	-	-	v	v	v			v	v	v
	17	-	-	v	v	-	-	v	v	v			v	v	v
	25	v	v	v	v	v	v	v	v	v			v	v	v
Frequency Stability	2				v			v				v		v	
	4				v			v				v		v	
	12				v	-	-	v				v		v	
	17	-	-		v	-	-	v				v		v	
	25				v			v				v		v	
E.R.P./ E.I.R.P.	2	v	v	v	v	v	v	v	v	v			v	v	v
	4	v	v	v	v	v	v	v	v	v			v	v	v
	12	v	v	v	v	v	v	v	v	v			v	v	v
	17	-	-	v	v	-	-	v	v	v			v	v	v
	25	v	v	v	v	v	v	v	v	v			v	v	v
Radiated Spurious Emission	2	v	v	v	v	v	v	v		v	v	v	v	v	v
	4	v	v	v	v	v	v	v		v	v	v	v	v	v
	12	v	v	v	v	-	-	v		v	v	v	v	v	v
	17	-	-	v	v	-	-	v		v	v	v	v	v	v
	25	v	v	v	v	v	v	v		v	v	v	v	v	v
Note	1. The mark "v " means that this configuration is chosen for testing 2. The mark "-" means that this bandwidth is not supported. 3. For E.R.P/E.I.R.P. measurement, the widest bandwidth of each band is chosen for testing due to highest conducted power. Besides, the lowest bandwidth of each band is also measured for reporting only. 4. The device is investigated from 30MHz to 10 times of fundamental signal for radiated spurious emission test under different RB size/offset and modulations in exploratory test. Subsequently, only the worst case emissions are reported.														

2.2 Connection Diagram of Test System

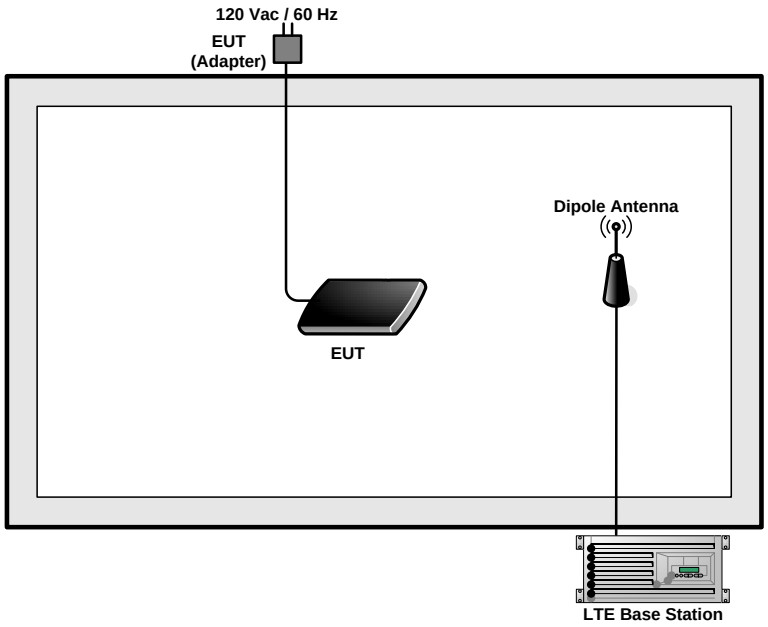

2.3 Support Unit used in test configuration and system

Item	Equipment	Trade Name	Model No.	FCC ID	Data Cable	Power Cord
1.	LTE Base Station	Anritsu	MT8820C	N/A	N/A	Unshielded, 1.8 m

2.4 Measurement Results Explanation Example

For all conducted test items:

The offset level is set in the spectrum analyzer to compensate the RF cable loss and attenuator factor between EUT conducted output port and spectrum analyzer. With the offset compensation, the spectrum analyzer reading level is exactly the EUT RF output level.

The spectrum analyzer offset is derived from RF cable loss and attenuator factor.

Offset = RF cable loss + attenuator factor.

Following shows an offset computation example with cable loss 4.2 dB and 10dB attenuator.

Example :

Offset(dB) = RF cable loss(dB) + attenuator factor(dB).

= 4.2 + 10 = 14.2 (dB)

2.5 Frequency List of Low/Middle/High Channels

LTE Band 2 Channel and Frequency List				
BW [MHz]	Channel/Frequency(MHz)	Lowest	Middle	Highest
20	Channel	18700	18900	19100
	Frequency	1860	1880	1900
15	Channel	18675	18900	19125
	Frequency	1857.5	1880	1902.5
10	Channel	18650	18900	19150
	Frequency	1855	1880	1905
5	Channel	18625	18900	19175
	Frequency	1852.5	1880	1907.5
3	Channel	18615	18900	19185
	Frequency	1851.5	1880	1908.5
1.4	Channel	18607	18900	19193
	Frequency	1850.7	1880	1909.3

LTE Band 4 Channel and Frequency List				
BW [MHz]	Channel/Frequency(MHz)	Lowest	Middle	Highest
20	Channel	20050	20175	20300
	Frequency	1720	1732.5	1745
15	Channel	20025	20175	20325
	Frequency	1717.5	1732.5	1747.5
10	Channel	20000	20175	20350
	Frequency	1715	1732.5	1750
5	Channel	19975	20175	20375
	Frequency	1712.5	1732.5	1752.5
3	Channel	19965	20175	20385
	Frequency	1711.5	1732.5	1753.5
1.4	Channel	19957	20175	20393
	Frequency	1710.7	1732.5	1754.3

LTE Band 12 Channel and Frequency List				
BW [MHz]	Channel/Frequency(MHz)	Lowest	Middle	Highest
10	Channel	23060	23095	23130
	Frequency	704	707.5	711
5	Channel	23035	23095	23155
	Frequency	701.5	707.5	713.5
3	Channel	23025	23095	23165
	Frequency	700.5	707.5	714.5
1.4	Channel	23017	23095	23173
	Frequency	699.7	707.5	715.3

LTE Band 17 Channel and Frequency List				
BW [MHz]	Channel/Frequency(MHz)	Lowest	Middle	Highest
10	Channel	23780	23790	23800
	Frequency	709	710	711
5	Channel	23755	23790	23825
	Frequency	706.5	710	713.5

LTE Band 25 Channel and Frequency List				
BW [MHz]	**Channel/Frequency(MHz)**	**Lowest**	**Middle**	**Highest**
20	Channel	26140	26340	26590
	Frequency	1860	1880	1905
15	Channel	26115	26340	26615
	Frequency	1857.5	1880	1907.5
10	Channel	26090	26340	26640
	Frequency	1855	1880	1910
5	Channel	26065	26340	26665
	Frequency	1852.5	1880	1912.5
3	Channel	26055	26340	26675
	Frequency	1851.5	1880	1913.5
1.4	Channel	26047	26340	26683
	Frequency	1850.7	1880	1914.3

3 Conducted Test Items

3.1 Measuring Instruments

See list of measuring instruments of this test report.

3.2 Test Setup

3.2.1 Conducted Output Power

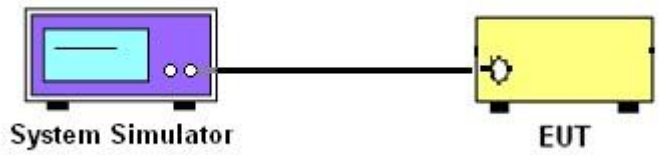

3.2.2 Peak-to-Average Ratio, Occupied Bandwidth ,Conducted Band-Edge and Conducted Spurious Emission

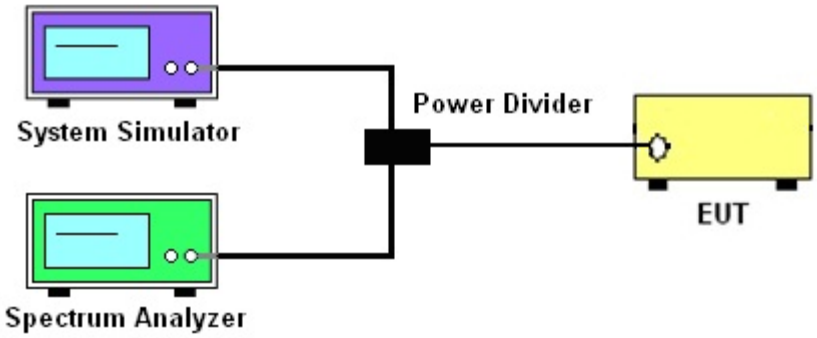

3.2.3 Frequency Stability

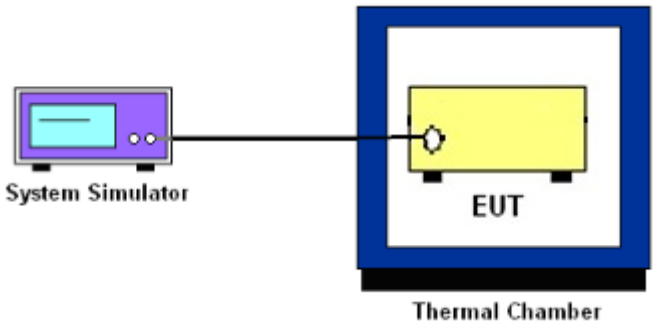

3.3 Test Result of Conducted Test

Please refer to Appendix A.

3.4 Conducted Output Power and ERP/EIRP

3.4.1 Description of the Conducted Output Power Measurement and ERP/EIRP Measurement

A system simulator was used to establish communication with the EUT. Its parameters were set to force the EUT transmitting at maximum output power. The measured power in the radio frequency on the transmitter output terminals shall be reported.

The ERP of mobile transmitters must not exceed 3 Watts for LTE Band 12 and Band 17.

The EIRP of mobile transmitters must not exceed 2 Watts for LTE Band 2 and Band 25.

The EIRP of mobile transmitters must not exceed 1 Watts for LTE Band 4.

According to KDB 412172 D01 Power Approach,

EIRP = $P_T + G_T – L_C$, ERP = EIRP -2.15, where

P_T = transmitter output power in dBm

G_T = gain of the transmitting antenna in dBi

L_C = signal attenuation in the connecting cable between the transmitter and antenna in dB

3.4.2 Test Procedures

1. The transmitter output port was connected to the system simulator.
2. Set EUT at maximum power through the system simulator.
3. Select lowest, middle, and highest channels for each band and different modulation.
4. Measure and record the power level from the system simulator.

3.5 Peak-to-Average Ratio

3.5.1 Description of the PAR Measurement

Power Complementary Cumulative Distribution Function (CCDF) curves provide a means for characterizing the power peaks of a digitally modulated signal on a statistical basis. A CCDF curve depicts the probability of the peak signal amplitude exceeding the average power level. Most contemporary measurement instrumentation include the capability to produce CCDF curves for an input signal provided that the instrument's resolution bandwidth can be set wide enough to accommodate the entire input signal bandwidth. In measuring transmissions in this band using an average power technique, the peak-to-average ratio (PAR) of the transmission may not exceed 13 dB.

3.5.2 Test Procedures

1. The testing follows FCC KDB 971168 v02r02 Section 5.7.1.
2. The EUT was connected to spectrum and system simulator via a power divider.
3. Set the CCDF (Complementary Cumulative Distribution Function) option in spectrum analyzer.
4. The highest RF powers were measured and recorded the maximum PAPR level associated with a probability of 0.1 %.
5. Record the deviation as Peak to Average Ratio.

3.6 Occupied Bandwidth

3.6.1 Description of Occupied Bandwidth Measurement

The occupied bandwidth is the width of a frequency band such that, below the lower and above the upper frequency limits, the mean powers emitted are each equal to a specified percentage 0.5% of the total mean transmitted power.

The 26 dB emission bandwidth is defined as the frequency range between two points, one above and one below the carrier frequency, at which the spectral density of the emission is attenuated 26 dB below the maximum in-band spectral density of the modulated signal. Spectral density (power per unit bandwidth) is to be measured with a detector of resolution bandwidth equal to approximately 1.0% of the emission bandwidth.

3.6.2 Test Procedures

1. The testing follows FCC KDB 971168 v02r02 Section 4.2.
2. The EUT was connected to spectrum analyzer and system simulator via a power divider.
3. The spectrum analyzer center frequency is set to the nominal EUT channel center frequency. The span range for the spectrum analyzer shall be between two and five times the anticipated OBW.
4. The nominal resolution bandwidth (RBW) shall be in the range of 1 to 5 % of the anticipated OBW, and the VBW shall be at least 3 times the RBW.
5. Set the detection mode to peak, and the trace mode to max hold.
6. Determine the reference value: Set the EUT to transmit a modulated signal. Allow the trace to stabilize. Set the spectrum analyzer marker to the highest level of the displayed trace.
   (this is the reference value)
7. Determine the “-26 dB down amplitude” as equal to (Reference Value – X).
8. Place two markers, one at the lowest and the other at the highest frequency of the envelope of the spectral display such that each marker is at or slightly below the “–X dB down amplitude” determined in step 6. If a marker is below this “-X dB down amplitude” value it shall be placed as close as possible to this value. The OBW is the positive frequency difference between the two markers.
9. Use the 99 % power bandwidth function of the spectrum analyzer and report the measured bandwidth.

3.7 Conducted Band Edge

3.7.1 Description of Conducted Band Edge Measurement

24.238 (a) for Band 2, 25

For operations in the 1850-1910 and 1930-1990 MHz band, the FCC limit is 43 + $10\log_{10}$(P[Watts]) dB below the transmitter power P(Watts) in a 1MHz bandwidth. However, in the 1 MHz bands immediately outside and adjacent to the frequency block a resolution bandwidth of at least one percent of the emission bandwidth of the fundamental emission of the transmitter may be employed.

27.53 (g) for Band 12,17

For operations in the 698 -746 MHz band, the FCC limit is 43 + 10log10(P[Watts]) dB below the transmitter power P(Watts) in a 100 kHz bandwidth. However, in the 100 kilohertz bands immediately outside and adjacent to a licensee's frequency block, a resolution bandwidth of at least 30 kHz may be employed.

27.53 (h) for Band 4

For operations in the 1710 – 1755 MHz band, the FCC limit is 43 + $10\log_{10}$(P[Watts]) dB below the transmitter power P(Watts) in a 1 MHz bandwidth. However, in the 1MHz bands immediately outside and adjacent to the licensee's frequency block, a resolution bandwidth of at least one percent of the emission bandwidth of the fundamental emission of the transmitter may be employed.

3.7.2 Test Procedures

1. The testing follows FCC KDB 971168 v02r02 Section 6.0.
2. The EUT was connected to spectrum analyzer and system simulator via a power divider.
3. The band edges of low and high channels for the highest RF powers were measured.
4. Set RBW >= 1% EBW in the 1MHz band immediately outside and adjacent to the band edge.
5. Beyond the 1 MHz band from the band edge, RBW=1MHz was used or a narrower RBW was used and the measured power was integrated over the full required measurement bandwidth of 1 MHz.
6. Set spectrum analyzer with RMS detector.
7. The RF fundamental frequency should be excluded against the limit line in the operating frequency band.
8. Checked that all the results comply with the emission limit line.

   Example:

   The limit line is derived from 43 + 10log(P)dB below the transmitter power P(Watts)

   = P(W)- [43 + 10log(P)] (dB)

   = [30 + 10log(P)] (dBm) - [43 + 10log(P)] (dB) = -13dBm.

3.8 Conducted Spurious Emission

3.8.1 Description of Conducted Spurious Emission Measurement

The power of any emission outside of the authorized operating frequency ranges must be lower than the transmitter power (P) by a factor of at least 43 + 10 log (P) dB.

It is measured by means of a calibrated spectrum analyzer and scanned from 30 MHz up to a frequency including its 10th harmonic.

3.8.2 Test Procedures

1. The testing follows FCC KDB 971168 v02r02 Section 6.0.
2. The EUT was connected to spectrum analyzer and system simulator via a power divider.
3. The RF output of EUT was connected to the spectrum analyzer by RF cable and attenuator. The path loss was compensated to the results for each measurement.
4. The middle channel for the highest RF power within the transmitting frequency was measured.
5. The conducted spurious emission for the whole frequency range was taken.
6. Make the measurement with the spectrum analyzer's RBW = 1MHz, VBW = 3MHz.
7. Set spectrum analyzer with RMS detector.
8. Taking the record of maximum spurious emission.
9. The RF fundamental frequency should be excluded against the limit line in the operating frequency band.
10. The limit line is derived from 43 + 10log(P)dB below the transmitter power P(Watts)
    = P(W)- [43 + 10log(P)] (dB)
    = [30 + 10log(P)] (dBm) - [43 + 10log(P)] (dB)
    = -13dBm.

3.9 Frequency Stability

3.9.1 Description of Frequency Stability Measurement

The frequency stability shall be measured by variation of ambient temperature and variation of primary supply voltage to ensure that the fundamental emission stays within the authorized frequency block. The frequency stability of the transmitter shall be maintained within ±0.00025% (±2.5ppm) of the center frequency.

3.9.2 Test Procedures for Temperature Variation

1. The testing follows FCC KDB 971168 v02r02 Section 9.0.
2. The EUT was set up in the thermal chamber and connected with the system simulator.
3. With power OFF, the temperature was decreased to -30°C and the EUT was stabilized before testing. Power was applied and the maximum change in frequency was recorded within one minute.
4. With power OFF, the temperature was raised in 10°C step up to 50°C. The EUT was stabilized at each step for at least half an hour. Power was applied and the maximum frequency change was recorded within one minute.

3.9.3 Test Procedures for Voltage Variation

1. The testing follows FCC KDB 971168 v02r02 Section 9.0.
2. The EUT was placed in a temperature chamber at 25±5° C and connected with the system simulator.
3. The power supply voltage to the EUT was varied from 85% to 115% of the nominal value measured at the input to the EUT.
4. The variation in frequency was measured for the worst case.

4 Radiated Test Items

4.1 Measuring Instruments

See list of measuring instruments of this test report.

4.2 Test Setup

4.2.1 For radiated test from 30MHz to 1GHz

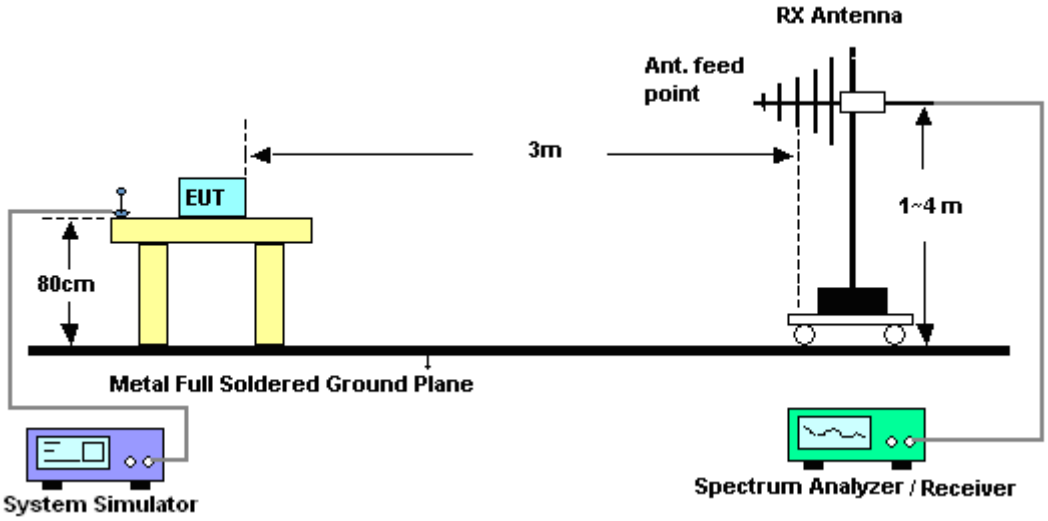

4.2.2 For radiated test above 1GHz

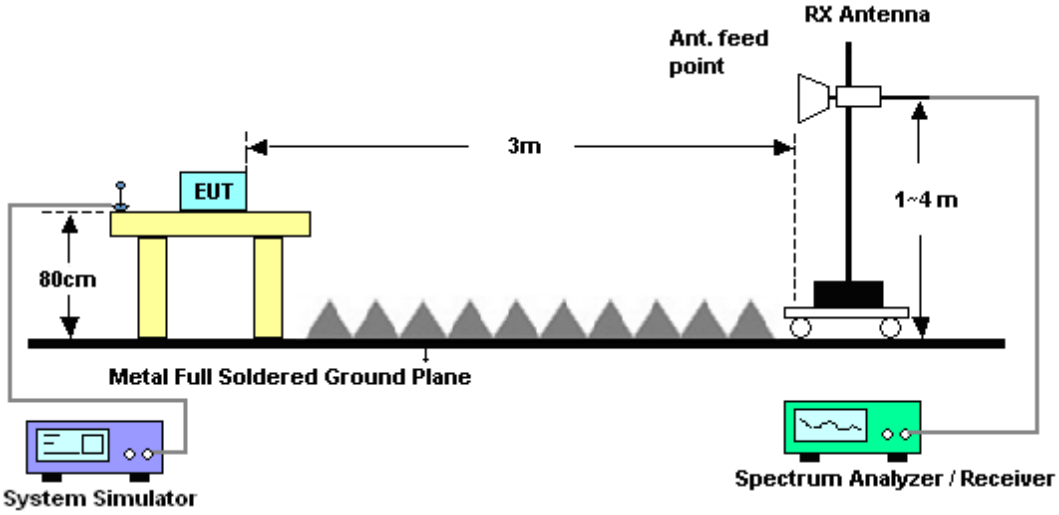

4.3 Test Result of Radiated Test

Please refer to Appendix B.

4.4 Effective Radiated Power and Effective Isotropic Radiated Power

4.4.1 Description of the ERP/EIRP Measurement

Effective radiated power output measurements by substitution method according to ANSI / TIA / EIA-603-D-2010, and the spectrum analyzer configuration follows KDB 971168 D01 Power Meas. License Digital Systems v02r02. Mobile and portable (hand-held) stations operating are limited to average 3 watts with LTE band 12 / 17.

Equivalent isotropic radiated power output measurements by substitution method according to ANSI / TIA / EIA-603-D-2010, and the spectrum analyzer configuration follows KDB 971168 D01 Power Meas. License Digital Systems v02r02. Mobile and portable (hand-held) stations operating are limited to average EIRP of 2 watts with LTE band 2 / 25 and 1 watt with LTE band 4.

4.4.2 Test Procedures

1. The EUT was placed on a non-conductive rotating platform 0.8 meters high in a semi-anechoic chamber. The radiated emission at the fundamental frequency was measured at 3 m with a test antenna and a spectrum analyzer with RMS detector per section 5. of KDB 971168 D01.
2. During the measurement, the system simulator parameters were set to force the EUT transmitting at maximum output power. The maximum emission was recorded from analyzer power level (LVL) from the 360 degrees rotation of the turntable and the test antenna raised and lowered over a range from 1 to 4 meters in both horizontally and vertically polarized orientations.
3. Effective Isotropic Radiated Power (EIRP) was measured by substitution method according to TIA/EIA-603-D. The EUT was replaced by the substitution antenna at same location, and then a known power from S.G. was applied into the dipole antenna through a Tx cable, and then recorded the maximum Analyzer reading through raised and lowered the test antenna. The correction factor (in dB) = S.G. - Tx Cable loss + Substitution antenna gain - Analyzer reading. Then the EUT's EIRP was calculated with the correction factor, EIRP = LVL + Correction factor and ERP = EIRP - 2.15. Take the record of the output power at substitution antenna.

	LTE Average					
LTE BW	1.4M	3M	5M	10M	15M	20M
Span	3MHz	6MHz	10MHz	20MHz	30MHz	40MHz
RBW	30kHz	100kHz	100kHz	300kHz	300kHz	300kHz
VBW	100kHz	300kHz	300kHz	1MHz	1MHz	1MHz
Detector	RMS	RMS	RMS	RMS	RMS	RMS
Trace	Average	Average	Average	Average	Average	Average
Average Type	Power	Power	Power	Power	Power	Power
Sweep Count	100	100	100	100	100	100

	LTE Peak					
LTE BW	1.4M	3M	5M	10M	15M	20M
Span	3MHz	6MHz	10MHz	20MHz	30MHz	40MHz
RBW	30kHz	100kHz	100kHz	300kHz	300kHz	300kHz
VBW	100kHz	300kHz	300kHz	1MHz	1MHz	1MHz
Detector	Peak	Peak	Peak	Peak	Peak	Peak
Trace	Max Hold	Max Hold	Max Hold	Max Hold	Max Hold	Max Hold
Power	Channel	Channel	Channel	Channel	Channel	Channel

4.5 Radiated Spurious Emission

4.5.1 Description of Radiated Spurious Emission

The radiated spurious emission was measured by substitution method according to ANSI / TIA / EIA-603-D-2010. The power of any emission outside of the authorized operating frequency ranges must be attenuated below the transmitter power (P) by a factor of at least 43 + 10 log (P) dB.

For LTE Band 12,17

For operations in the 746-758 MHz, 775-788 MHz, and 805-806 MHz bands, emissions in the band 1559-1610 MHz shall be limited to −70 dBW/MHz equivalent isotropically radiated power (EIRP) for wideband signals, and −80 dBW EIRP for discrete emissions of less than 700 Hz bandwidth.

The spectrum is scanned from 30 MHz up to a frequency including its 10th harmonic.

4.5.2 Test Procedures

1. The testing follows FCC KDB 971168 v02r02 Section 5.8 and ANSI / TIA-603-D-2010 Section 2.2.12.
2. The EUT was placed on a rotatable wooden table with 0.8 meter above ground.
3. The EUT was set 3 meters from the receiving antenna, which was mounted on the antenna tower.
4. The table was rotated 360 degrees to determine the position of the highest spurious emission.
5. The height of the receiving antenna is varied between one meter and four meters to search the maximum spurious emission for both horizontal and vertical polarizations.
6. Make the measurement with the spectrum analyzer's RBW = 1MHz, VBW = 3MHz, taking the record of maximum spurious emission.
7. A horn antenna was substituted in place of the EUT and was driven by a signal generator.
8. Tune the output power of signal generator to the same emission level with EUT maximum spurious emission.
9. Taking the record of output power at antenna port.
10. Repeat step 7 to step 8 for another polarization.
11. The RF fundamental frequency should be excluded against the limit line in the operating frequency band.
    The limit line is derived from 43 + 10log(P)dB below the transmitter power P(Watts)
    = P(W)- [43 + 10log(P)] (dB)
    = [30 + 10log(P)] (dBm) - [43 + 10log(P)] (dB)
    = -13dBm.
12. EIRP (dBm) = S.G. Power – Tx Cable Loss + Tx Antenna Gain
13. ERP (dBm) = EIRP - 2.15

5 List of Measuring Equipment

Instrument	Manufacturer	Model No.	Serial No.	Characteristics	Calibration Date	Test Date	Due Date	Remark
Spectrum Analyzer	Rohde & Schwarz	FSV40	101397	10Hz~40GHz	Sep. 11, 2015	Nov. 06, 2015	Sep. 10 2016	Conducted (TH05-HY)
Temperature Chamber	ESPEC	SH-641	92013720	-30℃~70℃	Dec. 04, 2014	Nov. 06, 2015	Dec. 03, 2015	Conducted (TH05-HY)
Programmable Power Supply	GW Instek	PSS-2005	EL890089	1V~20V 0.5A~5A	Jan. 14, 2015	Nov. 06, 2015	Jan. 13, 2016	Conducted (TH05-HY)
Programmable Power Supply	GW Instek	PSS-2005	EL890094	1V~20V 0.5A~5A	Oct. 12, 2015	Nov. 06, 2015	Oct. 11, 2016	Conducted (TH05-HY)
Amplifier	SONOMA	310N	187311	9kHz~1GHz	Nov. 24, 2014	Nov. 05, 2015 ~ Nov. 10, 2015	Nov. 23, 2015	Radiation (03CH10-HY)
Bilog Antenna	TESEQ	CBL 6111D	35413	30MHz~1GHz	Oct. 31, 2015	Nov. 05, 2015 ~ Nov. 10, 2015	Oct. 30, 2016	Radiation (03CH10-HY)
EMI Test Receiver	Keysight	N9038A	MY54130085	20Hz ~ 8.4GHz	Nov. 04, 2015	Nov. 05, 2015 ~ Nov. 10, 2015	Nov. 03, 2016	Radiation (03CH10-HY)
Horn Antenna	SCHWARZBECK	BBHA 9120 D	9120D-1325	1GHz ~ 18GHz	Sep. 30, 2015	Nov. 05, 2015 ~ Nov. 10, 2015	Sep. 29, 2016	Radiation (03CH10-HY)
Preamplifier	Keysight	83017A	MY53270078	1GHz~26.5GHz	Nov. 20, 2014	Nov. 05, 2015 ~ Nov. 10, 2015	Nov. 19, 2015	Radiation (03CH10-HY)
Spectrum Analyzer	Keysight	N9010A	MY54200485	10Hz ~ 44GHZ	Oct. 15, 2015	Nov. 05, 2015 ~ Nov. 10, 2015	Oct. 14, 2016	Radiation (03CH10-HY)
Antenna Mast	EMEC	AM-BS-450 0-B	N/A	1~4m	N/A	Nov. 05, 2015 ~ Nov. 10, 2015	N/A	Radiation (03CH10-HY)
Turn Table	EMEC	TT 2200	N/A	0-360 degree	N/A	Nov. 05, 2015 ~ Nov. 10, 2015	N/A	Radiation (03CH10-HY)
Horn Antenna	SCHWARZBECK	BBHA 9170	BBHA9170584	18GHz- 40GHz	Nov. 02, 2015	Nov. 05, 2015 ~ Nov. 10, 2015	Nov. 01, 2016	Radiation (03CH10-HY)

6 Uncertainty of Evaluation

Uncertainty of Radiated Emission Measurement (30 MHz ~ 1000 MHz)

Measuring Uncertainty for a Level of Confidence of 95% (U = 2Uc(y))	**4.9**

Uncertainty of Radiated Emission Measurement (1 GHz ~ 40 GHz)

Measuring Uncertainty for a Level of Confidence of 95% (U = 2Uc(y))	**5.5**

Appendix A. Test Results of Conducted Test

Conducted Output Power(Average power)

LTE Band 2 Maximum Average Power [dBm]						
BW [MHz]	RB Size	RB Offset	Mod	Lowest	Middle	Highest
20	1	0	QPSK	22.37	22.44	22.16
20	1	49		22.42	22.42	22.44
20	1	99		22.40	22.08	22.45
20	50	0		21.33	21.49	21.25
20	50	24		21.37	21.33	21.36
20	50	50		21.49	21.00	21.41
20	100	0		21.41	21.24	21.19
20	1	0	16-QAM	21.44	21.10	21.30
20	1	49		21.34	21.45	21.50
20	1	99		21.22	20.90	21.49
20	50	0		20.36	20.50	20.39
20	50	24		20.42	20.37	20.40
20	50	50		20.44	20.02	20.41
20	100	0		20.45	20.38	20.44
15	1	0	QPSK	22.31	22.49	22.38
15	1	37		22.47	22.44	22.49
15	1	74		**22.50**	22.25	22.44
15	36	0		21.32	21.49	21.44
15	36	20		21.23	21.35	21.49
15	36	39		21.40	20.99	21.45
15	75	0		21.25	21.27	21.44
15	1	0	16-QAM	21.44	21.49	21.24
15	1	37		21.45	21.44	21.48
15	1	74		21.44	20.90	20.99
15	36	0		20.41	20.47	20.05
15	36	20		20.35	20.39	20.50
15	36	39		20.41	20.14	20.49
15	75	0		20.26	20.26	20.49

LTE Band 2 Maximum Average Power [dBm]						
BW [MHz]	RB Size	RB Offset	Mod	Lowest	Middle	Highest
10	1	0	QPSK	22.39	22.44	22.45
10	1	25		22.31	22.29	22.44
10	1	49		21.98	22.43	22.49
10	25	0		21.44	21.44	21.49
10	25	12		21.49	21.41	21.44
10	25	25		21.44	21.27	21.48
10	50	0		21.35	21.43	21.50
10	1	0	16-QAM	21.32	20.77	21.44
10	1	25		21.15	21.32	21.49
10	1	49		20.69	20.44	21.10
10	25	0		20.49	20.45	20.49
10	25	12		20.44	20.49	20.50
10	25	25		20.48	20.28	20.44
10	50	0		20.35	20.42	20.47
5	1	0	QPSK	21.77	21.90	22.30
5	1	12		21.90	21.95	22.49
5	1	24		21.69	21.78	22.48
5	12	0		21.14	21.35	21.39
5	12	7		21.22	21.28	21.44
5	12	13		21.19	21.15	21.50
5	25	0		21.23	21.25	21.49
5	1	0	16-QAM	20.92	21.31	21.45
5	1	12		21.38	21.46	21.44
5	1	24		21.18	21.16	21.41
5	12	0		20.32	20.36	20.39
5	12	7		20.31	20.35	20.49
5	12	13		20.25	20.36	20.41
5	25	0		20.26	20.29	19.61

LTE Band 2 Maximum Average Power [dBm]						
BW [MHz]	RB Size	RB Offset	Mod	Lowest	Middle	Highest
3	1	0	QPSK	22.28	22.43	22.40
3	1	8		22.29	22.29	22.49
3	1	14		22.28	22.18	22.41
3	8	0		21.30	21.42	21.13
3	8	4		21.38	21.41	21.13
3	8	7		21.39	21.29	21.40
3	15	0		21.26	21.40	21.39
3	1	0	16-QAM	20.82	21.11	21.46
3	1	8		20.97	21.07	21.44
3	1	14		20.90	20.96	21.42
3	8	0		20.25	20.27	20.44
3	8	4		20.32	20.23	20.11
3	8	7		20.24	20.24	20.49
3	15	0		20.24	20.28	20.50
1.4	1	0	QPSK	22.05	22.29	22.43
1.4	1	3		22.00	22.24	22.40
1.4	1	5		22.01	22.25	22.37
1.4	3	0		21.99	22.22	22.39
1.4	3	1		22.02	22.24	22.39
1.4	3	3		22.00	22.24	22.31
1.4	6	0		21.30	21.33	21.39
1.4	1	0	16-QAM	21.47	21.50	21.49
1.4	1	3		21.49	21.44	21.44
1.4	1	5		21.48	21.41	21.45
1.4	3	0		21.11	21.24	21.31
1.4	3	1		21.15	21.25	21.30
1.4	3	3		21.14	21.23	21.27
1.4	6	0		20.42	20.40	20.46

LTE Band 25 Maximum Average Power [dBm]						
BW [MHz]	RB Size	RB Offset	Mod	Lowest	Middle	Highest
20	1	0	QPSK	22.18	22.50	22.26
20	1	49		22.29	22.02	22.49
20	1	99		22.49	21.88	21.98
20	50	0		21.15	21.37	21.50
20	50	24		21.22	21.02	21.44
20	50	50		21.45	20.70	21.31
20	100	0		21.39	21.25	21.41
20	1	0	16-QAM	21.11	21.36	21.43
20	1	49		21.10	20.91	21.50
20	1	99		21.41	20.77	21.26
20	50	0		20.42	20.35	20.44
20	50	24		20.28	19.97	20.49
20	50	50		20.40	19.72	20.28
20	100	0		20.45	20.21	20.50
15	1	0	QPSK	21.95	22.41	22.50
15	1	37		22.23	21.91	22.44
15	1	74		22.41	21.72	22.49
15	36	0		21.25	21.34	21.50
15	36	20		21.27	21.21	21.49
15	36	39		21.26	20.88	21.35
15	75	0		21.35	21.03	21.24
15	1	0	16-QAM	21.50	21.46	21.44
15	1	37		21.33	21.08	21.45
15	1	74		21.49	20.61	21.49
15	36	0		20.21	20.33	20.50
15	36	20		20.25	20.22	20.44
15	36	39		20.26	19.89	20.32
15	75	0		20.40	20.07	20.25

LTE Band 25 Maximum Average Power [dBm]						
BW [MHz]	RB Size	RB Offset	Mod	Lowest	Middle	Highest
10	1	0	QPSK	22.44	22.25	**22.50**
10	1	25		22.19	22.26	22.24
10	1	49		22.21	21.73	22.40
10	25	0		21.32	21.19	21.41
10	25	12		21.29	21.11	21.14
10	25	25		21.22	20.53	21.23
10	50	0		21.12	20.94	21.42
10	1	0	16-QAM	21.36	21.50	21.41
10	1	25		21.49	21.20	21.46
10	1	49		21.40	20.85	21.21
10	25	0		20.20	20.18	20.24
10	25	12		20.16	20.11	20.21
10	25	25		20.21	19.50	20.13
10	50	0		20.12	19.95	20.45
5	1	0	QPSK	22.28	22.22	21.82
5	1	12		22.16	21.85	22.19
5	1	24		22.21	21.87	**22.50**
5	12	0		21.22	21.14	20.90
5	12	7		21.31	21.25	21.25
5	12	13		21.27	20.76	21.19
5	25	0		21.29	21.08	21.34
5	1	0	16-QAM	21.20	20.92	20.77
5	1	12		21.31	20.92	20.53
5	1	24		21.11	20.32	20.97
5	12	0		20.30	20.20	19.97
5	12	7		20.39	20.33	20.33
5	12	13		20.34	19.85	20.31
5	25	0		20.27	20.10	20.29

LTE Band 25 Maximum Average Power [dBm]						
BW [MHz]	RB Size	RB Offset	Mod	Lowest	Middle	Highest
3	1	0	QPSK	22.28	22.11	22.17
3	1	8		22.19	21.80	22.07
3	1	14		22.20	21.90	**22.50**
3	8	0		21.29	21.21	21.33
3	8	4		21.27	20.91	21.50
3	8	7		21.30	20.81	21.40
3	15	0		21.18	21.20	21.49
3	1	0	16-QAM	21.08	21.16	21.21
3	1	8		21.15	20.97	21.22
3	1	14		20.91	20.73	21.31
3	8	0		20.09	19.97	20.22
3	8	4		20.06	20.03	20.32
3	8	7		20.11	19.94	20.50
3	15	0		20.16	20.24	20.20
1.4	1	0	QPSK	22.30	22.36	22.02
1.4	1	3		22.26	21.80	22.46
1.4	1	5		22.18	22.31	22.41
1.4	3	0		22.28	21.80	22.46
1.4	3	1		22.30	22.33	22.47
1.4	3	3		22.21	22.33	22.44
1.4	6	0		21.31	20.89	21.50
1.4	1	0	16-QAM	21.13	21.30	21.48
1.4	1	3		21.50	21.38	21.47
1.4	1	5		21.44	21.29	21.49
1.4	3	0		21.42	20.85	21.44
1.4	3	1		21.19	20.85	21.40
1.4	3	3		21.34	20.84	21.40
1.4	6	0		20.45	19.99	20.50

LTE Band 4 Maximum Average Power [dBm]						
BW [MHz]	RB Size	RB Offset	Mod	Lowest	Middle	Highest
20	1	0	QPSK	22.08	21.86	21.86
20	1	49		21.98	22.05	21.88
20	1	99		21.82	22.40	21.60
20	50	0		21.08	21.05	21.09
20	50	24		21.00	21.06	20.92
20	50	50		20.95	20.57	20.90
20	100	0		20.70	21.41	20.99
20	1	0	16-QAM	21.36	21.00	21.14
20	1	49		21.14	21.19	21.05
20	1	99		20.98	20.53	21.23
20	50	0		20.20	20.06	20.03
20	50	24		19.99	20.08	20.05
20	50	50		20.02	20.22	19.86
20	100	0		20.33	19.82	20.10
15	1	0	QPSK	22.22	21.96	21.52
15	1	37		22.05	22.19	21.60
15	1	74		22.01	21.61	21.79
15	36	0		21.21	20.94	20.96
15	36	20		20.70	21.00	20.97
15	36	39		21.40	21.14	20.97
15	75	0		21.06	21.37	20.92
15	1	0	16-QAM	21.50	20.87	20.65
15	1	37		21.33	21.04	20.81
15	1	74		21.30	20.84	20.93
15	36	0		20.16	20.55	20.11
15	36	20		19.68	20.00	20.00
15	36	39		20.40	20.23	20.00
15	75	0		20.03	19.70	19.91

LTE Band 4 Maximum Average Power [dBm]						
BW [MHz]	RB Size	RB Offset	Mod	Lowest	Middle	Highest
10	1	0	QPSK	22.16	21.95	21.17
10	1	25		22.02	22.10	21.67
10	1	49		21.91	21.83	21.72
10	25	0		21.11	21.52	20.97
10	25	12		21.17	21.00	20.98
10	25	25		21.06	21.26	21.00
10	50	0		21.09	20.78	20.85
10	1	0	16-QAM	21.00	20.82	21.46
10	1	25		20.81	20.87	20.93
10	1	49		20.85	20.86	20.97
10	25	0		20.19	19.90	19.89
10	25	12		20.18	20.49	19.93
10	25	25		20.14	20.29	19.95
10	50	0		20.06	20.35	19.96
5	1	0	QPSK	22.40	22.07	22.48
5	1	12		21.70	22.03	21.60
5	1	24		21.92	21.99	21.04
5	12	0		21.22	21.01	21.09
5	12	7		21.25	21.11	21.06
5	12	13		21.15	20.95	20.90
5	25	0		21.09	21.59	20.84
5	1	0	16-QAM	21.50	21.36	20.95
5	1	12		21.44	21.47	21.17
5	1	24		21.33	21.40	21.49
5	12	0		20.37	20.07	20.08
5	12	7		20.39	20.19	20.05
5	12	13		20.32	20.01	19.90
5	25	0		20.11	19.99	19.97

LTE Band 4 Maximum Average Power [dBm]						
BW [MHz]	RB Size	RB Offset	Mod	Lowest	Middle	Highest
3	1	0	QPSK	22.50	21.94	22.49
3	1	8		21.91	22.01	21.48
3	1	14		21.80	21.98	22.32
3	8	0		21.24	21.09	21.06
3	8	4		21.23	21.12	20.93
3	8	7		21.23	21.00	20.88
3	15	0		21.13	21.06	20.85
3	1	0	16-QAM	20.61	21.14	21.44
3	1	8		21.11	21.13	20.88
3	1	14		21.01	21.08	20.55
3	8	0		20.19	20.18	19.90
3	8	4		20.09	20.15	19.76
3	8	7		20.19	20.09	19.77
3	15	0		20.14	20.06	19.89
1.4	1	0	QPSK	21.66	22.07	21.53
1.4	1	3		21.68	22.14	21.48
1.4	1	5		22.50	22.15	22.44
1.4	3	0		22.49	22.05	22.49
1.4	3	1		22.41	22.09	21.51
1.4	3	3		22.45	22.08	21.53
1.4	6	0		21.19	21.49	20.88
1.4	1	0	16-QAM	20.84	21.07	20.74
1.4	1	3		21.14	21.07	20.73
1.4	1	5		21.33	21.01	20.68
1.4	3	0		20.70	21.29	20.64
1.4	3	1		20.73	21.30	20.65
1.4	3	3		21.50	21.30	20.62
1.4	6	0		20.23	20.12	19.79

LTE Band 12 Maximum Average Power [dBm]						
BW [MHz]	RB Size	RB Offset	Mod	Lowest	Middle	Highest
10	1	0	QPSK	21.74	22.02	22.35
10	1	25		22.30	22.23	21.99
10	1	49		22.11	21.98	22.30
10	25	0		21.11	21.34	20.96
10	25	12		21.28	21.23	20.99
10	25	25		21.31	21.04	21.10
10	50	0		21.13	21.05	21.03
10	1	0	16-QAM	20.77	21.14	21.38
10	1	25		21.37	21.26	20.98
10	1	49		21.14	20.96	21.25
10	25	0		20.09	20.34	20.01
10	25	12		20.24	20.22	19.92
10	25	25		20.30	20.01	20.07
10	50	0		20.13	20.06	19.97
5	1	0	QPSK	21.60	22.40	21.87
5	1	12		22.20	22.19	22.08
5	1	24		22.29	22.00	22.12
5	12	0		21.03	21.36	20.98
5	12	7		21.11	21.25	21.17
5	12	13		21.22	21.18	21.35
5	25	0		21.08	21.22	21.18
5	1	0	16-QAM	20.55	21.43	20.92
5	1	12		21.29	21.29	21.14
5	1	24		21.41	21.04	21.19
5	12	0		20.14	20.48	19.99
5	12	7		20.22	20.28	20.26
5	12	13		20.33	20.25	20.42
5	25	0		20.10	20.23	20.10

LTE Band 12 Maximum Average Power [dBm]						
BW [MHz]	RB Size	RB Offset	Mod	Lowest	Middle	Highest
3	1	0	QPSK	21.65	22.45	21.89
3	1	8		21.94	22.19	22.32
3	1	14		22.28	22.02	22.05
3	8	0		20.91	21.36	21.30
3	8	4		21.16	21.25	21.35
3	8	7		21.23	21.08	21.27
3	15	0		21.13	21.18	21.34
3	1	0	16-QAM	20.58	21.50	20.93
3	1	8		21.09	21.34	21.38
3	1	14		21.28	21.12	21.16
3	8	0		19.85	20.31	20.09
3	8	4		20.07	20.20	20.40
3	8	7		20.25	20.08	20.33
3	15	0		20.15	20.28	20.37
1.4	1	0	QPSK	21.85	22.45	22.42
1.4	1	3		21.99	22.39	22.41
1.4	1	5		22.08	22.23	22.06
1.4	3	0		21.80	22.40	22.41
1.4	3	1		21.97	22.35	22.38
1.4	3	3		21.97	22.25	22.31
1.4	6	0		20.95	21.32	21.36
1.4	1	0	16-QAM	20.80	21.35	21.32
1.4	1	3		20.93	21.34	21.33
1.4	1	5		21.00	21.22	21.18
1.4	3	0		20.83	21.45	21.42
1.4	3	1		21.04	21.40	21.38
1.4	3	3		21.04	21.33	21.33
1.4	6	0		19.92	20.38	20.43

LTE Band 17 Maximum Average Power [dBm]						
BW [MHz]	RB Size	RB Offset	Mod	Lowest	Middle	Highest
10	1	0	QPSK	22.48	22.50	22.49
10	1	25		22.31	22.20	22.09
10	1	49		22.27	22.47	22.46
10	25	0		21.49	21.46	21.29
10	25	12		21.32	21.19	21.08
10	25	25		21.24	21.25	21.20
10	50	0		21.25	21.29	21.17
10	1	0	16-QAM	21.49	21.40	21.47
10	1	25		21.31	21.21	21.13
10	1	49		21.23	21.45	21.39
10	25	0		20.49	20.44	20.26
10	25	12		20.30	20.18	20.08
10	25	25		20.23	20.16	20.23
10	50	0		20.23	20.19	20.20
5	1	0	QPSK	22.41	22.18	21.83
5	1	12		22.39	21.97	22.00
5	1	24		22.11	21.99	22.15
5	12	0		21.42	21.15	20.94
5	12	7		21.49	21.04	21.15
5	12	13		21.34	20.96	21.33
5	25	0		21.35	20.99	20.98
5	1	0	16-QAM	21.42	21.24	20.86
5	1	12		21.46	21.05	21.02
5	1	24		21.19	21.03	21.15
5	12	0		20.43	20.18	19.99
5	12	7		20.49	20.10	20.16
5	12	13		20.42	20.04	20.27
5	25	0		20.35	19.96	19.98

Appendix B. Test Results of Radiated Test

ERP/EIRP

PCS Band (G_T - L_C = 2.00 dB)						
Modes	LTE Band 2 (QPSK,BW=1.4M)			LTE Band 2 (16QAM,BW=1.4M)		
Channel	18607(Low)	18900 (Mid)	19193 (High)	18607(Low)	18900 (Mid)	19193 (High)
Frequency (MHz)	1850.7	1880	1909.3	1850.7	1880	1909.3
Conducted Power (dBm)	22.05	22.29	22.43	21.49	21.5	21.49
Conducted Power (Watts)	0.16	0.17	0.17	0.14	0.14	0.14
EIRP(dBm)	24.05	24.29	24.43	23.49	23.50	23.49
EIRP(Watts)	0.2541	0.2685	0.2773	0.2234	0.2239	0.2234

PCS Band (G_T - L_C = 2.00 dB)						
Modes	LTE Band 2 (QPSK,BW=3M)			LTE Band 2 (16QAM,BW=3M)		
Channel	18615(Low)	18900 (Mid)	19185 (High)	18615(Low)	18900 (Mid)	19185 (High)
Frequency (MHz)	1851.5	1880	1851.5	1851.5	1880	1851.5
Conducted Power (dBm)	22.29	22.43	22.49	20.97	21.11	21.46
Conducted Power (Watts)	0.17	0.17	0.18	0.13	0.13	0.14
EIRP(dBm)	24.29	24.43	24.49	22.97	23.11	23.46
EIRP(Watts)	0.2685	0.2773	0.2812	0.1982	0.2046	0.2218

PCS Band (G_T - L_C = 2.00 dB)						
Modes	LTE Band 2 (QPSK,BW=5M)			LTE Band 2 (16QAM,BW=5M)		
Channel	18625(Low)	18900 (Mid)	19175 (High)	18625(Low)	18900 (Mid)	19175 (High)
Frequency (MHz)	1852.5	1880	1907.5	1852.5	1880	1907.5
Conducted Power (dBm)	21.9	21.95	22.49	21.38	21.46	21.45
Conducted Power (Watts)	0.15	0.16	0.18	0.14	0.14	0.14
EIRP(dBm)	23.90	23.95	24.49	23.38	23.46	23.45
EIRP(Watts)	0.2455	0.2483	0.2812	0.2178	0.2218	0.2213

PCS Band (G_T - L_C = 2.00 dB)						
Modes	LTE Band 2 (QPSK,BW=10M)			LTE Band 2 (16QAM,BW=10M)		
Channel	18650(Low)	18900 (Mid)	19150 (High)	18650(Low)	18900 (Mid)	19150 (High)
Frequency (MHz)	1855	1880	1905	1855	1880	1905
Conducted Power (dBm)	22.39	22.44	22.49	21.32	21.32	21.49
Conducted Power (Watts)	0.17	0.18	0.18	0.14	0.14	0.14
EIRP(dBm)	24.39	24.44	24.49	23.32	23.32	23.49
EIRP(Watts)	0.2748	0.2780	0.2812	0.2148	0.2148	0.2234

PCS Band (G_T - L_C = 2.00 dB)						
Modes	LTE Band 2 (QPSK,BW=15M)			LTE Band 2 (16QAM,BW=15M)		
Channel	18675(Low)	18900 (Mid)	19125 (High)	18675(Low)	18900 (Mid)	19125 (High)
Frequency (MHz)	1857.5	1880	1902.5	1857.5	1880	1902.5
Conducted Power (dBm)	22.5	22.49	22.49	21.45	21.49	21.48
Conducted Power (Watts)	0.18	0.18	0.18	0.14	0.14	0.14
EIRP(dBm)	24.5	24.49	24.49	23.45	23.49	23.48
EIRP(Watts)	0.2818	0.2812	0.2812	0.2213	0.2234	0.2228

PCS Band (G_T - L_C = 2.00 dB)						
Modes	LTE Band 2 (QPSK,BW=20M)			LTE Band 2 (16QAM,BW=20M)		
Channel	18700(Low)	18900 (Mid)	19100 (High)	18700(Low)	18900 (Mid)	19100 (High)
Frequency (MHz)	1860	1880	1900	1860	1880	1900
Conducted Power (dBm)	22.42	22.44	22.45	21.44	21.45	21.5
Conducted Power (Watts)	0.17	0.18	0.18	0.14	0.14	0.14
EIRP(dBm)	24.42	24.44	24.45	23.44	23.45	23.5
EIRP(Watts)	0.2767	0.2780	0.2786	0.2208	0.2213	0.2239

PCS Band (G_T - L_C = 2.00 dB)						
Modes	LTE Band 25 (QPSK,BW=1.4M)			LTE Band 25 (16QAM,BW=1.4M)		
Channel	26047 (Low)	26365 (Mid)	26683 (High)	26047 (Low)	26365 (Mid)	26683 (High)
Frequency (MHz)	1850.7	1882.5	1914.3	1850.7	1882.5	1914.3
Conducted Power (dBm)	22.3	22.36	22.47	21.5	21.38	21.49
Conducted Power (Watts)	0.17	0.17	0.18	0.14	0.14	0.14
EIRP(dBm)	24.30	24.36	24.47	23.50	23.38	23.49
EIRP(Watts)	0.2692	0.2729	0.2799	0.2239	0.2178	0.2234

PCS Band (G_T - L_C = 2.00 dB)						
Modes	LTE Band 25 (QPSK,BW=3M)			LTE Band 25 (16QAM,BW=3M)		
Channel	26055 (Low)	26365 (Mid)	26675 (High)	26055 (Low)	26365 (Mid)	26675 (High)
Frequency (MHz)	1851.5	1882.5	1913.5	1851.5	1882.5	1913.5
Conducted Power (dBm)	22.28	22.11	22.5	21.15	21.16	21.31
Conducted Power (Watts)	0.17	0.16	0.18	0.13	0.13	0.14
EIRP(dBm)	24.28	24.11	24.50	23.15	23.16	23.31
EIRP(Watts)	0.2679	0.2576	0.2818	0.2065	0.2070	0.2143

PCS Band (G_T - L_C = 2.00 dB)						
Modes	LTE Band 25 (QPSK,BW=5M)			LTE Band 25 (16QAM,BW=5M)		
Channel	26065 (Low)	26365 (Mid)	26665 (High)	26065 (Low)	26365 (Mid)	26665 (High)
Frequency (MHz)	1852.5	1882.5	1912.5	1852.5	1882.5	1912.5
Conducted Power (dBm)	22.28	22.22	22.5	21.31	20.92	20.97
Conducted Power (Watts)	0.17	0.17	0.18	0.14	0.12	0.13
EIRP(dBm)	24.28	24.22	24.50	23.31	22.92	22.97
EIRP(Watts)	0.2679	0.2642	0.2818	0.2143	0.1959	0.1982

PCS Band (G_T - L_C = 2.00 dB)						
Modes	LTE Band 25 (QPSK,BW=10M)			LTE Band 25 (16QAM,BW=10M)		
Channel	26090 (Low)	26365 (Mid)	26640 (High)	26090 (Low)	26365 (Mid)	26640 (High)
Frequency (MHz)	1855	1882.5	1910	1855	1882.5	1910
Conducted Power (dBm)	22.44	22.26	22.5	21.49	21.5	21.46
Conducted Power (Watts)	0.18	0.17	0.18	0.14	0.14	0.14
EIRP(dBm)	24.44	24.26	24.5	23.49	23.5	23.46
EIRP(Watts)	0.2780	0.2667	0.2818	0.2234	0.2239	0.2218

PCS Band (G_T - L_C = 2.00 dB)						
Modes	LTE Band 25 (QPSK,BW=15M)			LTE Band 25 (16QAM,BW=15M)		
Channel	26115 (Low)	26365 (Mid)	26615 (High)	26115 (Low)	26365 (Mid)	26615 (High)
Frequency (MHz)	1857.5	1882.5	1907.5	1857.5	1882.5	1907.5
Conducted Power (dBm)	22.41	22.41	22.5	21.5	21.46	21.49
Conducted Power (Watts)	0.17	0.17	0.18	0.14	0.14	0.14
EIRP(dBm)	24.41	24.41	24.5	23.5	23.46	23.49
EIRP(Watts)	0.2761	0.2761	0.2818	0.2239	0.2218	0.2234

PCS Band (G_T - L_C = 2.00 dB)						
Modes	LTE Band 25 (QPSK,BW=20M)			LTE Band 25 (16QAM,BW=20M)		
Channel	26140 (Low)	26365 (Mid)	26590 (High)	26140 (Low)	26365 (Mid)	26590 (High)
Frequency (MHz)	1860	1882.5	1905	1860	1882.5	1905
Conducted Power (dBm)	22.49	22.5	22.49	21.41	21.36	21.5
Conducted Power (Watts)	0.18	0.18	0.18	0.14	0.14	0.14
EIRP(dBm)	24.49	24.5	24.49	23.41	23.36	23.5
EIRP(Watts)	0.2812	0.2818	0.2812	0.2193	0.2168	0.2239

PCS Band (G_T - L_C = 2.00 dB)						
Modes	LTE Band 4 (QPSK,BW=1.4M)			LTE Band 4 (16QAM,BW=1.4M)		
Channel	19957 (Low)	20175 (Mid)	20393 (High)	19957 (Low)	20175 (Mid)	20393 (High)
Frequency (MHz)	1710.7	1732.5	1754.3	1710.7	1732.5	1754.3
Conducted Power (dBm)	22.5	22.15	22.49	21.5	21.3	20.74
Conducted Power (Watts)	0.18	0.16	0.18	0.14	0.13	0.12
EIRP(dBm)	24.50	24.15	24.49	23.50	23.30	22.74
EIRP(Watts)	0.2818	0.2600	0.2812	0.2239	0.2138	0.1879

PCS Band (G_T - L_C = 2.00 dB)						
Modes	LTE Band 4 (QPSK,BW=3M)			LTE Band 4 (16QAM,BW=3M)		
Channel	19965(Low)	20175 (Mid)	20385 (High)	19965(Low)	20175 (Mid)	20385 (High)
Frequency (MHz)	1711.5	1732.5	1753.5	1711.5	1732.5	1753.5
Conducted Power (dBm)	22.5	22.01	22.49	21.11	21.14	21.44
Conducted Power (Watts)	0.18	0.16	0.18	0.13	0.13	0.14
EIRP(dBm)	24.50	24.01	24.49	23.11	23.14	23.44
EIRP(Watts)	0.2818	0.2518	0.2812	0.2046	0.2061	0.2208

PCS Band (G_T - L_C = 2.00 dB)						
Modes	LTE Band 4 (QPSK,BW=5M)			LTE Band 4 (16QAM,BW=5M)		
Channel	19975(Low)	20175 (Mid)	20375 (High)	19975(Low)	20175 (Mid)	20375 (High)
Frequency (MHz)	1712.5	1732.5	1752.5	1712.5	1732.5	1752.5
Conducted Power (dBm)	22.4	22.07	22.48	21.5	21.47	21.49
Conducted Power (Watts)	0.17	0.16	0.18	0.14	0.14	0.14
EIRP(dBm)	24.40	24.07	24.48	23.50	23.47	23.49
EIRP(Watts)	0.2754	0.2553	0.2805	0.2239	0.2223	0.2234

PCS Band (G_T - L_C = 2.00 dB)						
Modes	LTE Band 4 (QPSK,BW=10M)			LTE Band 4 (16QAM,BW=10M)		
Channel	20000 (Low)	20175 (Mid)	20350 (High)	20000 (Low)	20175 (Mid)	20350 (High)
Frequency (MHz)	1715	1732.5	1750	1715	1732.5	1750
Conducted Power (dBm)	22.16	22.1	21.72	21	20.87	21.46
Conducted Power (Watts)	0.16	0.16	0.15	0.13	0.12	0.14
EIRP(dBm)	24.16	24.1	23.72	23	22.87	23.46
EIRP(Watts)	0.2606	0.2570	0.2355	0.1995	0.1936	0.2218

PCS Band (G_T - L_C = 2.00 dB)						
Modes	LTE Band 4 (QPSK,BW=15M)			LTE Band 4 (16QAM,BW=15M)		
Channel	20025 (Low)	20175 (Mid)	20325 (High)	20025 (Low)	20175 (Mid)	20325 (High)
Frequency (MHz)	1717.5	1732.5	1747.5	1717.5	1732.5	1747.5
Conducted Power (dBm)	22.22	22.19	21.79	21.5	21.04	20.93
Conducted Power (Watts)	0.17	0.17	0.15	0.14	0.13	0.12
EIRP(dBm)	24.22	24.19	23.79	23.5	23.04	22.93
EIRP(Watts)	0.2642	0.2624	0.2393	0.2239	0.2014	0.1963

PCS Band (G_T - L_C = 2.00 dB)						
Modes	LTE Band 4 (QPSK,BW=20M)			LTE Band 4 (16QAM,BW=20M)		
Channel	20050 (Low)	20175 (Mid)	20300 (High)	20050 (Low)	20175 (Mid)	20300 (High)
Frequency (MHz)	1720	1732.5	1745	1720	1732.5	1745
Conducted Power (dBm)	22.08	22.4	21.88	21.36	21.19	21.23
Conducted Power (Watts)	0.16	0.17	0.15	0.14	0.13	0.13
EIRP(dBm)	24.08	24.4	23.88	23.36	23.19	23.23
EIRP(Watts)	0.2559	0.2754	0.2443	0.2168	0.2084	0.2104

Cellular Band (G_T - L_C = 1.00 dB)						
Modes	LTE Band 12 (QPSK,BW=1M)			LTE Band 12 (16QAM,BW=1M)		
Channel	23017 (Low)	23095 (Mid)	23173 (High)	23017 (Low)	23095 (Mid)	23173 (High)
Frequency (MHz)	699.7	707.5	715.3	699.7	707.5	715.3
Conducted Power (dBm)	22.08	22.45	22.42	21.04	21.45	21.42
Conducted Power (Watts)	0.16	0.18	0.17	0.13	0.14	0.14
ERP(dBm)	20.93	21.30	21.27	19.89	20.30	20.27
ERP(Watts)	0.1239	0.1349	0.1340	0.0975	0.1072	0.1064

Cellular Band (G_T - L_C = 1.00 dB)						
Modes	LTE Band 12 (QPSK,BW=3M)			LTE Band 12 (16QAM,BW=3M)		
Channel	23025 (Low)	23095 (Mid)	23165 (High)	23025 (Low)	23095 (Mid)	23165 (High)
Frequency (MHz)	700.5	707.5	714.5	700.5	707.5	714.5
Conducted Power (dBm)	22.28	22.45	22.32	21.28	21.5	21.38
Conducted Power (Watts)	0.17	0.18	0.17	0.13	0.14	0.14
ERP(dBm)	21.13	21.30	21.17	20.13	20.35	20.23
ERP(Watts)	0.1297	0.1349	0.1309	0.1030	0.1084	0.1054

Cellular Band (G_T - L_C = 1.00 dB)						
Modes	**LTE Band 12 (QPSK,BW=5M)**			**LTE Band 12 (16QAM,BW=5M)**		
Channel	**23035 (Low)**	**23095 (Mid)**	**23155 (High)**	**23035 (Low)**	**23095 (Mid)**	**23155 (High)**
Frequency (MHz)	**701.5**	**707.5**	**713.5**	**701.5**	**707.5**	**713.5**
Conducted Power (dBm)	22.29	22.4	22.12	21.41	21.43	21.19
Conducted Power (Watts)	0.17	0.17	0.16	0.14	0.14	0.13
ERP(dBm)	21.14	21.25	20.97	20.26	20.28	20.04
ERP(Watts)	0.1300	0.1334	0.1250	0.1062	0.1067	0.1009

Cellular Band (G_T - L_C = 1.00 dB)						
Modes	**LTE Band 12 (QPSK,BW=10M)**			**LTE Band 12 (16QAM,BW=10M)**		
Channel	**23060 (Low)**	**23095 (Mid)**	**23130 (High)**	**23060 (Low)**	**23095 (Mid)**	**23130 (High)**
Frequency (MHz)	**704**	**707.5**	**711**	**704**	**707.5**	**711**
Conducted Power (dBm)	22.3	22.23	22.35	21.37	21.26	21.38
Conducted Power (Watts)	0.17	0.17	0.17	0.14	0.13	0.14
ERP(dBm)	21.15	21.08	21.2	20.22	20.11	20.23
ERP(Watts)	0.1303	0.1282	0.1318	0.1052	0.1026	0.1054

Cellular Band (G_T - L_C = 1.00 dB)						
Modes	LTE Band 17 (QPSK,BW=5M)			LTE Band 17 (16QAM,BW=5M)		
Channel	23755(Low)	23790 (Mid)	23825 (High)	23755(Low)	23790 (Mid)	23825 (High)
Frequency (MHz)	706.5	710	713.5	706.5	710	713.5
Conducted Power (dBm)	22.41	22.18	22.15	21.46	21.24	21.15
Conducted Power (Watts)	0.17	0.17	0.16	0.14	0.13	0.13
ERP(dBm)	21.26	21.03	21.00	20.31	20.09	20.00
ERP(Watts)	0.1337	0.1268	0.1259	0.1074	0.1021	0.1000

Cellular Band (G_T - L_C = 1.00 dB)						
Modes	LTE Band 17 (QPSK,BW=10M)			LTE Band 17 (16QAM,BW=10M)		
Channel	23780(Low)	23790 (Mid)	23800 (High)	23780(Low)	23790 (Mid)	23800 (High)
Frequency (MHz)	709	710	711	709	710	711
Conducted Power (dBm)	22.48	22.5	22.49	21.49	21.45	21.47
Conducted Power (Watts)	0.18	0.18	0.18	0.14	0.14	0.14
ERP(dBm)	21.33	21.35	21.34	20.34	22.45	20.32
ERP(Watts)	0.1358	0.1365	0.1361	0.1081	0.176	0.108

Radiated Spurious Emission

LTE Band 2 / 1.4MHz / QPSK / RB Size 1 Offset 0									
Channel	Frequency (MHz)	EIRP (dBm)	Limit (dBm)	Over Limit (dB)	SPA Reading (dBm)	S.G. Power (dBm)	TX Cable loss (dB)	TX Antenna Gain (dBi)	Polarization (H/V)
Lowest	3700	-45.11	-13	-32.11	-63.82	-51.68	1.67	8.24	H
	5548	-53.94	-13	-40.94	-77.59	-61.01	2.65	9.72	H
	7403	-47.74	-13	-34.74	-76.59	-56.89	2.46	11.61	H
									H
									H
									H
	3700	-40.64	-13	-27.64	-59.14	-47.21	1.67	8.24	V
	5548	-54.41	-13	-41.41	-76.55	-61.48	2.65	9.72	V
	7403	-48.16	-13	-35.16	-76.18	-57.31	2.46	11.61	V
									V
									V
									V
Middle	3763	-49.04	-13	-36.04	-67.19	-55.67	1.69	8.32	H
	5646	-54.24	-13	-41.24	-76.96	-61.29	2.71	9.76	H
	7529	-49.16	-13	-36.16	-76.8	-58.56	2.42	11.82	H
									H
									H
									H
	3763	-43.68	-13	-30.68	-61.29	-50.31	1.69	8.32	V
	5646	-55.59	-13	-42.59	-76.88	-62.64	2.71	9.76	V
	7529	-49.36	-13	-36.36	-76.62	-58.76	2.42	11.82	V
									V
									V
									V
Highest	3819	-41.75	-13	-28.75	-62.49	-48.43	1.70	8.38	H
	5730	-51.64	-13	-38.64	-76.91	-58.67	2.76	9.79	H
	7641	-47.24	-13	-34.24	-76.8	-56.74	2.38	11.88	H
									H
									H
									H
	3819	-37.61	-13	-24.61	-57.45	-44.29	1.70	8.38	V
	5730	-52.23	-13	-39.23	-76.52	-59.26	2.76	9.79	V
	7641	-47.79	-13	-34.79	-76.88	-57.29	2.38	11.88	V
									V
									V
									V

Remark: Spurious emissions within 30-1000MHz were found more than 20dB below limit line.

LTE Band 2 / 3MHz / QPSK / RB Size 1 Offset 0									
Channel	Frequency (MHz)	EIRP (dBm)	Limit (dBm)	Over Limit (dB)	SPA Reading (dBm)	S.G. Power (dBm)	TX Cable loss (dB)	TX Antenna Gain (dBi)	Polarization (H/V)
Lowest	3700	-59.39	-13	-46.39	-64.04	-65.96	1.67	8.24	H
	5499	-67.37	-13	-54.37	-77.22	-74.45	2.62	9.70	H
	7403	-61.30	-13	-48.30	-76.14	-70.45	2.46	11.61	H
									H
									H
									H
	3700	-40.04	-13	-27.04	-57.58	-46.61	1.67	8.24	V
	5499	-55.77	-13	-42.77	-77.31	-62.85	2.62	9.70	V
	7403	-48.34	-13	-35.34	-75.39	-57.49	2.46	11.61	V
									V
									V
									V
Middle	3756	-45.11	-13	-32.11	-65.13	-51.73	1.68	8.31	H
	5632	-54.44	-13	-41.44	-77.04	-61.49	2.70	9.75	H
	7515	-47.11	-13	-34.11	-74.82	-56.49	2.42	11.81	H
									H
									H
									H
	3756	-54.82	-13	-41.82	-59.46	-61.44	1.68	8.31	V
	5632	-68.83	-13	-55.83	-76.92	-75.88	2.70	9.75	V
	7515	-60.60	-13	-47.60	-74.94	-69.98	2.42	11.81	V
									V
									V
									V
Highest	3812	-45.07	-13	-32.07	-65.63	-51.74	1.70	8.37	H
	5718	-51.86	-13	-38.86	-77.29	-58.9	2.75	9.79	H
	7627	-58.76	-13	-45.76	-75.22	-68.25	2.39	11.88	H
									H
									H
									H
	3812	-53.21	-13	-40.21	-59.91	-59.88	1.70	8.37	V
	5718	-65.57	-13	-52.57	-76.7	-72.61	2.75	9.79	V
	7627	-59.30	-13	-46.30	-75.4	-68.79	2.39	11.88	V
									V
									V
									V

Remark: Spurious emissions within 30-1000MHz were found more than 20dB below limit line.

LTE Band 2 / 5MHz / QPSK / RB Size 1 Offset 0									
Channel	Frequency (MHz)	EIRP (dBm)	Limit (dBm)	Over Limit (dB)	SPA Reading (dBm)	S.G. Power (dBm)	TX Cable loss (dB)	TX Antenna Gain (dBi)	Polarization (H/V)
Lowest	3700	-58.60	-13	-45.60	-63.25	-65.17	1.67	8.24	H
	5499	-54.21	-13	-41.21	-77.06	-61.29	2.62	9.70	H
	7361	-43.03	-13	-30.03	-70.75	-52.08	2.47	11.52	H
									H
									H
									H
	3700	-51.50	-13	-38.50	-56.04	-58.07	1.67	8.24	V
	5499	-68.75	-13	-55.75	-77.13	-75.83	2.62	9.70	V
	7361	-61.30	-13	-48.30	-75.42	-70.35	2.47	11.52	V
									V
									V
									V
Middle	3756	-48.24	-13	-35.24	-66.26	-54.86	1.68	8.31	H
	5632	-54.30	-13	-41.30	-76.9	-61.35	2.70	9.75	H
	7515	-47.00	-13	-34.00	-74.71	-56.38	2.42	11.81	H
									H
									H
									H
	3756	-42.19	-13	-29.19	-59.81	-48.81	1.68	8.31	V
	5632	-55.74	-13	-42.74	-76.83	-62.79	2.70	9.75	V
	7515	-48.17	-13	-35.17	-75.51	-57.55	2.42	11.81	V
									V
									V
									V
Highest	3812	-46.68	-13	-33.68	-67.25	-53.35	1.70	8.37	H
	5716	-51.93	-13	-38.93	-77.13	-58.97	2.75	9.79	H
	7361	-46.15	-13	-33.15	-76.02	-55.2	2.47	11.52	H
									H
									H
									H
	3812	-41.38	-13	-28.38	-61.08	-48.05	1.70	8.37	V
	5716	-53.05	-13	-40.05	-77.18	-60.09	2.75	9.79	V
	7361	-42.20	-13	-29.20	-71.47	-51.25	2.47	11.52	V
									V
									V
									V

Remark: Spurious emissions within 30-1000MHz were found more than 20dB below limit line.

LTE Band 2 / 10MHz / QPSK / RB Size 1 Offset 0									
Channel	Frequency (MHz)	EIRP (dBm)	Limit (dBm)	Over Limit (dB)	SPA Reading (dBm)	S.G. Power (dBm)	TX Cable loss (dB)	TX Antenna Gain (dBi)	Polarization (H/V)
Lowest	3700	-45.34	-13	-32.34	-63.59	-51.91	1.67	8.24	H
	5500	-54.38	-13	-41.38	-77.24	-61.45	2.63	9.70	H
	7403	-48.29	-13	-35.29	-76.13	-57.44	2.46	11.61	H
									H
									H
									H
	3700	-52.37	-13	-39.37	-56.91	-58.94	1.67	8.24	V
	5500	-68.53	-13	-55.53	-76.91	-75.6	2.63	9.70	V
	7403	-60.80	-13	-47.80	-74.85	-69.95	2.46	11.61	V
									V
									V
									V
Middle	3749	-47.86	-13	-34.86	-65.88	-54.48	1.68	8.30	H
	5624	-54.08	-13	-41.08	-76.78	-61.13	2.70	9.75	H
	7501	-47.16	-13	-34.16	-74.93	-56.53	2.43	11.80	H
									H
									H
									H
	3749	-42.33	-13	-29.33	-59.95	-48.95	1.68	8.30	V
	5624	-55.22	-13	-42.22	-76.31	-62.27	2.70	9.75	V
	7501	-48.10	-13	-35.10	-75.51	-57.47	2.43	11.80	V
									V
									V
									V
Highest	3805	-48.82	-13	-35.82	-69.39	-55.49	1.70	8.37	H
	5709	-51.63	-13	-38.63	-76.83	-58.67	2.75	9.78	H
	7613	-46.79	-13	-33.79	-76.34	-56.26	2.39	11.87	H
									H
									H
									H
	3805	-55.84	-13	-42.84	-62.54	-62.51	1.70	8.37	V
	5709	-65.91	-13	-52.91	-77.04	-72.95	2.75	9.78	V
	7613	-60.19	-13	-47.19	-76.3	-69.66	2.39	11.87	V
									V
									V
									V

Remark: Spurious emissions within 30-1000MHz were found more than 20dB below limit line.

LTE Band 2 / 15MHz / QPSK / RB Size 1 Offset 0									
Channel	Frequency (MHz)	EIRP (dBm)	Limit (dBm)	Over Limit (dB)	SPA Reading (dBm)	S.G. Power (dBm)	TX Cable loss (dB)	TX Antenna Gain (dBi)	Polarization (H/V)
Lowest	3700	-58.44	-13	-45.44	-62.99	-65.01	1.67	8.24	H
	5550	-67.82	-13	-54.82	-77.49	-74.89	2.65	9.72	H
	7400	-62.01	-13	-49.01	-76.85	-71.15	2.46	11.60	H
									H
									H
									H
	3700	-53.12	-13	-40.12	-57.66	-59.69	1.67	8.24	V
	5550	-69.40	-13	-56.40	-77.53	-76.47	2.65	9.72	V
	7400	-61.52	-13	-48.52	-75.57	-70.66	2.46	11.60	V
									V
									V
									V
Middle	3749	-59.61	-13	-46.61	-64.67	-66.23	1.68	8.30	H
	5625	-67.09	-13	-54.09	-76.69	-74.14	2.70	9.75	H
	7501	-61.72	-13	-48.72	-76.47	-71.09	2.43	11.80	H
									H
									H
									H
	3749	-54.68	-13	-41.68	-59.29	-61.3	1.68	8.30	V
	5625	-68.68	-13	-55.68	-76.77	-75.73	2.70	9.75	V
	7501	-61.84	-13	-48.84	-76.25	-71.21	2.43	11.80	V
									V
									V
									V
Highest	3791	-58.62	-13	-45.62	-66.06	-65.27	1.70	8.35	H
	5688	-64.68	-13	-51.68	-76.81	-71.72	2.73	9.78	H
	7585	-59.51	-13	-46.51	-76.11	-68.96	2.40	11.85	H
									H
									H
									H
	3791	-55.51	-13	-42.51	-62.23	-62.16	1.70	8.35	V
	5688	-65.50	-13	-52.50	-76.47	-72.54	2.73	9.78	V
	7585	-59.70	-13	-46.70	-75.89	-69.15	2.40	11.85	V
									V
									V
									V

Remark: Spurious emissions within 30-1000MHz were found more than 20dB below limit line.

LTE Band 2 / 20MHz / QPSK / RB Size 1 Offset 0									
Channel	Frequency (MHz)	EIRP (dBm)	Limit (dBm)	Over Limit (dB)	SPA Reading (dBm)	S.G. Power (dBm)	TX Cable loss (dB)	TX Antenna Gain (dBi)	Polarization (H/V)
Lowest	3700	-47.22	-13	-34.22	-64.87	-53.79	1.67	8.24	H
	5548	-54.95	-13	-41.95	-77.62	-62.02	2.65	9.72	H
	7403	-48.71	-13	-35.71	-76.55	-57.86	2.46	11.61	H
									H
									H
									H
	3700	-53.78	-13	-40.78	-58.32	-60.35	1.67	8.24	V
	5548	-56.32	-13	-43.32	-77.47	-63.39	2.65	9.72	V
	7403	-48.26	-13	-35.26	-75.31	-57.41	2.46	11.61	V
									V
									V
									V
Middle	3742	-57.32	-13	-44.32	-62.23	-63.93	1.68	8.29	H
	5611	-67.69	-13	-54.69	-77.18	-74.75	2.69	9.74	H
	7487	-60.40	-13	-47.40	-75.17	-69.74	2.43	11.77	H
									H
									H
									H
	3742	-39.21	-13	-26.21	-56.79	-45.82	1.68	8.29	V
	5611	-55.24	-13	-42.24	-76.12	-62.3	2.69	9.74	V
	7487	-48.41	-13	-35.41	-75.82	-57.75	2.43	11.77	V
									V
									V
									V
Highest	3784	-56.04	-13	-43.04	-63.48	-62.69	1.69	8.34	H
	5674	-65.06	-13	-52.06	-77.11	-72.1	2.73	9.77	H
	7571	-59.78	-13	-46.78	-76.38	-69.22	2.41	11.84	H
									H
									H
									H
	3784	-51.98	-13	-38.98	-58.7	-58.63	1.69	8.34	V
	5674	-53.18	-13	-40.18	-76.99	-60.22	2.73	9.77	V
	7571	-47.30	-13	-34.30	-76.39	-56.74	2.41	11.84	V
									V
									V
									V

Remark: Spurious emissions within 30-1000MHz were found more than 20dB below limit line.

LTE Band 25 / 1.4MHz / QPSK / RB Size 1 Offset 0									
Channel	Frequency (MHz)	EIRP (dBm)	Limit (dBm)	Over Limit (dB)	SPA Reading (dBm)	S.G. Power (dBm)	TX Cable loss (dB)	TX Antenna Gain (dBi)	Polarization (H/V)
Highest	3826	-47.32	-13	-34.32	-65.91	-54	1.71	8.39	H
	5737	-53.86	-13	-40.86	-77.05	-60.89	2.76	9.79	H
	7655	-49.13	-13	-36.13	-76.54	-58.64	2.38	11.89	H
									H
									H
									H
	3826	-44.80	-13	-31.80	-62.49	-51.48	1.71	8.39	V
	5737	-55.07	-13	-42.07	-77.37	-62.1	2.76	9.79	V
	7655	-48.57	-13	-35.57	-75.52	-58.08	2.38	11.89	V
									V
									V
									V

LTE Band 25 / 3MHz / QPSK / RB Size 1 Offset 0									
Channel	Frequency (MHz)	EIRP (dBm)	Limit (dBm)	Over Limit (dB)	SPA Reading (dBm)	S.G. Power (dBm)	TX Cable loss (dB)	TX Antenna Gain (dBi)	Polarization (H/V)
Highest	3826	-50.91	-13	-37.91	-69.5	-57.59	1.71	8.39	H
	5737	-53.97	-13	-40.97	-77.16	-61	2.76	9.79	H
	7655	-49.18	-13	-36.18	-76.59	-58.69	2.38	11.89	H
									H
									H
									H
	3826	-48.01	-13	-35.01	-65.7	-54.69	1.71	8.39	V
	5737	-55.00	-13	-42.00	-77.31	-62.03	2.76	9.79	V
	7655	-49.50	-13	-36.50	-76.44	-59.01	2.38	11.89	V
									V
									V
									V

Remark: Spurious emissions within 30-1000MHz were found more than 20dB below limit line.

LTE Band 25 / 5MHz / QPSK / RB Size 1 Offset 0									
Channel	Frequency (MHz)	EIRP (dBm)	Limit (dBm)	Over Limit (dB)	SPA Reading (dBm)	S.G. Power (dBm)	TX Cable loss (dB)	TX Antenna Gain (dBi)	Polarization (H/V)
Highest	3819	-50.25	-13	-37.25	-68.84	-56.93	1.70	8.38	H
	5730	-53.75	-13	-40.75	-76.87	-60.78	2.76	9.79	H
	7641	-48.77	-13	-35.77	-76.18	-58.27	2.38	11.88	H
									H
									H
									H
	3819	-40.18	-13	-27.18	-57.87	-46.86	1.70	8.38	V
	5730	-54.18	-13	-41.18	-76.32	-61.21	2.76	9.79	V
	7641	-48.52	-13	-35.52	-75.46	-58.02	2.38	11.88	V
									V
									V
									V

LTE Band 25 / 10MHz / QPSK / RB Size 1 Offset 0									
Channel	Frequency (MHz)	EIRP (dBm)	Limit (dBm)	Over Limit (dB)	SPA Reading (dBm)	S.G. Power (dBm)	TX Cable loss (dB)	TX Antenna Gain (dBi)	Polarization (H/V)
Highest	3812	-48.86	-13	-35.86	-67.28	-55.53	1.70	8.37	H
	5716	-53.34	-13	-40.34	-76.39	-60.38	2.75	9.79	H
	7627	-48.56	-13	-35.56	-75.97	-58.05	2.39	11.88	H
									H
									H
									H
	3812	-43.02	-13	-30.02	-60.57	-49.69	1.70	8.37	V
	5716	-54.92	-13	-41.92	-76.9	-61.96	2.75	9.79	V
	7627	-49.48	-13	-36.48	-76.43	-58.97	2.39	11.88	V
									V
									V
									V

Remark: Spurious emissions within 30-1000MHz were found more than 20dB below limit line.

LTE Band 25 / 15MHz / QPSK / RB Size 1 Offset 0									
Channel	Frequency (MHz)	EIRP (dBm)	Limit (dBm)	Over Limit (dB)	SPA Reading (dBm)	S.G. Power (dBm)	TX Cable loss (dB)	TX Antenna Gain (dBi)	Polarization (H/V)
Highest	3805	-47.98	-13	-34.98	-66.4	-54.65	1.70	8.37	H
	5709	-53.91	-13	-40.91	-76.96	-60.95	2.75	9.78	H
	7613	-49.20	-13	-36.20	-76.6	-58.67	2.39	11.87	H
									H
									H
									H
	3805	-44.46	-13	-31.46	-63.01	-51.13	1.70	8.37	V
	5709	-54.73	-13	-41.73	-76.71	-61.77	2.75	9.78	V
	7613	-49.77	-13	-36.77	-76.73	-59.24	2.39	11.87	V
									V
									V
									V

LTE Band 25 / 20MHz / QPSK / RB Size 1 Offset 0									
Channel	Frequency (MHz)	EIRP (dBm)	Limit (dBm)	Over Limit (dB)	SPA Reading (dBm)	S.G. Power (dBm)	TX Cable loss (dB)	TX Antenna Gain (dBi)	Polarization (H/V)
Highest	3791	-51.36	-13	-38.36	-69.65	-58.01	1.70	8.35	H
	5688	-54.06	-13	-41.06	-77.04	-61.1	2.73	9.78	H
	7585	-49.02	-13	-36.02	-76.47	-58.47	2.40	11.85	H
									H
									H
									H
	3791	-43.88	-13	-30.88	-61.45	-50.53	1.70	8.35	V
	5688	-55.01	-13	-42.01	-76.83	-62.05	2.73	9.78	V
	7585	-49.30	-13	-36.30	-76.34	-58.75	2.40	11.85	V
									V
									V
									V

Remark: Spurious emissions within 30-1000MHz were found more than 20dB below limit line.

LTE Band 4 / 1.4MHz / QPSK / RB Size 1 Offset 0									
Channel	Frequency (MHz)	EIRP (dBm)	Limit (dBm)	Over Limit (dB)	SPA Reading (dBm)	S.G. Power (dBm)	TX Cable loss (dB)	TX Antenna Gain (dBi)	Polarization (H/V)
Lowest	3420	-51.94	-13	-38.94	-68.5	-58.01	1.58	7.65	H
	5128	-53.37	-13	-40.37	-76.02	-60.66	2.41	9.70	H
	11976	-40.79	-13	-27.79	-75.46	-50.41	2.68	12.30	H
									H
									H
									H
	3420	-49.49	-13	-36.49	-65.62	-55.56	1.58	7.65	V
	5128	-51.81	-13	-38.81	-73.73	-59.1	2.41	9.70	V
	11976	-40.43	-13	-27.43	-74.14	-50.05	2.68	12.30	V
									V
									V
									V
Middle	3462	-52.64	-13	-39.64	-69.64	-58.88	1.59	7.83	H
	5198	-49.41	-13	-36.41	-72.08	-56.66	2.45	9.70	H
	12128	-40.07	-13	-27.07	-75.04	-49.69	2.71	12.33	H
									H
									H
									H
	3462	-51.78	-13	-38.78	-68.66	-58.02	1.59	7.83	V
	5198	-46.75	-13	-33.75	-68.93	-54	2.45	9.70	V
	12128	-39.59	-13	-26.59	-73.71	-49.21	2.71	12.33	V
									V
									V
									V
Highest	3511	-55.61	-13	-42.61	-72.92	-62.02	1.61	8.01	H
	5261	-53.58	-13	-40.58	-76.33	-60.79	2.49	9.70	H
	12280	-40.25	-13	-27.25	-75.68	-49.86	2.75	12.36	H
									H
									H
									H
	3511	-52.45	-13	-39.45	-69.87	-58.86	1.61	8.01	V
	5261	-50.70	-13	-37.70	-73.55	-57.91	2.49	9.70	V
	12280	-40.28	-13	-27.28	-74.96	-49.89	2.75	12.36	V
									V
									V
									V

Remark: Spurious emissions within 30-1000MHz were found more than 20dB below limit line.

LTE Band 4 / 3MHz / QPSK / RB Size 1 Offset 0									
Channel	Frequency (MHz)	EIRP (dBm)	Limit (dBm)	Over Limit (dB)	SPA Reading (dBm)	S.G. Power (dBm)	TX Cable loss (dB)	TX Antenna Gain (dBi)	Polarization (H/V)
Lowest	3420	-51.29	-13	-38.29	-67.86	-57.36	1.58	7.65	H
	5128	-52.81	-13	-39.81	-75.58	-60.1	2.41	9.70	H
	11968	-41.12	-13	-28.12	-75.58	-50.74	2.68	12.30	H
									H
									H
									H
	3420	-48.02	-13	-35.02	-64.14	-54.09	1.58	7.65	V
	5128	-51.01	-13	-38.01	-73.03	-58.3	2.41	9.70	V
	11976	-40.39	-13	-27.39	-74.11	-50.01	2.68	12.30	V
									V
									V
									V
Middle	3462	-50.97	-13	-37.97	-67.93	-57.21	1.59	7.83	H
	5191	-47.03	-13	-34.03	-69.76	-54.28	2.45	9.70	H
	12120	-40.27	-13	-27.27	-75.2	-49.89	2.71	12.32	H
									H
									H
									H
	3462	-51.12	-13	-38.12	-68.06	-57.36	1.59	7.83	V
	5191	-45.00	-13	-32.00	-67.26	-52.25	2.45	9.70	V
	12120	-39.27	-13	-26.27	-73.24	-48.89	2.71	12.32	V
									V
									V
									V
Highest	3504	-54.02	-13	-41.02	-71.29	-60.42	1.61	8.00	H
	5254	-53.56	-13	-40.56	-76.13	-60.78	2.48	9.70	H
	12264	-39.21	-13	-26.21	-74.61	-48.82	2.74	12.35	H
									H
									H
									H
	3504	-52.94	-13	-39.94	-70.37	-59.34	1.61	8.00	V
	5254	-51.53	-13	-38.53	-74.41	-58.75	2.48	9.70	V
	12264	-39.64	-13	-26.64	-74.22	-49.25	2.74	12.35	V
									V
									V
									V

Remark: Spurious emissions within 30-1000MHz were found more than 20dB below limit line.

LTE Band 4 / 5MHz / QPSK / RB Size 1 Offset 0									
Channel	Frequency (MHz)	EIRP (dBm)	Limit (dBm)	Over Limit (dB)	SPA Reading (dBm)	S.G. Power (dBm)	TX Cable loss (dB)	TX Antenna Gain (dBi)	Polarization (H/V)
Lowest	3420	-51.28	-13	-38.28	-67.81	-57.35	1.58	7.65	H
	5128	-53.45	-13	-40.45	-76.28	-60.74	2.41	9.70	H
	6843	-49.42	-13	-36.42	-76.29	-57.39	2.64	10.61	H
									H
									H
									H
	3420	-50.22	-13	-37.22	-66.41	-56.29	1.58	7.65	V
	5135	-53.53	-13	-40.53	-75.47	-60.82	2.41	9.70	V
	6843	-50.40	-13	-37.40	-76.89	-58.37	2.64	10.61	V
									V
									V
									V
Middle	3462	-52.44	-13	-39.44	-69.41	-58.68	1.59	7.83	H
	5191	-48.32	-13	-35.32	-71.06	-55.57	2.45	9.70	H
	6927	-49.63	-13	-36.63	-76.89	-57.73	2.61	10.71	H
									H
									H
									H
	3462	-53.57	-13	-40.57	-70.44	-59.81	1.59	7.83	V
	5191	-46.18	-13	-33.18	-68.41	-53.43	2.45	9.70	V
	6927	-49.71	-13	-36.71	-76.76	-57.81	2.61	10.71	V
									V
									V
									V
Highest	3504	-53.71	-13	-40.71	-71.03	-60.11	1.61	8.00	H
	5254	-54.26	-13	-41.26	-76.9	-61.48	2.48	9.70	H
	7011	-48.94	-13	-35.94	-76.49	-57.18	2.59	10.82	H
									H
									H
									H
	3504	-52.35	-13	-39.35	-69.76	-58.75	1.61	8.00	V
	5254	-53.72	-13	-40.72	-75.52	-60.94	2.48	9.70	V
	7011	-49.11	-13	-36.11	-76.7	-57.35	2.59	10.82	V
									V
									V
									V

Remark: Spurious emissions within 30-1000MHz were found more than 20dB below limit line.

LTE Band 4 / 10MHz / QPSK / RB Size 1 Offset 0									
Channel	Frequency (MHz)	EIRP (dBm)	Limit (dBm)	Over Limit (dB)	SPA Reading (dBm)	S.G. Power (dBm)	TX Cable loss (dB)	TX Antenna Gain (dBi)	Polarization (H/V)
Lowest	3420	-53.05	-13	-40.05	-69.64	-59.12	1.58	7.65	H
	5128	-53.12	-13	-40.12	-76.87	-60.41	2.41	9.70	H
	6843	-50.04	-13	-37.04	-76.99	-58.01	2.64	10.61	H
									H
									H
									H
	3420	-50.17	-13	-37.17	-66.28	-56.24	1.58	7.65	V
	5128	-54.95	-13	-41.95	-76.89	-62.24	2.41	9.70	V
	6843	-50.24	-13	-37.24	-76.78	-58.21	2.64	10.61	V
									V
									V
									V
Middle	3455	-51.31	-13	-38.31	-68.22	-57.52	1.59	7.80	H
	5184	-47.76	-13	-34.76	-70.43	-55.02	2.44	9.70	H
	6913	-49.73	-13	-36.73	-76.93	-57.81	2.62	10.70	H
									H
									H
									H
	3455	-53.10	-13	-40.10	-69.75	-59.31	1.59	7.80	V
	5184	-46.55	-13	-33.55	-68.67	-53.81	2.44	9.70	V
	6913	-49.90	-13	-36.90	-76.9	-57.98	2.62	10.70	V
									V
									V
									V
Highest	3490	-51.68	-13	-38.68	-68.79	-58.03	1.60	7.96	H
	5233	-54.58	-13	-41.58	-77.25	-61.81	2.47	9.70	H
	6983	-49.35	-13	-36.35	-76.82	-57.53	2.60	10.78	H
									H
									H
									H
	3490	-51.06	-13	-38.06	-68.23	-57.41	1.60	7.96	V
	5233	-54.38	-13	-41.38	-77.04	-61.61	2.47	9.70	V
	6983	-49.63	-13	-36.63	-76.98	-57.81	2.60	10.78	V
									V
									V
									V

Remark: Spurious emissions within 30-1000MHz were found more than 20dB below limit line.

LTE Band 4 / 15MHz / QPSK / RB Size 1 Offset 0									
Channel	Frequency (MHz)	EIRP (dBm)	Limit (dBm)	Over Limit (dB)	SPA Reading (dBm)	S.G. Power (dBm)	TX Cable loss (dB)	TX Antenna Gain (dBi)	Polarization (H/V)
Lowest	3420	-60.05	-13	-47.05	-76.58	-66.12	1.58	7.65	H
	5128	-54.82	-13	-41.82	-77.69	-62.11	2.41	9.70	H
	6843	-49.82	-13	-36.82	-77.65	-57.79	2.64	10.61	H
									H
									H
									H
	3420	-50.91	-13	-37.91	-66.08	-56.98	1.58	7.65	V
	5128	-54.92	-13	-41.92	-76.85	-62.21	2.41	9.70	V
	6843	-50.19	-13	-37.19	-76.68	-58.16	2.64	10.61	V
									V
									V
									V
Middle	3455	-52.18	-13	-39.18	-69.03	-58.39	1.59	7.80	H
	5177	-47.45	-13	-34.45	-70.17	-54.71	2.44	9.70	H
	6913	-46.31	-13	-33.31	-76.58	-54.39	2.62	10.70	H
									H
									H
									H
	3455	-52.61	-13	-39.61	-69.25	-58.82	1.59	7.80	V
	5177	-46.65	-13	-33.65	-68.8	-53.91	2.44	9.70	V
	6913	-49.71	-13	-36.71	-76.66	-57.79	2.62	10.70	V
									V
									V
									V
Highest	3483	-51.92	-13	-38.92	-69.1	-58.25	1.60	7.93	H
	5226	-51.15	-13	-38.15	-73.81	-58.38	2.47	9.70	H
	6969	-49.36	-13	-36.36	-76.73	-57.52	2.60	10.76	H
									H
									H
									H
	3483	-52.18	-13	-39.18	-69.31	-58.51	1.60	7.93	V
	5226	-50.39	-13	-37.39	-72.99	-57.62	2.47	9.70	V
	6969	-49.19	-13	-36.19	-76.36	-57.35	2.60	10.76	V
									V
									V
									V

Remark: Spurious emissions within 30-1000MHz were found more than 20dB below limit line.

LTE Band 4 / 20MHz / QPSK / RB Size 1 Offset 0									
Channel	Frequency (MHz)	EIRP (dBm)	Limit (dBm)	Over Limit (dB)	SPA Reading (dBm)	S.G. Power (dBm)	TX Cable loss (dB)	TX Antenna Gain (dBi)	Polarization (H/V)
Lowest	3420	-53.64	-13	-40.64	-70.21	-59.71	1.58	7.65	H
	5128	-53.93	-13	-40.93	-76.74	-61.22	2.41	9.70	H
	6843	-49.81	-13	-36.81	-76.72	-57.78	2.64	10.61	H
									H
									H
									H
	3420	-51.85	-13	-38.85	-67.01	-57.92	1.58	7.65	V
	5128	-53.22	-13	-40.22	-74.18	-60.51	2.41	9.70	V
	6843	-50.08	-13	-37.08	-76.59	-58.05	2.64	10.61	V
									V
									V
									V
Middle	3448	-52.36	-13	-39.36	-69.21	-58.54	1.59	7.77	H
	5170	-47.15	-13	-34.15	-69.92	-54.42	2.43	9.70	H
	6899	-49.21	-13	-36.21	-77.05	-57.27	2.62	10.68	H
									H
									H
									H
	3448	-52.24	-13	-39.24	-68.91	-58.42	1.59	7.77	V
	5170	-45.54	-13	-32.54	-67.61	-52.81	2.43	9.70	V
	6899	-50.45	-13	-37.45	-77.31	-58.51	2.62	10.68	V
									V
									V
									V
Highest	3476	-51.98	-13	-38.98	-69.14	-58.28	1.60	7.89	H
	5212	-49.18	-13	-36.18	-71.89	-56.42	2.46	9.70	H
	6955	-49.15	-13	-36.15	-76.48	-57.29	2.61	10.75	H
									H
									H
									H
	3476	-53.21	-13	-40.21	-70.4	-59.51	1.60	7.89	V
	5212	-47.07	-13	-34.07	-69.54	-54.31	2.46	9.70	V
	6955	-49.59	-13	-36.59	-76.73	-57.73	2.61	10.75	V
									V
									V
									V

Remark: Spurious emissions within 30-1000MHz were found more than 20dB below limit line.

LTE Band 12 / 1.4MHz / QPSK / RB Size 1 Offset 0									
Channel	Frequency (MHz)	ERP (dBm)	Limit (dBm)	Over Limit (dB)	SPA Reading (dBm)	S.G. Power (dBm)	TX Cable loss (dB)	TX Antenna Gain (dBi)	Polarization (H/V)
Lowest	1400	-45.21	-13.00	-32.21	-54.54	-46.87	0.87	4.68	H
	2096	-62.36	-13.00	-49.36	-74.08	-63.23	1.16	4.19	H
	3496	-60.43	-13.00	-47.43	-74.77	-64.66	1.60	7.98	H
									H
									H
									H
	1400	-48.11	-13.00	-35.11	-56.61	-49.77	0.87	4.68	V
	2096	-61.92	-13.00	-48.92	-74.32	-62.79	1.16	4.19	V
	3496	-59.79	-13.00	-46.79	-75.23	-64.02	1.60	7.98	V
									V
									V
									V
Middle	1416	-50.66	-13.00	-37.66	-59.99	-52.41	0.87	4.78	H
	2120	-61.21	-13.00	-48.21	-73.13	-62.15	1.17	4.26	H
	3532	-60.38	-13.00	-47.38	-74.97	-64.65	1.61	8.04	H
									H
									H
									H
	1416	-56.13	-13.00	-43.13	-63.63	-57.88	0.87	4.78	V
	2120	-60.98	-13.00	-47.98	-73.73	-61.92	1.17	4.26	V
	3532	-59.73	-13.00	-46.73	-75.05	-64.00	1.61	8.04	V
									V
									V
									V
Highest	1432	-53.62	-13.00	-40.62	-62.91	-55.47	0.88	4.88	H
	2152	-61.87	-13.00	-48.87	-74.21	-62.89	1.18	4.36	H
	2864	-60.47	-13.00	-47.47	-75.32	-62.61	1.40	5.69	H
									H
									H
									H
	1432	-57.52	-13.00	-44.52	-65.64	-59.37	0.88	4.88	V
	2152	-60.88	-13.00	-47.88	-74.31	-61.90	1.18	4.36	V
	2864	-60.01	-13.00	-47.01	-75.21	-62.15	1.40	5.69	V
									V
									V
									V

Remark: Spurious emissions within 30-1000MHz were found more than 20dB below limit line.

LTE Band 12 / 3MHz / QPSK / RB Size 1 Offset 0									
Channel	Frequency (MHz)	ERP (dBm)	Limit (dBm)	Over Limit (dB)	SPA Reading (dBm)	S.G. Power (dBm)	TX Cable loss (dB)	TX Antenna Gain (dBi)	Polarization (H/V)
Lowest	1400	-45.62	-13.00	-32.62	-54.95	-47.28	0.87	4.68	H
	2104	-62.39	-13.00	-49.39	-74.11	-63.29	1.17	4.21	H
	2800	-60.82	-13.00	-47.82	-75.16	-62.93	1.38	5.64	H
									H
									H
									H
	1400	-48.41	-13.00	-35.41	-56.91	-50.07	0.87	4.68	V
	2104	-61.96	-13.00	-48.96	-74.36	-62.86	1.17	4.21	V
	2800	-59.73	-13.00	-46.73	-75.17	-61.84	1.38	5.64	V
									V
									V
									V
Middle	1416	-51.52	-13.00	-38.52	-60.85	-53.27	0.87	4.78	H
	2120	-61.34	-13.00	-48.34	-73.26	-62.28	1.17	4.26	H
	2832	-60.67	-13.00	-47.67	-75.26	-62.79	1.39	5.67	H
									H
									H
									H
	1416	-56.44	-13.00	-43.44	-64.94	-58.19	0.87	4.78	V
	2120	-60.75	-13.00	-47.75	-73.50	-61.69	1.17	4.26	V
	2832	-59.83	-13.00	-46.83	-75.15	-61.95	1.39	5.67	V
									V
									V
									V
Highest	1424	-51.90	-13.00	-38.90	-61.19	-53.70	0.88	4.83	H
	2136	-62.16	-13.00	-49.16	-74.19	-63.14	1.18	4.31	H
	2848	-60.33	-13.00	-47.33	-75.05	-62.46	1.40	5.68	H
									H
									H
									H
	1424	-54.96	-13.00	-41.96	-63.08	-56.76	0.88	4.83	V
	2136	-61.40	-13.00	-48.40	-74.49	-62.38	1.18	4.31	V
	2848	-59.66	-13.00	-46.66	-74.92	-61.79	1.40	5.68	V
									V
									V
									V

Remark: Spurious emissions within 30-1000MHz were found more than 20dB below limit line.

LTE Band 12 / 5MHz / QPSK / RB Size 1 Offset 0									
Channel	Frequency (MHz)	ERP (dBm)	Limit (dBm)	Over Limit (dB)	SPA Reading (dBm)	S.G. Power (dBm)	TX Cable loss (dB)	TX Antenna Gain (dBi)	Polarization (H/V)
Lowest	1400	-44.03	-13.00	-31.03	-53.36	-45.69	0.87	4.68	H
	2100	-62.55	-13.00	-49.55	-74.27	-63.43	1.17	4.20	H
	2800	-60.17	-13.00	-47.17	-74.51	-62.28	1.38	5.64	H
									H
									H
									H
	1400	-47.86	-13.00	-34.86	-56.36	-49.52	0.87	4.68	V
	2100	-61.73	-13.00	-48.73	-74.13	-62.61	1.17	4.20	V
	2800	-59.58	-13.00	-46.58	-75.02	-61.69	1.38	5.64	V
									V
									V
									V
Middle	1408	-51.74	-13.00	-38.74	-61.07	-53.45	0.87	4.73	H
	2112	-62.27	-13.00	-49.27	-73.99	-63.19	1.17	4.24	H
	2816	-60.69	-13.00	-47.69	-75.16	-62.80	1.39	5.65	H
									H
									H
									H
	1408	-54.17	-13.00	-41.17	-62.67	-55.88	0.87	4.73	V
	2112	-61.24	-13.00	-48.24	-73.64	-62.16	1.17	4.24	V
	2816	-59.74	-13.00	-46.74	-75.12	-61.85	1.39	5.65	V
									V
									V
									V
Highest	1424	-49.44	-13.00	-36.44	-58.73	-51.24	0.88	4.83	H
	2136	-61.77	-13.00	-48.77	-73.90	-62.75	1.18	4.31	H
	2848	-60.25	-13.00	-47.25	-74.97	-62.38	1.40	5.68	H
									H
									H
									H
	1424	-52.18	-13.00	-39.18	-60.30	-53.98	0.88	4.83	V
	2136	-60.33	-13.00	-47.33	-73.42	-61.31	1.18	4.31	V
	2848	-59.67	-13.00	-46.67	-74.93	-61.80	1.40	5.68	V
									V
									V
									V

Remark: Spurious emissions within 30-1000MHz were found more than 20dB below limit line.

LTE Band 12 / 10MHz / QPSK / RB Size 1 Offset 0									
Channel	Frequency (MHz)	ERP (dBm)	Limit (dBm)	Over Limit (dB)	SPA Reading (dBm)	S.G. Power (dBm)	TX Cable loss (dB)	TX Antenna Gain (dBi)	Polarization (H/V)
Lowest	1400	-47.14	-13.00	-34.14	-56.47	-48.80	0.87	4.68	H
	2096	-62.48	-13.00	-49.48	-74.20	-63.35	1.16	4.19	H
	2800	-60.85	-13.00	-47.85	-75.19	-62.96	1.38	5.64	H
									H
									H
									H
	1400	-50.01	-13.00	-37.01	-58.51	-51.67	0.87	4.68	V
	2096	-61.96	-13.00	-48.96	-74.36	-62.83	1.16	4.19	V
	2800	-59.91	-13.00	-46.91	-75.35	-62.02	1.38	5.64	V
									V
									V
									V
Middle	1408	-47.31	-13.00	-34.31	-56.64	-49.02	0.87	4.73	H
	2112	-61.83	-13.00	-48.83	-73.55	-62.75	1.17	4.24	H
	2816	-60.70	-13.00	-47.70	-75.17	-62.81	1.39	5.65	H
									H
									H
									H
	1408	-48.38	-13.00	-35.38	-56.88	-50.09	0.87	4.73	V
	2112	-60.06	-13.00	-47.06	-72.46	-60.98	1.17	4.24	V
	2816	-59.82	-13.00	-46.82	-75.20	-61.93	1.39	5.65	V
									V
									V
									V
Highest	1416	-52.68	-13.00	-39.68	-62.00	-54.43	0.87	4.78	H
	2120	-61.35	-13.00	-48.35	-73.27	-62.29	1.17	4.26	H
	3532	-60.34	-13.00	-47.34	-74.93	-64.61	1.61	8.04	H
									H
									H
									H
	1416	-49.59	-13.00	-36.59	-58.09	-51.34	0.87	4.78	V
	2120	-59.89	-13.00	-46.89	-72.64	-60.83	1.17	4.26	V
	3532	-59.77	-13.00	-46.77	-75.09	-64.04	1.61	8.04	V
									V
									V
									V

Remark: Spurious emissions within 30-1000MHz were found more than 20dB below limit line.

LTE Band 17 / 5MHz / QPSK / RB Size 1 Offset 0									
Channel	Frequency (MHz)	ERP (dBm)	Limit (dBm)	Over Limit (dB)	SPA Reading (dBm)	S.G. Power (dBm)	TX Cable loss (dB)	TX Antenna Gain (dBi)	Polarization (H/V)
Lowest	1408	-49.10	-13	-36.10	-58.43	-50.81	0.87	4.73	H
	2112	-61.17	-13	-48.17	-72.89	-62.09	1.17	4.24	H
	2816	-60.67	-13	-47.67	-75.14	-62.78	1.39	5.65	H
									H
									H
									H
	1408	-48.68	-13	-35.68	-57.18	-50.39	0.87	4.73	V
	2112	-59.32	-13	-46.32	-71.72	-60.24	1.17	4.24	V
	2816	-59.64	-13	-46.64	-75.02	-61.75	1.39	5.65	V
									V
									V
									V
Middle	1416	-52.79	-13	-39.79	-62.12	-54.54	0.87	4.78	H
	2120	-62.22	-13	-49.22	-74.14	-63.16	1.17	4.26	H
	3532	-60.51	-13	-47.51	-75.10	-64.78	1.61	8.04	H
									H
									H
									H
	1416	-51.09	-13	-38.09	-59.59	-52.84	0.87	4.78	V
	2120	-60.45	-13	-47.45	-73.20	-61.39	1.17	4.26	V
	3532	-59.86	-13	-46.86	-75.18	-64.13	1.61	8.04	V
									V
									V
									V
Highest	1424	-52.39	-13	-39.39	-61.68	-54.19	0.88	4.83	H
	2136	-61.78	-13	-48.78	-73.91	-62.76	1.18	4.31	H
	2848	-60.44	-13	-47.44	-75.16	-62.57	1.40	5.68	H
									H
									H
									H
	1424	-53.64	-13	-40.64	-61.76	-55.44	0.88	4.83	V
	2136	-60.09	-13	-47.09	-73.18	-61.07	1.18	4.31	V
	2848	-59.76	-13	-46.76	-75.02	-61.89	1.40	5.68	V
									V
									V
									V

Remark: Spurious emissions within 30-1000MHz were found more than 20dB below limit line.

LTE Band 17 / 10MHz / QPSK / RB Size 1 Offset 0									
Channel	Frequency (MHz)	ERP (dBm)	Limit (dBm)	Over Limit (dB)	SPA Reading (dBm)	S.G. Power (dBm)	TX Cable loss (dB)	TX Antenna Gain (dBi)	Polarization (H/V)
Lowest	1408	-49.56	-13	-36.56	-58.89	-51.27	0.87	4.73	H
	2112	-61.84	-13	-48.84	-73.56	-62.76	1.17	4.24	H
	2816	-60.52	-13	-47.52	-74.99	-62.63	1.39	5.65	H
									H
									H
									H
	1408	-49.03	-13	-36.03	-57.53	-50.74	0.87	4.73	V
	2112	-59.92	-13	-46.92	-72.32	-60.84	1.17	4.24	V
	2816	-59.86	-13	-46.86	-75.24	-61.97	1.39	5.65	V
									V
									V
									V
Middle	1408	-51.23	-13	-38.23	-60.56	-52.94	0.87	4.73	H
	2112	-62.53	-13	-49.53	-74.25	-63.45	1.17	4.24	H
	2816	-60.83	-13	-47.83	-75.30	-62.94	1.39	5.65	H
									H
									H
									H
	1408	-49.64	-13	-36.64	-58.14	-51.35	0.87	4.73	V
	2112	-61.63	-13	-48.63	-74.03	-62.55	1.17	4.24	V
	2816	-59.86	-13	-46.86	-75.24	-61.97	1.39	5.65	V
									V
									V
									V
Highest	1416	-52.65	-13	-39.65	-61.98	-54.40	0.87	4.78	H
	2120	-61.65	-13	-48.65	-73.57	-62.59	1.17	4.26	H
	2832	-60.57	-13	-47.57	-75.16	-62.69	1.39	5.67	H
									H
									H
									H
	1416	-50.02	-13	-37.02	-58.52	-51.77	0.87	4.78	V
	2120	-60.03	-13	-47.03	-72.78	-60.97	1.17	4.26	V
	2832	-59.90	-13	-46.90	-75.22	-62.02	1.39	5.67	V
									V
									V
									V

Remark: Spurious emissions within 30-1000MHz were found more than 20dB below limit line.