4. Maximum Peak Conducted Output Power

4.1. Test Setup

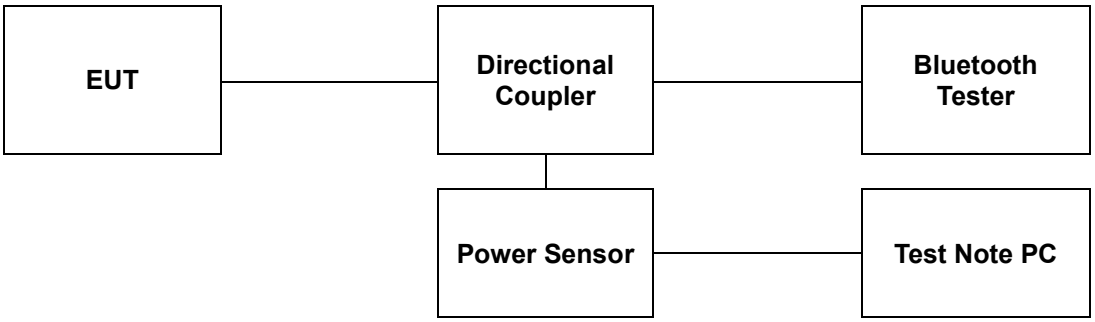

4.2. Limit

4.2.1. FCC

1. §15.247(a)(1), Frequency hopping systems shall have hopping channel carrier frequencies separated by a minimum of 25 ㎑ or the 20 ㏈ bandwidth of the hopping channel, whichever is greater. Alternatively, frequency hopping systems operating in the 2 400-2 483.5 ㎒ band may have hopping channel carrier frequencies that are separated by 25 ㎑ or two-thirds of the 20 ㏈ bandwidth of the hopping channel, whichever is greater, provided the systems operate with an output power no greater than 125 ㎽.
2. §15.247(b)(1), For frequency hopping systems operating in the 2 400-2 483.5 ㎒ band employing at least 75 non-overlapping hopping channels, and all frequency hopping systems in the 5 725-5 850 ㎒ band: 1 watt. For all other frequency hopping systems in the 2 400-2 483.5 ㎒ band: 0.125 watts.

4.2.2. IC

1. According to RSS-247 Issue 2, 5.1(b), FHSs shall have hopping channel carrier frequencies separated by a minimum of 25 ㎑ or the 20 ㏈ bandwidth of the hopping channel, whichever is greater. Alternatively, FHSs operating in the band 2 400-2 483.5 ㎒ may have hopping channel carrier frequencies that are separated by 25 ㎑ or two thirds of the 20 ㏈ bandwidth of the hopping channel, whichever is greater, provided that the systems operate with an output power no greater than 0.125 W.
2. According to RSS-247 Issue 2, 5.4(b), for FHSs operating in the band 2 400-2 483.5 ㎒, the maximum peak conducted output power shall not exceed 1.0 W if the hopset uses 75 or more hopping channels; the maximum peak conducted output power shall not exceed 0.125 W if the hopset uses less than 75 hopping channels. The e.i.r.p. shall not exceed 4 W, except as provided in section 5.4(e).

4.3. Test Procedure

The test follows ANSI C63.10-2013. Using the power sensor instead of a spectrum analyzer.

1. Place the EUT on the table and set it in the transmitting mode.
2. Remove the antenna from the EUT and then connect a low loss RF cable from the antenna port to the Power sensor.
3. Test program: (S/W name: R&S Power Viewer, Version: 3.2.0)
4. Measure each channel.

4.4. Test Results

Ambient temperature : (23 ± 1) ℃
Relative humidity : 47 % R.H.

Operation Mode	Data Rate (Mbps)	Channel	Frequency (㎒)	Average Power Result (㏈ m)	Peak Power Result (㏈ m)	Limit (㏈ m)
GFSK	1	Low	2 402	**3.71**	**4.08**	30
		Middle	2 441	3.05	3.43	
		High	2 480	3.40	3.81	
π/4DQPSK	2	Low	2 402	**3.09**	5.75	20.97
		Middle	2 441	2.70	5.56	
		High	2 480	3.03	**6.03**	
8DPSK	3	Low	2 402	3.12	6.22	
		Middle	2 441	2.62	5.89	
		High	2 480	**3.17**	**6.53**	

Remark;

In the case of AFH, the limit for peak power is 0.125 W.

5. Carrier Frequency Separation

5.1. Test Setup

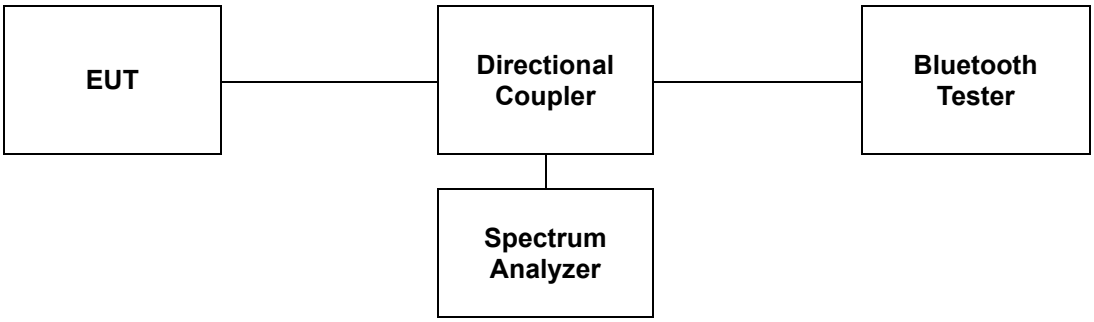

5.2. Limit

5.2.1. FCC

§15.247(a)(1), Frequency hopping systems shall have hopping channel carrier frequencies separated by a minimum of 25 ㎑ or the 20 ㏈ bandwidth of the hopping channel, whichever is greater. Alternatively, frequency hopping systems operating in the 2 400-2 483.5 ㎒ band may have hopping channel carrier frequencies that are separated by 25 ㎑ or two-thirds of the 20 ㏈ bandwidth of the hopping channel, whichever is greater, provided the systems operate with an output power no greater than 125 ㎽.

5.2.2. IC

According to RSS-247 Issue 2, 5.1(b), FHSs shall have hopping channel carrier frequencies separated by a minimum of 25 ㎑ or the 20 ㏈ bandwidth of the hopping channel, whichever is greater. Alternatively, FHSs operating in the band 2 400-2 483.5 ㎒ may have hopping channel carrier frequencies that are separated by 25 ㎑ or two thirds of the 20 ㏈ bandwidth of the hopping channel, whichever is greater, provided that the systems operate with an output power no greater than 0.125 W.

5.3. Test Procedure

The test follows ANSI C63.10-2013.

The device is operating in hopping mode between 79 channels and also supporting Adaptive Frequency Hopping with hopping between 20 channels. As compared with each operating mode, 79 channels are chosen as a representative for test.

Use the following spectrum analyzer settings:

1. Span: Wide enough to capture the peaks of two adjacent channels
2. RBW: Start with the RBW set to approximately 30 % of the channel spacing; adjust as necessary to best identify the center of each individual channel.
3. VBW ≥ RBW
4. Sweep: Auto
5. Detector: Peak
6. Trace: Max hold
7. Allow the trace to stabilize.

Use the marker-delta function to determine the between the peaks of the adjacent channels.

5.4. Test Results

Ambient temperature : (23 ± 1) ℃
Relative humidity : 47 % R.H.

Operation Mode	Frequency (㎒)	Adjacent Hopping Channel Separation (㎑)	20 ㏈ Bandwidth (㎑)
GFSK	2 441	1 000	977

Operation Mode	Frequency (㎒)	Adjacent Hopping Channel Separation (㎑)	Two-third of 20 ㏈ Bandwidth (㎑)
8DPSK	2 441	1 000	891

Remark;

Measurement is made with EUT operating in hopping mode between 79 channels providing a worst case scenario as compared to AFH mode hopping between 20 channels.

- Test plots

Operation Mode: GFSK

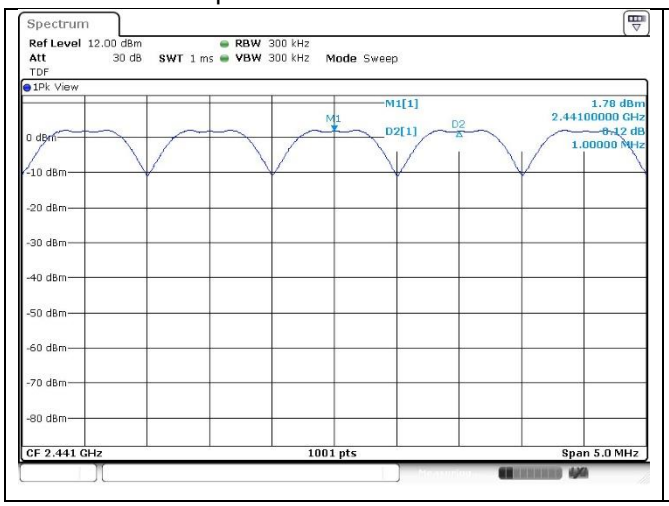

Operation Mode: 8DPSK

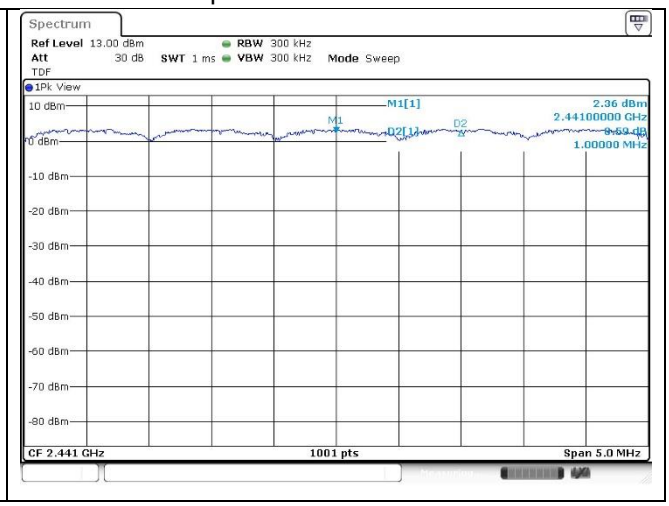

6. Number of Hopping Frequencies

6.1. Test Setup

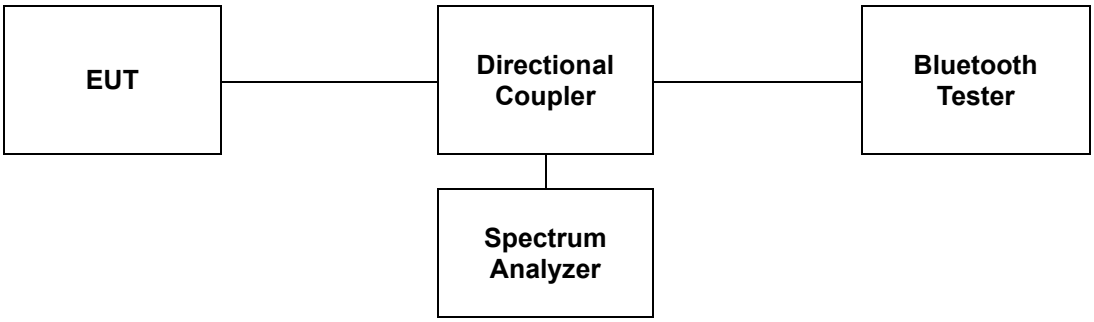

6.2. Limit

6.2.1. FCC

§15.247(a)(1)(iii), Frequency hopping systems in the 2 400-2 483.5 ㎒ band shall use at least 15 channels. The average time of occupancy on any channel shall not be greater than 0.4 seconds within a period of 0.4 seconds multiplied by the number of hopping channels employed. Frequency hopping systems may avoid or suppress transmissions on a particular hopping frequency provided that a minimum of 15 channels are used.

6.2.2. IC

According to RSS-247 Issue 2, 5.1(d), FHSs operating in the band 2 400-2 483.5 ㎒ shall use at least 15 hopping channels. The average time of occupancy on any channel shall not be greater than 0.4 seconds within a period of 0.4 seconds, multiplied by the number of hopping channels employed. Transmissions on particular hopping frequencies may be avoided or suppressed provided that at least 15 hopping channels are used.

6.3. Test Procedure

The test follows ANSI C63.10-2013.

The device supports Adaptive Frequency Hopping and will use a minimum of 20 channels of the 79 available channels.

The EUT shall have its hopping function enabled. Use the following spectrum analyzer settings:

1. Span: The frequency band of operation. Depending on the number of channels the device supports, it may be necessary to divide the frequency range of operation across multiple spans, to allow the individual channels to be clearly seen.
2. RBW: To identify clearly the individual channels, set the RBW to less than 30 % of the channel spacing or the 20 ㏈ bandwidth, whichever is smaller.
3. VBW ≥ RBW
4. Sweep: Auto
5. Detector function: Peak
6. Trace: Max hold
7. Allow the trace to stabilize.

6.4. Test Results

Ambient temperature : (23 ± 1) ℃
Relative humidity : 47 % R.H.

Operation Mode	Number of Hopping Frequency	Limit
GFSK	79	≥ 15
8DPSK	79	≥ 15

Remark;

Measurement is made with EUT operating in hopping mode between 79 channels providing a worst case scenario as compared to AFH mode hopping between 20 channels.

- Test plots

Operation Mode: GFSK

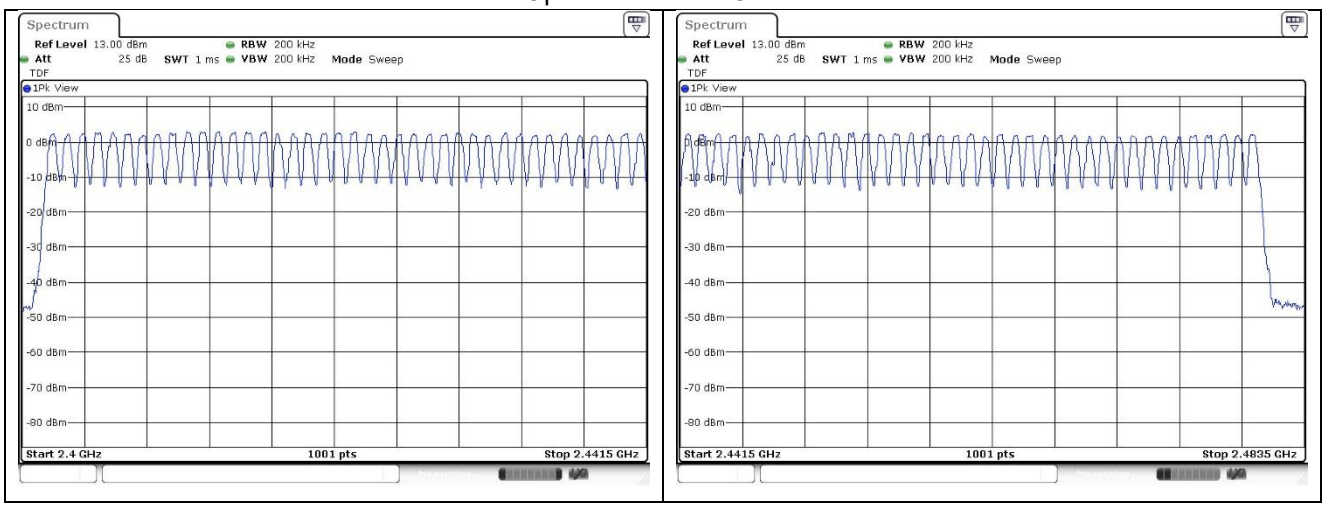

Operation Mode: 8DPSK

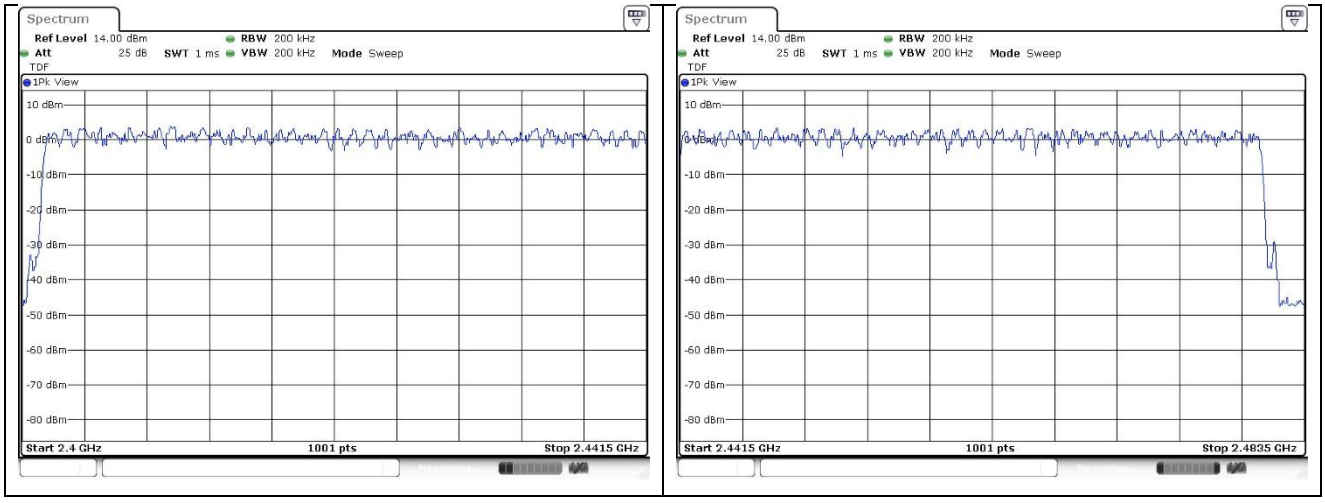

7. Time of Occupancy (Dwell Time)

7.1. Test Set up

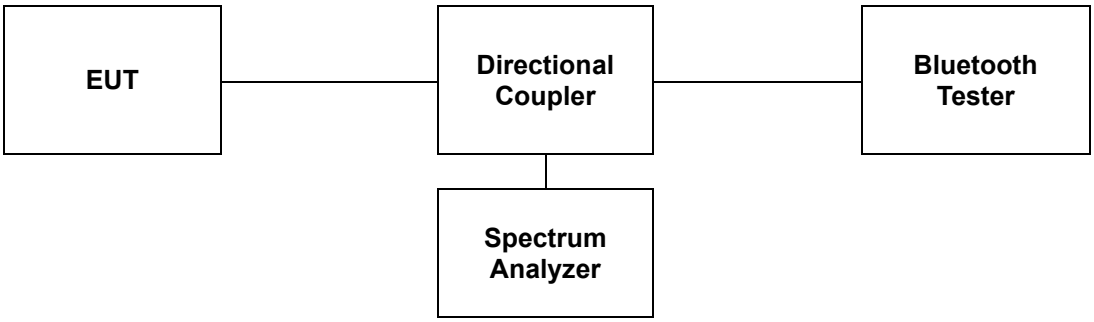

7.2. Limit

7.2.1. FCC

§15.247(a)(1)(iii), Frequency hopping systems in the 2 400-2 483.5 ㎒ band, the average time of occupancy on any frequency shall not be greater than 0.4 second within a 31.6 second period.

7.2.2. IC

According to RSS-247 Issue 2, 5.1(d), FHSs operating in the band 2 400-2 483.5 ㎒ shall use at least 15 hopping channels. The average time of occupancy on any channel shall not be greater than 0.4 seconds within a period of 0.4 seconds, multiplied by the number of hopping channels employed. Transmissions on particular hopping frequencies may be avoided or suppressed provided that at least 15 hopping channels are used.

A period time = 0.4 (s) * 79 = 31.6 (s)

***Adaptive Frequency Hopping**

A period time = 0.4 (s) * 20 = 8 (s)

7.3. Test Procedure

The test follows ANSI C63.10-2013.

1. Check the calibration of the measuring instrument using either an internal calibrator or a known signal from an external generator.
2. Position the EUT as shown in test setup without connection to measurement instrument. Turn on the EUT and connect its antenna terminal to measurement instrument via a low loss cable.
3. Measure the time duration of one transmission on the measured frequency. And then plot the result with time difference of this time duration.
4. The Bluetooth has 3 type of payload, DH1, DH3, DH5 and 3DH1, 3DH3, 3DH5.The hopping rate is insisted of 1 600 per second.

The EUT must have its hopping function enabled. Use the following spectrum analyzer setting:

1. Span = Zero span, centered on a hopping channel.
2. RBW = 1 ㎒.
3. VBW ≥ RBW.
4. Sweep = As necessary to capture the entire dwell time per hopping channel.
5. Detector = Peak.
6. Trace = Max hold.

Use the marker-delta function to determine the dwell time. If this value varies with different modes of operation, then repeat this test for each variation.

7.4. Test Results

Ambient temperature : (23 ± 1) ℃
Relative humidity : 47 % R.H.

7.4.1. Packet Type: DH1, 3DH1

Operation Mode	Frequency (㎒)	Dwell Time (㎳)	Time of occupancy on the Tx Channel in 31.6 sec (㎳)	Limit for time of occupancy on the Tx Channel in 31.6 sec (㎳)
GFSK	2 441	0.38	121.60	400
8DPSK	2 441	0.38	121.60	400

Remark;

Time of occupancy on the TX channel in 31.6 sec
In case of GFSK and 8DPSK: 0.38 × {(1 600 ÷ 2) / 79} × 31.6 = 121.60 ㎳

- Test plots

Operation Mode: GFSK

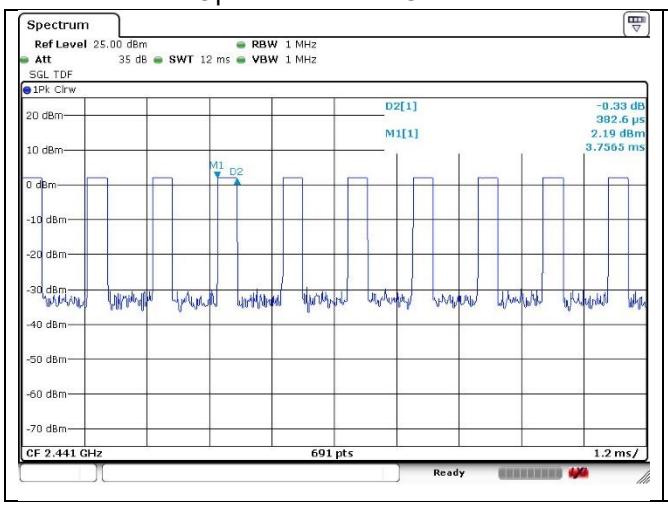

Operation Mode: 8DPSK

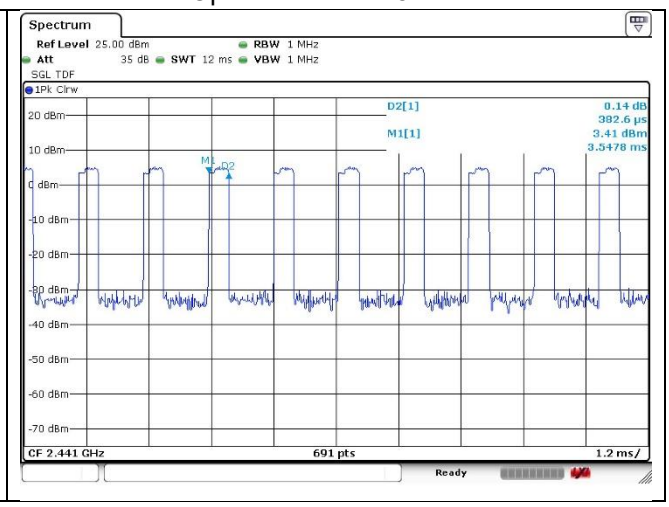

7.4.2. Packet Type: DH3, 3DH3

Operation Mode	Frequency (㎒)	Dwell Time (㎳)	Time of occupancy on the Tx Channel in 31.6 sec (㎳)	Limit for time of occupancy on the Tx Channel in 31.6 sec (㎳)
GFSK	2 441	1.62	259.20	400
8DPSK	2 441	1.62	259.20	400

Remark;

Time of occupancy on the TX channel in 31.6 sec
In case of GFSK and 8DPSK: 1.62 × {(1 600 ÷ 4) / 79} × 31.6 = 259.20 ㎳

- Test plots

Operation Mode: GFSK

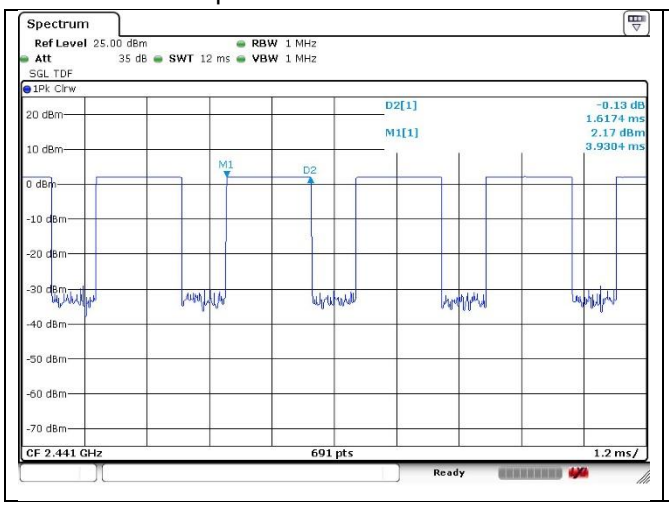

Operation Mode: 8DPSK

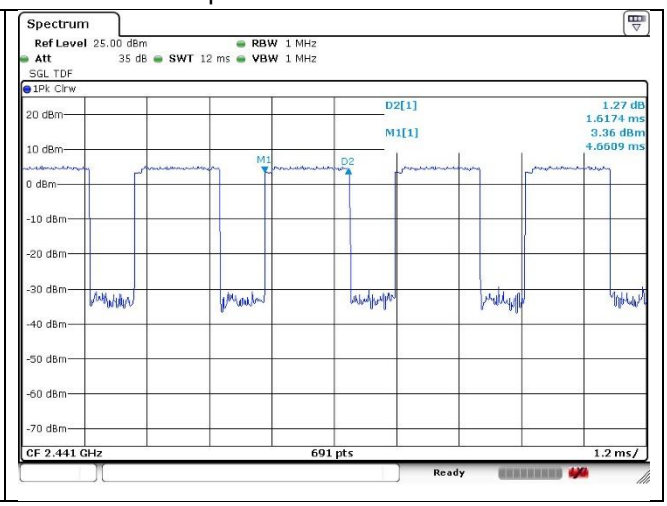

7.4.3. Packet Type: DH5, 3DH5

Operation Mode	Frequency (MHz)	Dwell Time (ms)	Time of occupancy on the Tx Channel in 31.6 sec (ms)	Limit for time of occupancy on the Tx Channel in 31.6 sec (ms)
GFSK	2 441	2.87	306.13	400
8DPSK	2 441	2.87	306.13	400

Remark;

Time of occupancy on the TX channel in 31.6 sec
In case of GFSK and 8DPSK: 2.87 × {(1 600 ÷ 6) / 79} × 31.6 = 306.13 ㎳

- Test plots

Operation Mode: GFSK

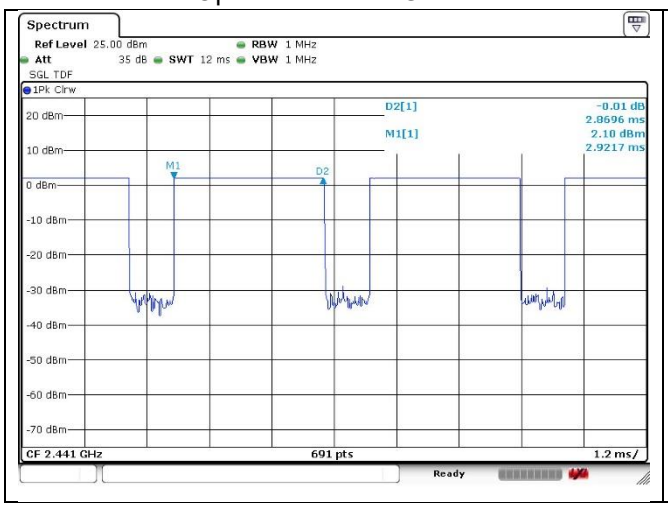

Operation Mode: 8DPSK

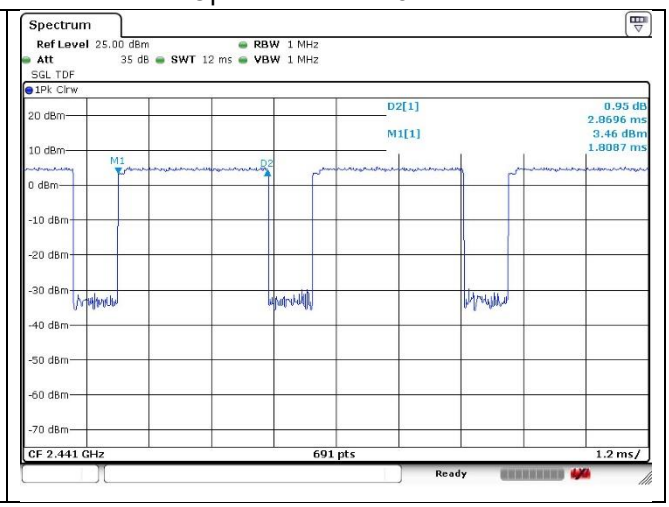

7.4.4. Packet Type: DH1, 3DH1 (Adaptive Frequency Hopping)

Operation Mode	Frequency (MHz)	Dwell Time (ms)	Time of occupancy on the Tx Channel in 8 sec (ms)	Limit for time of occupancy on the Tx Channel in 8 sec (ms)
GFSK	2 441	0.38	60.80	400
8DPSK	2 441	0.38	60.80	400

Remark;

Time of occupancy on the TX channel in 8 sec
In case of GFSK and 8DPSK: 0.38 × {(800 ÷ 2) / 20} × 8 = 60.80 ㎳

- Test plots

Operation Mode: GFSK

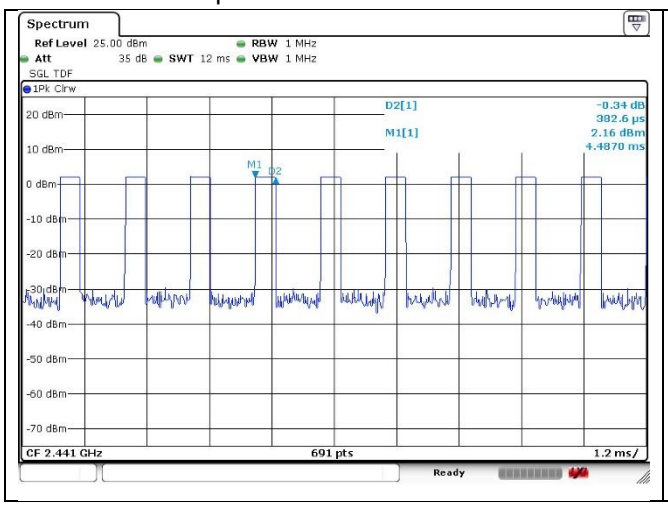

Operation Mode: 8DPSK

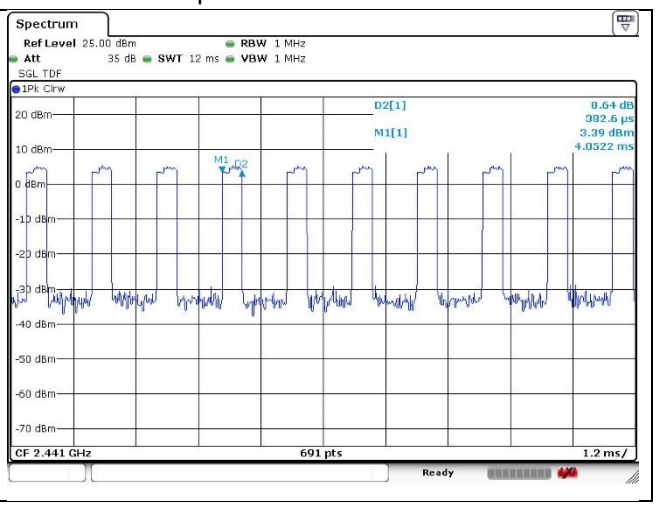

7.4.5. Packet Type: DH3, 3DH3 (Adaptive Frequency Hopping)

Operation Mode	Frequency (MHz)	Dwell Time (ms)	Time of occupancy on the Tx Channel in 8 sec (ms)	Limit for time of occupancy on the Tx Channel in 8 sec (ms)
GFSK	2 441	1.62	129.60	400
8DPSK	2 441	1.62	129.60	400

Remark;

Time of occupancy on the TX channel in 8 sec
In case of GFSK and 8DPSK: 1.62 × {(800 ÷ 4) / 20} × 8 = 129.60 ㎳

- Test plots

Operation Mode: GFSK

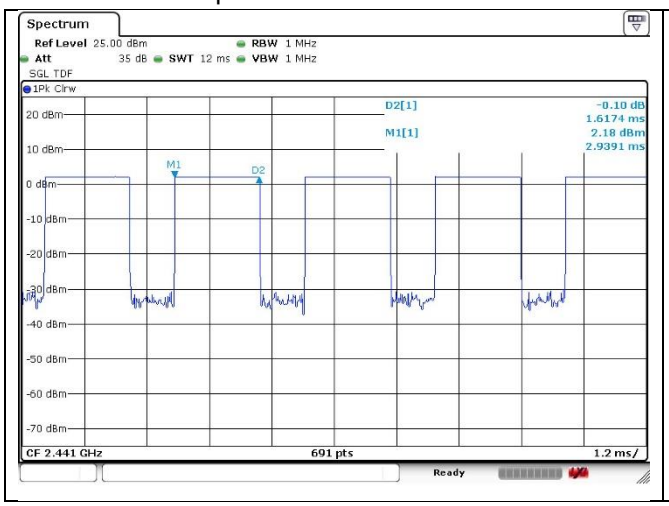

Operation Mode: 8DPSK

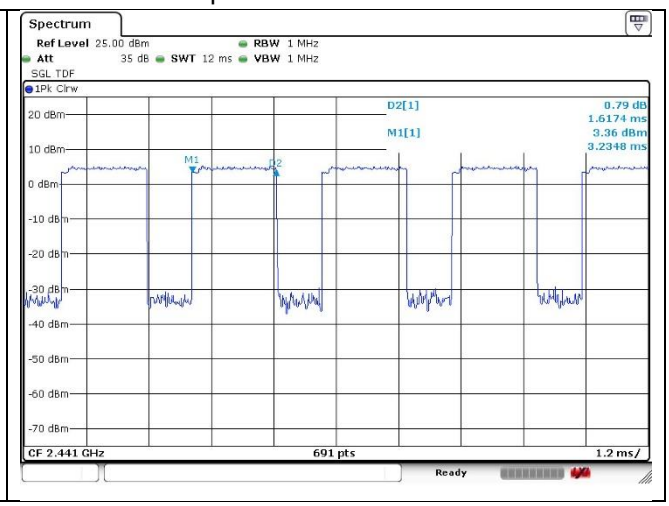

7.4.6. Packet Type: DH5, 3DH5 (Adaptive Frequency Hopping)

Operation Mode	Frequency (㎒)	Dwell Time (㎳)	Time of occupancy on the Tx Channel in 8 sec (㎳)	Limit for time of occupancy on the Tx Channel in 8 sec (㎳)
GFSK	2 441	2.87	153.07	400
8DPSK	2 441	2.89	154.13	400

Remark;

Time of occupancy on the TX channel in 8 sec
In case of GFSK: 2.87 × {(800 ÷ 6) / 20} × 8 = 153.07 ㎳
In case of 8DPSK: 2.89 × {(800 ÷ 6) / 20} × 8 = 154.13 ㎳

- Test plots

Operation Mode: GFSK

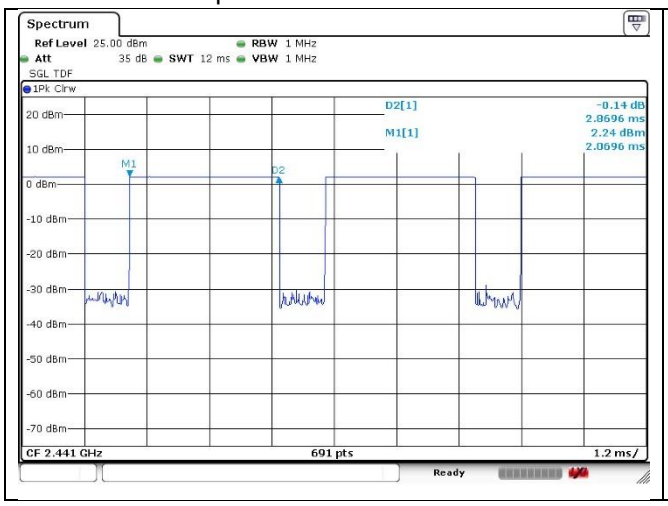

Operation Mode: 8DPSK

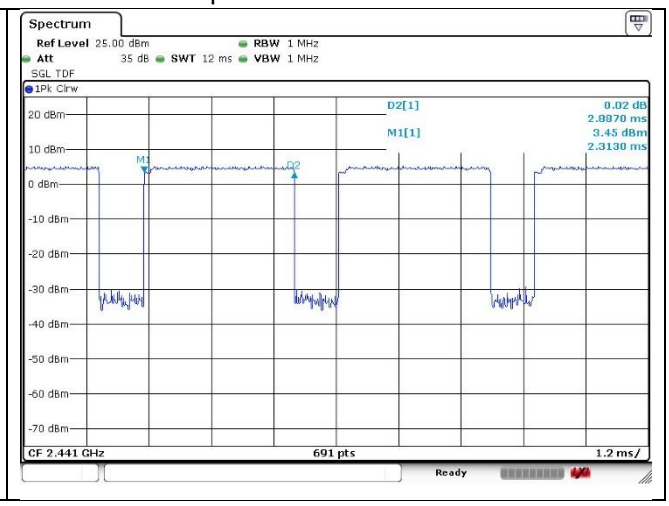

8. AC Power Line Conducted Emission

8.1. Test Setup

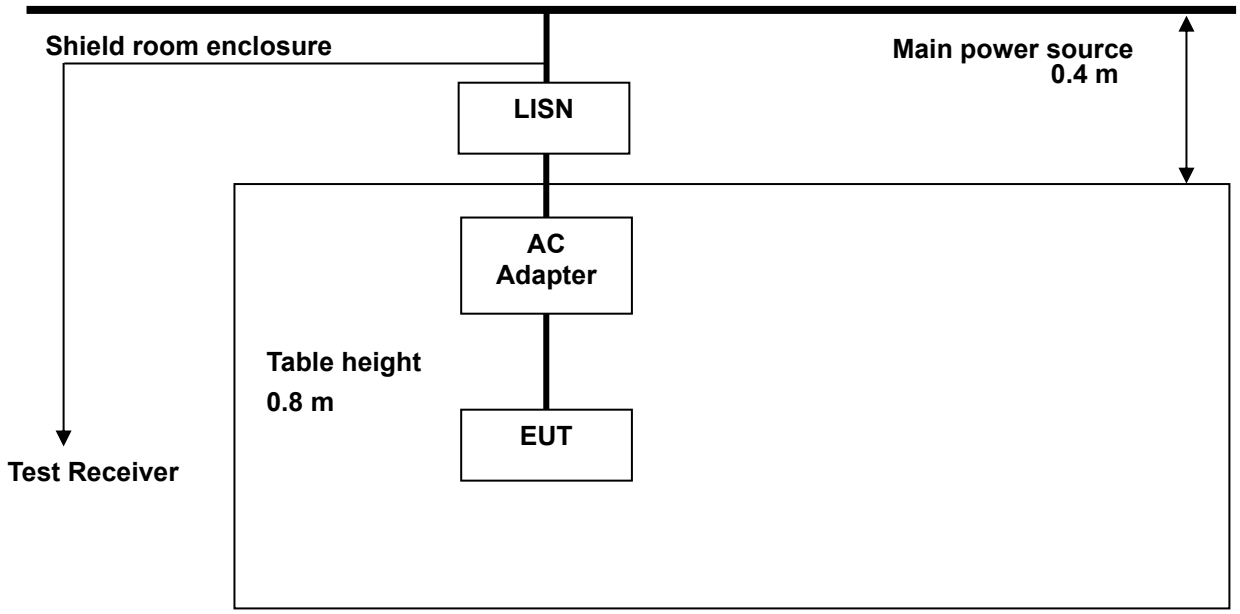

8.2. Limit

8.2.1. FCC

According to §15.207(a), for an intentional radiator that is designed to be connected to the public utility (AC) power line, the radio frequency voltage that is conducted back onto the AC power line on any frequency or frequencies, within the band 150 ㎑ to 30 ㎒, shall not exceed the limits in the following table, as measured using a 50 μH /50 ohms line impedance stabilization network (LISN).

Compliance with the provision of this paragraph shall be based on the measurement of the radio frequency voltage between each power line and ground at the power terminal. The lower limit applies at the boundary between the frequency ranges.

Frequency of emission (㎒)	Conducted limit (dBμV)	
	Quasi-peak	Average
0.15-0.5	66 to 56*	56 to 46*
0.5-5	56	46
5-30	60	50

* Decreases with the logarithm of the frequency.

8.2.2. IC

RSS-Gen Issue 5, 8.8, Unless stated otherwise in the applicable RSS, for radio apparatus that are designed to be connected to the public utility AC power network, the radio frequency voltage that is conducted back onto the AC power line on any frequency or frequencies within the range 150 ㎑ to 30 ㎒ shall not exceed the limits in table 4, as measured using a 50 μH / 50 Ω line impedance stabilization network. This requirement applies for the radio frequency voltage measured between each power line and the ground terminal of each AC power-line mains cable of the EUT.

For an EUT that connects to the AC power lines indirectly, through another device, the requirement for compliance with the limits in table 4 shall apply at the terminals of the AC power-line mains cable of a representative support device, while it provides power to the EUT. The lower limit applies at the boundary between the frequency ranges. The device used to power the EUT shall be representative of typical applications.

Table 4 - AC power-line conducted emissions limits

Frequency (㎒)	Conducted limit (dBμV)	
	Quasi-peak	Average
0.15-0.5	66 to 56[1]	56 to 46[1]
0.5-5	56	46
5-30	60	50

Note 1: The level decreases linearly with the logarithm of the frequency.

For an EUT with a permanent or detachable antenna operating between 150 ㎑ and 30 ㎒, the AC power-line conducted emissions must be measured using the following configurations:

(a) Perform the AC power-line conducted emissions test with the antenna connected to determine compliance with the limits of table 4 outside the transmitter's fundamental emission band.

(b) Retest with a dummy load instead of the antenna to determine compliance with the limits of table 4 within the transmitter's fundamental emission band. For a detachable antenna, remove the antenna and connect a suitable dummy load to the antenna connector. For a permanent antenna, remove the antenna and terminate the RF output with a dummy load or network that simulates the antenna in the fundamental frequency band.

8.3. Test Procedures

AC conducted emissions from the EUT were measured according to the dictates of ANSI C63.10-2013

1. The test procedure is performed in a 6.5 m × 3.5 m × 3.5 m (L × W × H) shielded room. The EUT along with its peripherals were placed on a 1.0 m (W) × 1.5 m (L) and 0.8 m in height wooden table and the EUT was adjusted to maintain a 0.4 meter space from a vertical reference plane.
2. The EUT was connected to power mains through a line impedance stabilization network (LISN) which provides 50 ohm coupling impedance for measuring instrument and the chassis ground was bounded to the horizontal ground plane of shielded room.
3. All peripherals were connected to the second LISN and the chassis ground also bounded to the horizontal ground plane of shielded room.
4. The excess power cable between the EUT and the LISN was bundled. The power cables of peripherals were unbundled. All connecting cables of EUT and peripherals were moved to find the maximum emission.

8.4. Test Results

The following table shows the highest levels of conducted emissions on both phase of Hot and Neutral line.

Ambient temperature : (23 ± 1) ℃
Relative humidity : 47 % R.H.

Frequency range : 0.15 ㎒ - 30 ㎒
Measured Bandwidth : 9 ㎑

FREQ.	LEVEL (dBμV)		LINE	LIMIT (dBμV)		MARGIN (dB)	
(㎒)	Q-Peak	Average		Q-Peak	Average	Q-Peak	Average
0.22	33.80	22.60	N	62.82	52.82	29.02	30.22
0.89	18.20	12.50	N	56.00	46.00	37.80	33.50
2.00	39.50	34.70	N	56.00	46.00	16.50	11.30
6.00	40.10	35.00	N	60.00	50.00	19.90	15.00
10.00	40.50	33.90	N	60.00	50.00	19.50	16.10
22.00	50.20	36.00	N	60.00	50.00	9.80	14.00
0.21	36.00	28.20	H	63.21	53.21	27.21	25.01
0.47	34.20	25.20	H	56.51	46.51	22.31	21.31
2.00	47.50	42.50	H	56.00	46.00	8.50	3.50
6.00	45.70	40.50	H	60.00	50.00	14.30	9.50
10.00	46.00	40.90	H	60.00	50.00	14.00	9.10
22.00	49.60	43.50	H	60.00	50.00	10.40	6.50

Remark;

1. Line (H): Hot, Line (N): Neutral.
2. All data rates and modes of operation were investigated and the worst-case emissions were reported using **EDR / 3DH5 / High channel.**
3. The limit for Class B device(s) from 150 ㎑ to 30 ㎒ are specified in Section of the Title 47 CFR.
4. Traces shown in plot were made by using a Quasi peak detector and average detector.
5. Deviations to the Specifications: None.

- Test plots

Test mode: (Neutral)

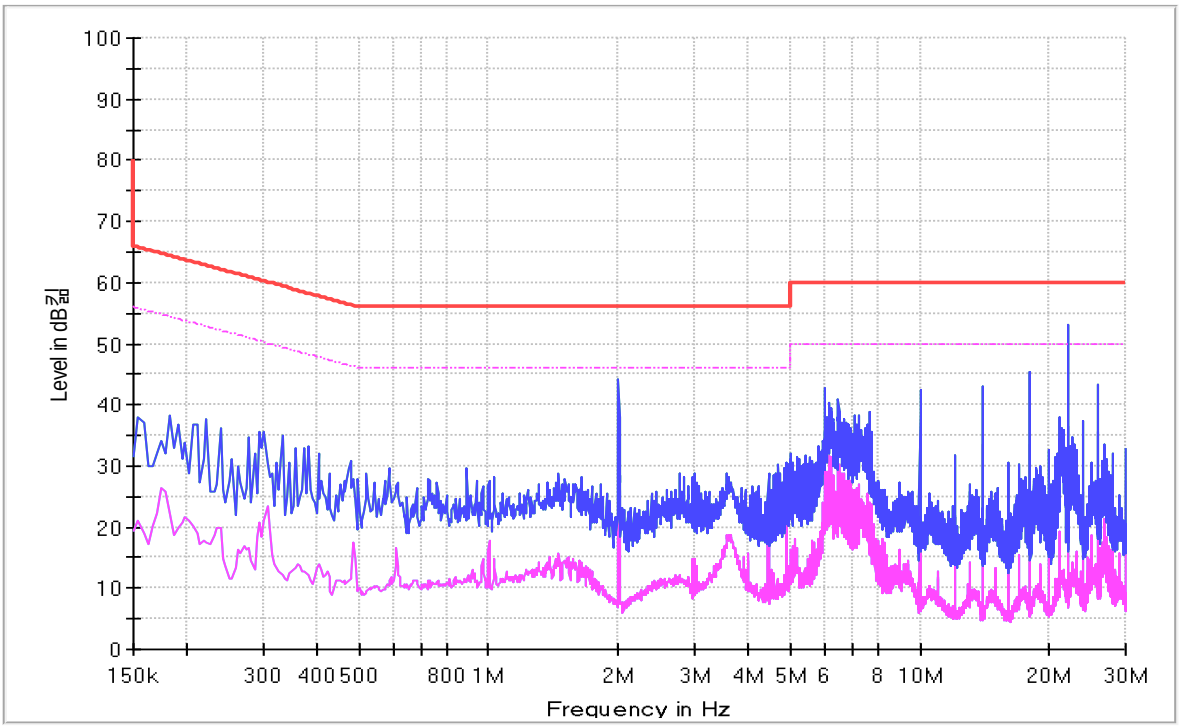

Test mode: (Hot)

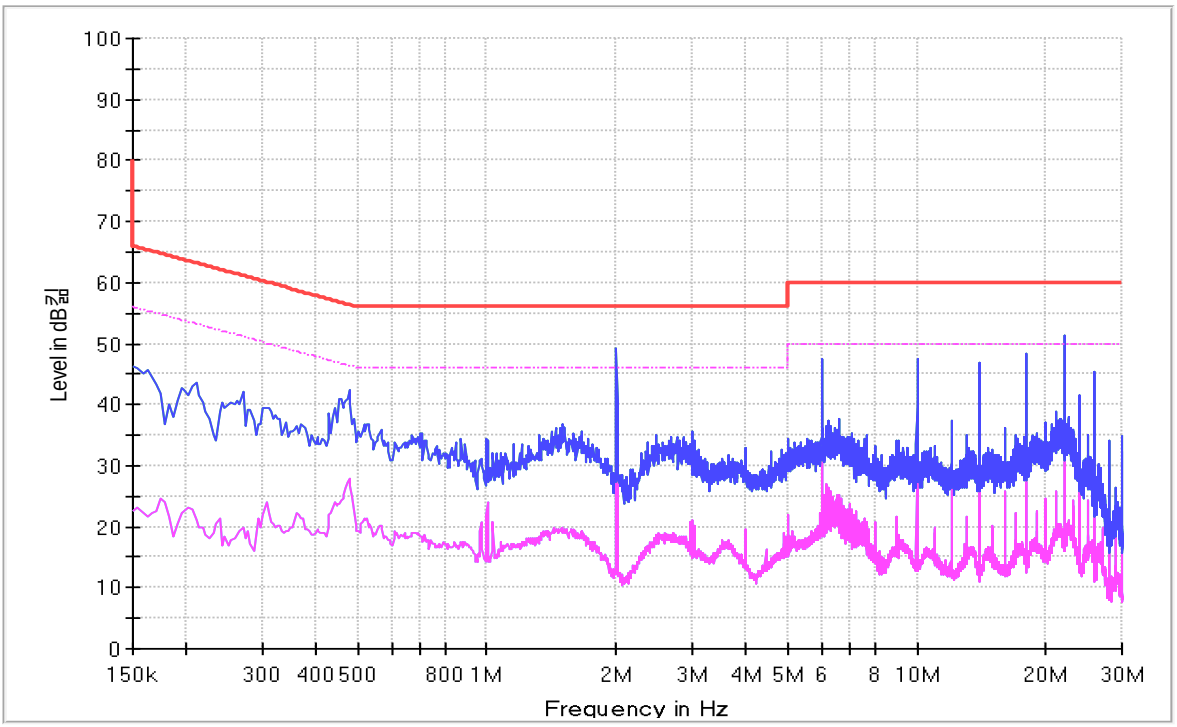

9. Antenna Requirement

9.1. Standard Applicable

For intentional device, according to FCC 47 CFR Section §15.203, an intentional radiator shall be designed to ensure that no antenna other than that furnished by the responsible party shall be used with the device. The use of a permanently attached antenna or of an antenna that uses a unique coupling to the intentional radiator shall be considered sufficient to comply with the provisions of this section. The manufacturer may design the unit so that a broken antenna can be replaced by the user, but the use of a standard antenna jack or electrical connector is prohibited. And according to FCC 47 CFR Section §15.247(b) if transmitting antennas of directional gain greater than 6 dBi are used, the power shall be reduced by the amount in dB that the gain of the antenna exceeds 6 dBi.

9.2. Antenna Connected Construction

Antenna used in this product is Multilayer Chip Antenna with gain of 3.06 dBi.

- End of the Test Report -