Test Report
20-1-0063601T08a-C01

DAkkS Deutsche Akkreditierungsstelle
D-PL-12047-01-01
D-PL-12047-01-03
D-PL-12047-01-04

Number of pages:	26	**Date of Report:**	2022-Jan-19
Testing company:	CETECOM GmbH Im Teelbruch 116 45219 Essen Germany Tel. + 49 (0) 20 54 / 95 19-0 Fax: + 49 (0) 20 54 / 95 19-150	**Applicant:**	WITTE Velbert GmbH & Co KG
Product: **Model:**	**Automotive NFC Outer Door Handle** **DH421**		
FCC ID:	V2T-DH421	**IC:**	7575A-DH421
Testing has been carried out in accordance with:	**Title 47 CFR, Chapter I** **FCC Regulations, Subchapter A** Part 15, Subpart C: §15.225 **ANSI C63.10-2013 chapter 6.4/5/8/9** **ISED Regulations** RSS-Gen, Issue 5 + Amendment 2 RSS-210, Issue 10 Deviations, modifications or clarifications (if any) to above mentioned documents are written in each section under "Test method and limit".each section under "Test method and limit".		
Tested Technology:	SRD		
Test Results:	**☒ The EUT complies with the requirements in respect of all parameters subject to the test.** The test results relate only to devices specified in this document The current version of Test Report CETECOM_TR20-1-0063601T08a_C01 replaces the test report CETECOM_TR20-1-0063601T08a dated 2021-Nov-11. The replaced test report is herewith invalid.		
Signatures:	Dipl.-Ing. Ninovic Perez Test Lab Manager Authorization of test report		M.Sc. Guangcheng Huang Test manager Responsible of test report

Table of Contents

Table of Annex 3
1 General information 4
1.1 Disclaimer and Notes 4
1.2 Attestation 4
1.3 Summary of Test Results 5
1.4 Summary of Test Methods 6
2 Administrative Data 7
2.1 Identification of the Testing Laboratory 7
2.2 General limits for environmental conditions 7
2.3 Test Laboratories sub-contracted 7
2.4 Organizational Items 7
2.5 Applicant's details 7
2.6 Manufacturer's details 7
2.7 EUT: Type, S/N etc. and short descriptions used in this test report 8
2.8 Auxiliary Equipment (AE): Type, S/N etc. and short descriptions 8
2.9 Connected cables 8
2.10 Software 8
2.11 EUT set-ups 8
2.12 EUT operation modes 8
3 Equipment under test (EUT) 9
3.1 General Data of Main EUT as Declared by Applicant 9
3.2 Detailed Technical data of Main EUT as Declared by Applicant 10
3.3 Modifications on Test sample 10
4 Measurements 11
4.1 Radiated field strength emissions and emission mask 11
4.2 Radiated field strength emissions below 30 MHz 13
4.3 Radiated field strength emissions 30 MHz – 1 GHz 17
4.4 Occupied Channel Bandwidth 99% 19
4.5 Frequenzy stability 20
4.6 Results from external laboratory 23
4.7 Opinions and interpretations 23
4.8 List of abbreviations 23
5 Equipment lists 24
5.1 Legend 24
6 Measurement Uncertainty valid for conducted/radiated measurements 25
7 Versions of test reports (change history) 26

Table of Annex			
Annex No.	**Contents**	**Reference Description**	**Total Pages**
Annex 1	Test result diagrams	**CETECOM_TR20-1-0063601T08a_C01_A1**	15
Annex 2	Internal photographs of EUT	**Provided by applicant**	--
Annex 3	External photographs of EUT	**CETECOM_TR20-1-0063601T08a_C01_A3**	7
Annex 4	Test set-up photographs	**CETECOM_TR20-1-0063601T08a_C01_A4**	6
The listed attachments are separate documents.			

1 General information

1.1 Disclaimer and Notes

The test results of this test report relate exclusively to the test item specified in this test report as specified in chapter 2.7. CETECOM does not assume responsibility for any conclusions and generalizations drawn from the test results with regard to other specimens or samples of the type of the equipment represented by the test item.
The test report may only be reproduced or published in full. Reproduction or publication of extracts from the report requires the prior written approval of CETECOM.
The testing service provided by CETECOM has been rendered under the current "General Terms and Conditions for CETECOM".
CETECOM will not be liable for any loss or damage resulting from false, inaccurate, inappropriate or incomplete product information provided by the customer.
Under no circumstances does the CETECOM test report include any endorsement or warranty regarding the functionality, quality or performance of any other product or service provided.
Under no circumstances does the CETECOM test report include or imply any product or service warranties from CETECOM, including, without limitation, any implied warranties of merchantability, fitness for purpose, or non-infringement, all of which are expressly disclaimed by CETECOM.
All rights and remedies regarding vendor’s products and services for which CETECOM has prepared this test report shall be provided by the party offering such products or services and not by CETECOM.
In no case this test report can be considered as a Letter of Approval.

This test report is electronically signed and valid without handwritten signature. For verification of the electronic signatures, the public keys can be requested at the testing laboratory.

The test report must always be reproduced in full; reproduction of an excerpt only is subject to written approval of the testing laboratory. The documentation of the testing performed on the tested devices is archived for 10 years at CETECOM.

Also we refer on special conditions which the applicant should fulfill according §2.927 to §2.948, special focus regarding modification of the equipment and availability of sample equipment for market surveillance tests.

1.2 Attestation

I declare that all measurements were performed by me or under my supervision and that all measurements have been performed and are correct to my best knowledge and belief to Industry Canada standards. All of the above requirements are met in accordance with enumerated standards.

1.3 Summary of Test Results

The EUT integrates a RFID transmitter working at 13.56 MHz. Other implemented wireless technologies were not considered within this test report.

Test case	Reference Clause FCC ☒	Reference Clause ISED ☒	Page	Remark	Result
Radiated field strength emissions and emission mask	§15.225(a)(b)(c)(d)	RSS-210, Issue 10, Annex B.6 (a)	11	--	PASSED
Radiated field strength emissions below 30 MHz	§15.209(a)	RSS-Gen: Issue 5 §8.9 Table 6	13	--	PASSED
Radiated field strength emissions 30 MHz – 1 GHz	§15.209(a)	RSS-Gen: Issue 5 §8.9 Table 5	17	--	PASSED
Occupied Channel Bandwidth 99%	§2.202(a) §2.1049(h)	RSS-Gen, Issue 5, §6.6	19	--	PASSED
Frequency stability	§2.1055 §15.225(e)	RSS-210, Issue 10, Annex B.6 (b)	20	--	PASSED
AC-Power Lines Conducted Emissions	§15.207	RSS-Gen Issue 5: §8.8, Table 4	--	--	N/A

PASSED	The EUT complies with the essential requirements in the standard.
FAILED	The EUT does not comply with the essential requirements in the standard.
NP	The test was not performed by the CETECOM Laboratory.
N/A	Not applicable

*The calculation of the measurement uncertainty shows compliance with the "maximum measurement uncertainties" of the tested standard and therefore for result evaluation the stated uncertainties will not be additionally added to the measured results.

1.4 Summary of Test Methods

Test case	Test method
Radiated field strength emissions and emission mask	ANSI C63.10-2013
Radiated field strength emissions below 30 MHz	ANSI C63.10-2013; §6.4
Radiated field strength emissions 30 MHz- 1 GHz	ANSI C63.10-2013; §6.5
Occupied Channel Bandwidth 99%	ANSI C63.10-2013; §6.9
Frequency stability tests	ANSI C63.10-2013; §6.8
AC-Power Lines Conducted Emissions	ANSI C63.10-2013; §6.2

And reference also to Test methods in KDB558074

2 Administrative Data

2.1 Identification of the Testing Laboratory

Company name:	CETECOM GmbH
Address:	Im Teelbruch 116 45219 Essen - Kettwig Germany
Responsible for testing laboratory:	Dipl.-Ing. Ninovic Perez
Accreditation scope:	**DAkkS Webpage: FCC ISED**
Test location:	CETECOM GmbH; Im Teelbruch 116; 45219 Essen - Kettwig

2.2 General limits for environmental conditions

Temperature:	22±2 °C
Relative. humidity:	45±15% rH

2.3 Test Laboratories sub-contracted

Company name:	--

2.4 Organizational Items

Responsible test manager:	M.Sc. Guangcheng Huang
Receipt of EUT:	2021-Oct-19
Date(s) of test:	2021-Oct-19 – 2021-Oct-26
Version of template:	21.1001

2.5 Applicant's details

Applicant's name:	WITTE Velbert GmbH & Co KG
Address:	Höferstr. 3 - 15 42551 Velbert North Rhine-Westphalia Germany
Contact Person:	Kay Lackmann
Contact Person's Email:	kay.lackmann@witte-automotive.de

2.6 Manufacturer's details

Manufacturer's name:	WITTE Velbert GmbH & Co KG
Address:	Höferstr. 3 - 15 42551 Velbert Germany

2.7 EUT: Type, S/N etc. and short descriptions used in this test report

Short description*)	PMT Sample No.	Product	Model	Type	S/N	HW status	SW status
EUT 01	20-1-00636S10_C01	Automotive NFC Outer Door Handle	DH421	N/A	V6-01042631031-10 LH	V6.0.0	15.03.08
EUT 02	20-1-00636S18_C01	Automotive NFC Outer Door Handle	DH421	N/A	V6-01042630031-17 LH	V6.0.0	15.03.08

*) EUT short description is used to simplify the identification of the EUT in this test report.

2.8 Auxiliary Equipment (AE): Type, S/N etc. and short descriptions

Short description*)	PMT Sample No.	Auxiliary Equipment	Type	S/N	HW status	SW status
AE 01	20-1-00636S19_C01	NFC-tag 13.56 MHz	N/A	N/A	N/A	N/A

*) AE short description is used to simplify the identification of the auxiliary equipment in this test report.

2.9 Connected cables

Short description*)	PMT Sample No.	Cable type	Connectors	Length
CAB 01	20-1-00636S20_C01	Power cable with filter test box	Banana plug, MCON 1-1703506-1	125 cm

*) CAB short description is used to simplify the identification of the connected cables in this test report.

2.10 Software

Short description*)	PMT Sample No.	Software	Type	S/N	HW status	SW status
--	--	--	--	--	--	--

*) SW short description is used to simplify the identification of the used software in this test report.

2.11 EUT set-ups

set-up no.*)	Combination of EUT and AE	Description
Set. 1	EUT 01 + CAB 01	Used for radiated measurements. EUT put in a holder. Op. 1 without NFC-tag
Set. 2	EUT 02 + AE 01 + CAB 01	Used for radiated measurements under normal and extreme conditions. EUT and NFC-tag put in a holder 30 mm apart. Op. 2 with NFC-tag

*) EUT set-up no. is used to simplify the identification of the EUT set-up in this test report.

2.12 EUT operation modes

EUT operating mode no.*1)	Operating modes	Additional information
Op. 1	TX	EUT continuously transmitting an unmodulated carrier at 13.56 MHz
Op. 2	TXRX	EUT continuously modulated communication between EUT and NFC-tag at 13.56 MHz

*1) EUT operating mode no. is used to simplify the test report.

3 Equipment under test (EUT)

3.1 General Data of Main EUT as Declared by Applicant

Product name	Volvo outer door handle DH421		
Kind of product	Automotive door handle with RFID reader		
Firmware	☐ for normal use	☒ Special version for test execution	
Power supply	☐ AC Mains	-	
	☒ DC Mains	**12** V DC via **banana** Connector	
	☐ Battery	-	
Operational conditions	T_{nom} =21 °C	T_{min} =-40 °C	T_{max} =+80 °C
EUT sample type	**Engineering Samples**		
Weight	0.1 kg		
Size [LxWxH]	20 cm x 3 cm x 2 cm		
Interfaces/Ports	--		
For further details refer Applicants Declaration & following technical documents **Volvo_DH421_Report_Questionnaire_20211027_draft2; 27.10.2021** **E0042631000-DR_01-01; 04.03.20**			

3.2 Detailed Technical data of Main EUT as Declared by Applicant

Frequency Band	13.335 MHz – 13.567 MHz
Number of Channels (USA/Canada -bands)	1 nominal at 13.56 MHz
Nominal Channel Bandwidth	Not reported
Type of Modulation | Data Rate	Transmit: MILLER coding Receive: LOAD modulation
Other installed options	None
Antenna Type	Loop antenna
Antenna Gain	Not reported
FCC label attached	Yes
Test firmware / software and storage location	EUT

For further details refer Applicants Declaration & following technical documents

Description of Reference Document (supplied by applicant)	Version	Total Pages
VOLVO_Outer_Door_Handle_Model_DH421_Operational_Description_20210920_KL	**--**	**23**
Volvo_DH421_Block_Diagram	**--**	**1**
VOLVO_DH421_SCHEMATIC_01042631032_PCB_NFC_LH_V6_2_0	**V6..2.x**	**9**
VOLVO_DH421_BOM_P04949_SPA2_01042631032_NFC,LED_V6_2_0	**--**	**1**
VOLVO_DH421_Layer_01042631032_PCB_NFC_LED_LH	**--**	**13**

3.3 Modifications on Test sample

Additions/deviations or exclusions	--

4 Measurements

4.1 Radiated field strength emissions and emission mask

4.1.1 Description of the general conducted test setup and methodology, see below example:

Evaluating the radiated field emissions are done first by an exploratory emission measurement and a final measurement for most critical frequencies determined.
The loop antenna was placed at 1 m height above ground plane and 3 m measurement distance from set-up for investigations. Because of reduced measurement distance, correction data were applied, as stated in chapter "General Limit - Radiated field strength emissions below 30 MHz". The tests are performed in the semi anechoic room recognized by the regulatory commission.

Schematic:

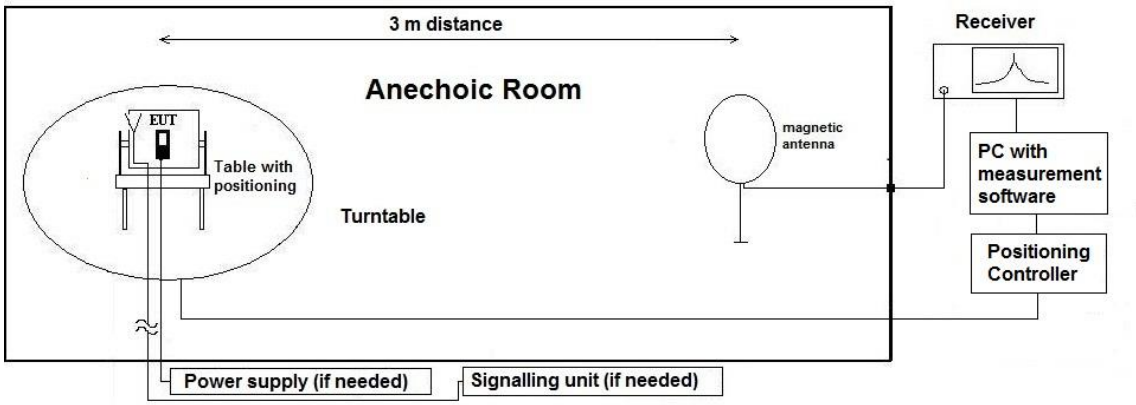

Testing method:

The measurement is made according to relevant reference clauses:
(See Tables *Summary of Test Results* and *Summary of Test Methods* on page 5)

4.1.2 Measurement Location

Test site	120901 - SAC - Radiated Emission <1GHz

4.1.3 Limit

Frequency Range [MHz]	Limit [µV/m]	Limit [dBµV/m]	Detector	RBW [kHz]	Remark
13.553 – 13.567	15.848	84	PEAK	10	PEAK, TRACE max-hold mode, repetitive scan for exploratory measurements Quasi-Peak, for final measurement on critical frequencies (f<1GHz)
13.410 – 13.553 and 13.567 – 13.710	334	50.47			
13.110 – 13.410 and 13.710 – 14.010	106	40.5			
f ≤ 13.110 – 14.010 ≥ f	30	29.5			

4.1.4 Result

Diagram	Channel	Mode	Maximum Level PK [dBµV/m]	Result
2.01	1	Op. 1 TX / EUT standing	34.388	PASSED
2.02	1	OP. 2 TXRX / EUT standing	33.370	PASSED
2.03	1	Op.1 TX / EUT lying	18.506	PASSED
2.04	1	Op. 2 TXRX / EUT lying	23.599	PASSED

Remark 1: for more information and graphical plot see annex A1 **CETECOM_TR20-1-0063601T08a_C01_A1**
Remark 2: worst case position is determined to be the standing position, therefore further tests are only performed on EUT in standing position

4.2 Radiated field strength emissions below 30 MHz

4.2.1 Description of the general test setup and methodology, see below example:

Evaluating the radiated field emissions are done first by an exploratory emission measurement and a final measurement for most critical frequencies determined.

The loop antenna was placed at 1 m height above ground plane and 3 m measurement distance from set-up for investigations. Because of reduced measurement distance, correction data were applied, as stated in chapter "General Limit - Radiated field strength emissions below 30 MHz". The tests are performed in the semi anechoic room recognized by the regulatory commission.

Schematic:

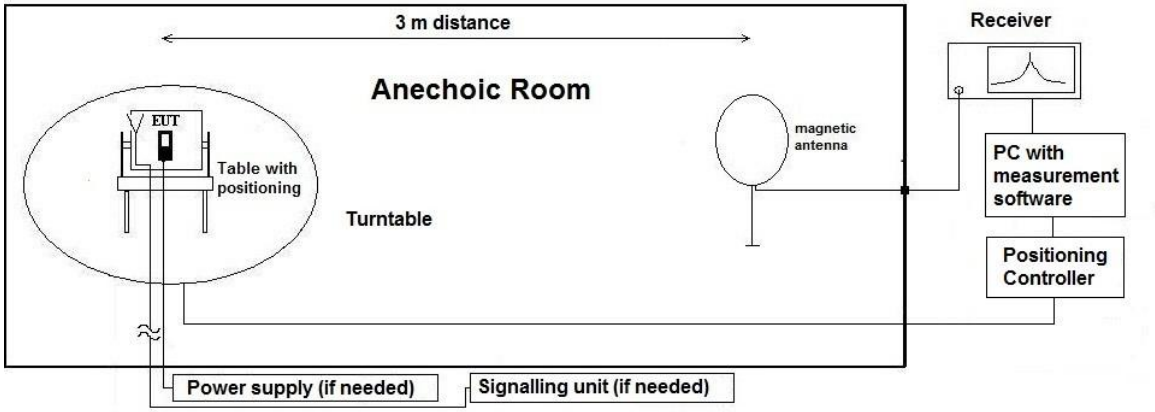

Testing method:

The measurement is made according to relevant reference clauses:
(See Tables *Summary of Test Results* and *Summary of Test Methods* on page 6)

Exploratory, preliminary measurements
The EUT and its associated accessories are placed on a non-conductive position manipulator (tipping device) of 0.8 m height which is placed on the turntable. By rotating the turntable (step 90°, range 0°to 360°) and the EUT itself either on 3-orthogonal axis (portable equipment) or 2-orthogonal axis (defined operational position of EUT), the emission spectrum was recorded.

The loop antenna was moved at least to 2-perpendicular axes (antenna vector in direction of EUT and parallel to EUT) in order to maximize the emissions. The results are documented in a diagram. Critical frequencies (low margin to limit) are saved within a data reduction table for further investigations. If various operating modes are supported, further investigations are made to find the worst-case. Also the interconnection cables and equipment position were varied in order to maximize the emissions.

Final measurement on critical frequencies
Based on the exploratory measurements, the most critical frequencies are re-measured by main-taining the EUT's worst-case operation mode, cable position, etc.

First a frequency zoom around the critical frequency is done to locate the frequency more precisely. After this step, for all identified critical frequencies, the maximum peak was determined.

Following parameters were varied: the turntable angle continuously in the range 0 to 360 degree, the EUT itself either over 3-orthogonal axis (not defined usage position) or 2-orthogonal axis (defined usage position).

On the determined worst-case position, a final measurement with necessary bandwidth and detector according standard has been carried out.

Formula:

$E_C = E_R + AF + C_L + D_F - G_A$

$M = L_T - E_C$

AF = Antenna factor
C_L = Cable loss
D_F = Distance correction factor (if used)
E_C = Electrical field – corrected value
E_R = Receiver reading
G_A = Gain of pre-amplifier (if used)
L_T = Limit
M = Margin

All units are dB-units, positive margin means value is below limit.

4.2.2 Measurement Location

Test site	120901 - SAC - Radiated Emission <1GHz

4.2.3 Correction factors due to reduced meas. distance (f < 30 MHz):

The used correction factors when the measurement distance is reduced compared to regulatory measurement distance, are calculated according Extrapolation formulas valid for EUT's with maximum dimension of 0.625xLambda. Formula 2+3+4 as presented in ANSI C63.10, Chapter 6.4.4 are used for the calculations of proper extrapolation factors

Frequency Range	f [kHz/MHz]	Lambda [m]	Far-Field Point [m]	Distance Limit accord. 15.209 [m]	1st Condition (dmeas < Dnear-field)	2nd Condition (Limit distance bigger dnear-field)	Distance Correction accord. Formula
kHz	9	33333.33	5305.17	300	fullfilled	not fullfilled	-80.00
	10	30000.00	4774.65		fullfilled	not fullfilled	-80.00
	20	15000.00	2387.33		fullfilled	not fullfilled	-80.00
	30	10000.00	1591.55		fullfilled	not fullfilled	-80.00
	40	7500.00	1193.66		fullfilled	not fullfilled	-80.00
	50	6000.00	954.93		fullfilled	not fullfilled	-80.00
	60	5000.00	795.78		fullfilled	not fullfilled	-80.00
	70	4285.71	682.09		fullfilled	not fullfilled	-80.00
	80	3750.00	596.83		fullfilled	not fullfilled	-80.00
	90	3333.33	530.52		fullfilled	not fullfilled	-80.00
	100	3000.00	477.47		fullfilled	not fullfilled	-80.00
	125	2400.00	381.97		fullfilled	not fullfilled	-80.00
	200	1500.00	238.73		fullfilled	fullfilled	-78.02
	300	1000.00	159.16		fullfilled	fullfilled	-74.49
	400	750.00	119.37		fullfilled	fullfilled	-72.00
	490	612.24	97.44		fullfilled	fullfilled	-70.23
	500	600.00	95.49	30	fullfilled	not fullfilled	-40.00
	600	500.00	79.58		fullfilled	not fullfilled	-40.00
	700	428.57	68.21		fullfilled	not fullfilled	-40.00
	800	375.00	59.68		fullfilled	not fullfilled	-40.00
	900	333.33	53.05		fullfilled	not fullfilled	-40.00
MHz	1.00	300.00	47.75		fullfilled	not fullfilled	-40.00
	1.59	188.50	**30.00**		fullfilled	not fullfilled	-40.00
	2.00	150.00	23.87		fullfilled	fullfilled	-38.02
	3.00	100.00	15.92		fullfilled	fullfilled	-34.49
	4.00	75.00	11.94		fullfilled	fullfilled	-32.00
	5.00	60.00	9.55		fullfilled	fullfilled	-30.06
	6.00	50.00	7.96		fullfilled	fullfilled	-28.47
	7.00	42.86	6.82		fullfilled	fullfilled	-27.13
	8.00	37.50	5.97		fullfilled	fullfilled	-25.97
	9.00	33.33	5.31		fullfilled	fullfilled	-24.95
	10.00	30.00	4.77		fullfilled	fullfilled	-24.04
	10.60	28.30	4.50		fullfilled	fullfilled	-23.53
	11.00	27.27	4.34		fullfilled	fullfilled	-23.21
	12.00	25.00	3.98		fullfilled	fullfilled	-22.45
	13.56	22.12	3.52		fullfilled	fullfilled	-21.39
	15.00	20.00	3.18		fullfilled	fullfilled	-20.51
	15.92	18.85	**3.00**		fullfilled	fullfilled	-20.00
	17.00	17.65	2.81		not fullfilled	fullfilled	-20.00
	18.00	16.67	2.65		not fullfilled	fullfilled	-20.00
	20.00	15.00	2.39		not fullfilled	fullfilled	-20.00
	21.00	14.29	2.27		not fullfilled	fullfilled	-20.00
	23.00	13.04	2.08		not fullfilled	fullfilled	-20.00
	25.00	12.00	1.91		not fullfilled	fullfilled	-20.00
	27.00	11.11	1.77		not fullfilled	fullfilled	-20.00
	29.00	10.34	1.65		not fullfilled	fullfilled	-20.00
	30.00	10.00	1.59		not fullfilled	fullfilled	-20.00

4.2.4 Limit

Radiated emissions limits, (3 meters)					
Frequency Range [MHz]	Limit [µV/m]	Limit [dBµV/m]	Distance [m]	Detector	RBW [kHz]
0.009 – 0.09	2400 / f [kHz]	67.6 – 20Log(f) (kHz)	300	Pk & Avg	0.2
0.09 – 0.11	2400 / f [kHz]	67.6 – 20Log(f) (kHz)	300	Quasi peak	0.2
0.11 – 0.15	2400 / f [kHz]	67.6 – 20Log(f) (kHz)	300	Pk & Avg	0.2
0.15 – 0.49	2400 / f [kHz]	67.6 – 20Log(f) (kHz)	300	Pk & Avg	9
0.49 – 1.705	24000 / f [kHz]	87.6 – 20Log(f) (kHz)	30	Quasi peak	9
1.705 - 30	30	29.5	30	Quasi peak	9

*Remark: In Canada same limits apply, just unit reference is different

4.2.5 Result

Diagram	Channel	Mode	Maximum Level [dBµV/m] Frequency Range 0.009 – 30 MHz	Result
2.05	1	Op. 1 TX / EUT standing	19.602 (2)	PASSED
2.06	1	Op. 2 TXRX / EUT standing	19.722 (2)	PASSED

Remark 1: for more information and graphical plot see annex A1**CETECOM_TR20-1-0063601T08a_C01_A1**
Remark 2: noise level

4.3 Radiated field strength emissions 30 MHz – 1 GHz

4.3.1 Description of the general test setup and methodology, see below example:

Evaluating the emissions have to be done first by an exploratory emissions measurement and a final measurement for most critical frequencies. The tests are performed in a CISPR 16-1-4:2010 compliant semi anechoic room (SAR) and fully anechoic room (FAR) recognized by the regulatory commission. The measurement distance was set to 3 meter for frequencies up to 18 GHz and 2 meter above 18 GHz. A logarithmic periodic antenna is used for the frequency range 30 MHz to 1 GHz. Horn antennas are used for frequency range 1 GHz to 40 GHz. The EUT is aligned within 3 dB beam width of the measurement antenna with three orthogonal axis measurements on the EUT.

Schematic:

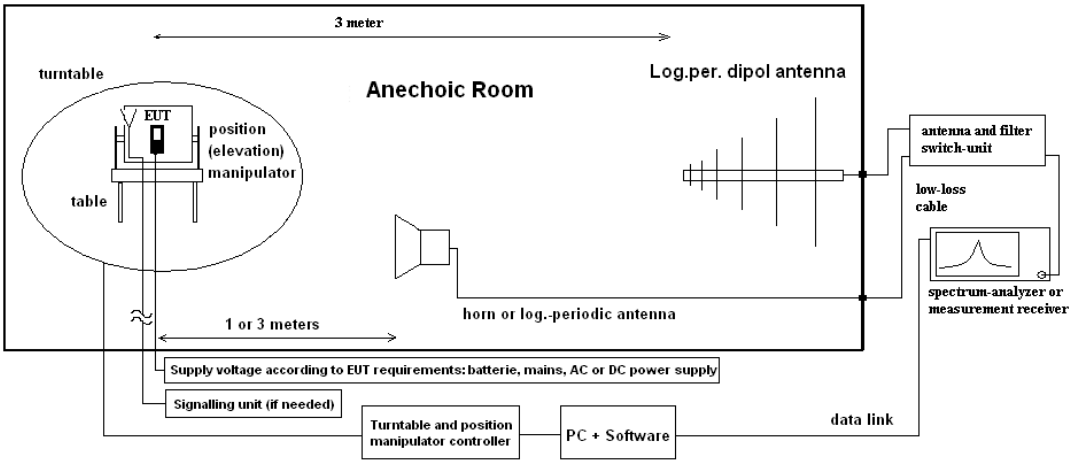

Testing method:

The measurement is made according to relevant reference clauses:
(See Tables *Summary of Test Results* and *Summary of Test Methods* on page 6)

Exploratory, preliminary measurements
The EUT and its associated accessories are placed on a non-conductive position manipulator (tipping device) of 0.8 m height which is placed on the turntable. By rotating the turntable (range 0° to 360°, step 90°) and the EUT itself either on 3-orthogonal axis (portable equipment) or 2-orthogonal axis (defined operational position of EUT) the emission spectrum and its characteristics was recorded with an EMI-receiver, broadband antenna and software.

Measurement antenna: horizontal and vertical, heights: 1,0 m and 1,82 m as worst-case determined by an exploratory emission measurements. The results are documented in a diagram. Critical frequencies (low margin to limit) are saved within a table for further investigations. If various operating modes are supported, further investigations are made to find the worst-case of them. Also the interconnection cables and equipment position were varied in order to maximize the emissions.

Final measurement on critical frequencies
Based on the exploratory measurements, the most critical frequencies are re-measured by maintaining the EUT's worst-case operation mode, cable position, etc. either on 10m OATS or 3m semi-anechoic room.
First a frequency zoom around the critical frequency is done to locate the frequency more precisely. After this step, for all identified critical frequencies, the maximum peak was determined.

Following parameters were varied: the turntable angle continuously in the range 0 to 360 degree, the EUT itself either over 3-orthogonal axis (not defined usage position) or 2-orthogonal axis (defined usage position). The measurement antenna height between 1 m and 4 m.
On the determined worst-case position, a final measurement with necessary bandwidth and detector according standard has been carried out

Formula:

$E_C = E_R + AF + C_L + D_F - G_A$ (1)

$M = L_T - E_C$ (2)

AF = Antenna factor
C_L = Cable loss
D_F = Distance correction factor (if used)
E_C = Electrical field – corrected value
E_R = Receiver reading
G_A = Gain of pre-amplifier (if used)
L_T = Limit
M = Margin

All units are dB-units, positive margin means value is below limit.

4.3.2 Measurement Location

Test site	120901 - SAC - Radiated Emission <1GHz

4.3.3 Limit

Radiated emissions limits, (3 meters)				
Frequency Range [MHz]	Limit [µV/m]	Limit [dBµV/m]	Detector	RBW / VBW [kHz]
30 - 88	100	40.0	Quasi peak	100 / 300
88 - 216	150	43.5	Quasi peak	100 / 300
216 - 960	200	46.0	Quasi peak	100 / 300
960 - 1000	500	54.0	Quasi peak	100 / 300

4.3.4 Result

Diagram	Channel	Mode	Maximum Level [dBµV/m] Frequency Range 30 – 1000 MHz	Result
3.01	1	Op. 1 TX / EUT standing	37.752 (2)	PASSED
3.03	1	Op. 2 TXRX / EUT standing	36.84 (2)	PASSED

Remark 1: for more information and graphical plot see annex A1 **CETECOM_TR20-1-0063601T08a_C01_A1**
Remark 2: Level where the level in relation to the limit is most critical

4.4 Occupied Channel Bandwidth 99%

4.4.1 Description of the general test setup and methodology, see below example:

The EUT's RF-signal is coupled out by a suitable antenna coupling connector (1). The signal is then directly connected to the spectrum – analyzer (4) for specific RF-measurements. The specific attenuation losses for both signal paths/branches are determined prior to the measurement within a set-up calibration. These are then taken into account by correcting the measurement readings on the spectrum-analyzer.

In case an external connector is not available, the coupling unit consists of a near-field antenna which is directly connected to the spectrum analyser. The power level calibration of the spectrum analyser is related to the power levels (field strengths) of the carrier determined in the anechoic-chamber.

Schematic:

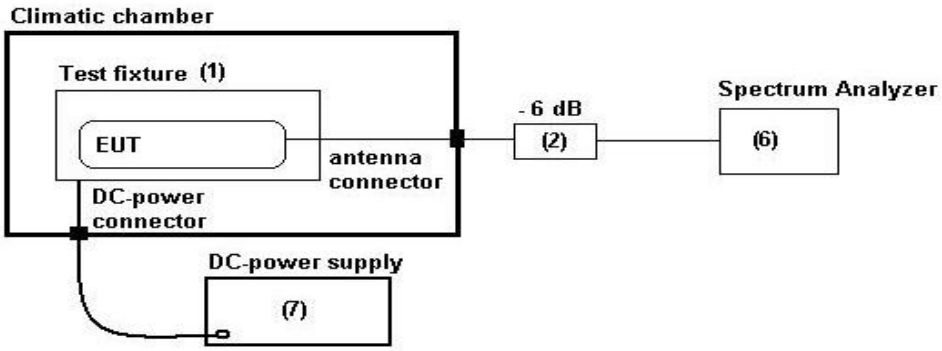

Testing method:

The measurement is made according to relevant reference clauses:
(See Tables *Summary of Test Results* and *Summary of Test Methods* on page 6)

4.4.2 Measurement Location

Test site	120910 - Radio Laboratory 1 (TS 8997)

4.4.3 Limit

When the occupied bandwidth limit is not stated in the applicable reference measurement method, the transmitted signal bandwidth shall be reported as the 99% emission bandwidth, as calculated or measured.

4.4.4 Result

Mode	Channel	Frequency [MHz]	99% Occupied bandwidth [Hz]
Op. 1	1	13.56	11.6
Op. 2	1	13.56	12.1

Remark: for more information and graphical plot see annex A1**CETECOM_TR20-1-0063601T08a_C01_A1**

4.5 Frequency stability

4.5.1 Description of the general test setup and methodology, see below example:

A sniffer antenna acts like a coupling antenna for measuring the fundamental frequency. This is placed at about 20cm away from the equipment. Also connecting cables at the equipment are avoided on the extent possible in order not to degrade the resonance frequency of the equipment and integral antenna.

If the equipment is capable of producing an un-modulated carrier then a trace with max-hold function was recorded. The maximum peak within the span was found, then the frequency deviation was recorded with the build-in frequency counter within the spectrum-analyze. The maximum resolution was chosen on the settings.
The frequency deviation was recorded at switching on point of the equipment and on 2 minutes, 5 minutes and 10 minutes after at in accordance with ANSI 63.10: 2013, Chapter 6.8
All measurements data are enclosed in annex measurements. Here only maximum frequency error is reported.

Schematic:

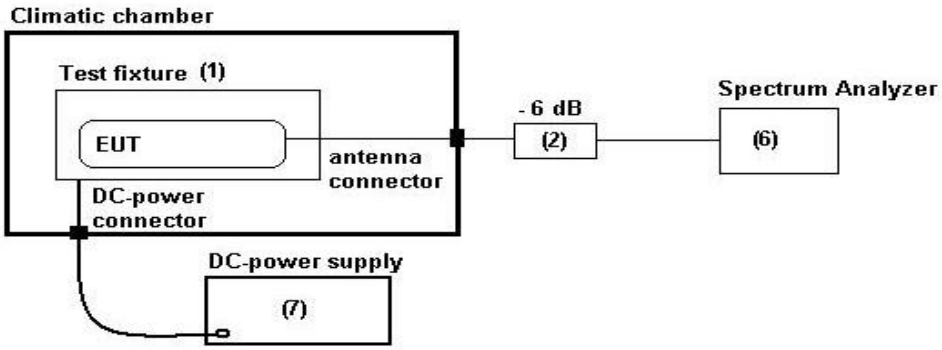

Testing method:

The measurement is made according to relevant reference clauses:
(See Tables *Summary of Test Results* and *Summary of Test Methods* on page 6)

4.5.2 Measurement Location

Test site	120911 - Radio Laboratory 2

4.5.3 Limit

Frequency Range [MHz]	Frequency tolerance			Remarks
	%	[ppm]	[Hz]	
13.553 – 13.567	±0.01	±100	±1355.99207	For voltage variation
13.553 – 13.567	±0.01	±100	±1355.99743	For temperature variation

Remark: for more information and graphical plot see annex A1 **CETECOM_TR20-1-0063601T08a_C01_A1**

4.5.4 Results

4.5.4.1 Results for voltage variation

DC power supply					
Nominal condition					
Vnom = 12 V	13.56029743	MHz	Limit-> 100ppm:	1356.029743	Hz
Tnom = 21°C			f_{MIN}:	13.55894140	MHz
			f_{MAX}:	13.56165346	MHz

Extreme conditions

	Voltage	Frequency measured	Values for Frequency Error		
	[V]	[MHz]	[Hz]	[%]	[ppm]
V_{MAX}	13.80	13.5603000	3	-0.000019	-0.19
	13.40	13.5603089	11	-0.000085	-0.85
	13.00	13.5603099	12	-0.000092	-0.92
	12.60	13.5603098	12	-0.000091	-0.91
	12.20	13.5603081	11	-0.000078	-0.78
	11.80	13.5603078	10	-0.000077	-0.77
	11.40	13.5603074	10	-0.000074	-0.74
	11.00	13.5603022	5	-0.000035	-0.35
	10.60	13.5603017	4	-0.000031	-0.31
V_{MIN}	10.20	13.5603002	3	-0.000020	-0.20

Schrittweite 0.4

Verdict: PASSED

Remark: for more information and graphical plot see annex A1 **CETECOM_TR20-1-0063601T08a_C01_A1**

4.5.4.2 Results for temperature variation

Nominal condition								
Vnom = 12.0V (DC Supply) Tnom = 21°C	Measured Reference frequency [MHz]	13.56029407	Limit-> 100 ppm:	1356.029407	Hz	f_{MIN}:	13.558938	MHz
						f_{MAX}:	13.561650	MHz

Extreme conditions								
Temperature	Measurement period after power-up the EUT	Frequency measured	Values for Frequency Error [Hz]	[%]	[ppm]	Abs. Maximum Value	Absolute Maximum value	Verdict
Tmax=80°C	on StartUp	13.5604389	144.8650000	0.001068	10.68	33.02	33.02	Pass
	2 Minutes	13.5605696	275.5280000	0.002032	20.32			
	5 Minutes	13.5606512	357.1330000	0.002634	26.34			
	10 Minutes	13.5607419	447.7910000	0.003302	33.02			
T=70°C	on StartUp	13.5603670	72.8990000	0.000538	5.38	22.72		
	2 Minutes	13.5604593	165.2080000	0.001218	12.18			
	5 Minutes	13.5605291	235.0120000	0.001733	17.33			
	10 Minutes	13.5606022	308.0870000	0.002272	22.72			
T=60°C	on StartUp	13.5603231	29.0410000	0.000214	2.14	14.15		
	2 Minutes	13.5603954	101.3680000	0.000748	7.48			
	5 Minutes	13.5604437	149.6370000	0.001103	11.04			
	10 Minutes	13.5604860	191.9130000	0.001415	14.15			
T=50°C	on StartUp	13.5602787	-15.3670000	-0.000113	-1.13	7.25		
	2 Minutes	13.5603223	28.2790000	0.000209	2.09			
	5 Minutes	13.5603564	62.3680000	0.000460	4.60			
	10 Minutes	13.5603924	98.3310000	0.000725	7.25			
T=40°C	on StartUp	13.5602956	1.5580000	0.000011	0.11	2.92		
	2 Minutes	13.5603093	15.2020000	0.000112	1.12			
	5 Minutes	13.5603179	23.8370000	0.000176	1.76			
	10 Minutes	13.5603337	39.6530000	0.000292	2.92			
T=30°C	on StartUp	13.5602708	-23.3130000	-0.000172	-1.72	1.72		
	2 Minutes	13.5603072	13.1630000	0.000097	0.97			
	5 Minutes	13.5603086	14.5760000	0.000107	1.07			
	10 Minutes	13.5603094	15.3640000	0.000113	1.13			
T=10°C	on StartUp	13.5602517	-42.3930000	-0.000313	-3.13	3.13		
	2 Minutes	13.5602826	-11.4200000	-0.000084	-0.84			
	5 Minutes	13.5602913	-2.8010000	-0.000021	-0.21			
	10 Minutes	13.5602944	0.3530000	0.000003	0.03			
T=0°C	StartUp	13.5602367	-57.3320000	-0.000423	-4.23	4.23		
	2 Minutes	13.5602715	-22.5350000	-0.000166	-1.66			
	5 Minutes	13.5602902	-3.9190000	-0.000029	-0.29			
	10 Minutes	13.5602951	1.0680000	0.000008	0.08			
T=-10°C	StartUp	13.5601991	-94.9390000	-0.000700	-7.00	7.00		
	2 Minutes	13.5602483	-45.8170000	-0.000338	-3.38			
	5 Minutes	13.5602801	-13.9390000	-0.000103	-1.03			
	10 Minutes	13.5602973	3.1990000	0.000024	0.24			
T=-20°C	StartUp	13.5601123	-181.7860000	-0.001341	-13.41	13.41		
	2 Minutes	13.5602052	-88.8570000	-0.000655	-6.55			
	5 Minutes	13.5602483	-45.7960000	-0.000338	-3.38			
	10 Minutes	13.5602728	-21.2510000	-0.000157	-1.57			
T=-30°C	StartUp	13.5600284	-265.6340000	-0.001959	-19.59	19.59		
	2 Minutes	13.5601908	-103.2870000	-0.000762	-7.62			
	5 Minutes	13.5602089	-85.1980000	-0.000628	-6.28			
	10 Minutes	13.5602424	-51.6480000	-0.000381	-3.81			
T=-40°C	StartUp	13.5599914	-302.6920000	-0.002232	-22.32	22.32		
	2 Minutes	13.5600837	-210.3970000	-0.001552	-15.52			
	5 Minutes	13.5601358	-158.3020000	-0.001167	-11.67			
	10 Minutes	13.5601823	-111.8080000	-0.000825	-8.25			

Remark: for more information and graphical plot see annex A1**CETECOM_TR20-1-0063601T08a_C01_A1**

4.6 Results from external laboratory

None	-

4.7 Opinions and interpretations

None	-

4.8 List of abbreviations

None	-

5 Equipment lists

ID	Description	Manufacturer	SerNo	CheckType	Last Check	Interval	Next Check
	120901 - SAC - Radiated Emission <1GHz			**calchk**	**cal: 07-21-2015 chk: 05-19-2020**	**cal: 10Y chk: 12M**	**cal: July 2025 chk: May 2021**
20574	Biconilog Hybrid Antenna BTA-L	Frankonia GmbH	980026L	cal	cal: 05-03-2019	cal: 36M	cal: May 2022
20487	CETECOM Semi Anechoic Chamber < 1GHz	ETS-Lindgren Gmbh	-	calchk	cal: 07-15-2015 chk: 05-19-2020	cal: 10Y chk: 12M	cal: July 2025 chk: May 2021
20341	Digital Multimeter Fluke 112	Fluke Deutschland GmbH	81650455	cal	cal: 05-25-2020	cal: 24M	cal: May 2022
20620	EMI Test Receiver ESU26	Rohde & Schwarz Messgerätebau GmbH	100362	cal	cal: 05-21-2021	cal: 12M	cal: May 2022
20482	filter matrix Filter matrix SAR 1	CETECOM GmbH	-	cnn			
25038	Loop Antenna HFH2-Z2	Rohde & Schwarz Messgerätebau GmbH	879824/13	cal	cal: 04-07-2020	cal: 24M	cal: April 2022
20885	Power Supply EA3632A	Agilent Technologies Deutschland GmbH	75305850	cnn			
	120902 - SAC - Radiated Emission >1GHz			**calchk**	**cal: 07-15-2017 chk: 10-02-2019**	**cal: 10Y chk: 24M**	**cal: July 2027 chk: October 2021**
20550	CETECOM Semi anechoic Chamber > 1Ghz	ETS-Lindgren Gmbh	-	calchk	cal: 07-15-2015 chk: 10-02-2019	cal: 10Y chk: 24M	cal: July 2025 chk: October 2021
20376	Horn Antenna BBHA9120 E	Schwarzbeck Mess-Elektronik OHG	BBHA 9120 E 179	cal	cal: 04-08-2020	cal: 36M	cal: April 2023
	120911 - Radio Laboratory 2			**cnn**			
20869	Climatic Chamber VT4002	Vötsch Industrietechnik GmbH, a schunk company	521/79152	chk	chk: 10-07-2020	chk: 12M	chk: October 2021
20468	Digital Multimeter Fluke 112	Fluke Deutschland GmbH	90090455	cal	cal: 06-01-2021	cal: 36M	cal: June 2024
20431	Near-Field Probe Set Model 7405	EMCO Elektronik GmbH	9305-2457	cpu			
20457	Power Supply EA-3013 S	EA Elektro-Automatik GmbH & Co. KG	9624680	cpu			
20690	Spectrum Analyzer FSU	Rohde & Schwarz Messgerätebau GmbH	100302/026	cal	cal: 05-20-2021	cal: 24M	cal: May 2023
20866	Signal Analyzer FSV3030	Rohde & Schwarz Messgerätebau GmbH	101247	cal	cal: 09-24-2021	cal: 12M	cal: September 2022

5.1 Legend

Note / remarks	Interval of calibration & Verification
12M	12 months
24M	24 months
36M	36 months
10Y	10 Years

Abbreviation Check Type	Description
cnn	Calibration and verification not necessary
cal	Calibration
calchk	Calibration plus intermediate Verification
chk	Verification
cpu	Verification before usage

6 Measurement Uncertainty valid for conducted/radiated measurements

The reported uncertainties are calculated based on the standard uncertainty multiplied with the appropriate coverage factor **k**, such that a confidence level of approximately 95% is achieved. For uncertainty determination, each component used in the concrete measurement set-up was taken in account and it contribution to the overall uncertainty according its statistical distribution calculated.

RF-Measurement	Reference	Frequency range	Calculated uncertainty based on a confidence level of 95%						Remarks
Conducted emissions (U_{CISPR})	-	9 kHz - 150 kHz 150 kHz - 30 MHz	4.0 dB 3.6 dB						-
Power Output radiated	-	30 MHz - 4 GHz	3.17 dB						Substitution method
Power Output conducted	-	Set-up No.	Cel-C1	Cel-C2	BT1	W1	W2	--	
		9 kHz - 12.75 GHz	N/A	0.60	0.7	0.25	N/A	--	-
		12.75 GHz - 26.5 GHz	N/A	0.82	--	N/A	N/A	--	
Conducted emissions on RF-port	-	9 kHz - 2.8 GHz	0.70	N/A	0.70	N/A	0.69	--	N/A - not applicable
		2.8 GHz - 12.75 GHz	1.48	N/A	1.51	N/A	1.43	--	
		12.75 GHz – 18 GHz	1.81	N/A	1.83	N/A	1.77	--	
		18 GHz - 26.5 GHz	1.83	N/A	1.85	N/A	1.79	--	
Occupied bandwidth	-	9 kHz - 4 GHz	0.1272 ppm (Delta Marker)						Frequency error
			1.0 dB						Power
Emission bandwidth	-	9 kHz - 4 GHz	0.1272 ppm (Delta Marker)						Frequency error
	-		See above: 0.70 dB						Power
Frequency stability	-	9 kHz - 20 GHz	0.0636 ppm						-
Radiated emissions Enclosure	-	150 kHz - 30 MHz	5.01dB						Magnetic field strength
		30 MHz - 1 GHz 1 GHz - 18 GHz 18-26.5 GHz	5.83 dB 4.91 dB 5.06 dB						Electrical Field strength

7 Versions of test reports (change history)

Version	Applied changes	Date of release
--	Initial release	2021-Nov-11
C01	Updated norm from ANSI C63.10-2020 to ANSI C63.10-2013 and updated table 1.3 and 1.4.	2022-Jan-19
--	--	--

End Of Test Report