LigoWave

NFT 3ac

installation

Package contents

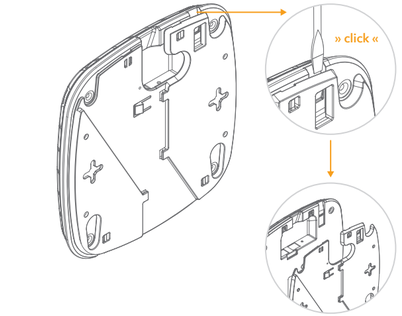

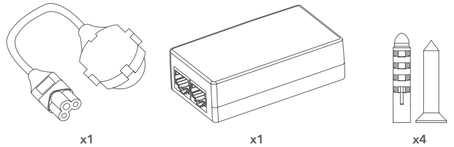

Mounting

Option 1

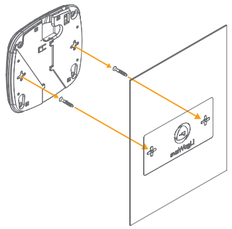

Option 2

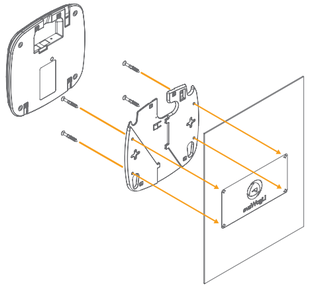

Mounting

Ceiling

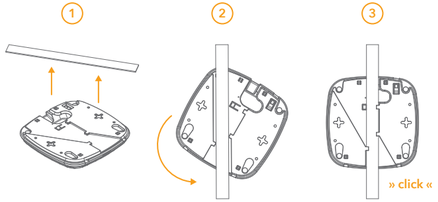

Overview

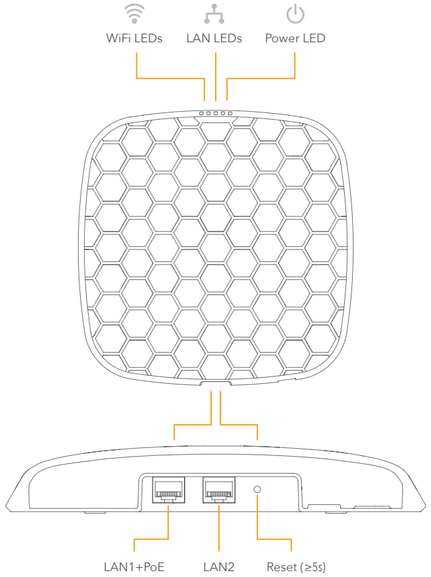

Default login settings

IP address:	Login:
DHCP client (fallback IP 192.168.2.66)	Login: **admin** Pass: **admin01**

Technical information

Antenna type	Integrated antenna
Max. antenna gain (dBi)	3
Input voltage	48V 802.3af/at or passive PoE (37-56V)

Important information

Copyright

© 2016 LigoWave
This guide and the software described in it are copyrighted with all rights reserved. No part of this publication may be reproduced, transmitted, transcribed, stored in a retrieval system, or translated into any language in any form by any means without the written permission of LigoWave.

Notice

Product size and shape are subject to change without prior notice, and actual product appearance may differ from that depicted in the user guide.
While the information in this guide has been compiled with great care, it may not be deemed an assurance of product characteristics. LigoWave shall be liable only to the degree specified in the terms of sale and delivery. The reproduction and distribution of the documentation and software supplied with this product and the use of its contents is subject to written authorization from LigoWave.

Trademarks

LigoWave logo is trademark of LigoWave. All other registered and unregistered trademarks in this document are the sole property of their respective owners.

FCC information

Français [French]

Note : Cet appareil est conforme à la Partie 15 des règlements de la FCC et aux normes RSS de l'Industrie du Canada. Son fonctionnement est soumis aux deux conditions suivantes: (1) cet appareil ne doit pas causer des interférences nuisibles, et (2) cet appareil doit accepter toute interférence reçue, y compris les interférences qui peuvent provoquer un fonctionnement indésirable.

Le fabricant n'est pas responsable des toutes interférences radio ou télévision causées par des modifications non autorisées apportées à cet appareil. De telles modifications peuvent empêcher l'utilisateur d'utiliser l'appareil.

English

This device complies with Part 15 of the FCC rules and Industry Canada license-exempt RSS standard(s). Operation is subject to the following two conditions: (1) this device may not cause harmful interference, and (2) this device must accept any interference received, including interference that may cause undesired operation.

The manufacturer is not responsible for any radio or TV interference caused by unauthorized modifications or change to this equipment. Such modifications or change could void the user's authority to operate the equipment.

This radio transmitter (identify the device by certification number or model number if Category II) has been approved by Industry Canada to operate with the antenna types listed below with the maximum permissible gain indicated. Antenna types not included in this list, having a gain greater than the maximum gain indicated for that type, are strictly prohibited for use with this device.

Français [French]

Le présent émetteur radio (identifier le dispositif par son numéro de certification ou son numéro de modèle s'il fait partie du matériel de catégorie II) a été approuvé par Industrie Canada pour fonctionner avec les types d'antenne énumérés ci-dessous et ayant un gain admissible maximal. Les types d'antenne non inclus dans cette liste, et dont le gain est supérieur au gain maximal indiqué, sont strictement interdits pour l'exploitation de l'émetteur.

English

This equipment has been tested and found to comply with the limits for a Class B digital device, pursuant to part 15 of the FCC Rules. These limits are designed to provide reasonable protection against harmful interference in a residential installation. This equipment generates, uses and can radiate radio frequency energy and, if not installed and used in accordance with the instructions, may cause harmful interference to radio communications. However, there is no guarantee that interference will not occur in a particular installation. If this equipment does cause harmful interference to radio or television reception, which can be determined by turning the equipment off and on, the user is encouraged to try to correct the interference by one or more of the following measures:

- Reorient or relocate the receiving antenna.
- Increase the separation between the equipment and receiver.
- Connect the equipment into an outlet on a circuit different from that to which the receiver is connected.
- Consult the dealer or an experienced radio/TV technician for help.

FCC radiation exposure statement

To maintain compliance with FCC's RF exposure guidelines, this equipment should be installed and operated with a minimum distance of 30cm between the radiator and your body.

Antenna installation

WARNING: It is installer's responsibility to ensure that when using the authorized an¬tennas in the United States (or where FCC rules apply), only those antennas certified with the product are used. The use of any antenna other than those certified with the product is expressly forbidden in accordance to FCC rules CFR47 part 15.204. The installer should configure the output power level of antennas, according to country regulations and per antenna type. Professional installation is required of equipment with connectors to ensure compliance with health and safety issues.

CE information

CE mark warning

This is a Class A product. In a domestic environment this product may cause radio interference in which case the user may be required to take adequate measures.

R&TTE compliance statement

This equipment complies with all the requirements of the Directive 1999/5/EC of the European Parliament and the Council of 9 March 1999 on Radio Equipment and Telecommunication Terminal Equipment and the Mutual Recognition of their Conformity (R&TTE).

The R&TTE Directive repeals and replaces in the directive 98/13/EEC (Telecommunications Terminal Equipment and Satellite Earth Station Equipment) As of April 8, 2000.

To avoid usage of unlicensed channels please choose the correct Country on the Web Management Disclaimer. Keep in mind that the responsibility for the proper usage of the device in accordance with the regulatory rules lies with an installer or an equipment owner.
Operations in the 5.15-5.25GHz band are restricted to indoor usage only.

Safety

This equipment is designed with the utmost care for the safety of those who install and use it. However, special attention must be paid to the dangers of electric shock and static electricity when working with electrical equipment. All guidelines of this manual and of the computer manufacturer must therefore be allowed at all times to ensure the safe use of the equipment.

According to European Directive 2002/96/EC requirement, equipment that contains this mark must not be disposed with unsorted municipal waste. It is a customer's responsibility to use local electric and electronic equipment waste collection point for this equipment disposal.

Declaration of Conformity

Česky [Czech] LigoWave tímto prohlašuje, že tento LigoWave NFT 3ac, je ve shodě se základními požadavky a dalšími příslušnými ustanoveními směrnice 1999/5/ES.

Dansk [Danish] Undertegnede LigoWave erklærer herved, at følgende udstyr LigoWave NFT 3ac, overholder de væsentlige krav og øvrige relevante krav i direktiv 1999/5/EF.

Nederlands [Dutch] Hierbij verklaart LigoWave dat het toestel NFT 3ac, in overeenstemming is met de essentiële eisen en de andere relevante bepalingen van richtlijn 1999/5/EG.
Bij deze verklaart LigoWave dat deze NFT 3ac, voldoet aan de essentiële eisen en aan de overige relevante bepalingen van Richtlijn 1999/5/EC.

English Hereby, LigoWave, declares that this NFT 3ac, is in compliance with the essential requirements and other relevant provisions of Directive 1999/5/EC.

Eesti [Estonian] Käesolevaga kinnitab LigoWave seadme NFT 3ac, vastavust direktiivi 1999/5/EÜ põhinõuetele ja nimetatud direktiivist tulenevatele teistele asjakohastele sätetele.

Suomi [Finnish] LigoWave vakuuttaa täten että NFT 3ac, tyyppinen laite on direktiivin 1999/5/EY oleellisten vaatimusten ja sitä koskevien direktiivin muiden ehtojen mukainen.

Français [French] Par la présente LigoWave déclare que l'appareil NFT 3ac, est conforme aux exigences essentielles et aux autres dispositions pertinentes de la directive 1999/5/CE.
Par la présente, LigoWave déclare que ce NFT 3ac, est conforme aux exigences essentielles et aux autres dispositions de la directive 1999/5/CE qui lui sont applicables.

Deutsch [German] Hiermit erklärt LigoWave, dass sich diese NFT 3ac, in Übereinstimmung mit den grundlegenden Anforderungen und den anderen relevanten Vorschriften der Richtlinie 1999/5/EG befindet. (BMWi)
Hiermit erklärt LigoWave die Übereinstimmung des Gerätes NFT 3ac, mit den grundlegenden Anforderungen und den anderen relevanten Festlegungen der Richtlinie 1999/5/EG. (Wien)

Ελληνική [Greek] ΜΕ ΤΗΝ ΠΑΡΟΥΣΑ LigoWave ΔΗΛΩΝΕΙ ΟΤΙ NFT 3ac, ΣΥΜΜΟΡΦΩΝΕΤΑΙ ΠΡΟΣ ΤΙΣ ΟΥΣΙΩΔΕΙΣ ΑΠΑΙΤΗΣΕΙΣ ΚΑΙ ΤΙΣ ΛΟΙΠΕΣ ΣΧΕΤΙΚΕΣ ΔΙΑΤΑΞΕΙΣ ΤΗΣ ΟΔΗΓΙΑΣ 1999/5/ΕΚ.

Magyar [Hungarian] Alulírott, LigoWave nyilatkozom, hogy a NFT 3ac, megfelel a vonatkozó alapvető követelményeknek és az 1999/5/EC irányelv egyéb előírásainak.

Íslenska [Icelandic] Hér með lýsir LigoWave yfr því að NFT 3ac, er í samræmi við grunnkröfur og aðrar kröfur, sem gerðar eru í tilskipun 1999/5/EC.

Italiano [Italian] Con la presente LigoWave dichiara che questo NFT 3ac, è conforme ai requisiti essenziali ed alle altre disposizioni pertinenti stabilite dalla direttiva 1999/5/CE.

Latviski [Latvian] Ar šo LigoWave deklarē, ka NFT 3ac, atbilst Direktīvas 1999/5/EK būtiskajām prasībām un citiem ar to saistītajiem noteikumiem.

Lietuvių [Lithuanian] LigoWave deklaruoja, kad šis NFT 3ac įrenginys, atitinka esminius reikalavimus ir kitas 1999/5/EB Direktyvos nuostatas.

Malti [Maltese] Hawnhekk, LigoWave, jiddikjara li dan NFT 3ac, jikkonforma mal-ħtiġijiet essenzjali u ma provvedimenti oħrajn relevanti li hemm fd-Dirrettiva 1999/5/EC.

Norsk [Norwegian] LigoWave erklærer herved at utstyret NFT 3ac, er i samsvar med de grunnleggende krav og øvrige relevante krav i direktiv 1999/5/EF.

Slovensky [Slovak] LigoWave týmto vyhlasuje, že NFT 3ac, spĺňa základné požiadavky a všetky príslušné ustanovenia Smernice 1999/5/ES.

Svenska [Swedish] Härmed intygar LigoWave att denna NFT 3ac, står I överensstämmelse med de väsentliga egenskapskrav och övriga relevanta bestämmelser som framgår av direktiv 1999/5/EG.

Español [Spanish] Por medio de la presente LigoWave declara que el NFT 3ac, cumple con los requisitos esenciales y cualesquiera otras disposiciones aplicables o exigibles de la Directiva 1999/5/CE.

Polski [Polish] Niniejszym, firma LigoWave oświadcza, że produkt serii NFT 3ac, spełnia zasadnicze wymagania i inne istotne postanowienia Dyrektywy 1999/5/EC.

Português [Portuguese] LigoWave declara que este NFT 3ac, está conforme com os requisitos essenciais e outras disposições da Directiva 1999/5/CE.

To get full CE declaration of conformity documents, refer at
http://www.ligowave.com/wiki/declarations-conformity/

EU countries this equipment may be operated in:

BE	BG	CZ	DK	DE	EE	IE
EL	ES	FR	HR	IT	CY	LV
LT	LU	HU	MT	NL	AT	PL
PT	RO	SI	SK	FI	SE	UK

LigoWave

Contact information

Technical support

If you encounter problems when installing or using this product, please consult the LigoWave website at www.LigoWave.com for:

- Direct contact to the LigoWave support centers.
- Frequently Asked Questions (FAQ).
- Download area for the latest software, user documentation and product updates.

EU office:
Šauletekio ave. 15 – 610
Vilnius, LT-10244,
Lithuania
support@wilibox.com

US office:
Ligowave
138 Mountain Brook Drive
Canton, GA 30115
United States of America
For support: support@ligowave.com
For sales enquiries: sales@ligowave.com