TEST REPORT

Dt&C

Dt&C Co., Ltd.
42, Yurim-ro, 154Beon-gil, Cheoin-gu, Yongin-si, Gyeonggi-do, Korea, 17042
Tel : 031-321-2664, Fax : 031-321-1664

1. Report No : DRTFCC2402-0010
2. Customer
   - Name (FCC) : Point Mobile Co., LTD.
   - Address (FCC) : B-9F Kabul Great Valley, 32, Digital-ro 9-gil, Geumcheon-gu, Seoul, South Korea, 08512
3. Use of Report : FCC Certification
4. Product Name / Model Name : Mobile Computer / PM84
   FCC ID : V2X-PM84
5. FCC Regulation(s): Part 2, 22, 24, 27
   Test Method Used : KDB971168 D01v03, ANSI/TIA-603-E-2016, ANSI C63.26-2015
6. Date of Test : 2023.12.20 ~ 2024.01.24
7. Location of Test : ☒ Permanent Testing Lab ☐ On Site Testing
8. Testing Environment : See appended test report.
9. Test Result : Refer to attached test result.

The results shown in this test report refer only to the sample(s) tested unless otherwise stated.
This test report is not related to KOLAS accreditation.

Affirmation	Tested by Name : SeokHo Han (Signature)	Technical Manager Name : JaeJin Lee (Signature)

2024 . 02 . 05 .

Dt&C Co., Ltd.

If this report is required to confirmation of authenticity, please contact to report@dtnc.net
This test report is prohibited to copy or reissue in whole or in part without the approval of Dt&C Co., Ltd.

Test Report Version

Test Report No.	Date	Description	Revised by	Reviewed by
DRTFCC2402-0010	Feb. 05, 2024	Initial issue	SeokHo Han	JaeJin Lee

This test report is prohibited to copy or reissue in whole or in part without the approval of Dt&C Co., Ltd.

Table of Contents

1. GENERAL INFORMATION 4
2. INTRODUCTION 5
2.1. EUT DESCRIPTION 5
2.2. TESTING ENVIRONMENT 5
2.3. MEASURING INSTRUMENT CALIBRATION 5
2.4. MEASUREMENT UNCERTAINTY 5
2.5. TEST FACILITY 5
3. DESCRIPTION OF TESTS 6
3.1. ERP & EIRP (Effective Radiated Power & Equivalent Isotropic Radiated Power) 6
3.2. PEAK TO AVERAGE RATIO 8
3.3. OCCUPIED BANDWIDTH (99 % Bandwidth) 10
3.4. SPURIOUS EMISSIONS AT ANTENNA TERMINAL 11
3.5. BAND EDGE EMISSIONS AT ANTENNA TERMINAL 12
3.6. RADIATED SPURIOUS EMISSIONS 13
3.7. FREQUENCY STABILITY / VARIATION OF AMBIENT TEMPERATURE 14
4. LIST OF TEST EQUIPMENT 15
5. SUMMARY OF TEST RESULTS 16
6. EMISSION DESIGNATOR AND SAMPLE CALCULATION 17
7. TEST DATA 18
7.1. PEAK TO AVERAGE RATIO 18
7.2. OCCUPIED BANDWIDTH (99 % Bandwidth) 18
7.3. SPURIOUS MISSIONS AT ANTENNA TERMINAL 18
7.4. BAND EDGE EMISSIONS AT ANTENNA TERMINAL 18
7.5. EFFECTIVE RADIATED POWER 19
7.6. EQUIVALENT ISOTROPIC RADIATED POWER 20
7.7. RADIATED SPURIOUS EMISSIONS 21
7.8. FREQUENCY STABILITY / VARIATION OF AMBIENT TEMPERATURE 23
7.8.1. FREQUENCY STABILITY (GSM850) 23
7.8.2. FREQUENCY STABILITY (WCDMA850) 24
7.8.3. FREQUENCY STABILITY (WCDMA1700) 25
7.8.4. FREQUENCY STABILITY (GSM1900) 26
7.8.5. FREQUENCY STABILITY (WCDMA1900) 27
8. TEST PLOTS 28
8.1. PEAK TO AVERAGE RATIO 28
8.2. OCCUPIED BANDWIDTH (99 % Bandwidth) 34
8.3. SPURIOUS EMISSIONS AT ANTENNA TERMINAL 41
8.4. BAND EDGE EMISSIONS AT ANTENNA TERMINAL 54

This test report is prohibited to copy or reissue in whole or in part without the approval of Dt&C Co., Ltd.

1. GENERAL INFORMATION

Equipment Class	PCS Licensed Transmitter held to ear(PCE)		
Product Name	Mobile Computer		
Model Name	PM84		
Add Model Name	-		
FVIN(Firmware Version Identification Number)	84.01		
EUT Serial Number	Conducted(23287A0055), Radiated(23287A0071)		
Power Supply	DC 3.87 V		
Antenna type	Antenna Type: PFC Antenna		
Antenna Gain(dBi)	Band 850	Band 1 700	Band 1 900
	-1.10	2.30	2.60

Mode	**Tx Frequency (MHz)**	**Emission Designator**	**ERP (Max. Power)**		**EIRP (Max. Power)**	
			dBm	**W**	**dBm**	**W**
GSM850	824.2 ~ 848.8	248KGXW	30.05	1.012	-	-
EDGE850	824.2 ~ 848.8	253KG7W	24.53	0.284	-	-
WCDMA850	826.4 ~ 846.6	4M17F9W	20.72	0.118	-	-
WCDMA1700	1 712.4 ~ 1 752.6	4M21F9W	-	-	27.69	0.587
GSM1900	1 850.2 ~ 1 909.8	248KGXW	-	-	32.67	1.849
EDGE1900	1 850.2 ~ 1 909.8	251KG7W	-	-	29.63	0.918
WCDMA1900	1 852.4 ~ 1 907.6	4M19F9W	-	-	27.82	0.605

This test report is prohibited to copy or reissue in whole or in part without the approval of Dt&C Co., Ltd.

2. INTRODUCTION

2.1. EUT DESCRIPTION

The Equipment Under Test (EUT) supports 850/1900 GSM, 850/1700/1900 WCDMA, Multi-band LTE, 802.11b/g/n/ac WLAN(2.4GHz), 802.11a/n/ac WLAN(5GHz), Bluetooth(BDR, EDR, LE) and NFC.

2.2. TESTING ENVIRONMENT

Ambient Condition	
▪ Temperature	+22 ℃ ~ +23 ℃
▪ Relative Humidity	40 % ~ 42 %

2.3. MEASURING INSTRUMENT CALIBRATION

The measuring equipment, which was utilized in performing the tests documented herein, has been calibrated in accordance with the manufacturer's recommendations for utilizing calibration equipment, which is traceable to recognized national standards.

2.4. MEASUREMENT UNCERTAINTY

The measurement uncertainties shown below were calculated in accordance with requirements of ANSI C63.4-2014. All measurement uncertainty values are shown with a coverage factor of *k* = 2 to indicate a 95 % level of confidence.

Parameter	Measurement uncertainty
Radiated Disturbance (Below 1 GHz)	4.8 dB (The confidence level is about 95 %, k = 2)
Radiated Disturbance (1 GHz ~ 18 GHz)	5.0 dB (The confidence level is about 95 %, k = 2)
Radiated Disturbance (Above 18 GHz)	5.2 dB (The confidence level is about 95 %, k = 2)

2.5. TEST FACILITY

Dt&C Co., Ltd.		
The 3 m test site and conducted measurement facility used to collect the radiated data are located at the 42, Yurim-ro, 154beon-gil, Cheoin-gu, Yongin-si, Gyeonggi-do, Korea 17042. The test site complies with the requirements of Part 2.948 according to ANSI C63.4-2014. **- FCC & IC MRA Designation No. : KR0034** **- ISED#: 5740A**		
www.dtnc.net		
Telephone	:	+ 82-31-321-2664
FAX	:	+ 82-31-321-1664

3. DESCRIPTION OF TESTS

3.1. ERP & EIRP (Effective Radiated Power & Equivalent Isotropic Radiated Power)

Test Set-up

Below 1GHz	Above 1GHz
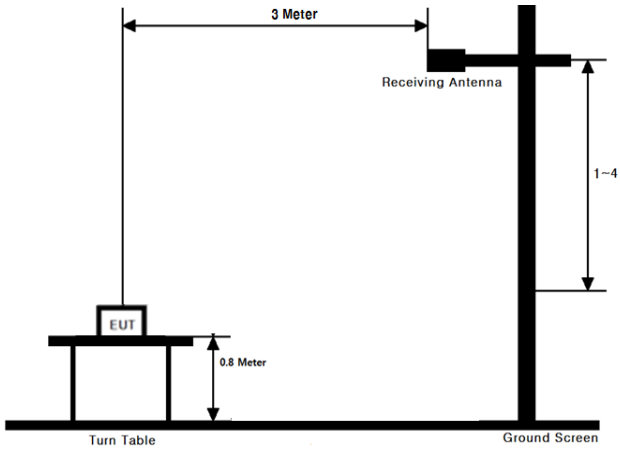	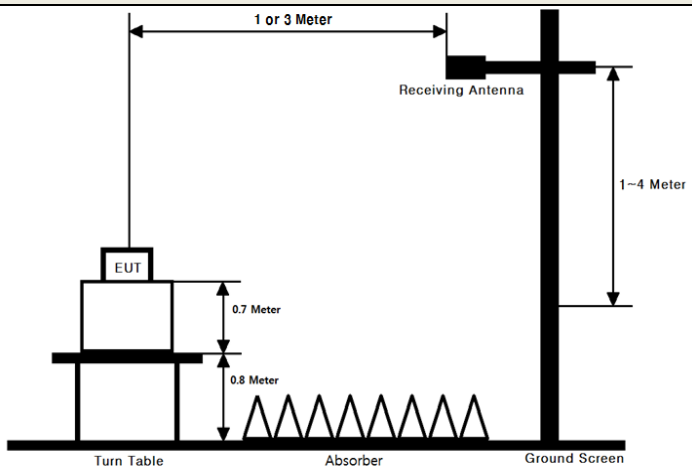

These measurements were performed at 3 m test site. The equipment under test is placed on a non-conductive table 0.8 or 1.5 meters above a turntable which is flush with the ground plane and 3 meters from the receive antenna. For measurements above 1 GHz absorbers are placed on the floor between the turn table and the antenna mast in such a way so as to maximize the reduction of reflections. For measurements below 1 GHz, the absorbers are removed.

Test Procedure

- **ANSI/TIA-603-E-2016 - Section 2.2.17**
- **KDB971168 D01v03 - Section 5.2.2**
- **ANSI 63.26-2015 – Section 5.2.4.4.1**

Test setting

1. Set span to 2 x to 3 x the OBW.
2. Set RBW = 1 % to 5 % of the OBW.
3. Set VBW ≥ 3 x RBW.
4. Set number of points in sweep ≥ 2 × span / RBW.
5. Sweep time:
   1) Set = auto-couple, or
   2) Set ≥ [10 × (number of points in sweep) × (transmission period)] for single sweep (automation-compatible) measurement. Transmission period is the on and off time of the transmitter.
6. Detector = power averaging (rms).
7. If the EUT can be configured to transmit continuously, then set the trigger to free run.
8. If the EUT cannot be configured to transmit continuously, then use a sweep trigger with the level set to enable triggering only on full power bursts and configure the EUT to transmit at full power for the entire duration of each sweep. Verify that the sweep time is less than or equal to the transmission burst duration. Time gating can also be used under similar constraints (i.e., configured such that measurement data is collected only during active full-power transmissions).
9. Trace average at least 100 traces in power averaging (rms) mode if sweep is set to auto-couple. To accurately determine the average power over multiple symbols, it can be necessary to increase the number of traces to be averaged above 100 or, if using a manually configured sweep time, increase the sweep time.

This test report is prohibited to copy or reissue in whole or in part without the approval of Dt&C Co., Ltd.

10. Compute the power by integrating the spectrum across the OBW of the signal using the instrument's band or channel power measurement function, with the band/channel limits set equal to the OBW band edges. If the instrument does not have a band or channel power function, then sum the spectrum levels (in linear power units) at intervals equal to the RBW extending across the entire OBW of the spectrum.

The receiver antenna height and turntable rotations were adjusted for the highest reading on the receive spectrum analyzer.

A half-wave dipole was substituted in place of the EUT. This dipole antenna was driven by a signal generator and the level of the signal generator was adjusted to obtain the same receive spectrum analyzer reading. The conducted power at the terminal of the substitute antenna is measured.

The ERP/EIRP is calculated using the following formula:

ERP/EIRP = The conducted power at the substitute antenna`s terminal [dBm] + Substitute Antenna gain [dBd for ERP, dBi for EIRP]

For readings above 1 GHz, the above procedure is repeated using horn antennas and the difference between the gain of the horn antenna and an isotropic antenna are taken into consideration.

This test report is prohibited to copy or reissue in whole or in part without the approval of Dt&C Co., Ltd.

3.2. PEAK TO AVERAGE RATIO

Test set-up

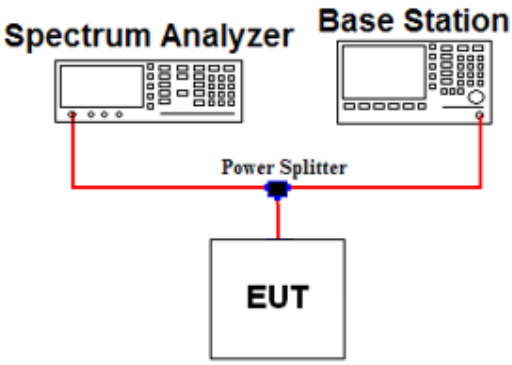

Test Procedure

- **KDB971168 D01v03 - Section 5.7.2**
- **ANSI C63.26-2015 – Section 5.2.3.4**

A peak to average ratio measurement is performed at the conducted port of the EUT.
The spectrum analyzers Complementary Cumulative Distribution Function (CCDF) measurement profile is used to determine the largest deviation between the average and the peak power of the EUT in a given bandwidth. The CCDF curve shows how much time the peak waveform spends at or above a given average power level. The present of time the signal spends at or above the level defines the probability for that particular power level.

Test setting

The spectrum Analyzer`s CCDF measurement function is enabled.

1. Set resolution/measurement bandwidth ≥ OBW or specified reference bandwidth.
2. Set the number of counts to a value that stabilizes the measured CCDF curve.
3. Set the measurement interval as follows:
   1) For continuous transmissions, set to the greater of [10 × (number of points in sweep) × (transmission symbol period)] or 1 ms.
   2) For burst transmissions, employ an external trigger that is synchronized with the EUT burst timing sequence, or use the internal burst trigger with a trigger level that allows the burst to stabilize. Set the measurement interval to a time that is less than or equal to the burst duration.
   3) If there are several carriers in a single antenna port, the peak power shall be determined for each individual carrier (by disabling the other carriers while measuring the required carrier) and the total peak power calculated from the sum of the individual carrier peak powers.
4. Record the maximum PAPR level associated with a probability of 0.1 %.
5. The peak power level is calculated form the sum of the PAPR value from step d) to the measured average power.

This test report is prohibited to copy or reissue in whole or in part without the approval of Dt&C Co., Ltd.

▣ Alternate Procedure

- **KDB971168 D01v03 - Section 5.7.3**
- **ANSI C63.26-2015 – Section 5.2.6**

Use one of the measurement procedures of the peak power and record as P_{Pk}.
Use one of the measurement procedures of the average power and record as P_{Avg}.
Both the peak and average power levels must be expressed in the same logarithmic units (e.g., dBm). Determine the PAPR from:

$$\textbf{PAPR (dB)} = P_{Pk}\ \textbf{(dBm or dBW)} - P_{Avg}\ \textbf{(dBm or dBW).}$$

Where,
PAPR peak-to-average power ratio, in dB
PPk measured peak power or peak PSD level, in dBm or dBW
PAvg measured average power or average PSD level, in dBm or dBW

- Peak Power Measurement

1. Set the RBW ≥ OBW
2. Set VBW ≥ 3 x RBW
3. Set span ≥ 2 x RBW
4. Sweep time ≥ 10 x (number of points in sweep) x (transmission symbol period).
5. Detector = peak
6. Trace mode = max hold
8. Allow trace to fully stabilize.
9. Use the peak marker function to determine the peak amplitude level.

- Average Power Measurement

1. Set span to 2 x to 3 x the OBW.
2. Set RBW = 1 % to 5 % of the OBW.
3. Set VBW ≥ 3 × RBW.
4. Set number of measurement points in sweep ≥ 2 × span / RBW..
5. Sweep time = 1) auto-couple, or
   2) set ≥ [10 x (number of points in sweep) x (transmission period)] for single sweep (automation-compatible (measurement. Transmission period is the on and off time of the transmitter.
6. Detector = power averaging (RMS).
7. If the EUT can be configured to transmit continuously, then set the trigger to free run.
8. If the EUT cannot be configured to transmit continuously, then use a sweep trigger with the level set to enable Triggering only on full power bursts and configure the EUT to transmit at full power for the entire duration of each Sweep. Verify that the sweep time is less than or equal to the transmission burst duration. Time gating can also be used under similar constraints (i.e., configured such that measurement data is collected only during active full-Power transmissions)
9. Trace average at least 100 traces in power averaging (rms) mode if sweep is set to auto-couple. To accurately determine the average power over multiple symbols, it can be necessary to increase the number of traces to be averaged above 100 or, if using a manually configured sweep time, increase the sweep time.
10. Compute the power by integrating the spectrum across the OBW of the signal using the instrument's band or channel power measurement function, with the band/channel limits set equal to the OBW band edges. If the instrument does not have a band or channel power function, then sum the spectrum levels (in linear power units) at intervals equal to the RBW extending across the entire OBW of the spectrum.

This test report is prohibited to copy or reissue in whole or in part without the approval of Dt&C Co., Ltd.

3.3. OCCUPIED BANDWIDTH (99 % Bandwidth)

Test set-up

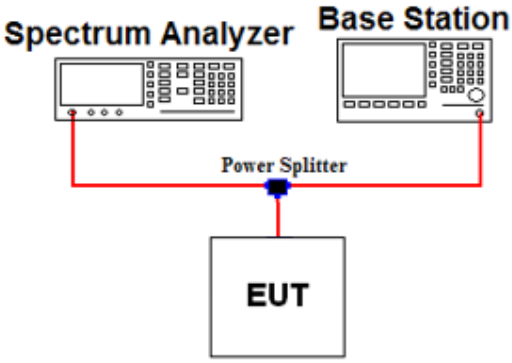

Offset value information

Frequency(MHz)	Offset Value(dB)	Frequency(MHz)	Offset Value(dB)
824.2	6.64	1 850.2	7.11
826.4	6.65	1 852.4	7.11
836.6	6.65	1 880.0	7.12
846.6	6.66	1 907.6	7.13
848.8	6.66	1 909.8	7.13
1 712.4	7.07	-	-
1 732.4	7.07	-	-
1 752.6	7.08	-	-

Note. 1: The offset values from EUT to Spectrum analyzer were measured and used for test.

Test Procedure

- **KDB971168 D01v03 - Section 4.3**
- **ANSI C63.26-2015 – Section 5.4.4**

The occupied bandwidth, that is the frequency bandwidth such that, below its lower and above its upper frequency limits, the mean powers radiated are each equal to 0.5 percent of the total mean power of a given emission.

Test setting

1. The signal analyzer`s automatic bandwidth measurement capability was used to perform the 99 % occupied bandwidth and the 26 dB bandwidth. The bandwidth measurement was not influenced by any intermediate power nulls in the fundamental emission.
2. RBW = 1 % ~ 5 % of the expected OBW & VBW ≥ 3 X RBW
3. Detector = Peak
4. Trance mode = Max hold
5. Sweep = Auto couple
6. The trace was allowed to stabilize
7. If necessary, step 2 ~ 6 were repeated after changing the RBW such that it would be within 1 % ~ 5 % of the 99 % occupied bandwidth observed in step 6.

This test report is prohibited to copy or reissue in whole or in part without the approval of Dt&C Co., Ltd.

3.4. SPURIOUS EMISSIONS AT ANTENNA TERMINAL

Test set-up

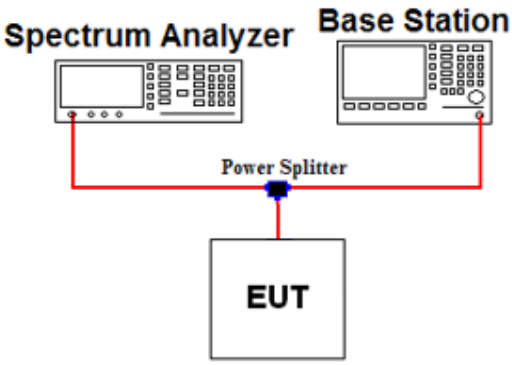

Offset value information

Frequency(MHz)	Offset Value(dB)	Frequency(MHz)	Offset Value(dB)
10 000	8.12	20 000	14.16
-	-	-	-

Note. 1: The offset value from EUT to Spectrum analyzer was measured and used for test.

Test Procedure

- **KDB971168 D01v03 - Section 6**
- **ANSI C63.26-2015 - Section 5.7**

The level of the carrier and the various conducted spurious and harmonic frequencies is measured by means of a calibrated spectrum analyzer. The EUT was setup to maximum output power at its low, middle, high channel with all bandwidths. The spectrum is scanned from 9 kHz up to a frequency including its 10th harmonic.

The power of any spurious emission shall be attenuated below the transmitter power (P) by at least 43 + 10 log(P) dB, where P is the transmitter power in Watts.

Test setting

1. RBW = 100 kHz(Below 1 GHz) or 1 MHz(Above 1 GHz) & VBW ≥ 3 X RBW (Refer to Note 1)
2. Detector = RMS & Trace mode = Max hold
3. Sweep time = Auto couple
4. Number of sweep point ≥ 2 X span / RBW
5. The trace was allowed to stabilize

Note 1: Compliance with these provisions is based on the use of measurement instrumentation employing a resolution bandwidth of 100 kHz or greater for Part 22 and 1 MHz or greater for Part 24, 27

This test report is prohibited to copy or reissue in whole or in part without the approval of Dt&C Co., Ltd.

3.5. BAND EDGE EMISSIONS AT ANTENNA TERMINAL

Test set-up

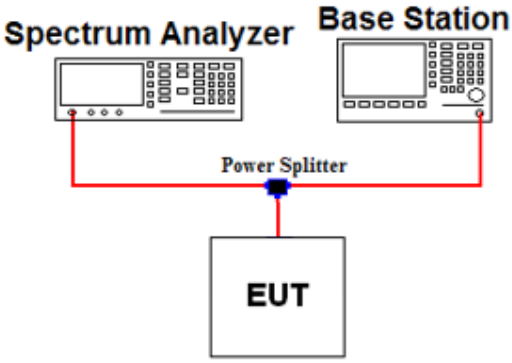

Offset value information

Frequency Range(MHz)	Offset Value (dB)	Frequency Range(MHz)	Offset Value (dB)	Frequency Range(MHz)	Offset Value (dB)
819 - 823	6.64	1 701 – 1 709	7.07	1 845 – 1 855	7.11
823 - 825	6.64	1 705 – 1 715	7.07	1 909 – 1 911	7.13
819 - 829	6.65	1 750 – 1 760	7.08	1 905 – 1 915	7.13
848 - 850	6.66	1 756 – 1 764	7.08	1 911 – 1 915	7.13
844 - 854	6.66	1 845 – 1 849	7.11	-	-
850 - 854	6.66	1 849 – 1 851	7.11	-	-

Note. 1: The offset value from EUT to Spectrum analyzer was measured and used for test.

Test Procedure

- **KDB971168 D01v03 - Section 6**
- **ANSI C63.26-2015 - Section 5.7**

All out of band emissions are measured by means of a calibrated spectrum analyzer. The EUT was setup to maximum output power at its lowest and highest channel with all modulations.

The power of any spurious emission shall be attenuated below the transmitter power (P) by at least 43 + 10 log(P) dB, where P is the transmitter power in Watts.

Test setting

1. Start and stop frequency were set such that the band edge would be placed in the center of the plot
2. Span was set large enough so as to capture all out of band emissions near the band edge
3. RBW ≥ 1 % of the emission
4. VBW ≥ 3 X RBW
5. Detector = RMS & Trace mode = Max hold
6. Sweep time = Auto couple or 1 s for band edge
7. Number of sweep point ≥ 2 X span / RBW
8. The trace was allowed to stabilize

Note 1: In the 1 MHz bands immediately outside and adjacent to the frequency block a resolution bandwidth of **at least one percent** of the emission bandwidth of the fundamental emission of the transmitter may be employed to demonstrate compliance with the out-of-band emissions limit.
The emission bandwidth is defined as the width of the signal between two points, one below the carrier center frequency and one above the carrier center frequency, outside of which all emission are attenuated at least 26 dB below the transmitter power.

This test report is prohibited to copy or reissue in whole or in part without the approval of Dt&C Co., Ltd.

3.6. RADIATED SPURIOUS EMISSIONS

Test Set-up

Below 1GHz	Above 1GHz
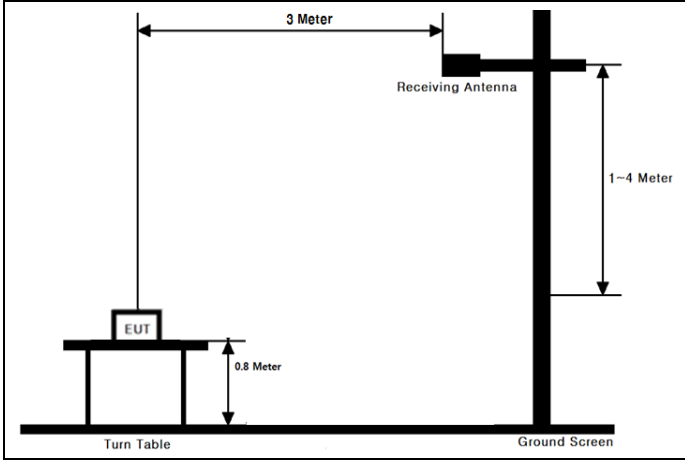	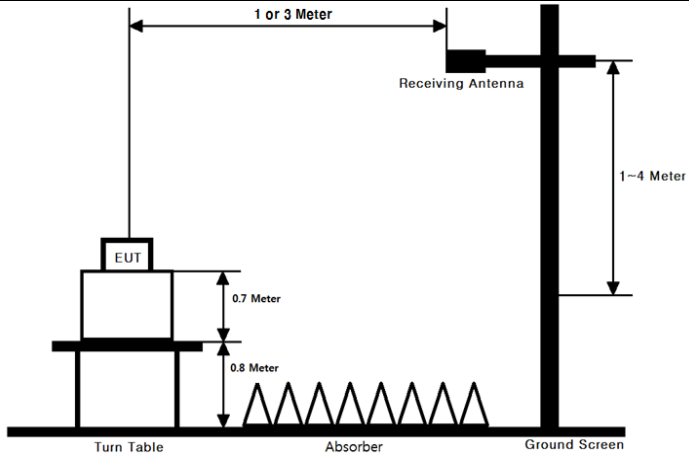

These measurements were performed at 3 m test site. The equipment under test is placed on a non-conductive table 0.8 or 1.5 meters above a turntable which is flush with the ground plane and 3 meters from the receive antenna. For measurements above 1 GHz absorbers are placed on the floor between the turn table and the antenna mast in such a way so as to maximize the reduction of reflections. For measurements below 1 GHz, the absorbers are removed.

Test Procedure

- **ANSI/TIA-603-E-2016 - Section 2.2.12**
- **KDB971168 D01v03 - Section 5.8**
- **ANSI C63.26-2015 - Section 5.5**

<u>Test setting</u>

1. RBW = 100 kHz for below 1 GHz and 1 MHz for above 1 GHz / VBW ≥ 3 X RBW
2. Detector = RMS & Trace mode = Max hold
3. Sweep time = Auto couple
4. Number of sweep point ≥ 2 X span / RBW
5. The trace was allowed to stabilize

The receive antenna height and turntable rotations were adjusted for the highest reading on the receive spectrum analyzer.
For radiated spurious emission measurements below 1 GHz, a half-wave dipole was substituted in place of the EUT. This dipole antenna was driven by a signal generator and the level of the signal generator was adjusted to obtain the same spectrum analyzer reading.
For radiated spurious emission measurements above 1 GHz, a Horn antenna was substituted in place of the EUT. This Horn antenna was driven by a signal generator and the level of the signal generator was adjusted to obtain the same spectrum analyzer reading. The difference between the gain of the horn and an isotropic antenna are taken into consideration.

This test report is prohibited to copy or reissue in whole or in part without the approval of Dt&C Co., Ltd.

3.7. FREQUENCY STABILITY / VARIATION OF AMBIENT TEMPERATURE

Test Set-up

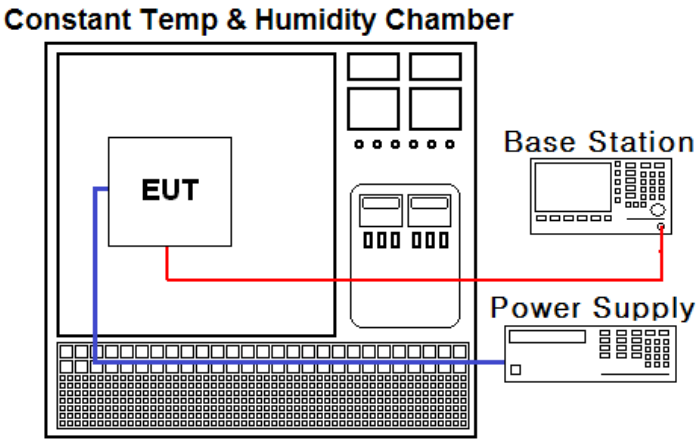

Test Procedure

- **ANSI/TIA-603-E-2016**
- **KDB971168 D01v03 - Section 9**

The frequency stability of the transmitter is measured by:

a.) **Temperature:**
The temperature is varied from - 30 °C to + 50 °C in 10 °C increments using an environmental chamber.

b.) **Primary Supply Voltage:**
The primary supply voltage is varied from 85 % to 115 % of the nominal value for non hand-carried battery and AC powered equipment. For hand-carried, battery-powered equipment, primary supply voltage is reduced to the battery operating end point which shall be specified by the manufacturer.

Specification:

The frequency stability shall be sufficient to ensure that the fundamental emission stays within the authorized frequency block for Part 24, 27. The frequency stability of the transmitter shall be maintained within ± 0.000 25 % (± 2.5 ppm) of the center frequency for Part 22.

Time Period and Procedure:

1. The carrier frequency of the transmitter is measured at room temperature.
(20 °C to provide a reference)

2. The equipment is turned on in a “standby” condition for one minute before applying power to the transmitter. Measurement of the carrier frequency of the transmitter is made within one minute after applying power to the transmitter.

3. Frequency measurements are made at 10 °C intervals ranging from -30 °C to +50 °C.
A period of at least one half-hour is provided to allow stabilization of the equipment at each temperature level.

This test report is prohibited to copy or reissue in whole or in part without the approval of Dt&C Co., Ltd.

4. LIST OF TEST EQUIPMENT

Type	Manufacturer	Model	Cal.Date (yy/mm/dd)	Next.Cal. Date (yy/mm/dd)	S/N
Spectrum Analyzer	Agilent Technologies	N9020A	23/12/15	24/12/15	MY50110097
Spectrum Analyzer	Agilent Technologies	N9020A	23/12/15	24/12/15	MY50410163
DC power supply	H.P	6633A	23/12/15	24/12/15	3524A06634
Multimeter	FLUKE	17B+	23/12/15	24/12/15	36390701WS
Power Splitter	Anritsu	K241B	23/12/15	24/12/15	1301183
Temp & Humi	ESPEC	SU-261	23/06/23	24/06/23	92006578
Radio Communication Analyzer	Agilent Technologies	E5515C	23/12/15	24/12/15	MY48360842
Radio Communication Analyzer	Anritsu	MT8820C	23/06/23	24/06/23	6200951873
Thermohygrometer	BODYCOM	BJ5478	23/12/15	24/12/15	120612-1
Thermohygrometer	BODYCOM	BJ5478	23/12/15	24/12/15	090205-4
Signal Generator	Rohde Schwarz	SMBV100A	23/12/15	24/12/15	255571
Signal Generator	ANRITSU	MG3695C	23/12/15	24/12/15	173501
Loop Antenna	ETS-Lindgren	6502	23/11/09	24/11/09	00060496
Bilog Antenna	Schwarzbeck	VULB 9160	23/12/15	24/12/15	3362
Dipole Antenna	Schwarzbeck	UHA 9105	22/12/16	24/12/16	2262
HORN ANT	ETS	3117	23/12/15	24/12/15	00140394
HORN ANT	A.H.Systems	SAS-574	23/06/23	24/06/23	155
PreAmplifier	H.P	8447D	23/12/15	24/12/15	2944A07774
PreAmplifier	Agilent	8449B	23/12/15	24/12/15	3008A02108
PreAmplifier	A.H.Systems Inc.	PAM-1840VH	23/06/23	24/06/23	163
High-pass filter	Wainwright	WHKX12-935-1000-15000-40SS	23/12/15	24/12/15	7
High-pass filter	Wainwright	WHKX10-2838-3300-18000-60SS	23/12/15	24/12/15	2
High-pass filter	Wainwright	WHKX6-6320-8000-26500-40CC	23/12/15	24/12/15	2
Cable	HUBER+SUHNER	SUCOFLEX100	24/01/03	25/01/03	M-1
Cable	HUBER+SUHNER	SUCOFLEX100	24/01/03	25/01/03	M-2
Cable	JUNKOSHA	MWX241/B	24/01/03	25/01/03	M-3
Cable	JUNKOSHA	MWX221	24/01/03	25/01/03	M-4
Cable	JUNKOSHA	MWX221	24/01/03	25/01/03	M-5
Cable	JUNFLON	J12J101757-00	24/01/03	25/01/03	M-7
Cable	HUBER+SUHNER	SUCOFLEX104	24/01/03	25/01/03	M-8
Cable	HUBER+SUHNER	SUCOFLEX106	24/01/03	25/01/03	M-9
Cable	JUNKOSHA	MWX315	24/01/03	25/01/03	M-10
Cable	JUNKOSHA	MWX241	24/01/03	25/01/03	mmW-1
Cable	JUNKOSHA	MWX241	24/01/03	25/01/03	mmW-4
Cable	DTNC	Cable	24/01/03	25/01/03	RFC-03

Note1: The measurement antennas were calibrated in accordance to the requirements of ANSI C63.5-2017.
Note2: The cable is not a regular calibration item, so it has been calibrated by Dt&C itself.

This test report is prohibited to copy or reissue in whole or in part without the approval of Dt&C Co., Ltd.

5. SUMMARY OF TEST RESULTS

FCC Part Section(s)	Parameter	Status Note 1
2.1046	Conducted Output Power	C Note2
22.913(a) 24.232(c) 27.50(d.4)	Effective Radiated Power Equivalent Isotropic Radiated Power	C Note3
2.1049	Occupied Bandwidth	C
2.1051 22.917(a) 24.238(a) 27.53(h)	Band Edge Emissions at Antenna Terminal Spurious Emissions at Antenna Terminal	C
24.232(d) 27.50(d.5)	Peak to Average Ratio	C
2.1053 22.917(a) 24.238(a) 27.53(h)	Radiated Spurious and Harmonic Emissions	C Note3
2.1055 22.355 24.235 27.54	Frequency Stability	C

Note 1: **C**=Comply **NC**=Not Comply **NT**=Not Tested **NA**=Not Applicable
Note 2: Refer to RF exposure report.
Note 3: This test item was performed in three orthogonal EUT positions and the worst case data was reported.

This test report is prohibited to copy or reissue in whole or in part without the approval of Dt&C Co., Ltd.

6. EMISSION DESIGNATOR AND SAMPLE CALCULATION

A. Emission Designator

GSM850 Emission Designator

Emission Designator = **248KGXW**

GSM OBW = 247.93 kHz

G = Phase Modulation

X = Cases not otherwise covered

W = Combination (Audio/Data)

EDGE850 Emission Designator

Emission Designator = **253KG7W**

EDGE OBW = 252.64 kHz

G = Phase Modulation

7 = Cases not otherwise covered

W = Combination (Audio/Data)

WCDMA850 Emission Designator

Emission Designator = **4M17F9W**

WCDMA OBW = 4.172 6MHz

F = Frequency Modulation

9 = Composite Digital Information

W = Combination (Audio/Data)

B. For substitution method

1) The EUT was placed on a turntable with 0.8 meter height for frequency below 1GHz and 1.5 meter height for frequency above 1 GHz respectively above ground.
2) The EUT was set 3 meters from the receiving antenna mounted on the antenna tower.
3) During the test, the turn table is rotated until the maximum signal is found.
4) Record the field strength meter's level. (ex. Spectrum reading level is -8.5 dBm)
5) Replace the EUT with dipole/Horn antenna that is connected to a calibrated signal generator.
6) Increase the signal generator output till the field strength meter's level is equal to the item (4). (ex. Signal generator level is -18.04 dBm)
7) The gain of the cable and amplifier between the signal generator and terminals of substituted antenna is 46.92 dB at test frequency.
8) Record the level at substituted antenna terminal. (ex. 28.88dBm)
9) The result is calculated as below;

EIRP(dBm) = LEVLE@ANTENNA TERMINAL + TX Antenna Gain (dBi)

ERP(dBm) = LEVLE@ANTENNA TERMINAL + TX Antenna Gain (dBd)

Where, TX Antenna Gain (dBd) = TX Antenna Gain (dBi) - 2.15 dB

This test report is prohibited to copy or reissue in whole or in part without the approval of Dt&C Co., Ltd.

7. TEST DATA

7.1. PEAK TO AVERAGE RATIO

- Plots of the EUT's Peak- to- Average Ratio are shown in Clause 8.1

7.2. OCCUPIED BANDWIDTH (99 % Bandwidth)

Mode	Channel	Frequency (MHz)	Test Result (kHz)
GSM850	128	824.20	**247.93**
	190	836.60	245.45
	251	848.80	246.45
EDGE850	128	824.20	249.57
	190	836.60	**252.64**
	251	848.80	242.44
WCDMA850	4132	826.40	4 170.90
	4183	836.60	4 170.30
	4233	846.60	**4 172.60**
WCDMA1700	1312	1 712.40	4 190.00
	1412	1 732.40	**4 210.70**
	1513	1 752.60	4 192.30
GSM1900	512	1 850.20	247.45
	661	1 880.00	**248.41**
	810	1 909.80	246.61
EDGE1900	512	1 850.20	**250.58**
	661	1 880.00	249.27
	810	1 909.80	244.05
WCDMA1900	9262	1 852.40	4 178.60
	9400	1 880.00	4 183.20
	9538	1 907.60	**4 185.60**

7.3. SPURIOUS MISSIONS AT ANTENNA TERMINAL

- Plots of the EUT's Conducted Spurious Emissions are shown in Clause 8.3

7.4. BAND EDGE EMISSIONS AT ANTENNA TERMINAL

- Plots of the EUT's Band Edge are shown in Clause 8.4

This test report is prohibited to copy or reissue in whole or in part without the approval of Dt&C Co., Ltd.

7.5. EFFECTIVE RADIATED POWER

- Test Notes

This EUT was tested under all configurations and the highest power is reported in GSM mode and WCDMA mode with HSDPA inactive at 12.2 kbps RMC and TPC bits set to “1” and in GSM mode using a Power Control Level of “0” in PCS Band and “5” in the Cellular Band. This EUT was tested with the fully charged battery.
The worst case data is reported.

- GSM850 data

Mode	Frequency (MHz)	Ant Pol(H/V)	Level at Antenna Terminal (dBm)	Substitute Antenna Gain(dBd)	ERP (dBm)	ERP (W)	Note.
GSM850	824.2	H	30.86	-1.43	29.43	0.877	-
GSM850	**836.6**	**H**	**31.49**	**-1.44**	**30.05**	**1.012**	**-**
GSM850	848.8	H	31.02	-1.46	29.56	0.904	-
EDGE850	**836.6**	**H**	**25.97**	**-1.44**	**24.53**	**0.284**	**-**

- WCDMA850 data

Mode	Frequency (MHz)	Ant Pol(H/V)	Level at Antenna Terminal (dBm)	Substitute Antenna Gain(dBd)	ERP (dBm)	ERP (W)	Note.
WCDMA850	826.4	H	21.11	-1.43	19.68	0.093	-
WCDMA850	**836.6**	**H**	**22.16**	**-1.44**	**20.72**	**0.118**	**-**
WCDMA850	846.6	H	21.03	-1.46	19.57	0.091	-

This test report is prohibited to copy or reissue in whole or in part without the approval of Dt&C Co., Ltd.

7.6. EQUIVALENT ISOTROPIC RADIATED POWER

- Test Notes

This EUT was tested under all configurations and the highest power is reported in GSM mode and WCDMA mode with HSDPA inactive at 12.2 kbps RMC and TPC bits set to “1” and in GSM mode using a Power Control Level of “0” in PCS Band and “5” in the Cellular Band. This EUT was tested with the fully charged battery.
The worst case data is reported.

- WCDMA1700 data

Mode	Frequency (MHz)	Ant Pol(H/V)	Level at Antenna Terminal (dBm)	Substitute Antenna Gain(dBi)	EIRP (dBm)	EIRP (W)	Note.
WCDMA1700	1 712.4	H	20.83	5.94	26.77	0.475	-
WCDMA1700	**1 732.4**	**H**	**21.96**	**5.73**	**27.69**	**0.587**	**-**
WCDMA1700	1 752.6	H	21.18	5.52	26.70	0.468	-

- GSM1900 data

Mode	Frequency (MHz)	Ant Pol(H/V)	Level at Antenna Terminal (dBm)	Substitute Antenna Gain(dBi)	EIRP (dBm)	EIRP (W)	Note.
GSM1900	1 850.2	H	26.80	4.34	31.14	1.300	-
GSM1900	1 880.0	H	27.44	4.26	31.70	1.479	-
GSM1900	**1 909.8**	**H**	**28.43**	**4.24**	**32.67**	**1.849**	**-**
EDGE1900	**1 909.8**	**H**	**25.39**	**4.24**	**29.63**	**0.918**	**-**

- WCDMA1900 data

Mode	Frequency (MHz)	Ant Pol(H/V)	Level at Antenna Terminal (dBm)	Substitute Antenna Gain(dBi)	EIRP (dBm)	EIRP (W)	Note.
WCDMA1900	1 852.4	H	23.37	4.33	27.70	0.589	-
WCDMA1900	**1 880.0**	**H**	**23.56**	**4.26**	**27.82**	**0.605**	**-**
WCDMA1900	1 907.6	H	23.54	4.23	27.77	0.598	-

This test report is prohibited to copy or reissue in whole or in part without the approval of Dt&C Co., Ltd.

7.7. RADIATED SPURIOUS EMISSIONS

- Test Notes

1. This EUT was tested under all configurations and the highest power is reported in GSM mode and WCDMA mode with HSDPA inactive at 12.2 kbps RMC and TPC bits set to “1” and in GSM mode using a Power Control Level of “0” in PCS Band and “5” in the Cellular Band. This EUT was tested with the fully charged battery.
   The worst case data is reported.
2. No other spurious and harmonic emissions were reported greater than listed emissions.
3. Limit = -13dBm

- GSM850 data

Tx Freq. (MHz)	Freq. (MHz)	Ant Pol (H/V)	Level at Antenna Terminal(dBm)	Substitute Antenna Gain(dBd)	Correct Generator Level(dBm)	Limit (dBm)	Margin (dB)	Note
824.2	1 648.22	V	-40.53	4.09	-36.44	-13.00	23.44	-
	2 472.45	V	-46.92	3.74	-43.18	-13.00	30.18	-
	3 296.66	V	-50.98	5.61	-45.37	-13.00	32.37	-
	4 121.18	H	-55.33	7.12	-48.21	-13.00	35.21	-
836.6	1 673.13	V	-45.21	4.01	-41.20	-13.00	28.20	-
	2 509.57	V	-46.84	3.64	-43.20	-13.00	30.20	-
	3 346.49	V	-50.18	5.82	-44.36	-13.00	31.36	-
	4 182.85	H	-53.58	7.19	-46.39	-13.00	33.39	-
848.8	1 697.54	V	-45.59	3.92	-41.67	-13.00	28.67	-
	2 546.26	V	-45.95	3.93	-42.02	-13.00	29.02	-
	3 394.94	V	-52.05	5.93	-46.12	-13.00	33.12	-
	4 243.84	H	-51.64	7.20	-44.44	-13.00	31.44	-

- WCDMA850 data

Tx Freq. (MHz)	Freq. (MHz)	Ant Pol (H/V)	Level at Antenna Terminal(dBm)	Substitute Antenna Gain(dBd)	Correct Generator Level(dBm)	Limit (dBm)	Margin (dB)	Note
826.4	1 650.87	H	-54.89	4.09	-50.80	-13.00	37.80	-
	2 475.95	H	-48.25	3.72	-44.53	-13.00	31.53	-
836.6	1 671.14	H	-52.43	4.01	-48.42	-13.00	35.42	-
	2 512.88	H	-47.95	3.66	-44.29	-13.00	31.29	-
846.6	1 691.12	H	-50.75	3.94	-46.81	-13.00	33.81	-
	2 537.07	H	-48.42	3.86	-44.56	-13.00	31.56	-

This test report is prohibited to copy or reissue in whole or in part without the approval of Dt&C Co., Ltd.

- WCDMA1700 data

Tx Freq. (MHz)	Freq. (MHz)	Ant Pol (H/V)	Level at Antenna Terminal(dBm)	Substitute Antenna Gain(dBi)	Correct Generator Level(dBm)	Limit (dBm)	Margin (dB)	Note
1 712.4	3 422.54	H	-56.74	8.17	-48.57	-13.00	35.57	-
1 732.4	3 466.38	H	-56.97	8.34	-48.63	-13.00	35.63	-
1 752.6	3 503.61	H	-55.82	8.48	-47.34	-13.00	34.34	-

- GSM1900 data

Tx Freq. (MHz)	Freq. (MHz)	Ant Pol (H/V)	Level at Antenna Terminal(dBm)	Substitute Antenna Gain(dBi)	Correct Generator Level(dBm)	Limit (dBm)	Margin (dB)	Note
1 850.2	3 700.49	V	-47.36	8.34	-39.02	-13.00	26.02	
	5 550.55	H	-48.17	10.30	-37.87	-13.00	24.87	
	7 400.85	V	-55.66	12.04	-43.62	-13.00	30.62	
1 880.0	3 759.97	V	-46.71	8.32	-38.39	-13.00	25.39	
	5 639.88	H	-45.57	10.44	-35.13	-13.00	22.13	
	7 519.89	V	-54.81	12.18	-42.63	-13.00	29.63	
1 909.8	3 819.63	V	-49.10	8.56	-40.54	-13.00	27.54	
	5 729.39	H	-43.13	10.57	-32.56	-13.00	19.56	
	7 639.20	V	-55.13	12.21	-42.92	-13.00	29.92	

- WCDMA1900 data

Tx Freq. (MHz)	Freq. (MHz)	Ant Pol (H/V)	Level at Antenna Terminal(dBm)	Substitute Antenna Gain(dBi)	Correct Generator Level(dBm)	Limit (dBm)	Margin (dB)	Note
1 852.4	3 703.20	H	-56.60	8.34	-48.26	-13.00	35.26	-
	5 554.26	H	-54.53	10.31	-44.22	-13.00	31.22	-
1 880.0	3 757.91	H	-55.96	8.31	-47.65	-13.00	34.65	-
	5 643.20	H	-53.24	10.44	-42.80	-13.00	29.80	-
1 907.6	3 817.02	H	-56.11	8.55	-47.56	-13.00	34.56	-
	5 719.86	H	-49.70	10.55	-39.15	-13.00	26.15	-

This test report is prohibited to copy or reissue in whole or in part without the approval of Dt&C Co., Ltd.

7.8. FREQUENCY STABILITY / VARIATION OF AMBIENT TEMPERATURE

- Test Notes.

Based on the results of the frequency stability test at the center channel the frequency deviation results measured are very small. As such it is determined that the channels at the band edge would remain in-band when the maximum measured frequency deviation noted during the frequency stability tests is applied. Therefore the device is determined to remain operating in band over the temperature and voltage range as tested.

7.8.1. FREQUENCY STABILITY (GSM850)

OPERATING FREQUENCY : 836.60 MHz
REFERENCE VOLTAGE : 3.87 V DC
LIMIT : 2.5 ppm

VOLTAGE (%)	POWER (V DC)	TEMP (℃)	FREQ (Hz)	Deviation	
				(%)	(ppm)
100 %	3.87	+20(Ref)	836,600,019	0.000 002 3	0.023
100 %		-30	836,600,030	0.000 003 6	0.036
100 %		-20	836,600,024	0.000 002 9	0.029
100 %		-10	836,600,027	0.000 003 2	0.032
100 %		0	836,600,013	0.000 001 6	0.016
100 %		+10	836,600,016	0.000 001 9	0.019
100 %		+20	836,600,019	0.000 002 3	0.023
100 %		+30	836,600,025	0.000 003 0	0.030
100 %		+40	836,600,031	0.000 003 7	0.037
100 %		+50	836,600,033	0.000 003 9	0.039
115 %	4.45	+20	836,600,022	0.000 002 6	0.026
BATT.ENDPOINT	3.55	+20	836,600,015	0.000 001 8	0.018

This test report is prohibited to copy or reissue in whole or in part without the approval of Dt&C Co., Ltd.

7.8.2. FREQUENCY STABILITY (WCDMA850)

OPERATING FREQUENCY : 836.60 MHz
REFERENCE VOLTAGE : 3.87 V DC
LIMIT : 2.5 ppm

VOLTAGE (%)	POWER (V DC)	TEMP (℃)	FREQ (Hz)	Deviation	
				(%)	(ppm)
100 %	3.87	+20(Ref)	836,599,988	-0.000 001 4	-0.014
100 %		-30	836,599,991	-0.000 001 1	-0.011
100 %		-20	836,599,986	-0.000 001 7	-0.017
100 %		-10	836,599,984	-0.000 001 9	-0.019
100 %		0	836,599,995	-0.000 000 6	-0.006
100 %		+10	836,599,996	-0.000 000 5	-0.005
100 %		+20	836,599,988	-0.000 001 4	-0.014
100 %		+30	836,599,994	-0.000 000 7	-0.007
100 %		+40	836,599,989	-0.000 001 3	-0.013
100 %		+50	836,599,988	-0.000 001 4	-0.014
115 %	4.45	+20	836,599,992	-0.000 001 0	-0.010
BATT.ENDPOINT	3.55	+20	836,599,990	-0.000 001 2	-0.012

This test report is prohibited to copy or reissue in whole or in part without the approval of Dt&C Co., Ltd.

7.8.3. FREQUENCY STABILITY (WCDMA1700)

OPERATING FREQUENCY : 1 732.40 MHz
REFERENCE VOLTAGE : 3.87 V DC
LIMIT : The frequency stability shall be sufficient to ensure that the fundamental emission stays within the authorized frequency block.

VOLTAGE (%)	POWER (V DC)	TEMP (℃)	FREQ (Hz)	Deviation	
				(%)	(ppm)
100 %	3.87	+20(Ref)	1,732,399,989	-0.000 000 6	-0.006
100 %		-30	1,732,399,996	-0.000 000 2	-0.002
100 %		-20	1,732,399,993	-0.000 000 4	-0.004
100 %		-10	1,732,399,990	-0.000 000 6	-0.006
100 %		0	1,732,399,986	-0.000 000 8	-0.008
100 %		+10	1,732,399,994	-0.000 000 3	-0.003
100 %		+20	1,732,399,989	-0.000 000 6	-0.006
100 %		+30	1,732,399,999	-0.000 000 1	-0.001
100 %		+40	1,732,399,991	-0.000 000 5	-0.005
100 %		+50	1,732,399,987	-0.000 000 8	-0.008
115 %	4.45	+20	1,732,399,988	-0.000 000 7	-0.007
BATT.ENDPOINT	3.55	+20	1,732,399,994	-0.000 000 3	-0.003

This test report is prohibited to copy or reissue in whole or in part without the approval of Dt&C Co., Ltd.

7.8.4. FREQUENCY STABILITY (GSM1900)

OPERATING FREQUENCY : 1880.00 MHz
REFERENCE VOLTAGE : 3.87 V DC
LIMIT : The frequency stability shall be sufficient to ensure that the fundamental emission stays within the authorized frequency block.

VOLTAGE (%)	POWER (V DC)	TEMP (℃)	FREQ (Hz)	Deviation	
				(%)	(ppm)
100 %	3.87	+20(Ref)	1,880,000,036	0.000 001 9	0.019
100 %		-30	1,880,000,018	0.000 001 0	0.010
100 %		-20	1,880,000,024	0.000 001 3	0.013
100 %		-10	1,880,000,032	0.000 001 7	0.017
100 %		0	1,880,000,040	0.000 002 1	0.021
100 %		+10	1,880,000,033	0.000 001 8	0.018
100 %		+20	1,880,000,036	0.000 001 9	0.019
100 %		+30	1,880,000,043	0.000 002 3	0.023
100 %		+40	1,880,000,048	0.000 002 6	0.026
100 %		+50	1,880,000,036	0.000 001 9	0.019
115 %	4.45	+20	1,880,000,026	0.000 001 4	0.014
BATT.ENDPOINT	3.55	+20	1,880,000,030	0.000 001 6	0.016

This test report is prohibited to copy or reissue in whole or in part without the approval of Dt&C Co., Ltd.

7.8.5. FREQUENCY STABILITY (WCDMA1900)

OPERATING FREQUENCY : 1880.00 MHz
REFERENCE VOLTAGE : 3.87 V DC
LIMIT : The frequency stability shall be sufficient to ensure that the fundamental emission stays within the authorized frequency block.

VOLTAGE (%)	POWER (V DC)	TEMP (℃)	FREQ (Hz)	Deviation	
				(%)	(ppm)
100 %	3.87	+20(Ref)	1,879,999,986	-0.000 000 7	-0.007
100 %		-30	1,879,999,995	-0.000 000 3	-0.003
100 %		-20	1,879,999,993	-0.000 000 4	-0.004
100 %		-10	1,879,999,989	-0.000 000 6	-0.006
100 %		0	1,879,999,992	-0.000 000 4	-0.004
100 %		+10	1,879,999,984	-0.000 000 9	-0.009
100 %		+20	1,879,999,986	-0.000 000 7	-0.007
100 %		+30	1,879,999,990	-0.000 000 5	-0.005
100 %		+40	1,879,999,998	-0.000 000 1	-0.001
100 %		+50	1,879,999,997	-0.000 000 2	-0.002
115 %	4.45	+20	1,879,999,991	-0.000 000 5	-0.005
BATT.ENDPOINT	3.55	+20	1,879,999,987	-0.000 000 7	-0.007

This test report is prohibited to copy or reissue in whole or in part without the approval of Dt&C Co., Ltd.

8. TEST PLOTS

8.1. PEAK TO AVERAGE RATIO

-P_{Pk} (dBm) GSM850 & Channel: 190

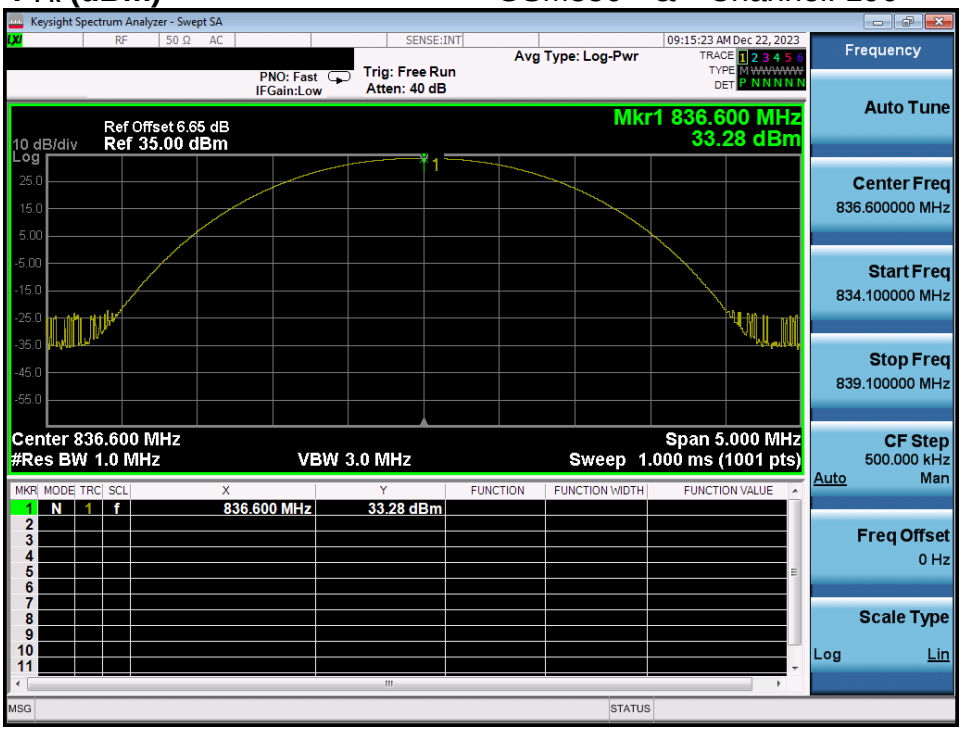

-P_{Avg} (dBm) GSM850 & Channel: 190

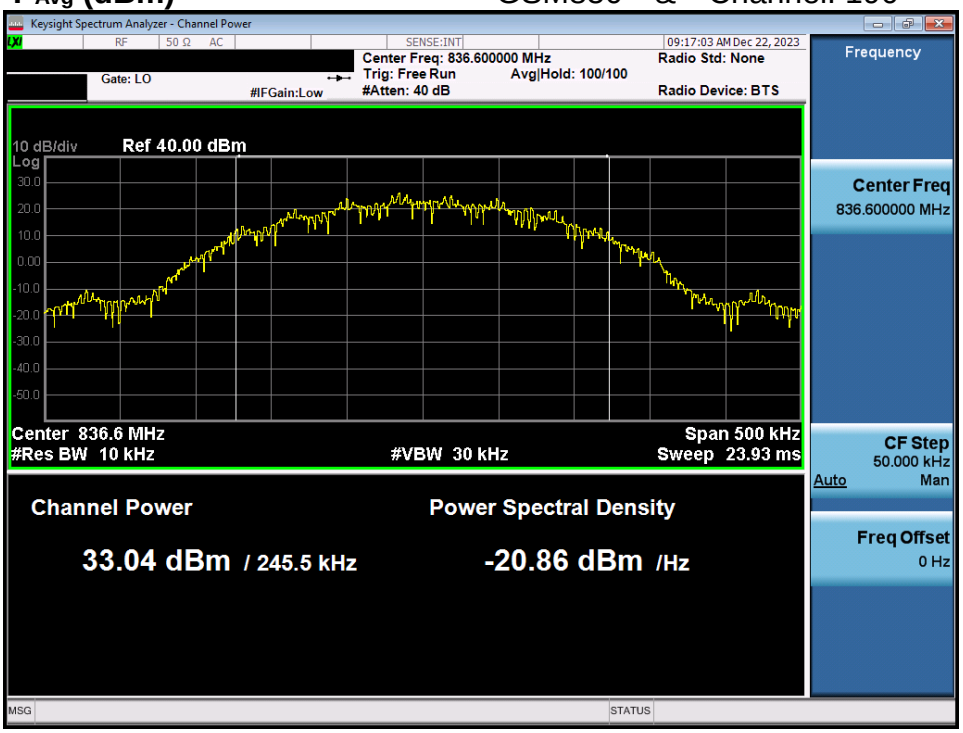

PAPR (dB) = P_{Pk} (dBm) - P_{Avg} (dBm) = 33.28 dBm – 33.04 dBm = 0.24 dB

-P_{Pk} (dBm) EDGE850 & Channel: 190

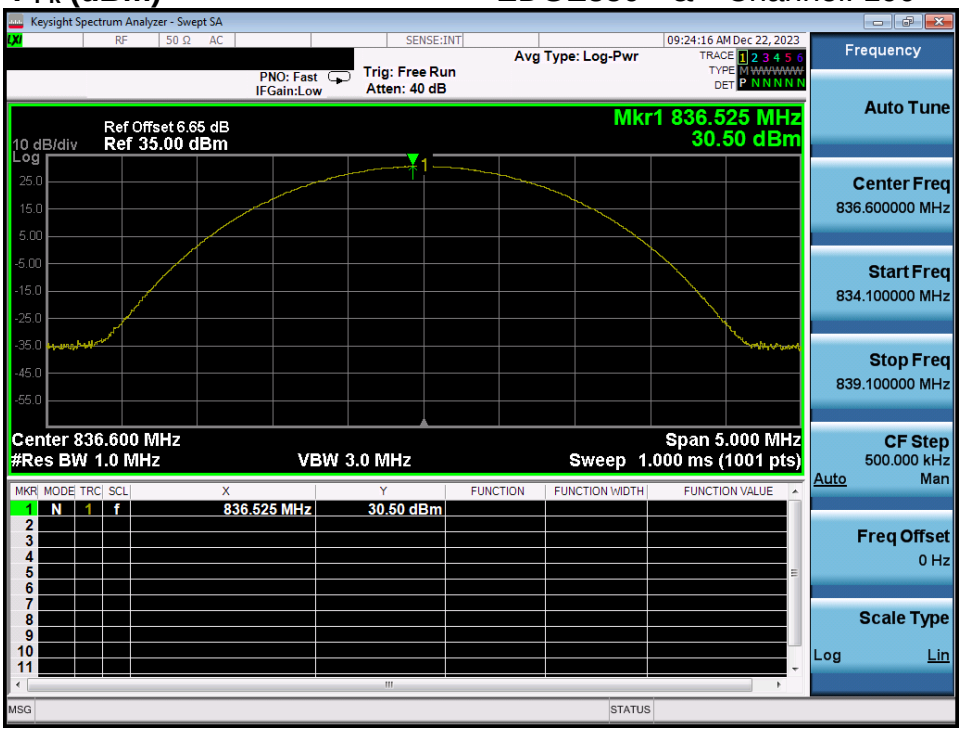

-P_{Avg} (dBm) EDGE850 & Channel: 190

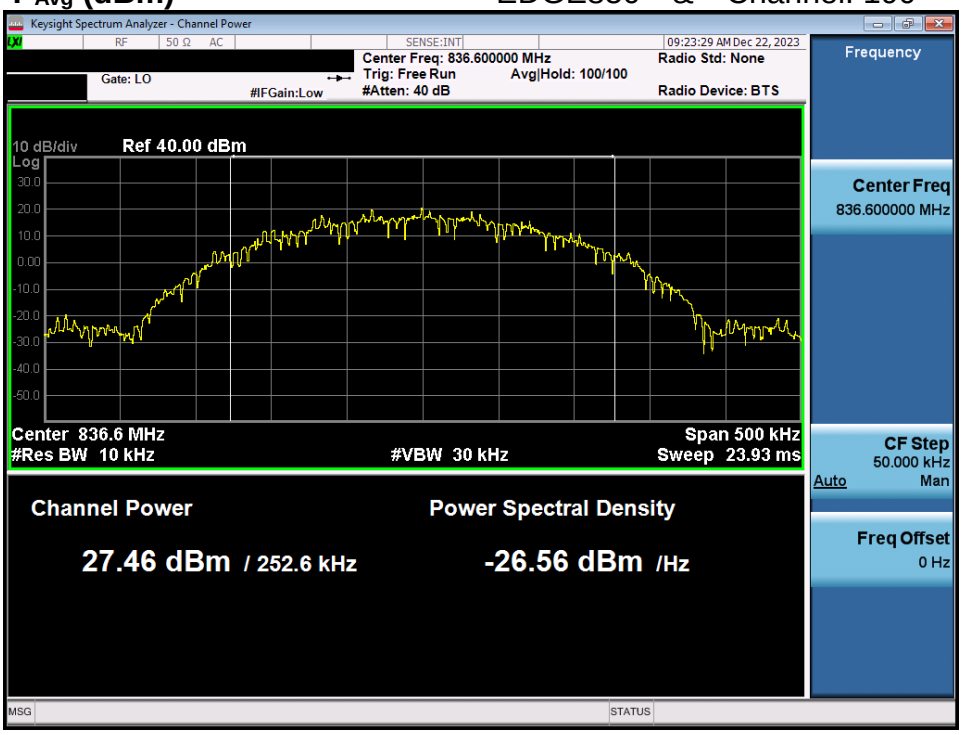

PAPR (dB) = P_{Pk} (dBm) - P_{Avg} (dBm) = 30.50 dBm – 27.46 dBm = 3.04 dB

WCDMA850 & Channel: 4 183

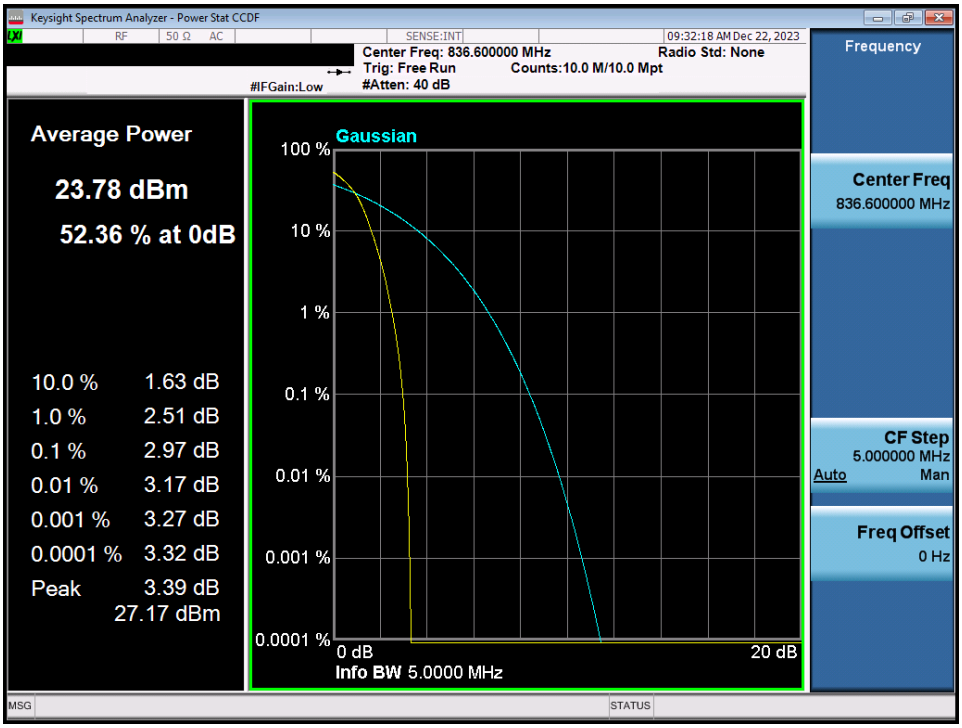

WCDMA1700 & Channel: 1 412

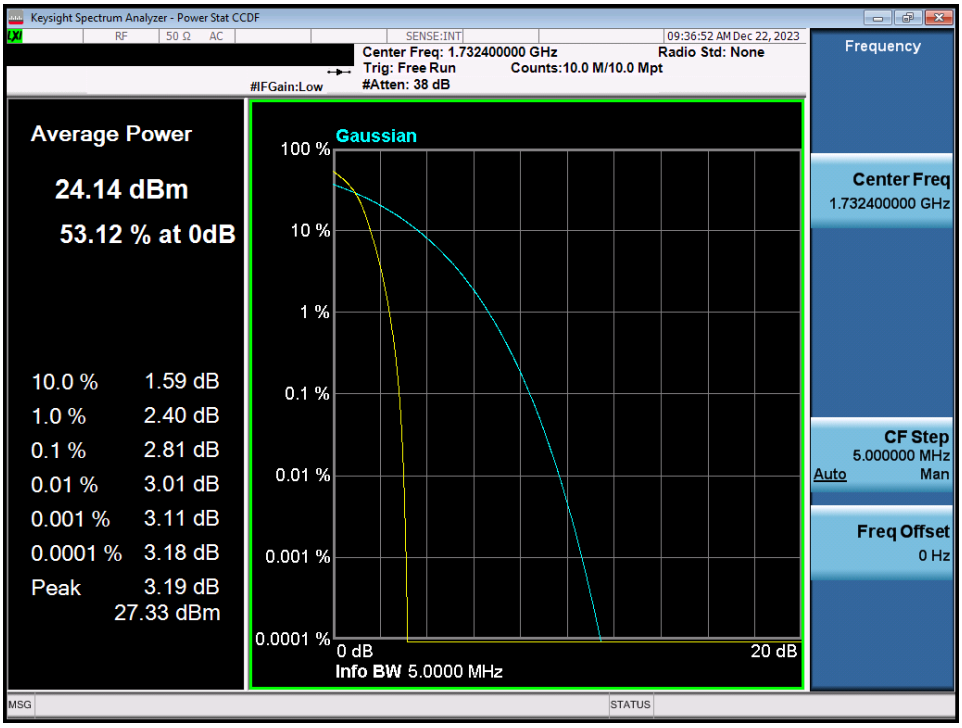

This test report is prohibited to copy or reissue in whole or in part without the approval of Dt&C Co., Ltd.

-P_{Pk} (dBm) GSM1900 & Channel: 661

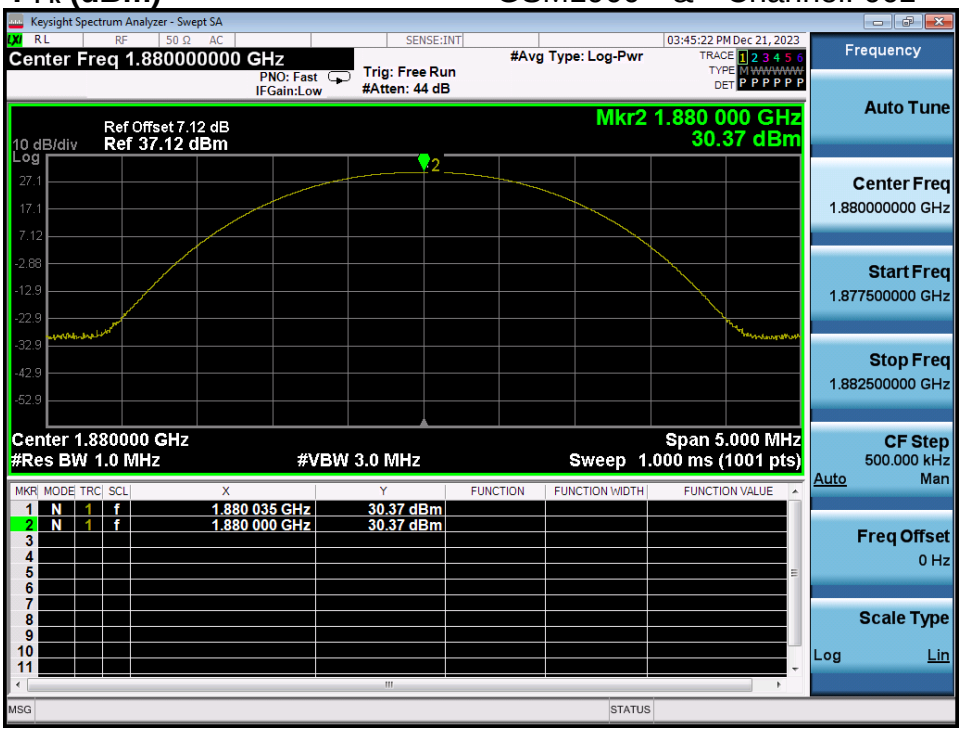

-P_{Avg} (dBm) GSM1900 & Channel: 661

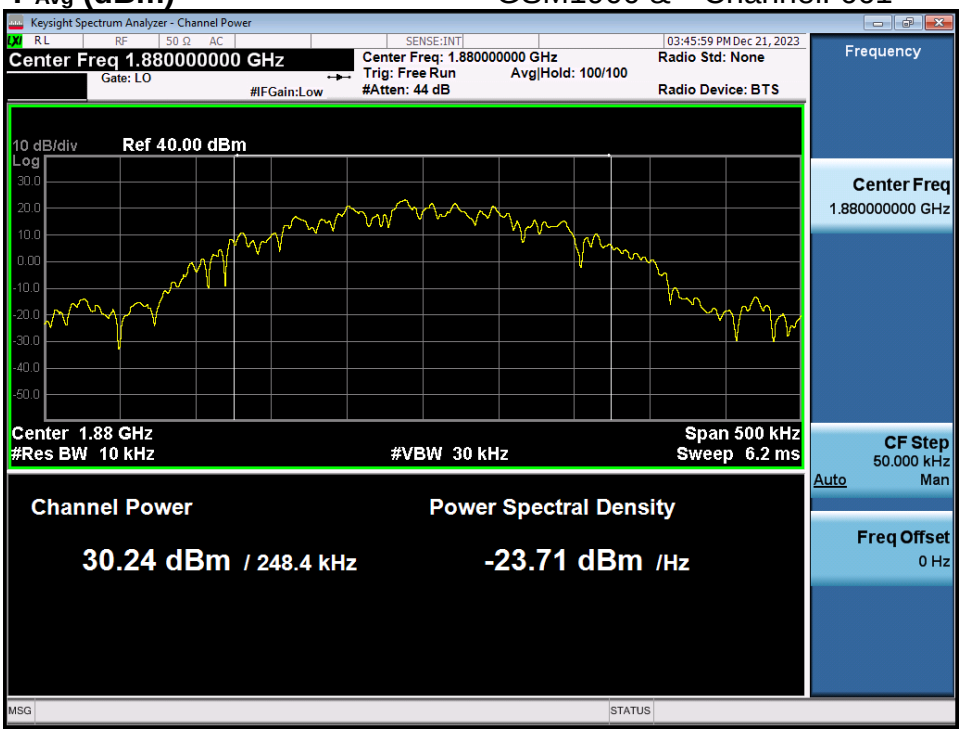

PAPR (dB) = P_{Pk} (dBm) - P_{Avg} (dBm) = 30.37 dBm – 30.24 dBm = 0.13 dB

-P_{Pk} (dBm) EDGE1900 & Channel: 661

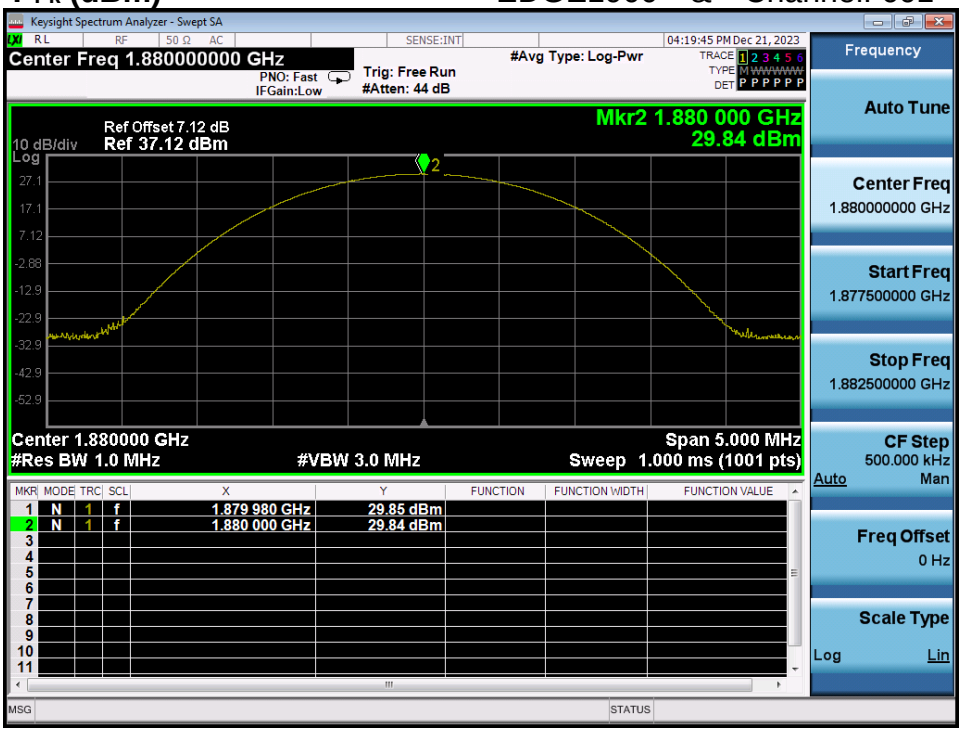

-P_{Avg} (dBm) EDGE1900 & Channel: 661

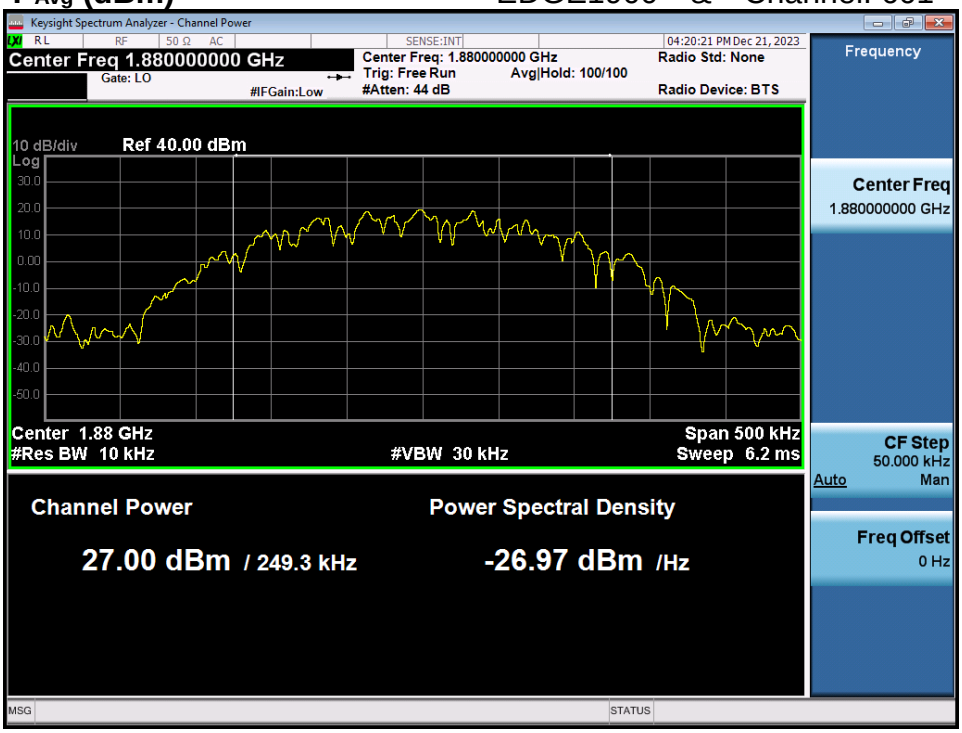

PAPR (dB) = P_{Pk} (dBm) - P_{Avg} (dBm) = 29.84 dBm – 27.00 dBm = 2.84 dB

WCDMA1900 & Channel: 9 400

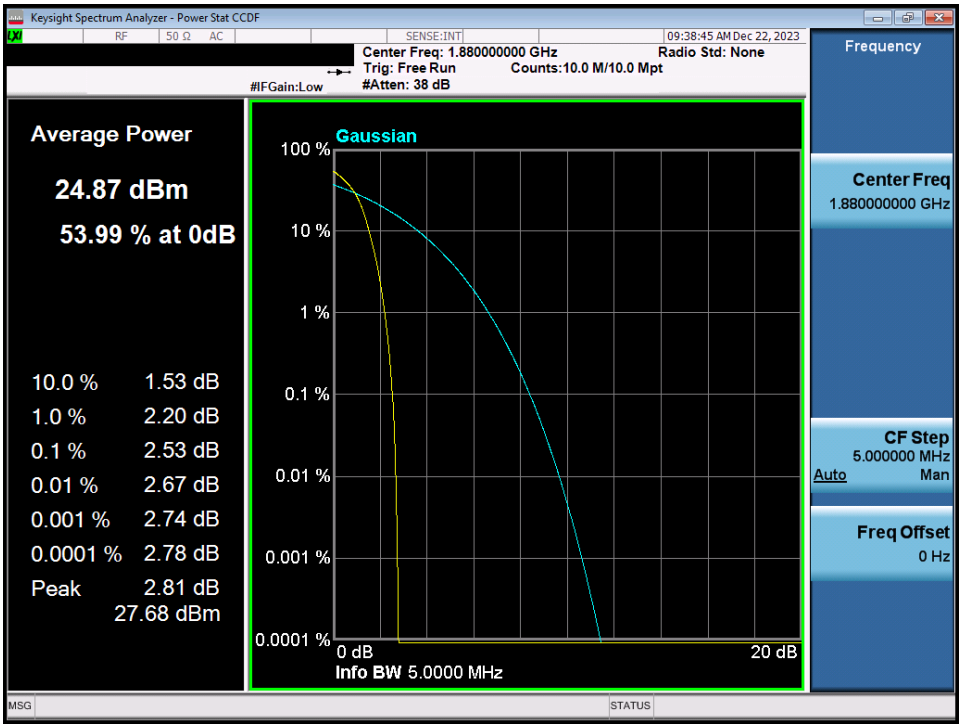

8.2. OCCUPIED BANDWIDTH (99 % Bandwidth)

GSM850 & Channel: 128

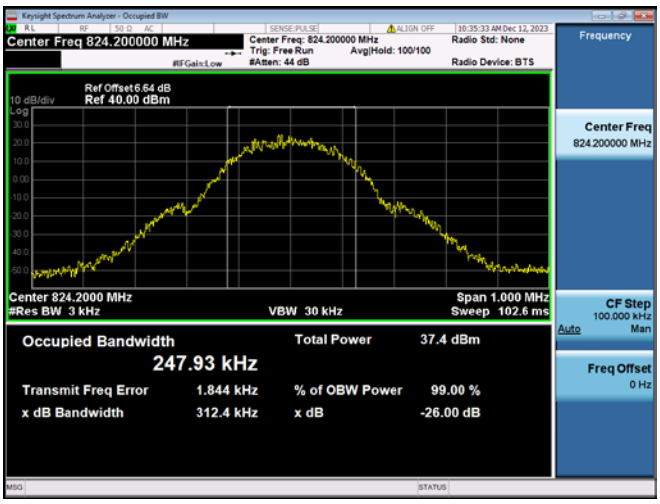

GSM850 & Channel: 190

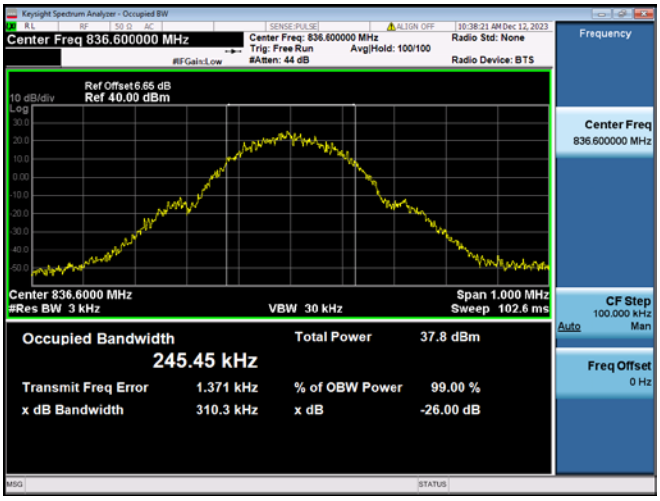

GSM850 & Channel: 251

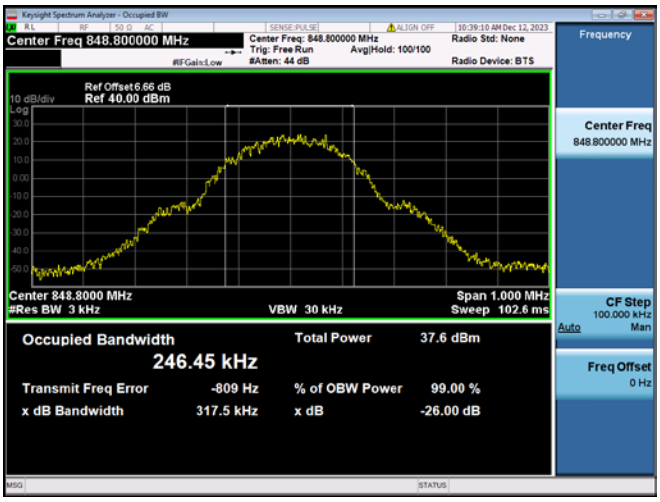

EDGE850 & Channel: 128

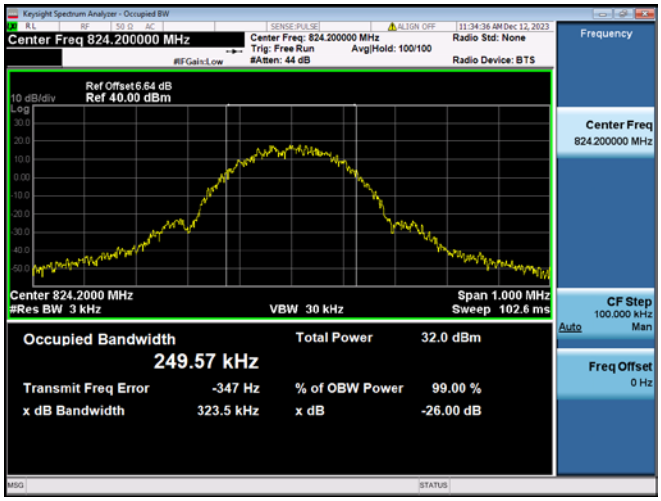

EDGE850 & Channel: 190

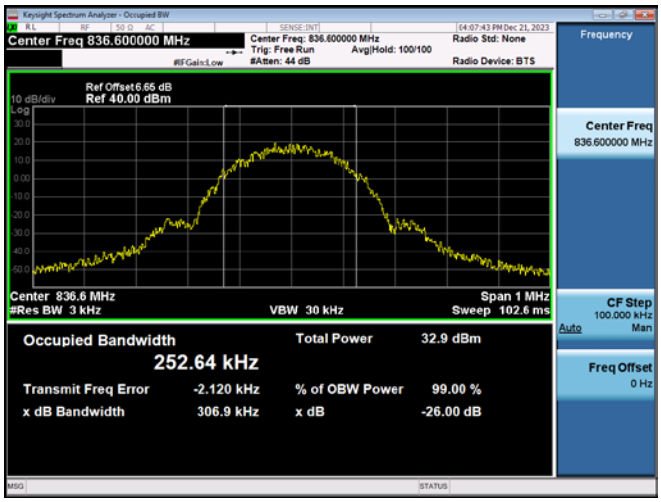

EDGE850 & Channel: 251

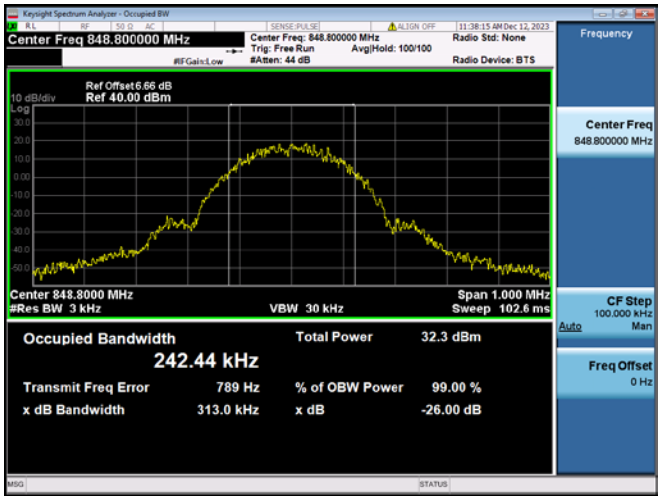

This test report is prohibited to copy or reissue in whole or in part without the approval of Dt&C Co., Ltd.