# SAR Plots

- Verification Plots
- SAR Test Plots

Copyright © 2019, DT&C Co., Ltd.

# DT&C Co., Ltd.

## DUT: Dipole 2450 MHz; Type: D2450V2; Serial: D2450V2 - SN:920

Communication System: UID 0, CW (0); Frequency: 2450 MHz;Duty Cycle: 1:1
Medium parameters used: f = 2450 MHz; $\sigma$ = 1.845 S/m; $\varepsilon_r$ = 39.956; $\rho$ = 1000 kg/m$^3$
Phantom section: Flat Section

**DASY5 Configuration:**
Probe: ES3DV3 - SN3327; ConvF(4.56, 4.56, 4.56); Calibrated: 8/28/2018; Electronics: DAE4 Sn1335
Sensor-Surface: 2mm (Mechanical Surface Detection)
Phantom: SAM with CRP_2016_07_22_middle; Type: QD000P40CD; Serial: TP:1786
Measurement SW: DASY52, Version 52.8 (8); SEMCAD X Version 14.6.10 (7331)

Test Date: 2019-02-19; Ambient Temp: 20.1; Tissue Temp: 20.9

## 2450 MHz System Head Verification (100mW)

**Area Scan (6x8x1):** Measurement grid: dx=12mm, dy=12mm
**Zoom Scan (7x7x7)/Cube 0:** Measurement grid: dx=5mm, dy=5mm, dz=5mm
Power Drift = 0.04 dB
Peak SAR (extrapolated) = 8.99 W/kg
**SAR(1 g) = 4.85 W/kg; SAR(10 g) = 2.33 W/kg**

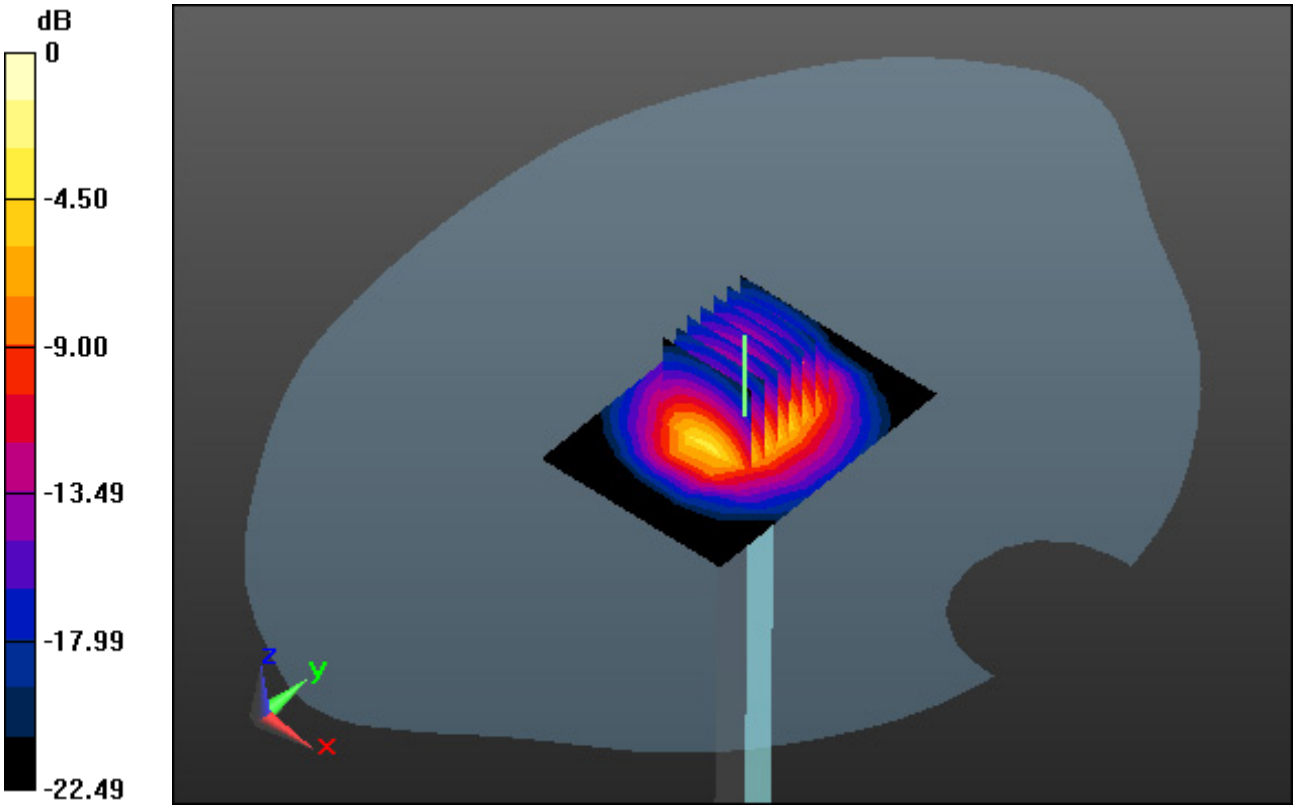


0 dB = 6.02 W/kg

# DT&C Co., Ltd.

## DUT: Dipole 2450 MHz; Type: D2450V2; Serial: D2450V2 - SN:920

Communication System: UID 0, CW (0); Frequency: 2450 MHz;Duty Cycle: 1:1
Medium parameters used: f = 2450 MHz; $\sigma$ = 1.941 S/m; $\varepsilon_r$ = 51.895; $\rho$ = 1000 kg/m$^3$
Phantom section: Flat Section

**DASY5 Configuration:**
Probe: ES3DV3 - SN3327; ConvF(4.5, 4.5, 4.5); Calibrated: 8/28/2018; Electronics: DAE4 Sn1335
Sensor-Surface: 2mm (Mechanical Surface Detection)
Phantom: SAM with CRP_2016_07_22_middle; Type: QD000P40CD; Serial: TP:1786
Measurement SW: DASY52, Version 52.8 (8); SEMCAD X Version 14.6.10 (7331)

Test Date: 2019-02-19; Ambient Temp: 20.1; Tissue Temp: 20.8

## 2450 MHz System Body Verification (100mW)

**Area Scan (6x8x1):** Measurement grid: dx=12mm, dy=12mm
**Zoom Scan (7x7x7)/Cube 0:** Measurement grid: dx=5mm, dy=5mm, dz=5mm
Power Drift = 0.06 dB
Peak SAR (extrapolated) = 9.13 W/kg
**SAR(1 g) = 4.92 W/kg; SAR(10 g) = 2.3 W/kg**

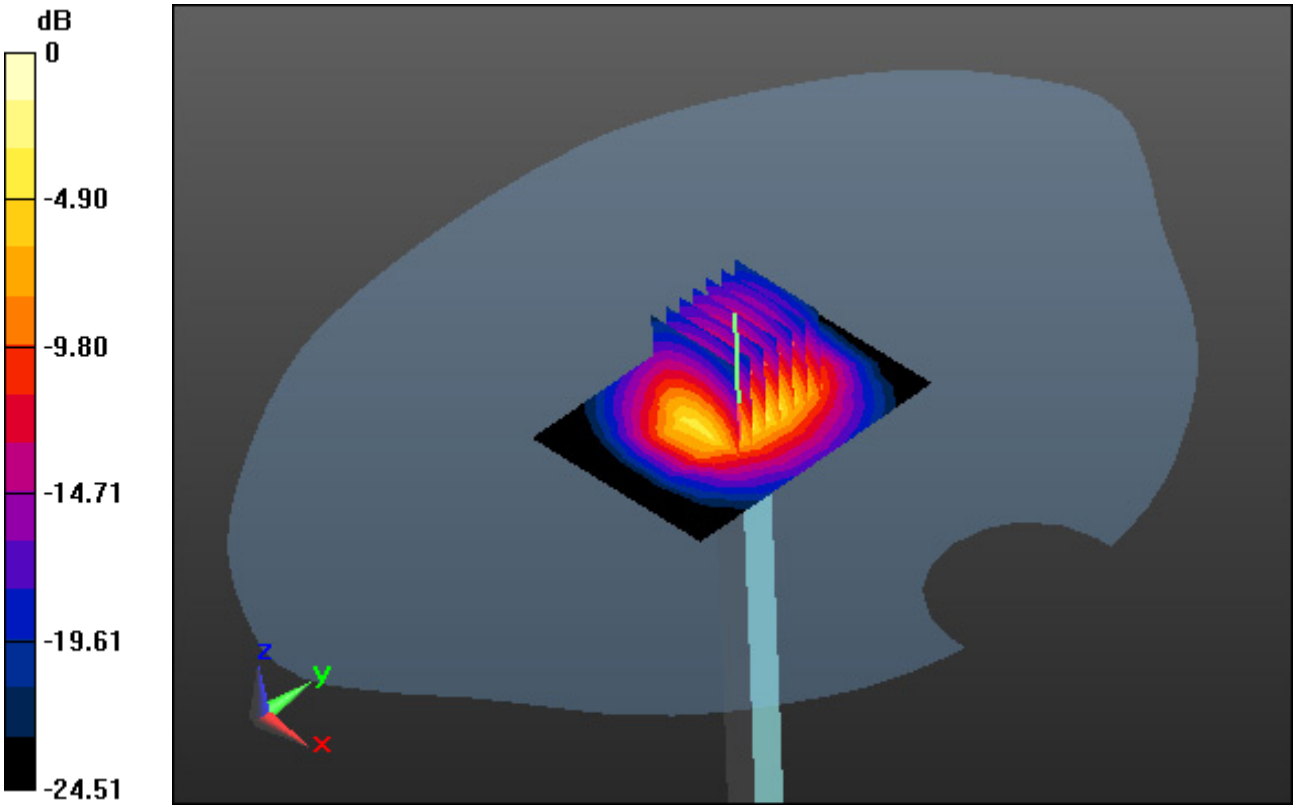


0 dB = 6.14 W/kg

# DT&C Co., Ltd.

## DUT: Dipole 5000 MHz; Type: D5GHzV2; Serial: D5GHzV2 - SN:1212

Communication System: UID 0, CW (0); Frequency: 5300 MHz;Duty Cycle: 1:1
Medium parameters used: f = 5300 MHz; $\sigma$ = 4.747 S/m; $\varepsilon_r$ = 36.353; $\rho$ = 1000 kg/m$^3$
Phantom section: Flat Section

**DASY5 Configuration:**
Probe: EX3DV4 - SN3866; ConvF(4.95, 4.95, 4.95); Calibrated: 5/31/2018; Electronics: DAE4 Sn1391
Sensor-Surface: 1.4mm (Mechanical Surface Detection)
Phantom: SAM with CRP_2016_07_22_middle; Type: QD000P40CD; Serial: TP:1786
Measurement SW: DASY52, Version 52.8 (8); SEMCAD X Version 14.6.10 (7331)

Test Date: 2019-02-04; Ambient Temp: 20.3; Tissue Temp: 21.1

## 5300 MHz System Head Verification (100mW)

**Area Scan (7x8x1):** Measurement grid: dx=10mm, dy=10mm
**Zoom Scan (8x8x7)/Cube 0:** Measurement grid: dx=4mm, dy=4mm, dz=1.4mm, Graded Ratio: 1.4
Power Drift = -0.16 dB
Peak SAR (extrapolated) = 39.3 W/kg
**SAR(1 g) = 8.22 W/kg; SAR(10 g) = 2.34 W/kg**

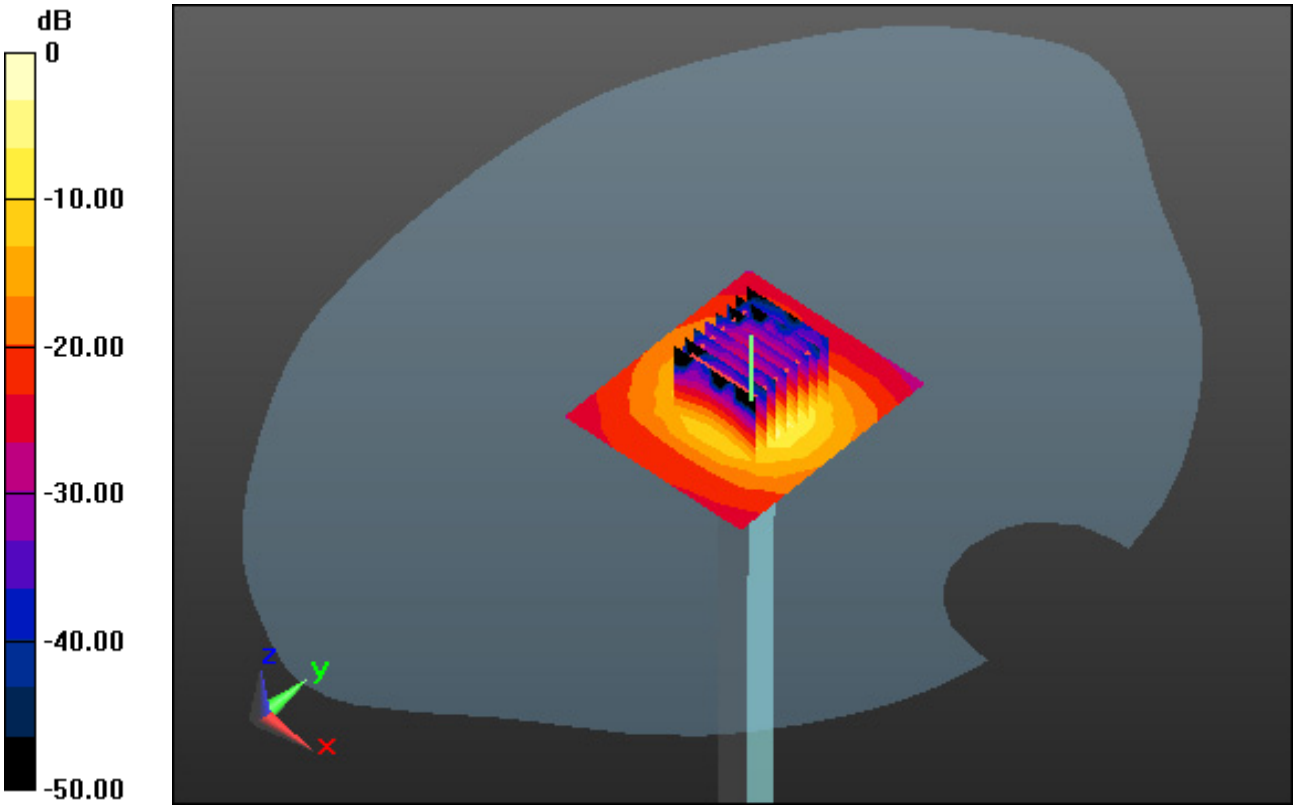


0 dB = 17.4 W/kg

# DT&C Co., Ltd.

## DUT: Dipole 5000 MHz; Type: D5GHzV2; Serial: D5GHzV2 - SN:1212

Communication System: UID 0, CW (0); Frequency: 5300 MHz;Duty Cycle: 1:1
Medium parameters used: f = 5300 MHz; $\sigma$ = 5.622 S/m; $\varepsilon_r$ = 49.689; $\rho$ = 1000 kg/m$^3$
Phantom section: Flat Section

**DASY5 Configuration:**
Probe: EX3DV4 - SN3866; ConvF(4.5, 4.5, 4.5); Calibrated: 5/31/2018; Electronics: DAE4 Sn1391
Sensor-Surface: 1.4mm (Mechanical Surface Detection)
Phantom: SAM with CRP_2016_07_22_middle; Type: QD000P40CD; Serial: TP:1786
Measurement SW: DASY52, Version 52.8 (8); SEMCAD X Version 14.6.10 (7331)

Test Date: 2019-02-04; Ambient Temp: 20.3; Tissue Temp: 21.0

## 5300 MHz System Body Verification (100mW)

**Area Scan (7x8x1):** Measurement grid: dx=10mm, dy=10mm
**Zoom Scan (8x8x7)/Cube 0:** Measurement grid: dx=4mm, dy=4mm, dz=1.4mm, Graded Ratio: 1.4
Power Drift = 0.06 dB
Peak SAR (extrapolated) = 34.0 W/kg
**SAR(1 g) = 7.92 W/kg; SAR(10 g) = 2.17 W/kg**

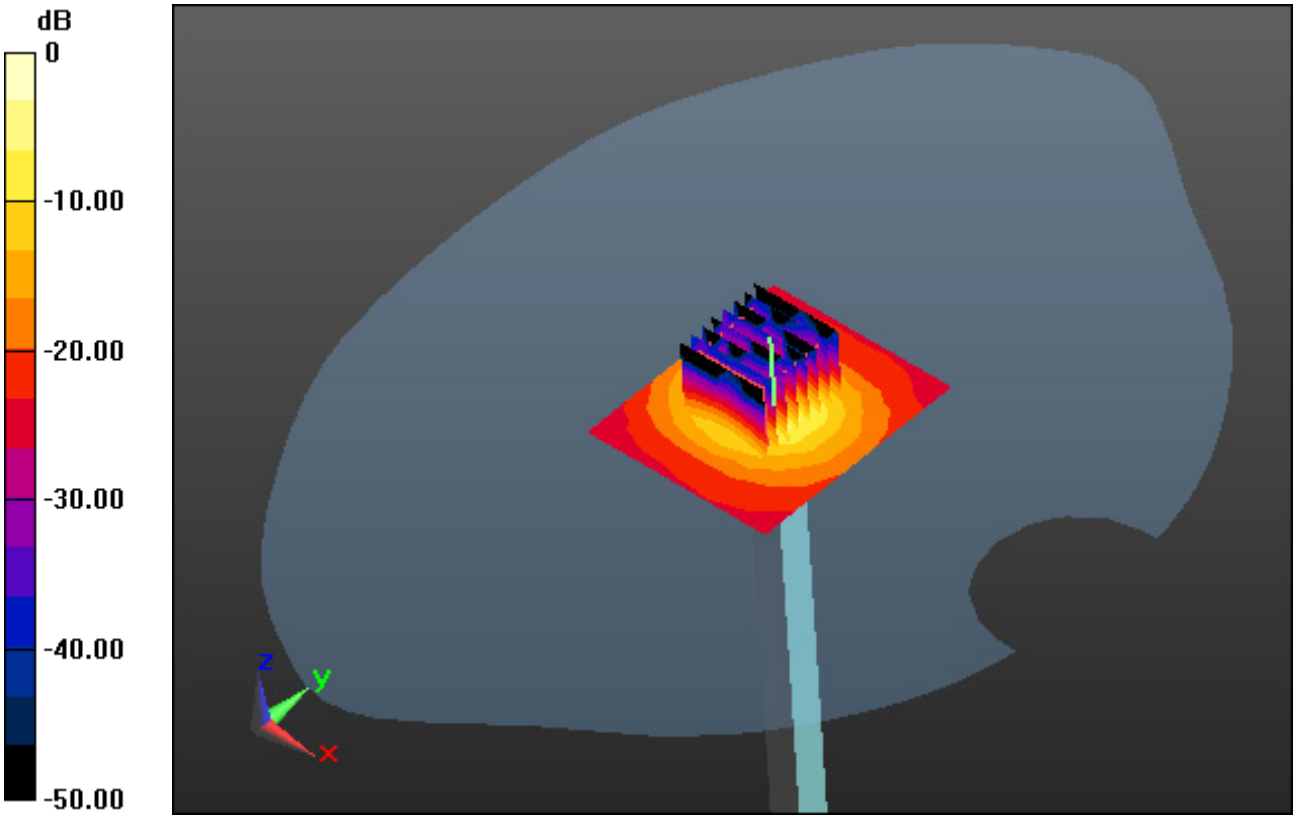


0 dB = 16.1 W/kg

# DT&C Co., Ltd.

## DUT: Dipole 5000 MHz; Type: D5GHzV2; Serial: D5GHzV2 - SN:1212

Communication System: UID 0, CW (0); Frequency: 5600 MHz;Duty Cycle: 1:1
Medium parameters used: f = 5600 MHz; $\sigma$ = 5.056 S/m; $\varepsilon_r$ = 35.841; $\rho$ = 1000 kg/m$^3$
Phantom section: Flat Section

**DASY5 Configuration:**
Probe: EX3DV4 - SN3866; ConvF(4.52, 4.52, 4.52); Calibrated: 5/31/2018; Electronics: DAE4 Sn1391
Sensor-Surface: 1.4mm (Mechanical Surface Detection)
Phantom: SAM with CRP_2016_07_22_middle; Type: QD000P40CD; Serial: TP:1786
Measurement SW: DASY52, Version 52.8 (8); SEMCAD X Version 14.6.10 (7331)

Test Date: 2019-02-05; Ambient Temp: 20.1; Tissue Temp: 20.8

## 5600 MHz System Head Verification (100mW)

**Area Scan (7x8x1):** Measurement grid: dx=10mm, dy=10mm
**Zoom Scan (8x8x7)/Cube 0:** Measurement grid: dx=4mm, dy=4mm, dz=1.4mm, Graded Ratio: 1.4
Power Drift = -0.01 dB
Peak SAR (extrapolated) = 42.4 W/kg
**SAR(1 g) = 7.99 W/kg; SAR(10 g) = 2.25 W/kg**

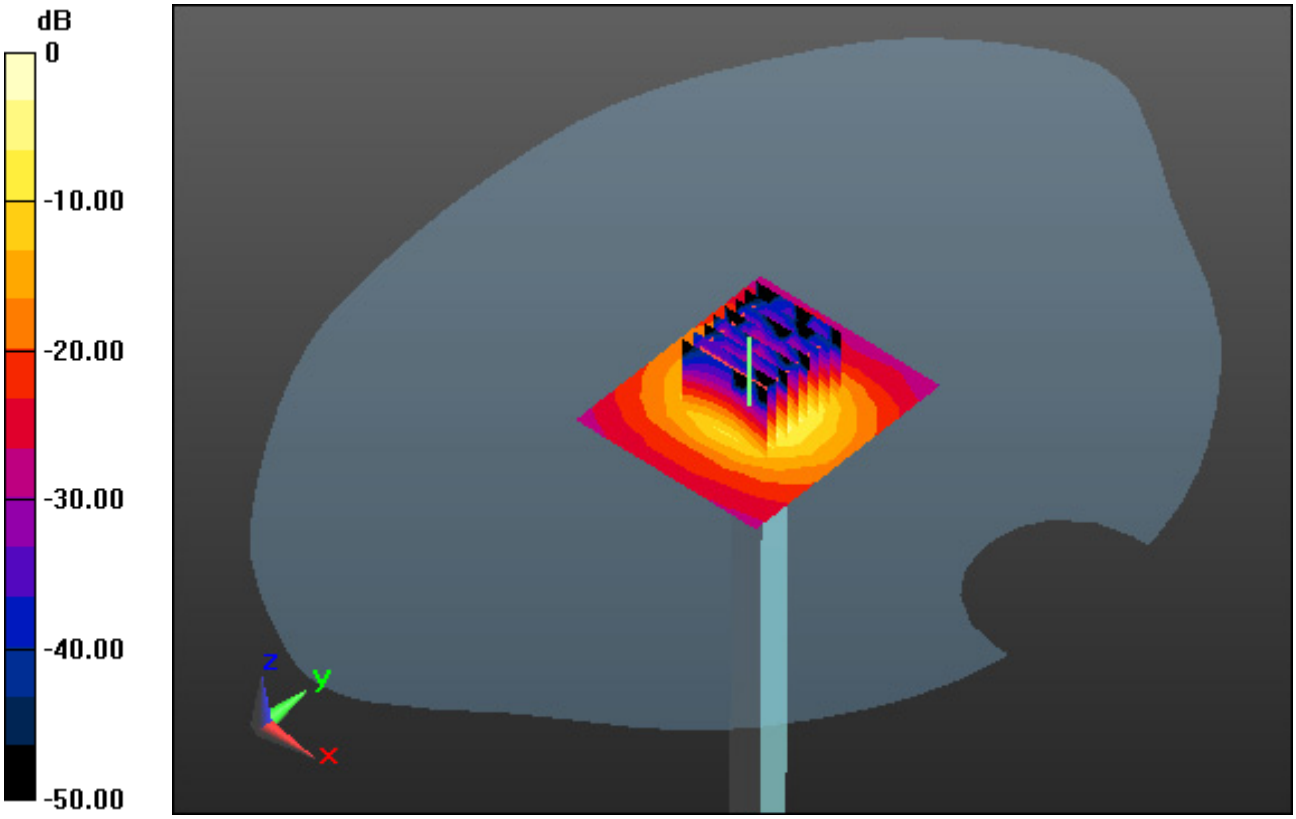


0 dB = 15.9 W/kg

# DT&C Co., Ltd.

## DUT: Dipole 5000 MHz; Type: D5GHzV2; Serial: D5GHzV2 - SN:1212

Communication System: UID 0, CW (0); Frequency: 5600 MHz;Duty Cycle: 1:1
Medium parameters used: f = 5600 MHz; $\sigma$ = 5.854 S/m; $\varepsilon_r$ = 47.14; $\rho$ = 1000 kg/m$^3$
Phantom section: Flat Section

**DASY5 Configuration:**
Probe: EX3DV4 - SN3866; ConvF(3.87, 3.87, 3.87); Calibrated: 5/31/2018; Electronics: DAE4 Sn1391
Sensor-Surface: 1.4mm (Mechanical Surface Detection)
Phantom: SAM with CRP_2016_07_22_middle; Type: QD000P40CD; Serial: TP:1786
Measurement SW: DASY52, Version 52.8 (8); SEMCAD X Version 14.6.10 (7331)

Test Date: 2019-02-05; Ambient Temp: 20.1; Tissue Temp: 21.0

## 5600 MHz System Body Verification (100mW)

**Area Scan (7x8x1):** Measurement grid: dx=10mm, dy=10mm
**Zoom Scan (8x8x7)/Cube 0:** Measurement grid: dx=4mm, dy=4mm, dz=1.4mm, Graded Ratio: 1.4
Power Drift = 0.07 dB
Peak SAR (extrapolated) = 42.9 W/kg
**SAR(1 g) = 8.06 W/kg; SAR(10 g) = 2.21 W/kg**

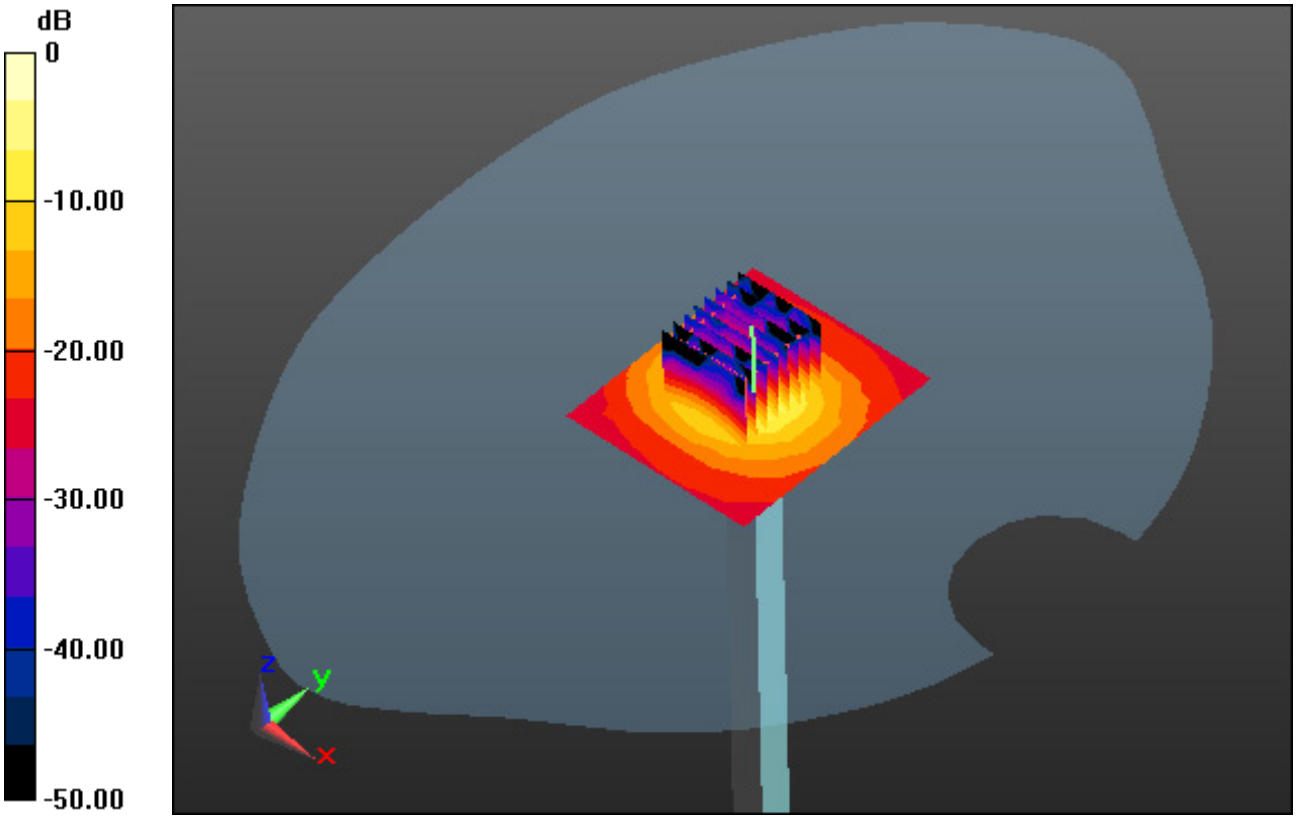


0 dB = 16.6 W/kg

# DT&C Co., Ltd.

## DUT: Dipole 5000 MHz; Type: D5GHzV2; Serial: D5GHzV2 - SN:1212

Communication System: UID 0, CW (0); Frequency: 5800 MHz;Duty Cycle: 1:1
Medium parameters used: f = 5800 MHz; $\sigma$ = 5.317 S/m; $\varepsilon_r$ = 35.638; $\rho$ = 1000 kg/m$^3$
Phantom section: Flat Section

**DASY5 Configuration:**
Probe: EX3DV4 - SN3866; ConvF(4.69, 4.69, 4.69); Calibrated: 5/31/2018; Electronics: DAE4 Sn1391
Sensor-Surface: 1.4mm (Mechanical Surface Detection)
Phantom: SAM with CRP_2016_07_22_middle; Type: QD000P40CD; Serial: TP:1786
Measurement SW: DASY52, Version 52.8 (8); SEMCAD X Version 14.6.10 (7331)

Test Date: 2019-02-06; Ambient Temp: 20.2; Tissue Temp: 21.0

## 5800 MHz System Head Verification (100mW)

**Area Scan (7x8x1):** Measurement grid: dx=10mm, dy=10mm
**Zoom Scan (8x8x7)/Cube 0:** Measurement grid: dx=4mm, dy=4mm, dz=1.4mm, Graded Ratio: 1.4
Power Drift = -0.05 dB
Peak SAR (extrapolated) = 39.4 W/kg
**SAR(1 g) = 7.61 W/kg; SAR(10 g) = 2.15 W/kg**

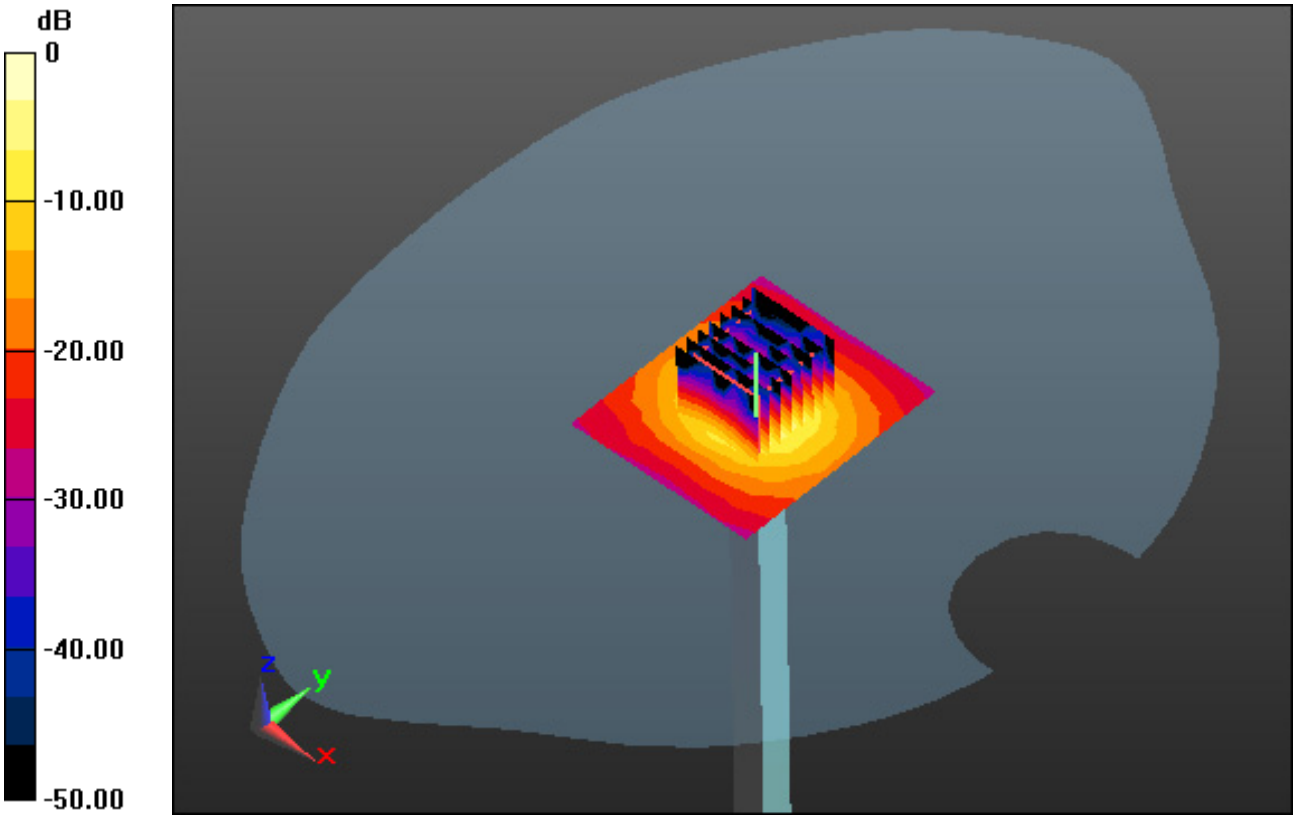


0 dB = 15.3 W/kg

# DT&C Co., Ltd.

## DUT: Dipole 5000 MHz; Type: D5GHzV2; Serial: D5GHzV2 - SN:1212

Communication System: UID 0, CW (0); Frequency: 5800 MHz;Duty Cycle: 1:1
Medium parameters used: f = 5800 MHz; $\sigma$ = 6.067 S/m; $\varepsilon_r$ = 46.784; $\rho$ = 1000 kg/m$^3$
Phantom section: Flat Section

**DASY5 Configuration:**
Probe: EX3DV4 - SN3866; ConvF(4.16, 4.16, 4.16); Calibrated: 5/31/2018; Electronics: DAE4 Sn1391
Sensor-Surface: 1.4mm (Mechanical Surface Detection)
Phantom: SAM with CRP_2016_07_22_middle; Type: QD000P40CD; Serial: TP:1786
Measurement SW: DASY52, Version 52.8 (8); SEMCAD X Version 14.6.10 (7331)

Test Date: 2019-02-06; Ambient Temp: 20.2; Tissue Temp: 20.9

## 5800 MHz System Body Verification (100mW)

**Area Scan (7x8x1):** Measurement grid: dx=10mm, dy=10mm
**Zoom Scan (8x8x7)/Cube 0:** Measurement grid: dx=4mm, dy=4mm, dz=1.4mm, Graded Ratio: 1.4
Power Drift = -0.06 dB
Peak SAR (extrapolated) = 38.1 W/kg
**SAR(1 g) = 7.21 W/kg; SAR(10 g) = 2.02 W/kg**

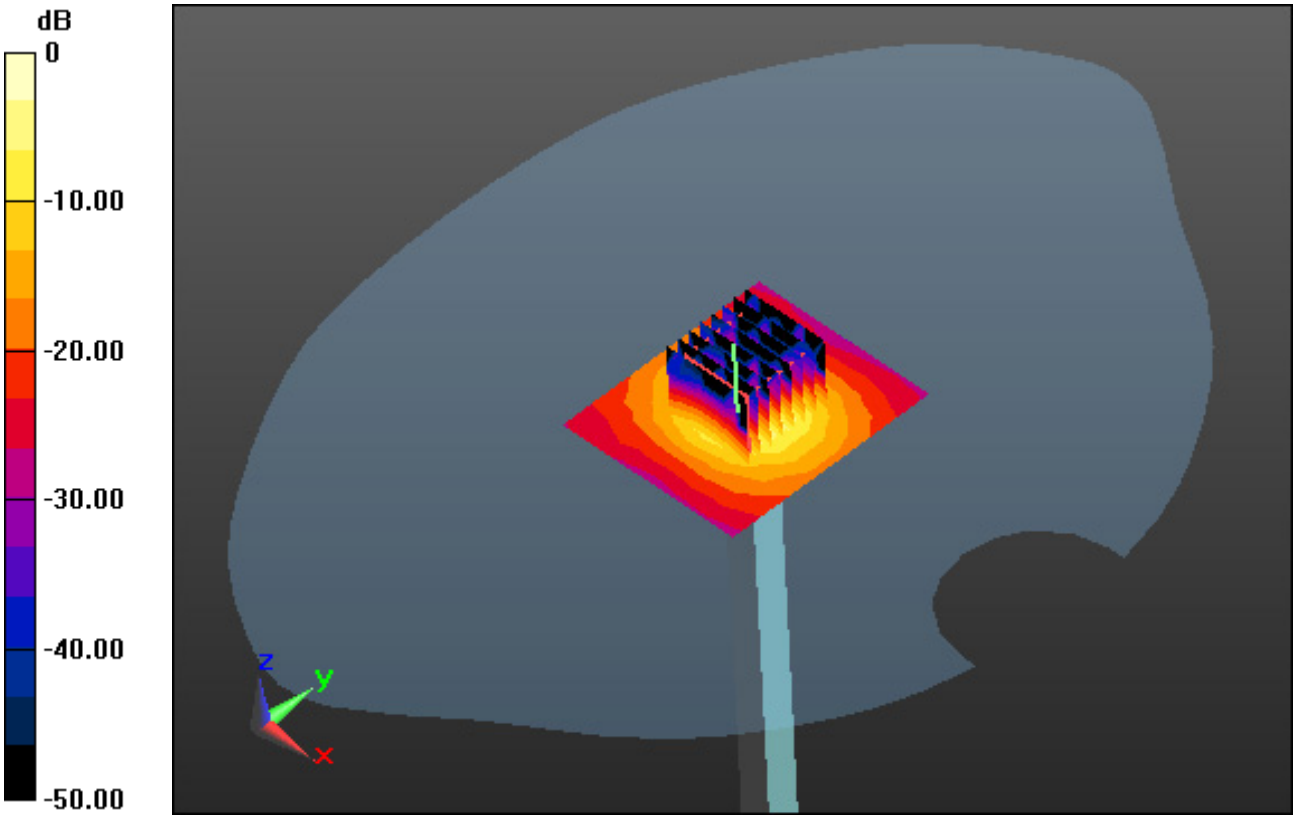


0 dB = 15.3 W/kg

# DT&C Co., Ltd.

## DUT: PM85; Type: Bar

Communication System: UID 0, 2.4 GHz W-LAN (0); Frequency: 2462 MHz;Duty Cycle: 1:1
Medium parameters used: f = 2462 MHz; $\sigma$ = 1.861 S/m; $\varepsilon_r$ = 39.917; $\rho$ = 1000 kg/m$^3$
Phantom section: Left Section

**DASY5 Configuration:**
Probe: ES3DV3 - SN3327; ConvF(4.56, 4.56, 4.56); Calibrated: 8/28/2018; Electronics: DAE4 Sn1335
Sensor-Surface: 3mm (Mechanical Surface Detection)
Phantom: SAM with CRP_2016_07_22_middle; Type: QD000P40CD; Serial: TP:1786
Measurement SW: DASY52, Version 52.8 (8); SEMCAD X Version 14.6.10 (7331)

Test Date: 2019-02-19; Ambient Temp: 20.1; Tissue Temp: 20.9

## Left Touch, WLAN(802.11b) Ch. 11, Ant Internal, Standard Battery

**Area Scan (11x16x1):** Measurement grid: dx=12mm, dy=12mm
**Zoom Scan (7x7x7)/Cube 0:** Measurement grid: dx=5mm, dy=5mm, dz=5mm
Power Drift = 0.01 dB
Peak SAR (extrapolated) = 1.13 W/kg
**SAR(1 g) = 0.549 W/kg; SAR(10 g) = 0.262 W/kg**

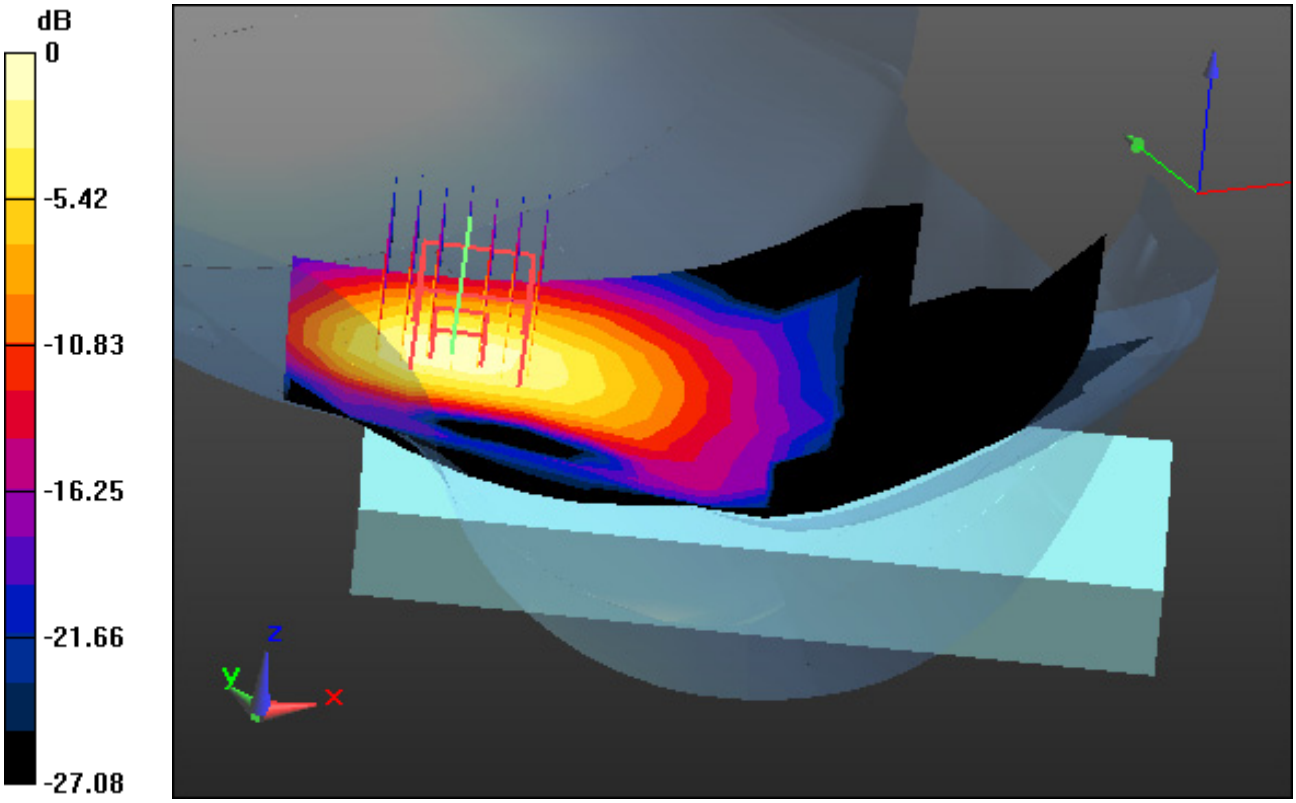


0 dB = 0.716 W/kg

# DT&C Co., Ltd.

## DUT: PM85; Type: Bar

Communication System: UID 0, W-LAN_5300 (0); Frequency: 5300 MHz;Duty Cycle: 1:1
Medium parameters used: f = 5300 MHz; $\sigma$ = 4.747 S/m; $\varepsilon_r$ = 36.353; $\rho$ = 1000 kg/m$^3$
Phantom section: Right Section

**DASY5 Configuration:**
Probe: EX3DV4 - SN3866; ConvF(4.95, 4.95, 4.95); Calibrated: 5/31/2018; Electronics: DAE4 Sn1391
Sensor-Surface: 1.4mm (Mechanical Surface Detection)
Phantom: SAM with CRP_2016_07_22_middle; Type: QD000P40CD; Serial: TP:1786
Measurement SW: DASY52, Version 52.8 (8); SEMCAD X Version 14.6.10 (7331)

Test Date: 2019-02-04; Ambient Temp: 20.3; Tissue Temp: 21.1

## Right Tilt, WLAN(802.11a) Ch. 60, Ant Internal, Standard Battery

**Area Scan (13x20x1):** Measurement grid: dx=10mm, dy=10mm
**Zoom Scan (9x9x7)/Cube 0:** Measurement grid: dx=4mm, dy=4mm, dz=1.4mm, Graded Ratio: 1.4
Power Drift = 0.11 dB
Peak SAR (extrapolated) = 2.06 W/kg
**SAR(1 g) = 0.461 W/kg; SAR(10 g) = 0.159 W/kg**

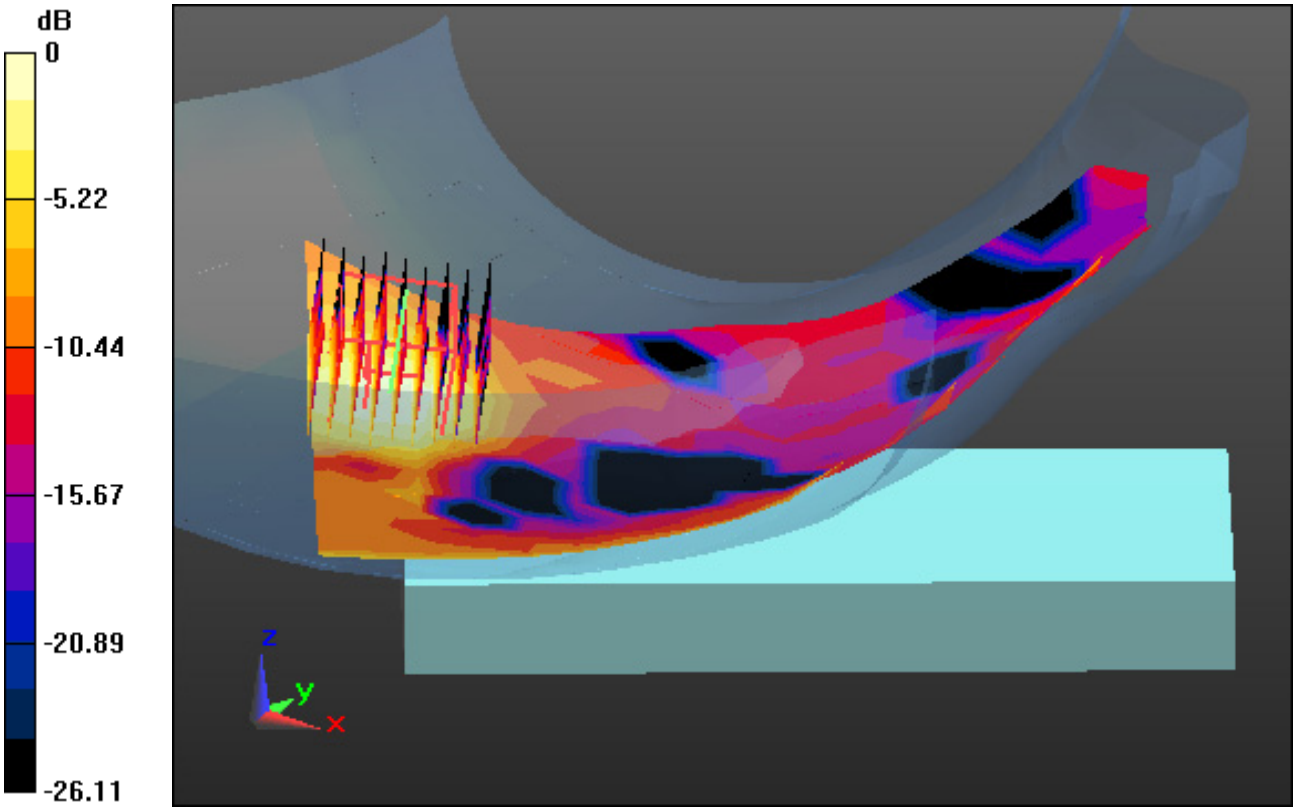


0 dB = 1.09 W/kg

# DT&C Co., Ltd.

## DUT: PM85; Type: Bar

Communication System: UID 0, W-LAN_5600 (0); Frequency: 5700 MHz;Duty Cycle: 1:1
Medium parameters used: f = 5700 MHz; $\sigma$ = 5.195 S/m; $\varepsilon_r$ = 35.736; $\rho$ = 1000 kg/m$^3$
Phantom section: Right Section

**DASY5 Configuration:**
Probe: EX3DV4 - SN3866; ConvF(4.52, 4.52, 4.52); Calibrated: 5/31/2018; Electronics: DAE4 Sn1391
Sensor-Surface: 1.4mm (Mechanical Surface Detection)
Phantom: SAM with CRP_2016_07_22_middle; Type: QD000P40CD; Serial: TP:1786
Measurement SW: DASY52, Version 52.8 (8); SEMCAD X Version 14.6.10 (7331)

Test Date: 2019-02-05; Ambient Temp: 20.1; Tissue Temp: 20.8

## Right Tilt, WLAN(802.11a) Ch. 140, Ant Internal, Standard Battery

**Area Scan (13x20x1):** Measurement grid: dx=10mm, dy=10mm
**Zoom Scan (8x8x7)/Cube 0:** Measurement grid: dx=4mm, dy=4mm, dz=1.4mm, Graded Ratio: 1.4
Power Drift = 0.06 dB
Peak SAR (extrapolated) = 1.59 W/kg
**SAR(1 g) = 0.453 W/kg; SAR(10 g) = 0.148 W/kg**

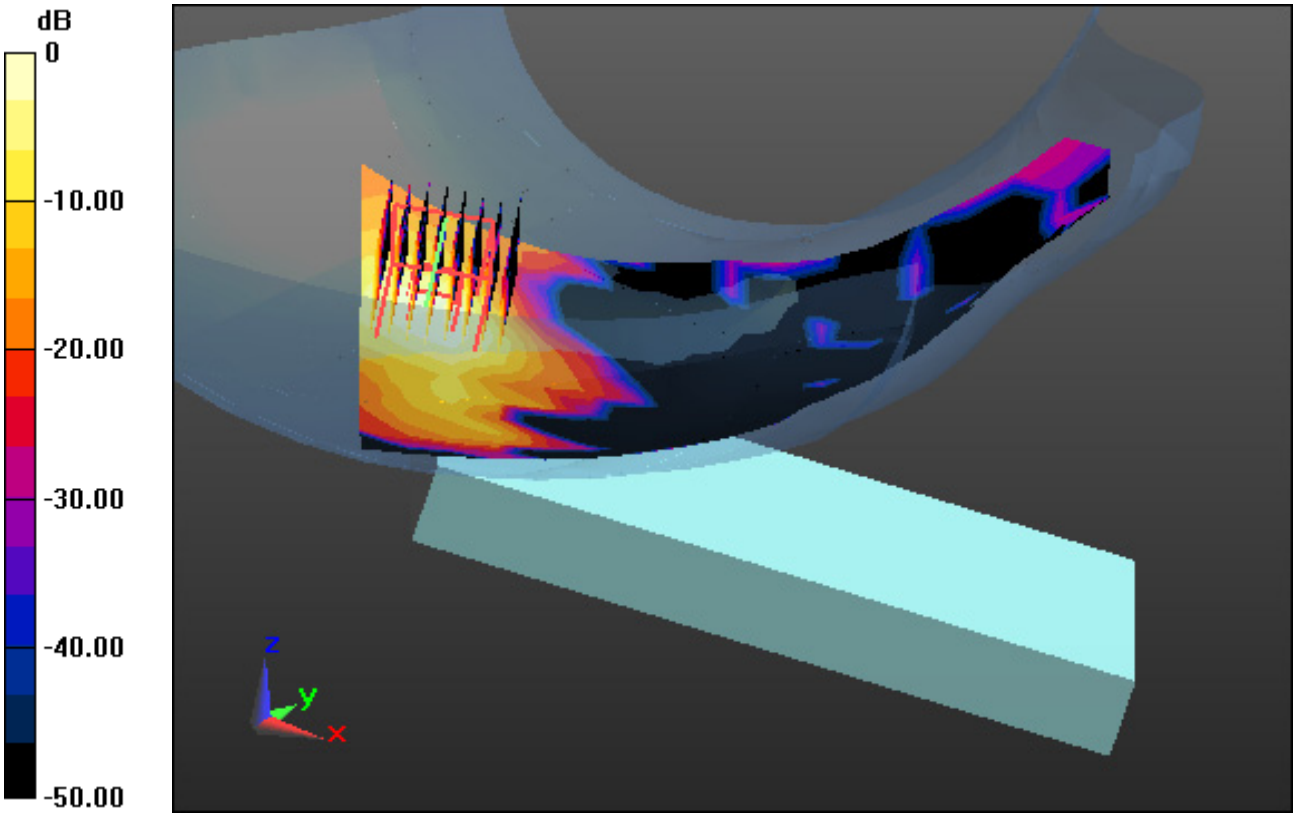


0 dB = 1.04 W/kg

# DT&C Co., Ltd.

## DUT: PM85; Type: Bar

Communication System: UID 0, W-LAN_5800 (0); Frequency: 5745 MHz;Duty Cycle: 1:1
Medium parameters used: f = 5745 MHz; $\sigma$ = 5.221 S/m; $\varepsilon_r$ = 35.677; $\rho$ = 1000 kg/m$^3$
Phantom section: Left Section

**DASY5 Configuration:**
Probe: EX3DV4 - SN3866; ConvF(4.69, 4.69, 4.69); Calibrated: 5/31/2018; Electronics: DAE4 Sn1391
Sensor-Surface: 1.4mm (Mechanical Surface Detection)
Phantom: SAM with CRP_2016_07_22_middle; Type: QD000P40CD; Serial: TP:1786
Measurement SW: DASY52, Version 52.8 (8); SEMCAD X Version 14.6.10 (7331)

Test Date: 2019-02-06; Ambient Temp: 20.2; Tissue Temp: 21.0

## Left Touch, WLAN(802.11a) Ch. 149, Ant Internal, Standard Battery

**Area Scan (13x20x1):** Measurement grid: dx=10mm, dy=10mm
**Zoom Scan (9x9x7)/Cube 0:** Measurement grid: dx=4mm, dy=4mm, dz=1.4mm, Graded Ratio: 1.4
Power Drift = -0.02 dB
Peak SAR (extrapolated) = 1.75 W/kg
**SAR(1 g) = 0.419 W/kg; SAR(10 g) = 0.115 W/kg**

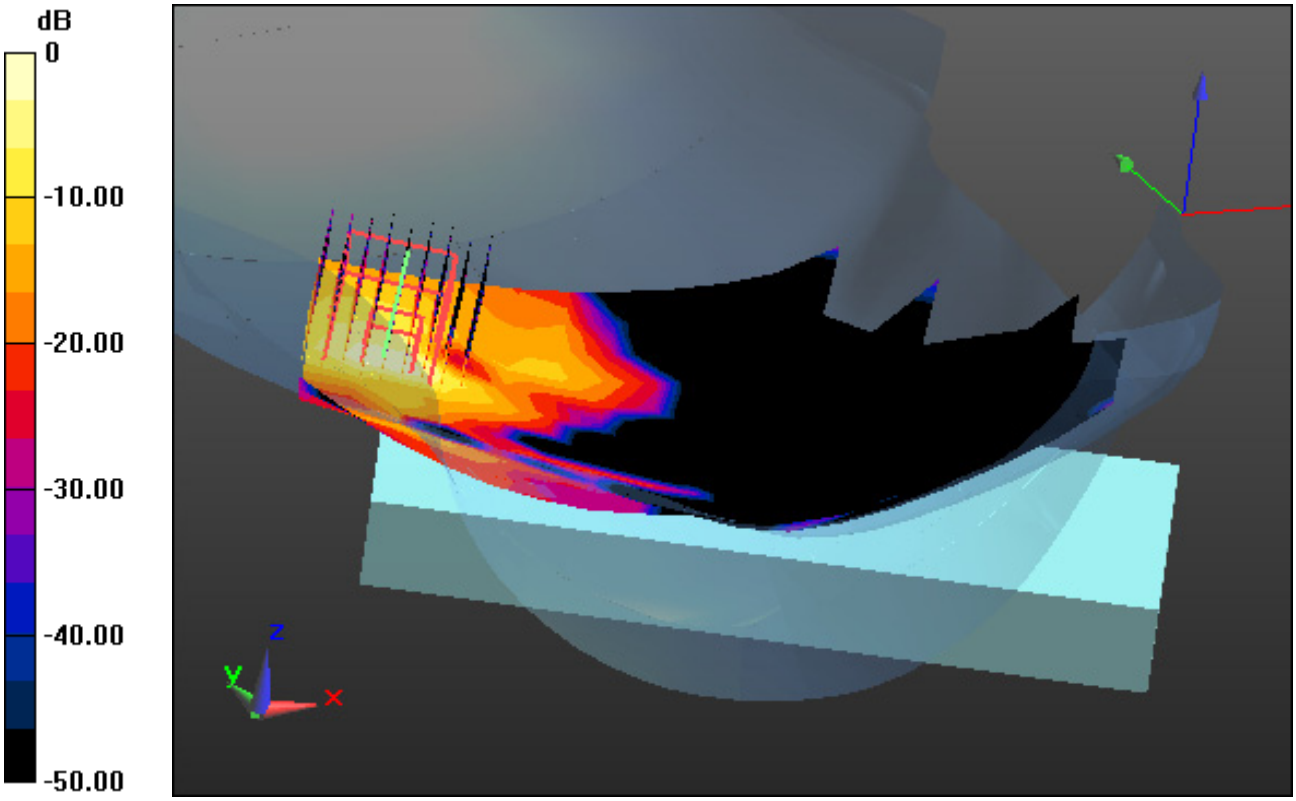


0 dB = 1.05 W/kg

# DT&C Co., Ltd.

## DUT: PM85; Type: Bar

Communication System: UID 0, 2.4 GHz W-LAN (0); Frequency: 2462 MHz;Duty Cycle: 1:1
Medium parameters used: f = 2462 MHz; $\sigma$ = 1.957 S/m; $\varepsilon_r$ = 51.864; $\rho$ = 1000 kg/m$^3$
Phantom section: Flat Section

**DASY5 Configuration:**
Probe: ES3DV3 - SN3327; ConvF(4.5, 4.5, 4.5); Calibrated: 8/28/2018; Electronics: DAE4 Sn1335
Sensor-Surface: 3mm (Mechanical Surface Detection)
Phantom: SAM with CRP_2016_07_22_middle; Type: QD000P40CD; Serial: TP:1786
Measurement SW: DASY52, Version 52.8 (8); SEMCAD X Version 14.6.10 (7331)

Test Date: 2019-02-19; Ambient Temp: 20.1; Tissue Temp: 20.8

### 1 cm space from Body, Front, WLAN(802.11b) Ch. 11, Ant Internal

**Area Scan (11x17x1):** Measurement grid: dx=12mm, dy=12mm
**Zoom Scan (7x7x7)/Cube 0:** Measurement grid: dx=5mm, dy=5mm, dz=5mm
Power Drift = 0.02 dB
Peak SAR (extrapolated) = 0.142 W/kg
**SAR(1 g) = 0.079 W/kg; SAR(10 g) = 0.045 W/kg**

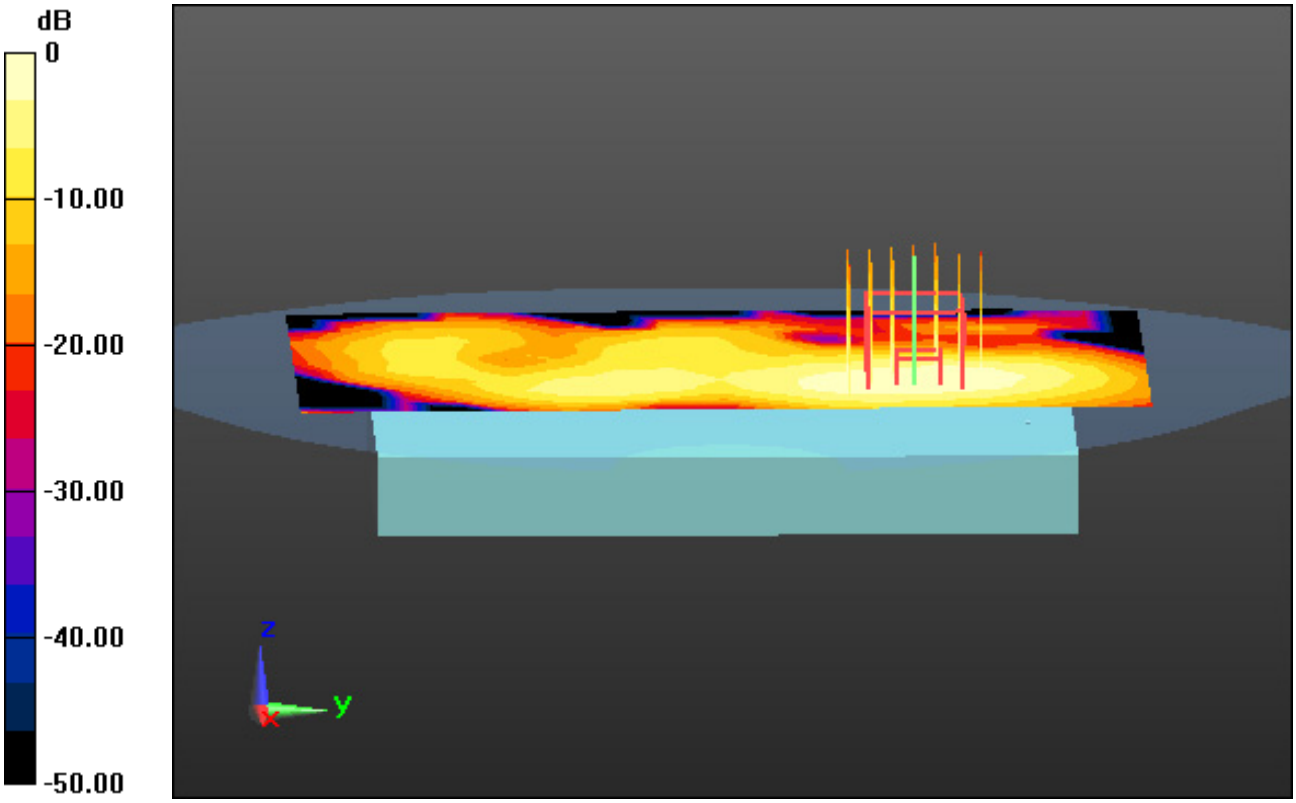


0 dB = 0.0972 W/kg

# DT&C Co., Ltd.

## DUT: PM85; Type: Bar

Communication System: UID 0, W-LAN_5300 (0); Frequency: 5300 MHz;Duty Cycle: 1:1
Medium parameters used: f = 5300 MHz; $\sigma$ = 5.622 S/m; $\varepsilon_r$ = 49.689; $\rho$ = 1000 kg/m$^3$
Phantom section: Flat Section

**DASY5 Configuration:**
Probe: EX3DV4 - SN3866; ConvF(4.5, 4.5, 4.5); Calibrated: 5/31/2018; Electronics: DAE4 Sn1391
Sensor-Surface: 1.4mm (Mechanical Surface Detection)
Phantom: SAM with CRP_2016_07_22_middle; Type: QD000P40CD; Serial: TP:1786
Measurement SW: DASY52, Version 52.8 (8); SEMCAD X Version 14.6.10 (7331)

Test Date: 2019-02-04; Ambient Temp: 20.3; Tissue Temp: 21.0

### 1 cm space from Body, Rear, WLAN(802.11a) Ch. 60, Ant Internal

**Area Scan (13x20x1):** Measurement grid: dx=10mm, dy=10mm
**Zoom Scan (8x9x7)/Cube 0:** Measurement grid: dx=4mm, dy=4mm, dz=1.4mm, Graded Ratio: 1.4
Power Drift = 0.08 dB
Peak SAR (extrapolated) = 0.483 W/kg
**SAR(1 g) = 0.133 W/kg; SAR(10 g) = 0.043 W/kg**

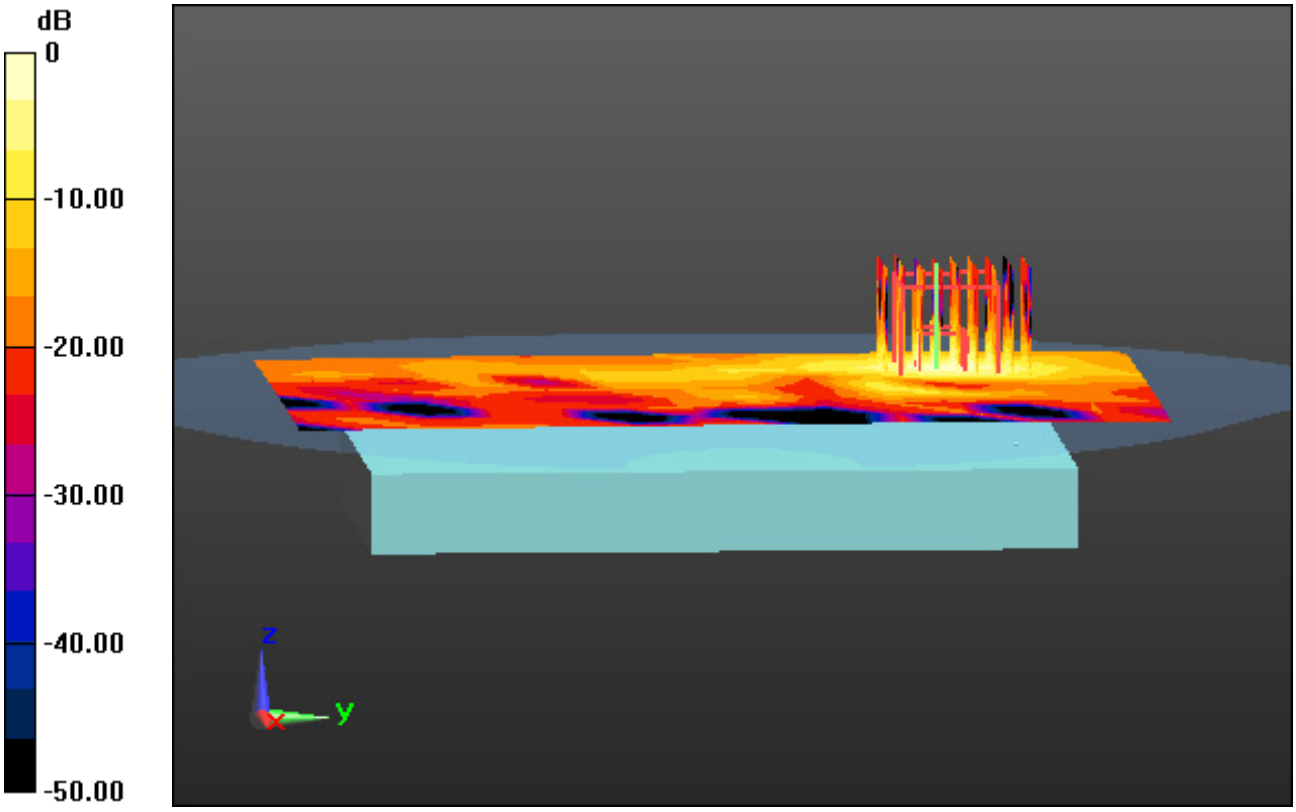


0 dB = 0.298 W/kg

# DT&C Co., Ltd.

## DUT: PM85; Type: Bar

Communication System: UID 0, W-LAN_5600 (0); Frequency: 5700 MHz;Duty Cycle: 1:1
Medium parameters used: f = 5700 MHz; $\sigma$ = 5.998 S/m; $\varepsilon_r$ = 46.91; $\rho$ = 1000 kg/m$^3$
Phantom section: Flat Section

**DASY5 Configuration:**
Probe: EX3DV4 - SN3866; ConvF(3.87, 3.87, 3.87); Calibrated: 5/31/2018; Electronics: DAE4 Sn1391
Sensor-Surface: 1.4mm (Mechanical Surface Detection)
Phantom: SAM with CRP_2016_07_22_middle; Type: QD000P40CD; Serial: TP:1786
Measurement SW: DASY52, Version 52.8 (8); SEMCAD X Version 14.6.10 (7331)

Test Date: 2019-02-05; Ambient Temp: 20.1; Tissue Temp: 21.0

### 1 cm space from Body, Rear, WLAN(802.11a) Ch. 140, Ant Internal

**Area Scan (14x21x1):** Measurement grid: dx=10mm, dy=10mm
**Zoom Scan (9x9x7)/Cube 0:** Measurement grid: dx=4mm, dy=4mm, dz=1.4mm, Graded Ratio: 1.4
Power Drift = -0.09 dB
Peak SAR (extrapolated) = 0.714 W/kg
**SAR(1 g) = 0.177 W/kg; SAR(10 g) = 0.066 W/kg**

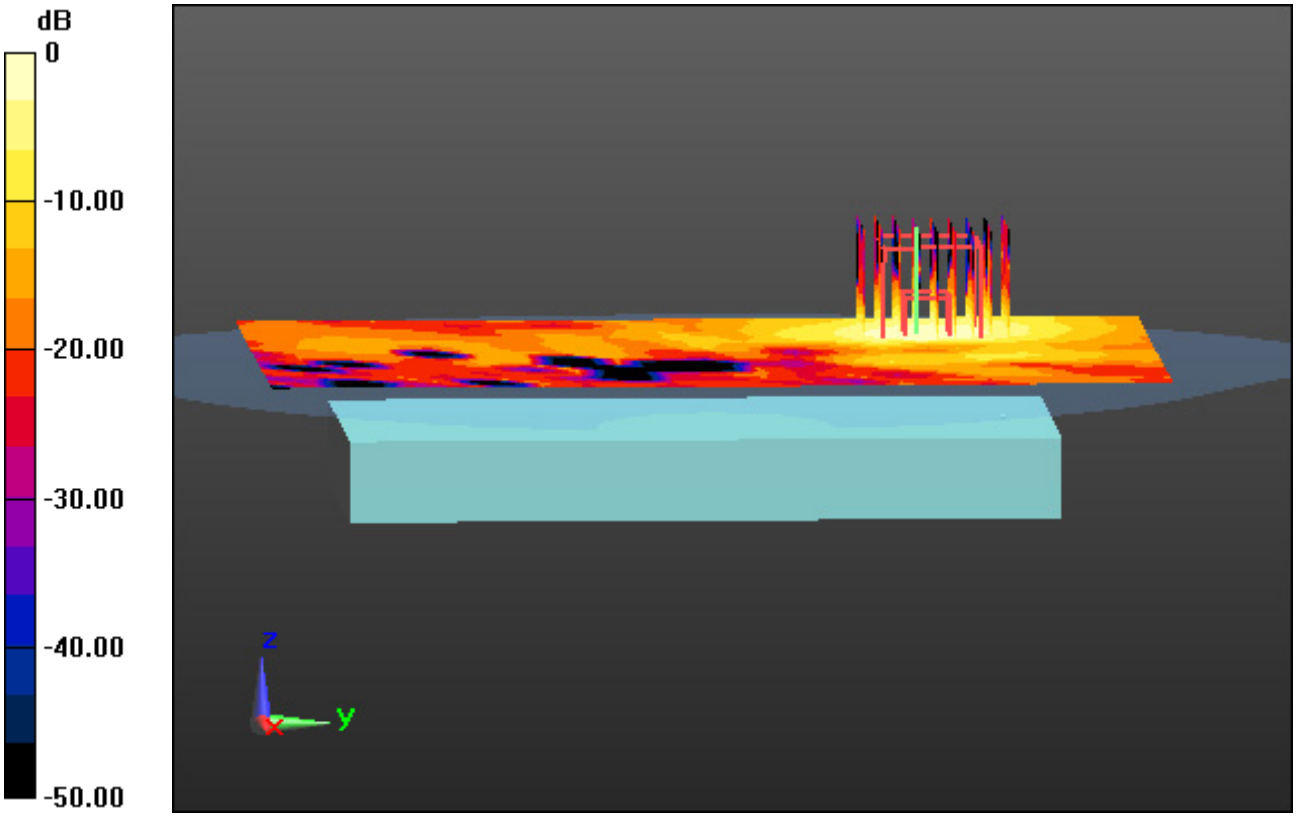


0 dB = 0.421 W/kg

# DT&C Co., Ltd.

## DUT: PM85; Type: Bar

Communication System: UID 0, W-LAN_5800 (0); Frequency: 5745 MHz;Duty Cycle: 1:1
Medium parameters used: f = 5745 MHz; $\sigma$ = 5.989 S/m; $\varepsilon_r$ = 46.883; $\rho$ = 1000 kg/m$^3$
Phantom section: Flat Section

**DASY5 Configuration:**
Probe: EX3DV4 - SN3866; ConvF(4.16, 4.16, 4.16); Calibrated: 5/31/2018; Electronics: DAE4 Sn1391
Sensor-Surface: 1.4mm (Mechanical Surface Detection)
Phantom: SAM with CRP_2016_07_22_middle; Type: QD000P40CD; Serial: TP:1786
Measurement SW: DASY52, Version 52.8 (8); SEMCAD X Version 14.6.10 (7331)

Test Date: 2019-02-06; Ambient Temp: 20.2; Tissue Temp: 20.9

### 1 cm space from Body, Rear, WLAN(802.11a) Ch. 149, Ant Internal

**Area Scan (14x21x1):** Measurement grid: dx=10mm, dy=10mm
**Zoom Scan (9x9x7)/Cube 0:** Measurement grid: dx=4mm, dy=4mm, dz=1.4mm, Graded Ratio: 1.4
Power Drift = -0.12 dB
Peak SAR (extrapolated) = 0.629 W/kg
**SAR(1 g) = 0.181 W/kg; SAR(10 g) = 0.067 W/kg**

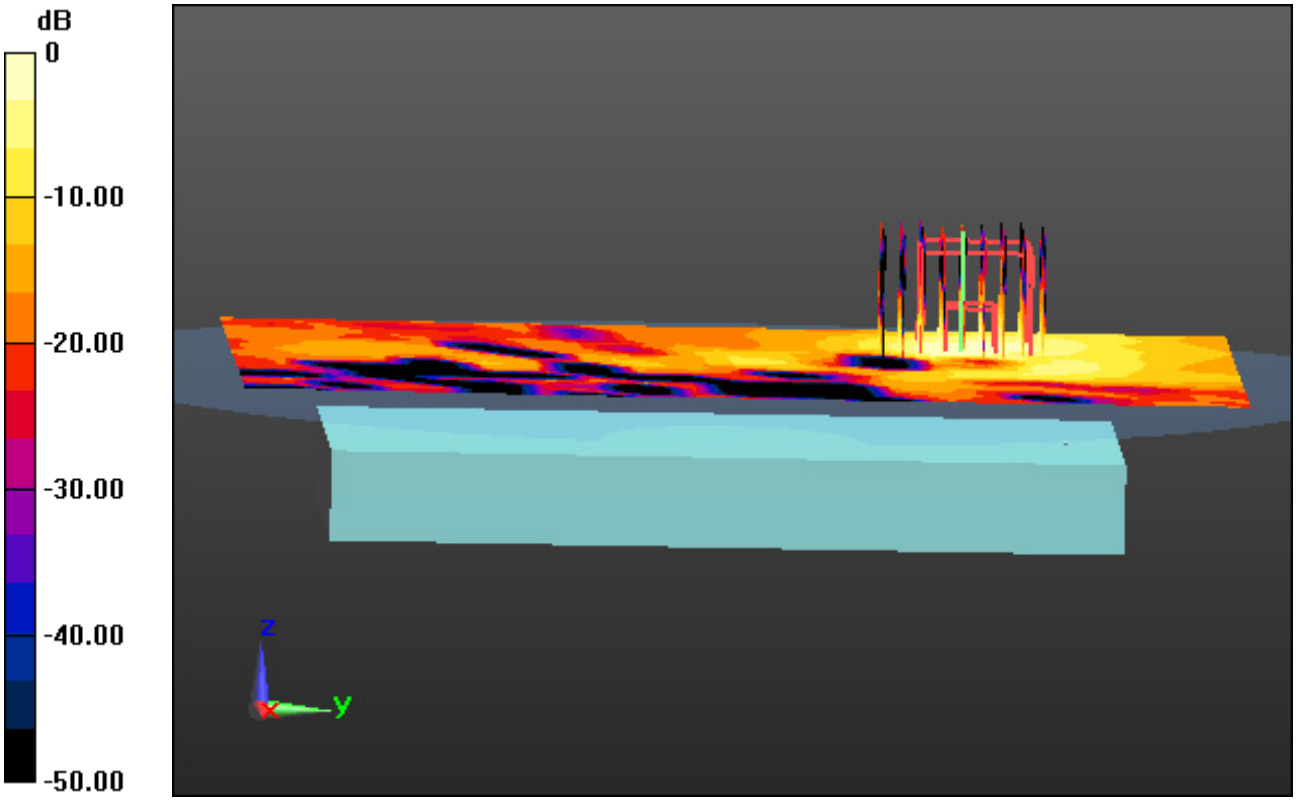


0 dB = 0.418 W/kg

# DT&C Co., Ltd.

## DUT: PM85; Type: Bar

Communication System: UID 0, 2.4 GHz W-LAN (0); Frequency: 2462 MHz;Duty Cycle: 1:1
Medium parameters used: f = 2462 MHz; $\sigma$ = 1.957 S/m; $\varepsilon_r$ = 51.864; $\rho$ = 1000 kg/m$^3$
Phantom section: Flat Section

**DASY5 Configuration:**
Probe: ES3DV3 - SN3327; ConvF(4.5, 4.5, 4.5); Calibrated: 8/28/2018; Electronics: DAE4 Sn1335
Sensor-Surface: 3mm (Mechanical Surface Detection)
Phantom: SAM with CRP_2016_07_22_middle; Type: QD000P40CD; Serial: TP:1786
Measurement SW: DASY52, Version 52.8 (8); SEMCAD X Version 14.6.10 (7331)

Test Date: 2019-02-19; Ambient Temp: 20.1; Tissue Temp: 20.8

## Touch from Body, Front, WLAN(802.11b) Ch. 11, Ant Internal

**Area Scan (11x17x1):** Measurement grid: dx=12mm, dy=12mm
**Zoom Scan (7x7x7)/Cube 0:** Measurement grid: dx=5mm, dy=5mm, dz=5mm
Power Drift = -0.19 dB
Peak SAR (extrapolated) = 0.527 W/kg
**SAR(1 g) = 0.240 W/kg; SAR(10 g) = 0.104 W/kg**

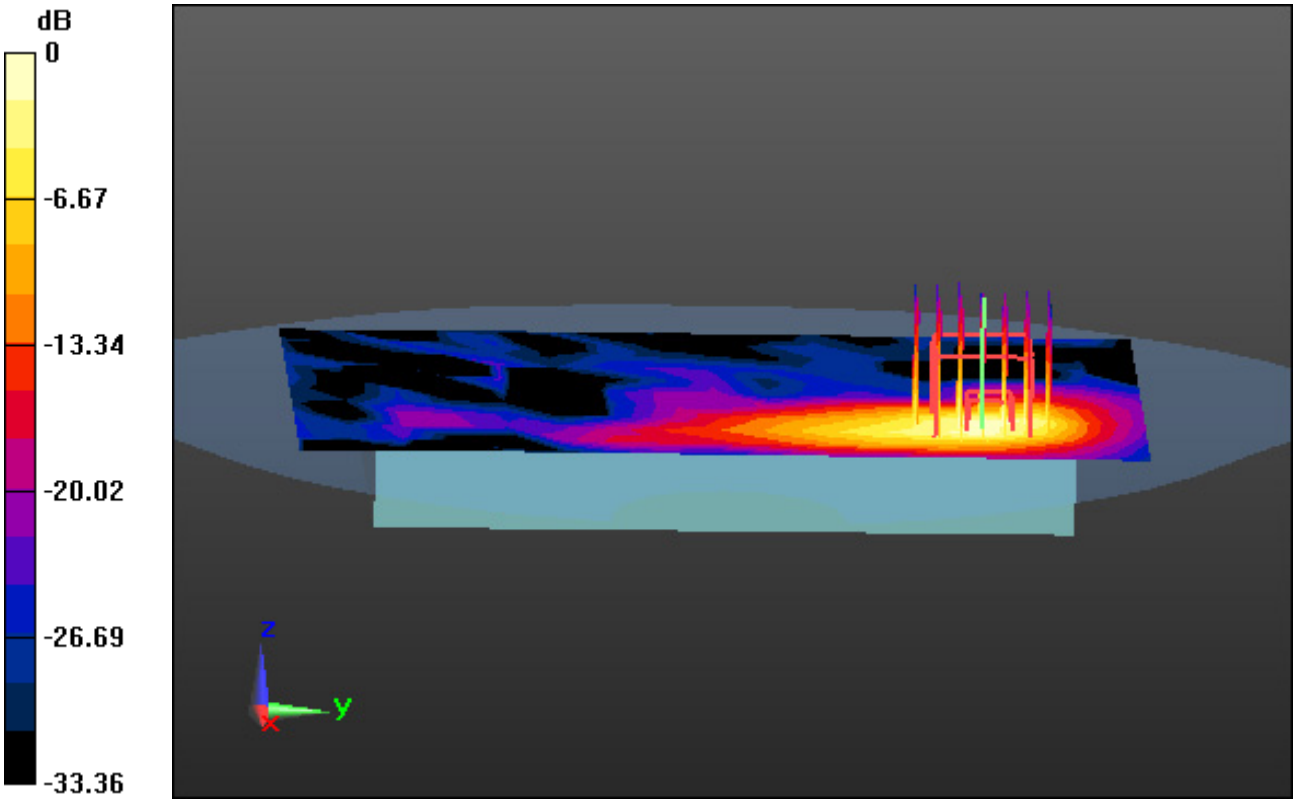


0 dB = 0.310 W/kg

# DT&C Co., Ltd.

## DUT: PM85; Type: Bar

Communication System: UID 0, W-LAN_5300 (0); Frequency: 5300 MHz;Duty Cycle: 1:1
Medium parameters used: f = 5300 MHz; $\sigma$ = 5.622 S/m; $\varepsilon_r$ = 49.689; $\rho$ = 1000 kg/m$^3$
Phantom section: Flat Section

**DASY5 Configuration:**
Probe: EX3DV4 - SN3866; ConvF(4.5, 4.5, 4.5); Calibrated: 5/31/2018; Electronics: DAE4 Sn1391
Sensor-Surface: 1.4mm (Mechanical Surface Detection)
Phantom: SAM with CRP_2016_07_22_middle; Type: QD000P40CD; Serial: TP:1786
Measurement SW: DASY52, Version 52.8 (8); SEMCAD X Version 14.6.10 (7331)

Test Date: 2019-02-04; Ambient Temp: 20.3; Tissue Temp: 21.0

## Touch from Body, Top, WLAN(802.11a) Ch. 60, Ant Internal

**Area Scan (11x15x1):** Measurement grid: dx=10mm, dy=10mm
**Zoom Scan (8x9x7)/Cube 0:** Measurement grid: dx=4mm, dy=4mm, dz=1.4mm, Graded Ratio: 1.4
Power Drift = -0.03 dB
Peak SAR (extrapolated) = 8.54 W/kg
**SAR(1 g) = 1.64 W/kg; SAR(10 g) = 0.391 W/kg**

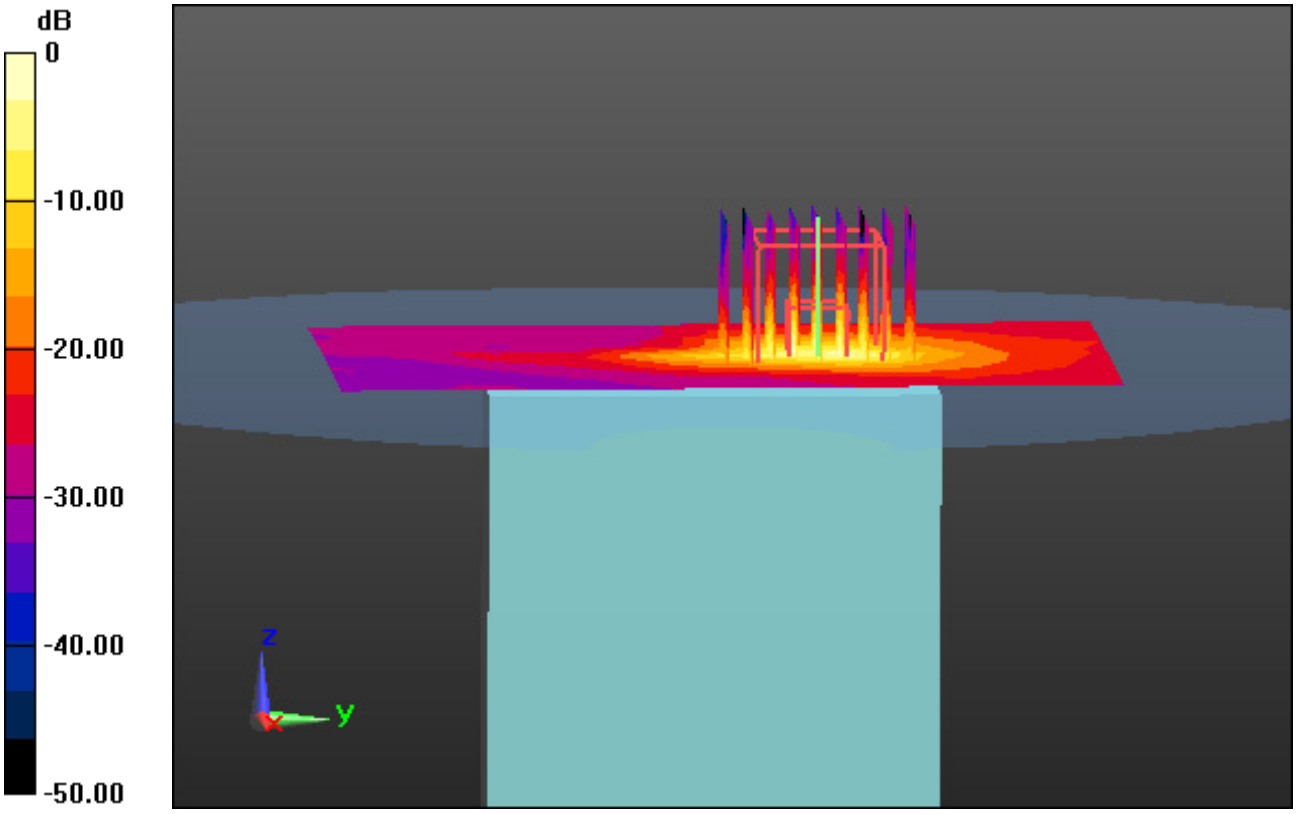


0 dB = 4.42 W/kg

# DT&C Co., Ltd.

## DUT: PM85; Type: Bar

Communication System: UID 0, W-LAN 5G (0); Frequency: 5700 MHz;Duty Cycle: 1:1
Medium parameters used: f = 5700 MHz; $\sigma$ = 5.998 S/m; $\varepsilon_r$ = 46.91; $\rho$ = 1000 kg/m$^3$
Phantom section: Flat Section

**DASY5 Configuration:**
Probe: EX3DV4 - SN3866; ConvF(3.87, 3.87, 3.87); Calibrated: 5/31/2018; Electronics: DAE4 Sn1391
Sensor-Surface: 1.4mm (Mechanical Surface Detection)
Phantom: SAM with CRP_2016_07_22_middle; Type: QD000P40CD; Serial: TP:1786
Measurement SW: DASY52, Version 52.8 (8); SEMCAD X Version 14.6.10 (7331)

Test Date: 2019-02-05; Ambient Temp: 20.1; Tissue Temp: 21.0

## Touch from Body, Top, WLAN(802.11a) Ch. 140, Ant Internal

**Area Scan (11x15x1):** Measurement grid: dx=10mm, dy=10mm
**Zoom Scan (9x9x7)/Cube 0:** Measurement grid: dx=4mm, dy=4mm, dz=1.4mm, Graded Ratio: 1.4
Power Drift = -0.12 dB
Peak SAR (extrapolated) = 10.2 W/kg
**SAR(1 g) = 1.87 W/kg; SAR(10 g) = 0.473 W/kg**

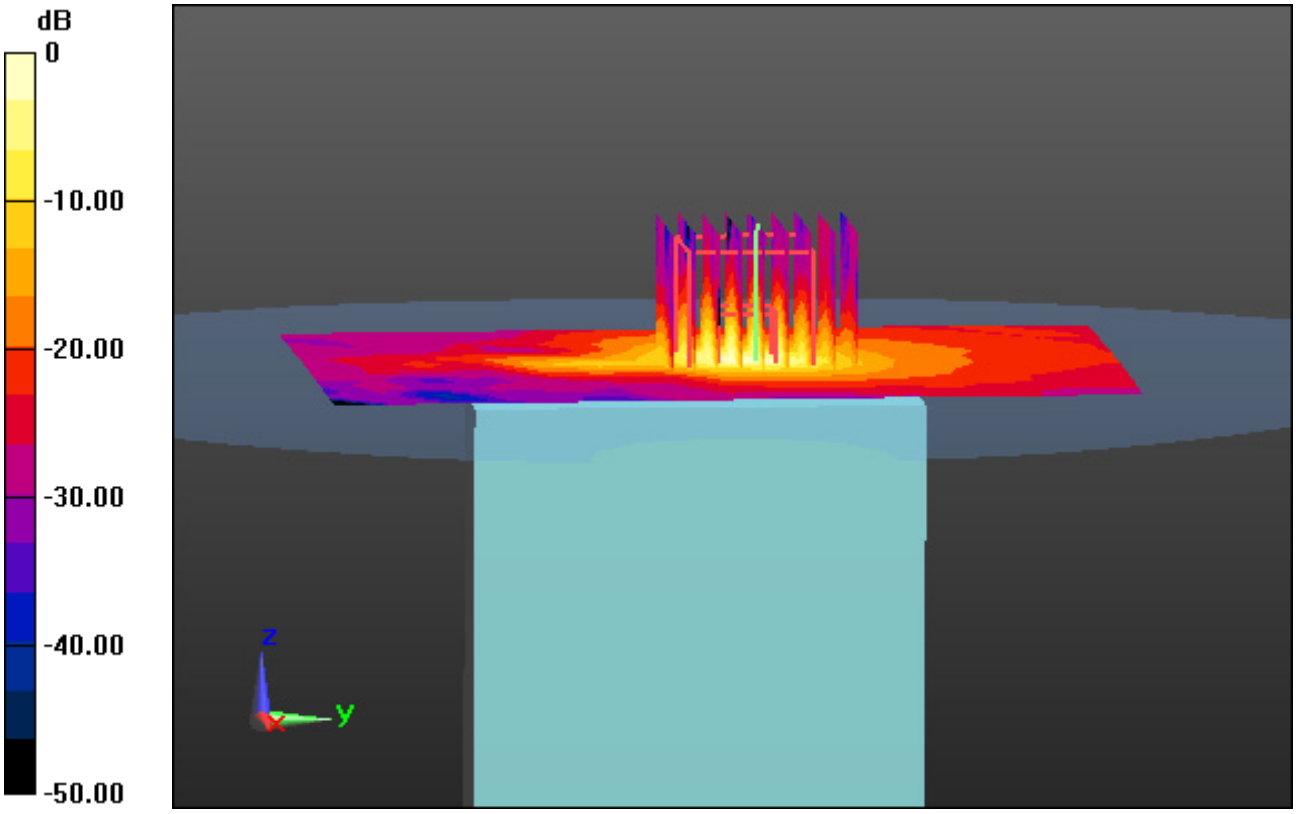


0 dB = 5.02 W/kg

# DT&C Co., Ltd.

## DUT: PM85; Type: Bar

Communication System: UID 0, W-LAN 5G (0); Frequency: 5745 MHz;Duty Cycle: 1:1
Medium parameters used: f = 5745 MHz; $\sigma$ = 5.989 S/m; $\varepsilon_r$ = 46.883; $\rho$ = 1000 kg/m$^3$
Phantom section: Flat Section

**DASY5 Configuration:**
Probe: EX3DV4 - SN3866; ConvF(4.16, 4.16, 4.16); Calibrated: 5/31/2018; Electronics: DAE4 Sn1391
Sensor-Surface: 1.4mm (Mechanical Surface Detection)
Phantom: SAM with CRP_2016_07_22_middle; Type: QD000P40CD; Serial: TP:1786
Measurement SW: DASY52, Version 52.8 (8); SEMCAD X Version 14.6.10 (7331)

Test Date: 2019-02-06; Ambient Temp: 20.2; Tissue Temp: 20.9

## Touch from Body, Top, WLAN(802.11a) Ch. 149, Ant Internal

**Area Scan (11x15x1):** Measurement grid: dx=10mm, dy=10mm
**Zoom Scan (9x9x7)/Cube 0:** Measurement grid: dx=4mm, dy=4mm, dz=1.4mm, Graded Ratio: 1.4
Power Drift = -0.13 dB
Peak SAR (extrapolated) = 10.4 W/kg
**SAR(1 g) = 1.89 W/kg; SAR(10 g) = 0.479 W/kg**

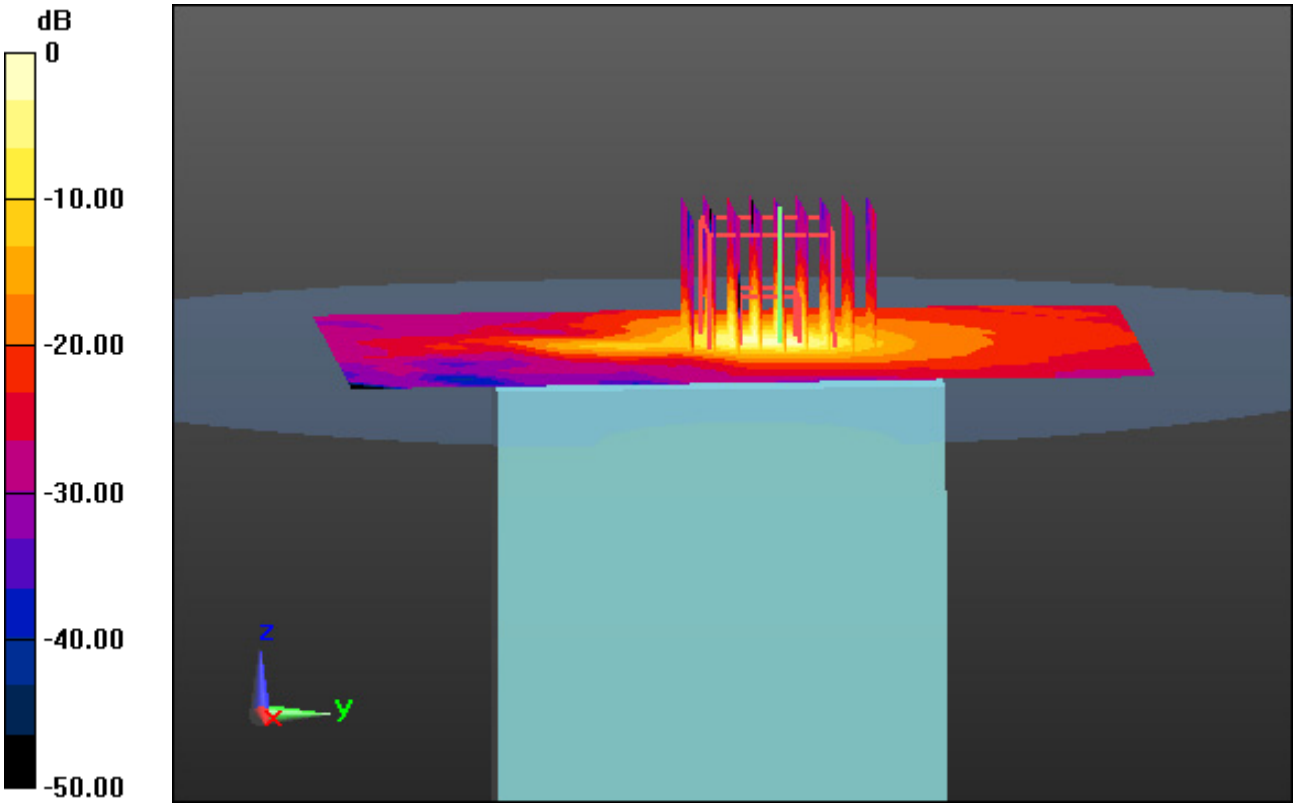


0 dB = 5.08 W/kg