For Android™ 13

Enterprise Mobility

PM95

User Manual

Copyright © 2024.
Point Mobile Co., Ltd. All rights reserved

Google, Android, Google Play and other marks are trademarks of Google LLC.

Instruction

This manual provides information about basic features and using the PM95. Please read this manual carefully before using your device and peripherals to ensure safe and proper use.

Note: *Screenshots in this manual may differ from actual screens.*

Revision History

Revision	Date	Description
v1.0	17 Jan 2024	Initial release
v2.0	21 Feb 2024	Added Smart Charging description Updated SKU list and Check Device Health (EmHealthReport) items
v3.0	12 Mar 2024	Updated Accessories chapter
v4.0	21 Mar 2024	Updated Smart Charging description Changed back cover (Updated company address)

© 2024 Point Mobile Co., Ltd. All rights reserved

Introduction

PM95 SKUs

The contents of this manual can cover the following SKUs.

<table>
<tr><th>Type</th><th>Part Number</th><th>Scanner</th><th>Battery</th><th>Payment</th><th>Network</th><th>RAM /Flash</th><th>Common</th></tr>
<tr><td rowspan="4">Scanner SKU</td><td>PM95E31031NE06</td><td rowspan="6">N5703</td><td>Standard</td><td rowspan="4">-</td><td rowspan="2">WiFi/BT</td><td rowspan="5">6G/64G</td><td rowspan="7">NFC

Front/Rear Camera

Android GMS 13</td></tr>
<tr><td>PM95E31041NE06</td><td>Extended</td></tr>
<tr><td>PM95EL1031NE06</td><td>Standard</td><td rowspan="5">5G NR, GPS, WiFi/BT</td></tr>
<tr><td>PM95EL1041NE06</td><td>Extended</td></tr>
<tr><td rowspan="2">MSR/ICCR SKU</td><td>PM95EM1031NE06</td><td>Standard</td><td rowspan="2">MSR/ICCR</td></tr>
<tr><td>PM95EM1041NE06</td><td>Extended</td></tr>
<tr><td rowspan="2">Non-Scanner SKU</td><td>PM95EL003FNE06</td><td rowspan="2">-</td><td>Standard</td><td rowspan="2">-</td><td rowspan="2">8G/128G</td></tr>
<tr><td>PM95EL004FNE06</td><td>Extended</td></tr>
</table>

© 2024 Point Mobile Co., Ltd. All rights reserved

Table of Contents

INSTRUCTION 1

Revision History 1

PM95 SKUs 2

GETTING STARTED 6

Device Parts 6

Product Standard Accessories 12

Install SD & SIM cards 13

Install & Remove Battery 18

Charge the Device 21

LED Indicator 25

Turn On / Off the Device 26

Use a Touch Screen 27

LEARNING THE BASICS 30

Setup Wizard 30

Home Screen 31

Call 40

Contacts 43

Message 45

MTP Connection with PC 46

Manage the Files 47

Lock the Screen 49

Settings 50

USING THE BUTTONS 52

Screenshot 52

Program Buttons 52

© 2024 Point Mobile Co., Ltd. All rights reserved

Table of Contents

CAMERA 53

SCANNER 54

Turn on / off the Scanner 54

ScanSettings 55

Scan a Barcode 64

ScanDemo 65

WIRELESS 66

Mobile Network 66

Wi-Fi 67

Bluetooth 68

BLE Beacon 70

NFC 71

RFID 73

PAYMENT 74

Magnetic Stripe Card 74

IC Card (Smart Card) 75

Contactless Payment 76

SYSTEM MAINTENANCE 77

System Information 77

Check Device Health 78

OS Update 79

Factory Data Reset 82

ACCESSORIES 84

Hand Strap & Wrist band 84

Rugged boot 87

© 2024 Point Mobile Co., Ltd. All rights reserved

Table of Contents

Gun Handle 88
RF88 (RFID Reader) 90
Charging cradle 91

SAFETY INFORMATION 93

Battery Safety Information 93

© 2024 Point Mobile Co., Ltd. All rights reserved

Getting Started

Device Parts

Scanner SKU

Figure 1 PM95 Scanner SKU: front + left view

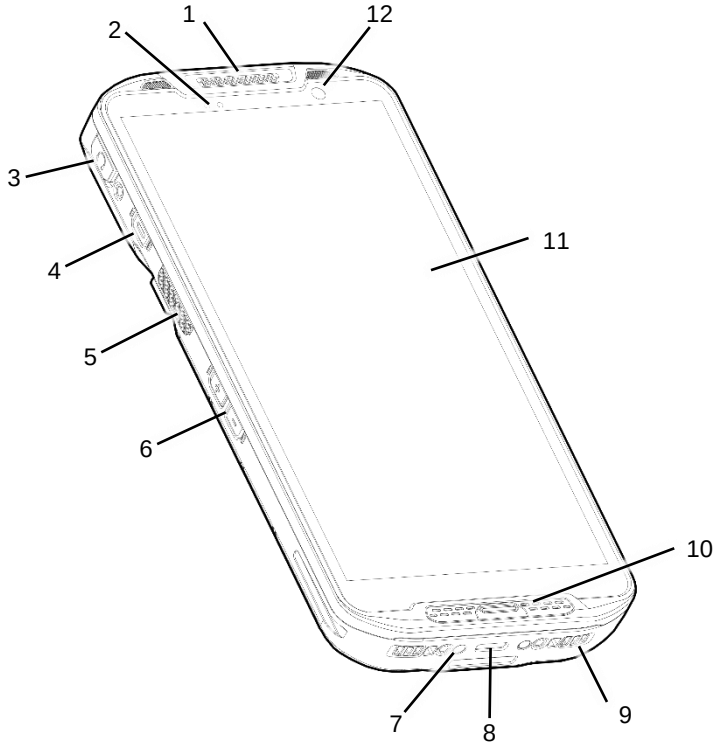

No	Name	Description
1	Receiver	Use with making a phone call
2	LED indicator	Indicate the power status and notification. Refer to LED indicator.
3	Audio jack with cap	Connect headset and the jack is protected by the cap
4	Power button	Turn on/off the device
5	Scan button (Left)	Scan a barcode by pressing (Programmable button)
6	Volume buttons	Control the volume (Programmable button)
7	I/O connector for cradle	Connector for charging and communication with cradle
8	USB connector	USB Type C connector for charging and data communication
9	Speaker	Ring system sound
10	Microphone	Use for collecting sound
11	Touch screen	Displays all operating screen
12	Front camera	Take a picture

© 2024 Point Mobile Co., Ltd. All rights reserved

Getting Started

Figure 2 PM95 Scanner SKU: rear + right view

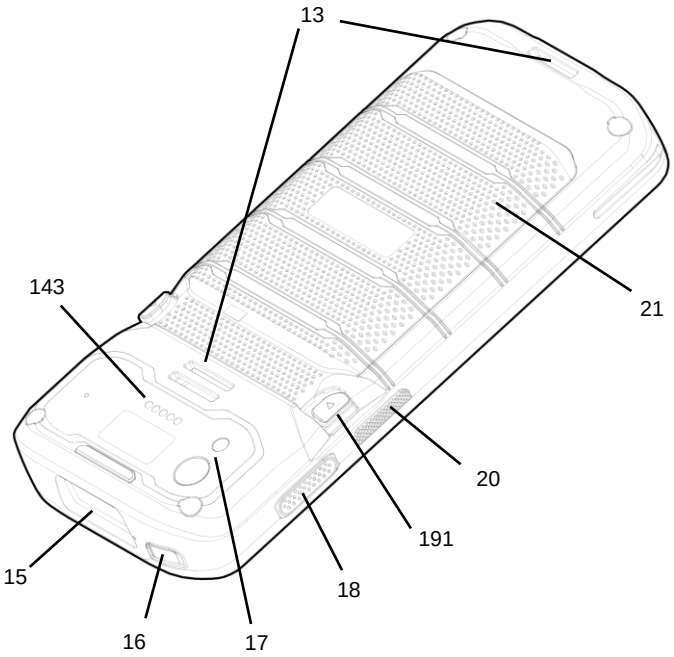

No	Name	Description
13	Hand strap hole (top / bottom)	Mount a hand strap
14	Rear I/O connector	Connector for sled type accessories' sled bracket
15	Scanner	Scan a barcode
16	Emergency button	Perform emergency process
17	Rear camera & Flashlight	Take a picture & Use flashlight in camera or torch mode
18	Push-To-Talk button	Use PTT function by pressing (Programmable button)
19	Battery release button	Press the buttons in to release the battery
20	Scan button (Right)	Scan a barcode by pressing (Programmable button)
21	Battery	Provide power (battery and battery cover are combined)

© 2024 Point Mobile Co., Ltd. All rights reserved

Getting Started

Non-Scanner SKU

Figure 3 PM95 Non-Scanner SKU: front + left view

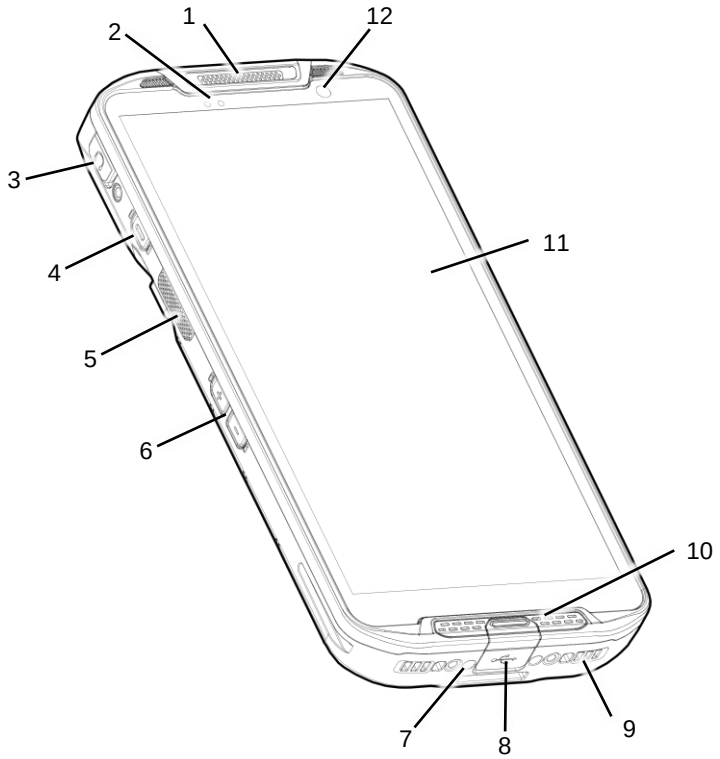

No	Name	Description
1	Receiver	Use with making a phone call
2	LED indicator	Indicate the power status and notification. Refer to LED indicator.
3	Audio jack with cap	Connect headset and the jack is protected by the cap
4	Power button	Turn on/off the device
5	Scan button (Left)	Scan a barcode by pressing (Programmable button)
6	Volume buttons	Control the volume (Programmable button)
7	I/O connector for cradle	Connector for charging and communication with cradle
8	USB connector with cap	USB Type C connector for charging and data communication and the connector is protected by the cap
9	Speaker	Ring system sound
10	Microphone	Use for collecting sound
11	Touch screen	Displays all operating screen
12	Front camera	Take a picture

© 2024 Point Mobile Co., Ltd. All rights reserved

Getting Started

Figure 4 PM95 Non-Scanner SKU: rear + right view

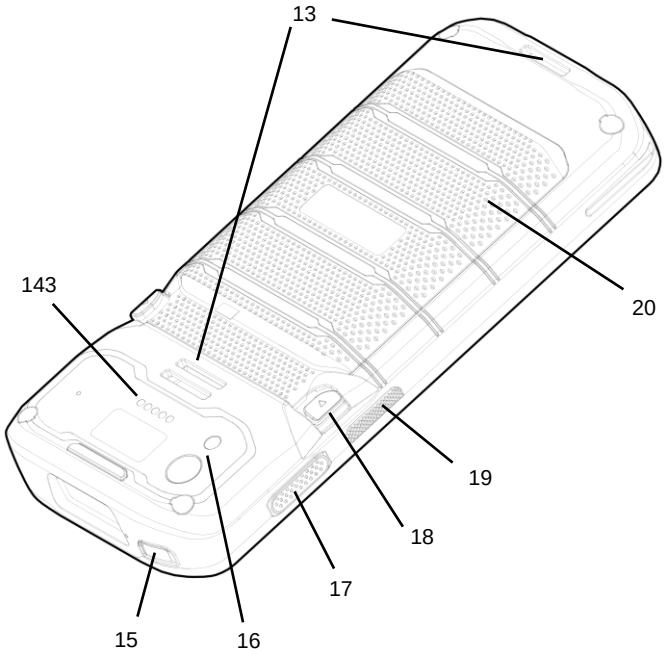

No	Name	Description
13	Hand strap hole (top / bottom)	Mount a hand strap
14	Rear I/O connector	Connector for sled type accessories' sled bracket
15	Emergency button	Perform emergency process
16	Rear camera & Flashlight	Take a picture & Use flashlight in camera or torch mode
17	Push-To-Talk button	Use PTT function by pressing (Programmable button)
18	Battery release button	Press the buttons in to release the battery
19	Scan button (Right)	Scan a barcode by pressing (Programmable button)
20	Battery	Provide power (battery and battery cover are combined)

© 2024 Point Mobile Co., Ltd. All rights reserved

Getting Started

MSR/ICCR SKU

Figure 5 PM95 MSR/ICCR SKU: front + left view

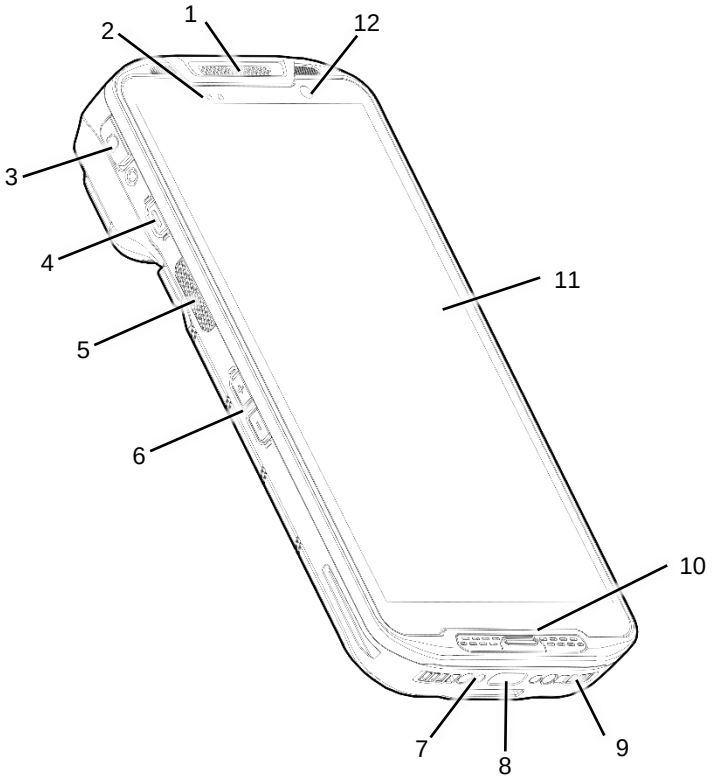

No	Name	Description
1	Receiver	Use with making a phone call
2	LED indicator	Indicate the power status and notification. Refer to LED indicator.
3	Audio jack with cap	Connect headset and the jack is protected by the cap
4	Power button	Turn on/off the device
5	Scan button (Left)	Scan a barcode by pressing (Programmable button)
6	Volume buttons	Control the volume (Programmable button)
7	I/O connector for cradle	Connector for charging and communication with cradle
8	USB connector	USB Type C connector for charging and data communication
9	Speaker	Ring system sound
10	Microphone	Use for collecting sound
11	Touch screen	Displays all operating screen
12	Front camera	Take a picture

© 2024 Point Mobile Co., Ltd. All rights reserved

Getting Started

Figure 6 PM95 MSR/ICCR SKU: rear + right view

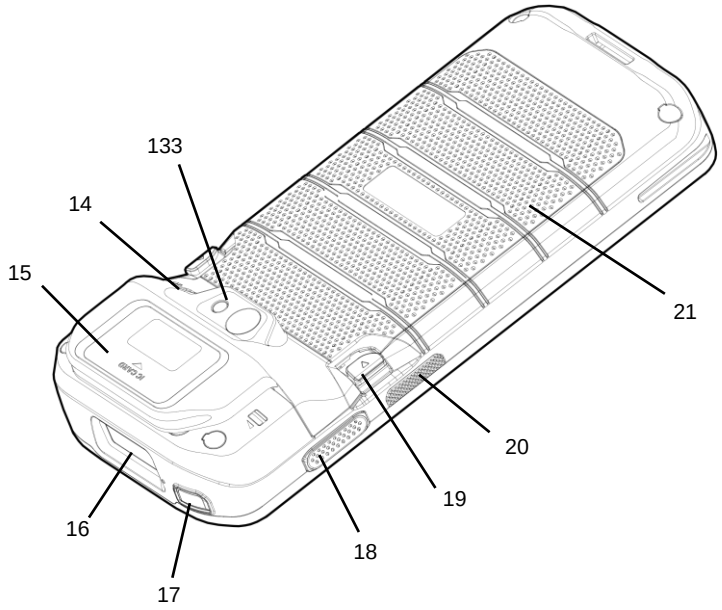

No	Name	Description
13	Rear camera & Flashlight	Take a picture & Use flashlight in camera or torch mode
14	Wrist band hole	Mount a wrist band
15	MSR / ICCR	Slide or Insert a card to perform a payment (Refer to Payment chapter)
16	Scanner	Scan a barcode
17	Emergency button	Perform emergency process
18	Push-To-Talk button	Use PTT function by pressing (Programmable button)
19	Battery release button	Press the buttons in to release the battery
20	Scan button (Right)	Scan a barcode by pressing (Programmable button)
21	Battery	Provide power (battery and battery cover are combined)

© 2024 Point Mobile Co., Ltd. All rights reserved

Getting Started

Product Standard Accessories

The following items are in the product box.

Accessory	Name
	Battery pack 95-BTSC : 4,950 mAh, 3.87 V 95-BTEC : 7,020 mAh, 3.87 V
	Charger
	AC plug
	LCD protection film
or	Hand strap or Wrist band

Note: *The images may differ from the actual accessory.*

© 2024 Point Mobile Co., Ltd. All rights reserved

Getting Started

Install SD & SIM cards

PM95 supports

- microSD card
- nano-SIM card – WWAN SKU only

You can find the card slots when removing the battery. Depending on SKU, the equipped card slots are different. Refer to the following table.

Figure 7 PM95 Card Slots

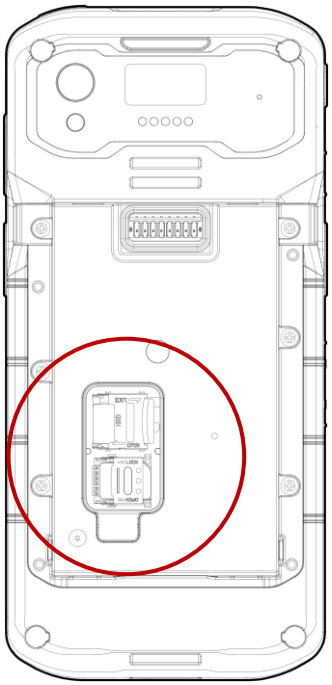

WLAN SKU	WWAN SKU
	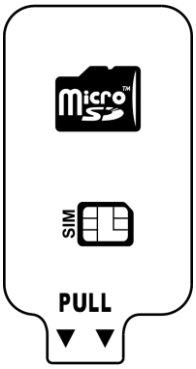

© 2024 Point Mobile Co., Ltd. All rights reserved

Getting Started

Card slot cover

You must open the card slot cover to install or remove the cards. The slot cover protects the device from water, dust, etc.

To open the cover, pull it out using the handle on the bottom side.

After installing or removing cards, place the cover on the card slot(s) and push the edge to close firmly.

Notice: *Do not throw away the cover. It affects device sealing performance against water, dust, etc.*

Figure 8 Card slot cover

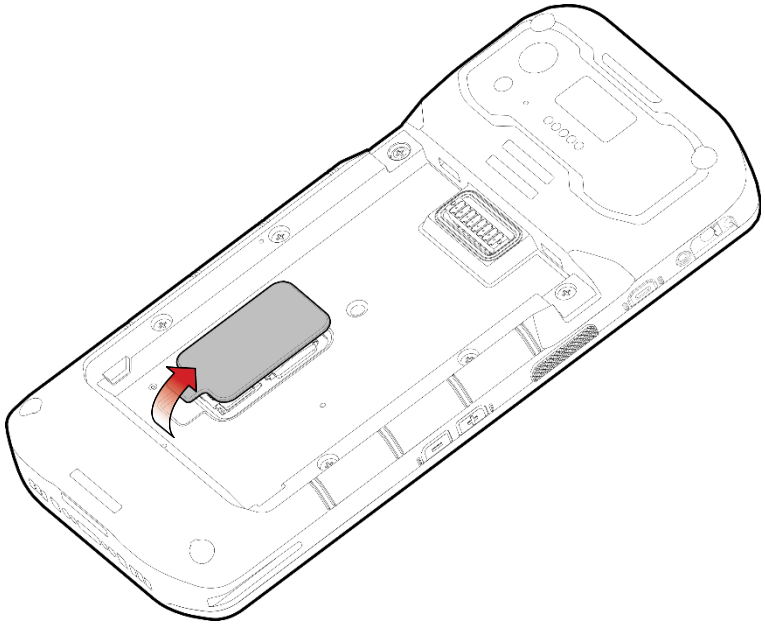

© 2024 Point Mobile Co., Ltd. All rights reserved

Getting Started

Install SD card

1. Remove the battery and open the card slot cover.
2. Gently slide the cardholder **left**, and swing upwards to open the holder.

Figure 9 Open SD cardholder

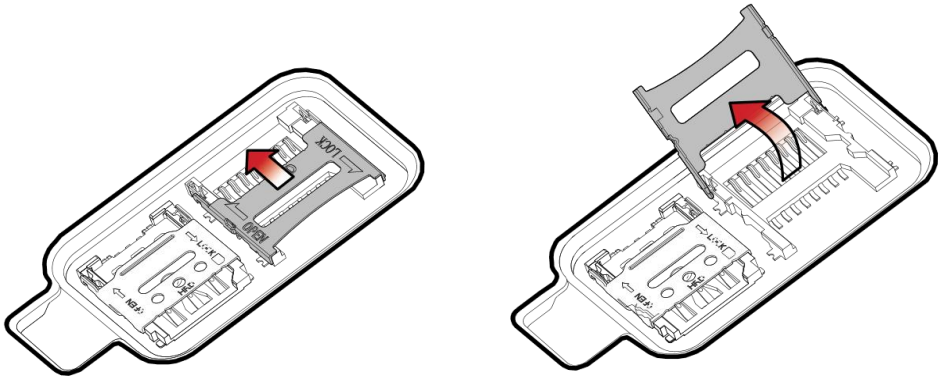

3. Put the SD card you prepared with the contacts facing down.

Figure 10 Place SD card

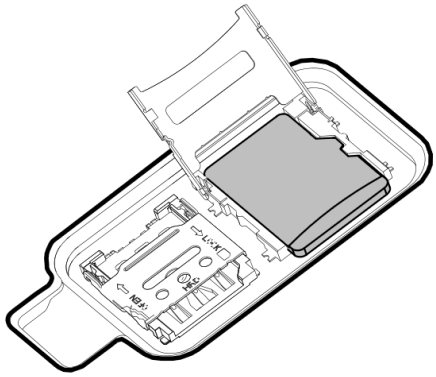

4. Close the holder down and gently slide it right to lock the holder.

Figure 11 Close SD cardholder

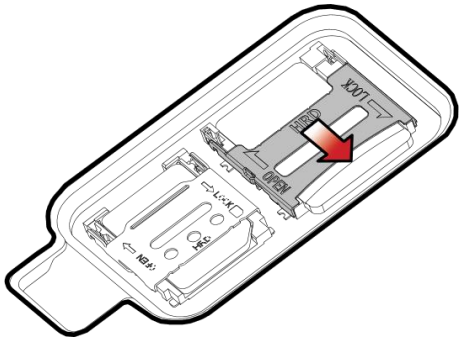

5. Close the card slot cover firmly.

© 2024 Point Mobile Co., Ltd. All rights reserved

Getting Started

Install nano-SIM card

1. Remove the battery and open the card slot cover.
2. Gently slide the cardholder **left**, and swing upwards to open the holder.

Figure 12 Open SIM cardholder

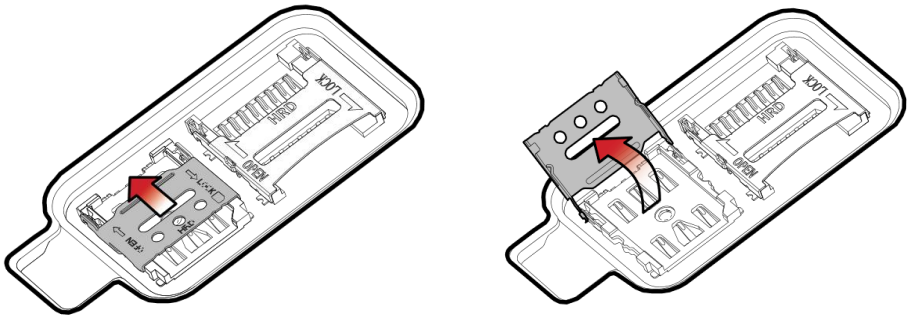

3. Put a nano-SIM card you prepared with the contacts facing down.

Figure 13 Place SIM card

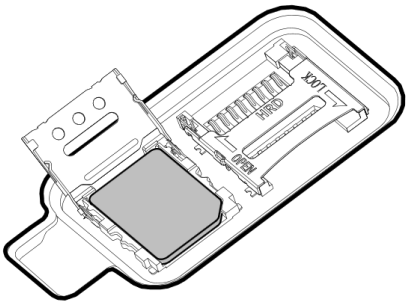

4. Close the holder down and gently slide it right to lock the holder.

Figure 14 Closed SIM cardholder

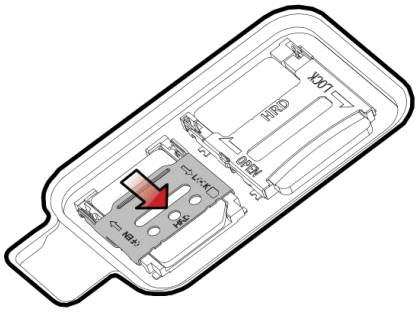

5. Close the card slot cover firmly.

© 2024 Point Mobile Co., Ltd. All rights reserved

Getting Started

Install eSIM

1. Connect a Wi-Fi network.
2. Go to **Settings** > **Network & internet**, and tap **SIMs** or **+**.
3. Tap **Download a new eSIM**.
4. Download an eSIM by following the instructions. If you get a QR code from a network provider, scan the QR code.
5. From the SIMs screen, select the downloaded SIM and turn on the **Use SIM** switch.

Notice: *Depending on the network provider, eSIM or the network service may not be supported.*

© 2024 Point Mobile Co., Ltd. All rights reserved

Getting Started

Install & Remove Battery

Install the battery

Caution: *Make sure the cardholders are completely closed before installing the battery.*
It may damage the device if you force to install the battery while the cardholders are not closed.

1. Insert the battery from the bottom side.

Figure 15 Installing battery – 1

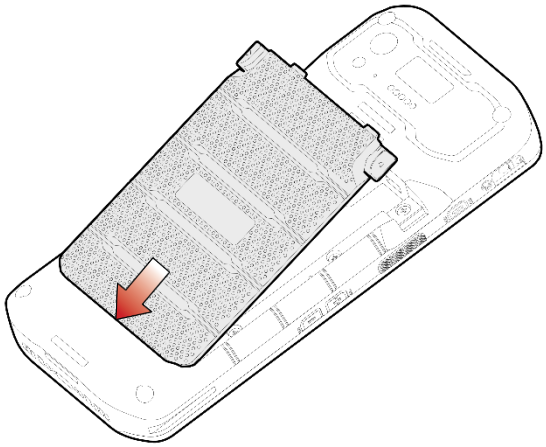

2. Push the battery down until it clicks.
   Confirm that the battery release buttons are completely outward and the bottom side is fully engaged.

Figure 16 Installing battery – 2

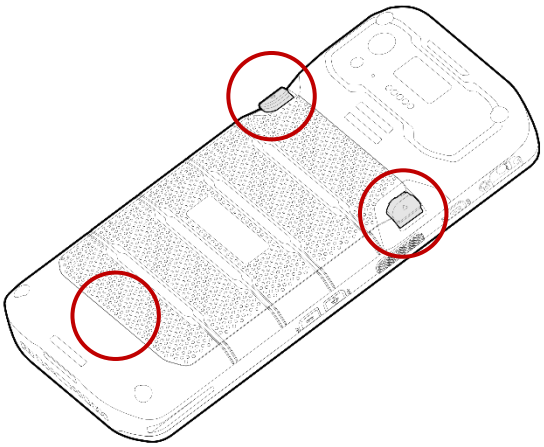

© 2024 Point Mobile Co., Ltd. All rights reserved

Getting Started

Remove the battery

1. Hold the battery release buttons and press in.

Figure 17 Removing battery – 1

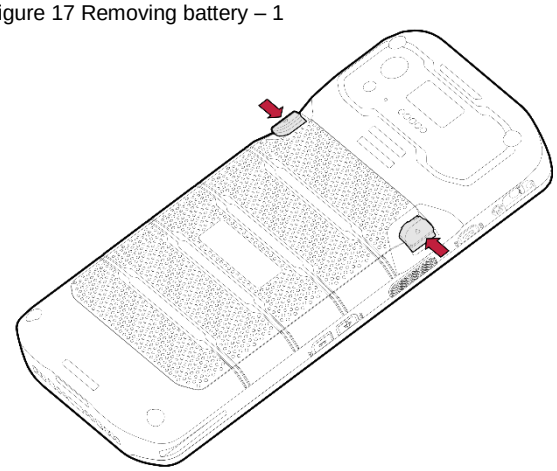

2. While pressing the battery release buttons in, pull the battery up.

Figure 18 Removing battery – 2

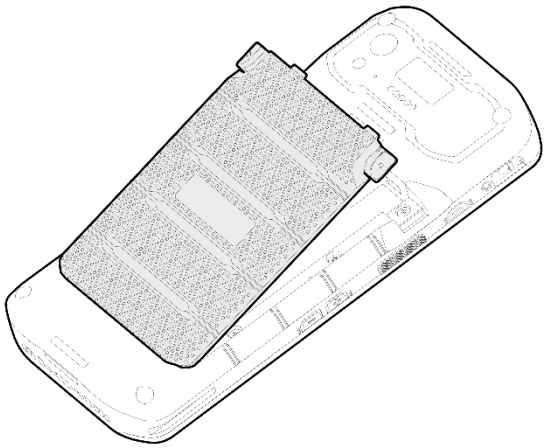

© 2024 Point Mobile Co., Ltd. All rights reserved

Getting Started

Battery hot swap

Battery hot swap is a feature that allows users to replace the battery without powering off.
PM95 supports two types of hot swap mode, Enterprise Hot Swap, and Legacy hot swap. Basically, the device enters Enterprise Hot Swap mode. You can change the preferred hot swap mode in EmSettings.

Enterprise Hot Swap

Enterprise hot swap allows the device to maintain Wi-Fi/Bluetooth connectivity and memory persistence even when detaching the battery. Users can earn time to replace the battery without stopping the ongoing task or disconnecting the Bluetooth devices.

But, as the backup battery with a smaller capacity than the main battery takes over to maintain the system, users are highly recommended to replace the battery within 30 seconds (30 seconds countdown displays). And some mitigations are activated to conserve power consumption.

- Reducing display brightness to about 10%
- Disabling NFC, Scanner
- Lowering sound volume

Once the user replaces the battery with a charged one, the device will come back to normal operation mode without booting process.

Notice: *Do not change any settings or perform actions that may increase power consumption for device stability.*

Legacy hot swap

When the battery is removed from the device, the display turns off, the device enters Hot swap mode and waits for battery replacement.

Once you replace the battery to a new one, the device will come back to normal operation mode without booting process.

© 2024 Point Mobile Co., Ltd. All rights reserved

Getting Started

Charge the Device

Before using PM95, charge the device enough to use. PM95 can be charged with power adapter or charging cradle. For best charging performance and safety, follow the normal charging temperature.

Caution: *Always use an original charger and cable from Point Mobile. Other chargers and cables may damage PM95. Also, make sure the charger and cables are not wet.*

Follow the Battery Safety Information *for safety of using the battery.*

Battery specification

- Typical capacity:
  - Standard battery: 4,950mAh
  - Extended battery: 7,020mAh
- Rechargeable & Removable battery

Charging temperature

Charge devices and batteries in temperatures from 0 ℃ to 45 ℃. At out-of-normal range temperatures, the PM95 may stop charging for safety, and the power LED blinks red.

© 2024 Point Mobile Co., Ltd. All rights reserved

Getting Started

Smart Charging

PM95 supports three charging modes to provide optimal battery performance for your work.

- **Life-X mode (Default)**
  - An optimized charging mode that improves the battery's lifespan and stability.

- **Normal mode**
  - A typical charging mode.

- **Fast charging mode**
  - A charging mode that charges the battery faster than the other modes.

To change the smart charging mode, go to **Settings** > **Battery** or **EmKit** > **EmSettings**, and select **Smart Charging**.

Figure 19 Smart Charging

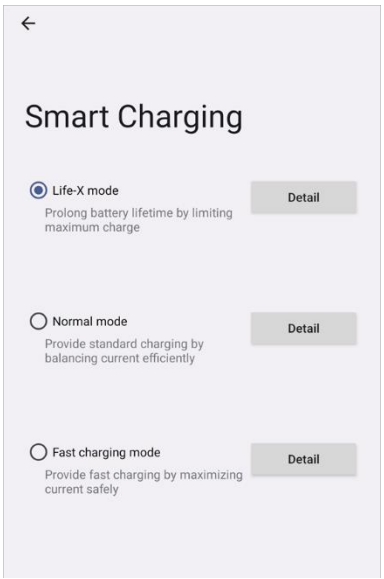

© 2024 Point Mobile Co., Ltd. All rights reserved

Getting Started

Charge with power adapter

1. Assemble the proper country plug and charger, and rotate the plug clockwise to engage firmly.
2. (Non-scanner SKU only) Open the USB connector's cover cap on the PM95.

Figure 20 (Non-scanner SKU) Open USB connector cap

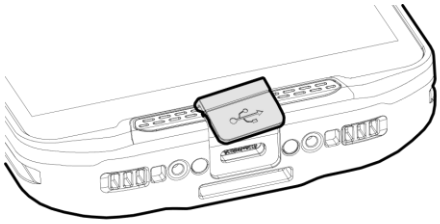

3. Connect the cable to the USB connector on the right side of PM95.
4. Provide power by plugging the power adapter to the wall socket.

Figure 21 PM95 charging with power adapter

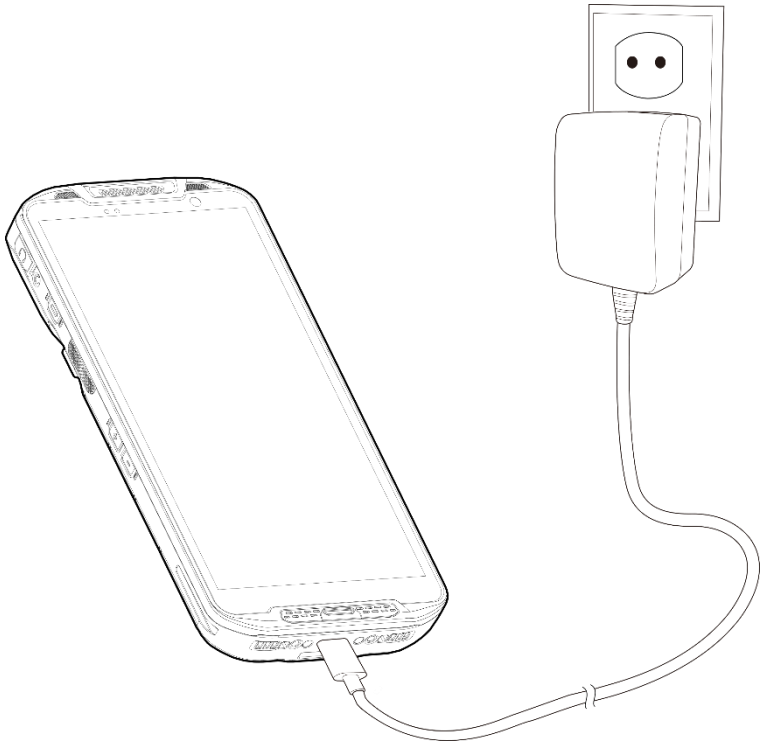

© 2024 Point Mobile Co., Ltd. All rights reserved

Getting Started

Charging Cradle

There are two types of charging cradle for PM95. Single slot (ethernet) cradle (SSC / SEC), 4 slot battery cradle (4SBC). The cradles are sold separately.

Single Slot Cradle (SSC) / Single Slot Ethernet Cradle (SEC)

SSC and SEC provide one PM95 charging slot and one PM95 battery charging slot.

4 Slot Battery Cradle (4SBC)

4SBC can charge up to 4 pieces of PM95 batteries at the same time.

Note: *SSC/SEC and 4SBC are compatible with PM84.*

© 2024 Point Mobile Co., Ltd. All rights reserved

Getting Started

LED Indicator

PM95 has 2 LED indicators above the screen.

Figure 22 PM95 LED indicators

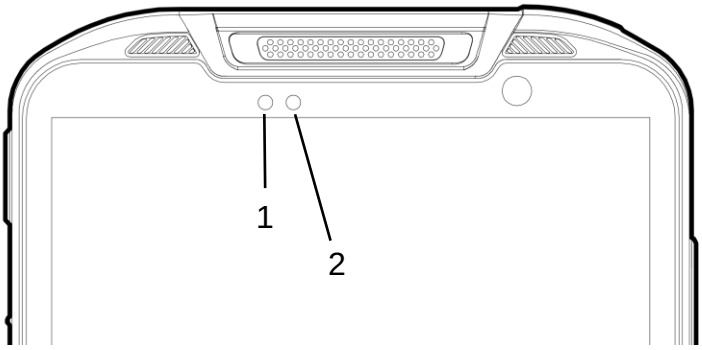

No	Indicator	Status	Indication
1	Power LED	Solid green	Device is completely charged
		Solid red	Device is charging / Battery is low
		Blinking red	Charging temperature is out-of-normal range (Refer to Charging temperature) / Battery is very low
		Alternately blinking red & green	Cannot recognize the battery
2	Notification LED	Blinking blue	Notification existing
		Red flash	Barcode reading failed
		Blue flash	Barcode reading success

© 2024 Point Mobile Co., Ltd. All rights reserved

Getting Started

Turn On / Off the Device

To turn on the device,

- Press and hold the power button on the left side of the device until **SMART BEYOND RUGGED** logo displays on the screen.

Figure 23 PM95 power button

To turn off the device,

- Press and hold the power button when the display is on until the power menu is shown. Then, tap **Power off**.

Figure 24 Power menu - Power off

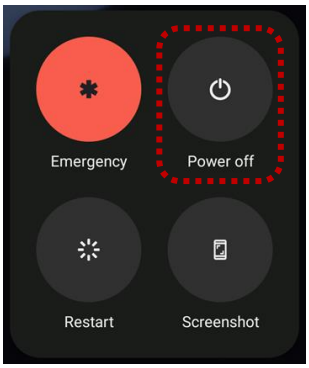

© 2024 Point Mobile Co., Ltd. All rights reserved

Getting Started

Use a Touch Screen

Controlling the touch screen

Gesture	Description
	Tap One-finger press
	Long-press One-finger press, wait, lift for select action
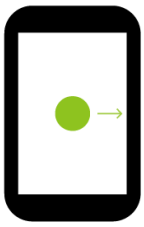	**Drag, Swipe, or Fling** One-finger press, move, lift for scroll or tilt action
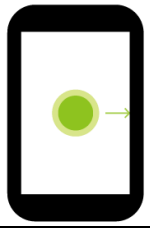	**Long-press drag** One-finger press, wait, move, lift for pick up and move, or select multiple items action
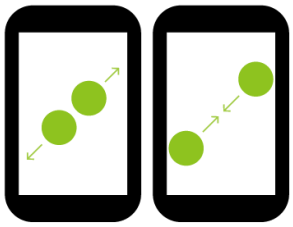	**Pinch Open & Close** Two-finger press, move outwards and inwards, lift for **zoom in / out** action
	Rotate When PM95 is turning sideways, **screen orientation is changing**

© 2024 Point Mobile Co., Ltd. All rights reserved

Getting Started

System navigation

Navigation bar (Software button)

The navigation bar is enabled as a default, and it is located at the bottom of the screen. The app overview button, home button, and back button are placed on the bar in order.

Figure 25 Navigation bar

Shape	Button	Function
◀	Back button	Tap to go back to previous screen.
●	Home button	Tap to go to home screen. Long-press to launch the Google Assistant.
■	Recent apps button	Tap to see the recently used app list.

© 2024 Point Mobile Co., Ltd. All rights reserved

Getting Started

Gesture Navigation

If you are unfamiliar with the navigation bar or you want to see the screen with a wider screen, hide the navigation bar. The functions provided by the software buttons on the navigation bar can be used by using specific gestures.

To hide the navigation bar, navigate to **Setting** **> System > Gestures > System navigation** and change the setting to **Gesture navigation**. Then, the navigation bar will be hidden.

Note: *To use the navigation bar again, change the setting to* ***3-button navigation****.*

Find the gestures and matched function in the table below.

Figure 26 Gesture navigation

Function	Gesture
Open recent apps screen	Swipe up from the bottom of the screen, hold, then release.
Go to home screen	Swipe up from the center-bottom of the screen.
Back to previous screen	Swipe from the left or right edge of the screen.
Launch Google Assistant	Swipe up from either the left-bottom or right-bottom.

© 2024 Point Mobile Co., Ltd. All rights reserved

Learning the Basics

Setup Wizard

When PM95 starts very first time or boot after factory reset, Setup Wizard is launched. Following the steps on the screen, set system language, Google account, Wi-Fi connection and copy the data, etc.

Some settings can be skipped, but there may be some restrictions on the use of the system.

Figure 27 Setup Wizard (main)

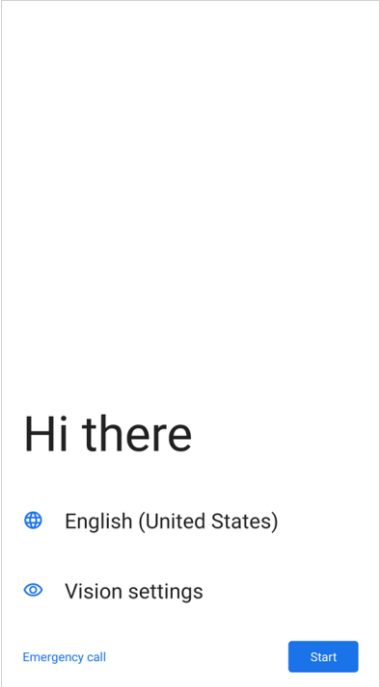

Figure 28 Setup Wizard (Google account)

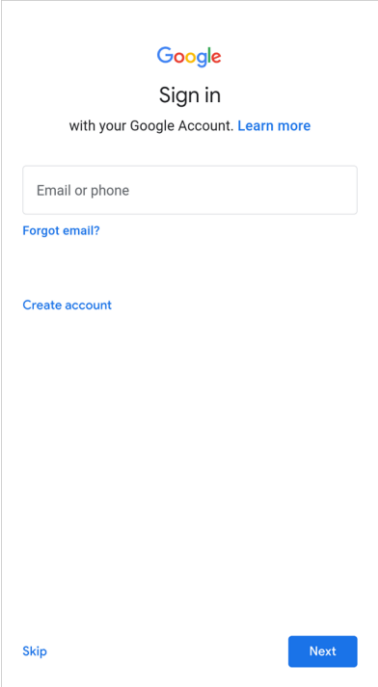

© 2024 Point Mobile Co., Ltd. All rights reserved

Learning the Basics

Home Screen

Home screen is a screen displayed after Setup Wizard or pressing the Home button.

Figure 29 Home screen

No	Item	Description
1	Status bar	Indicates device status and notification.
2	Google search	Search an item with Google.
3	App	Tap to run the application. Long-press to see the application's options.
4	Favorites tray	Place the frequently used apps.
5	App folder	Apps are organized in the folder. Tap to open the App folder.

© 2024 Point Mobile Co., Ltd. All rights reserved

Learning the Basics

Status bar

Time, status icons, and notification icons are on the Status bar.

Status icons

Icon	Description	Icon	Description
5G	5G connected	LTE	LTE connected
3G	3G connected		Strong signal
LTE+	LTE+ (LTE CA) connected		Weak signal
E	EDGE connected		Connection issue
HD	VoLTE enabled		Data disabled
	Hotspot enabled		No data connection
	Connected to a Bluetooth device		Airplane mode
	Connected to a Wi-Fi network		Data communication
	Battery is full		Battery is low
	Battery is critical low		Cannot recognize battery
	Battery is charging		Alarm is set
	Location service turned on		Vibrate mode
	Speakerphone turned on		Phone mic is mute
	Scanner turned on		Scanner turned on, but trigger turned off

© 2024 Point Mobile Co., Ltd. All rights reserved

Learning the Basics

Notification icons

Icon	Description	Icon	Description
	Missed call		New SMS or MMS message
	New Email		Connected to VPN network
	Upcoming event		Other input method available
	File uploaded		File downloaded
	File copied		OTG device connected
	There are more notifications		

Notification panel

Notification panel displays a list of all notifications. Tap a notification to respond.

To open the Notification panel, drag the Status bar down. To close the panel, swipe it up.

Figure 30 Notification panel

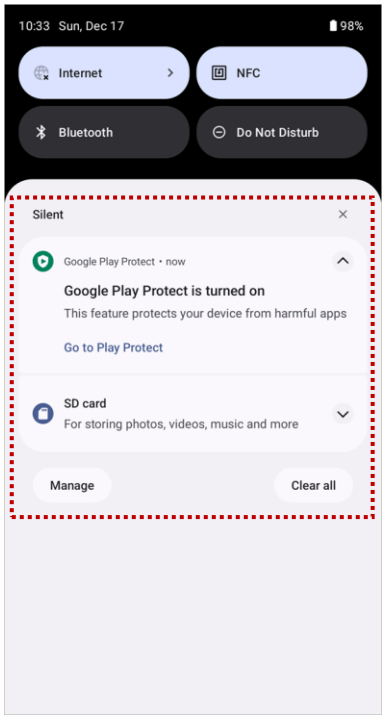

© 2024 Point Mobile Co., Ltd. All rights reserved

Learning the Basics

Quick setting panel

Quick setting panel contains some frequently used settings such as Wi-Fi, Bluetooth, etc.

To use the Quick setting panel,

1. Open the Notification panel.
2. Drag down the Notification panel.
3. Tap a setting icon to enable / disable the setting or long-press an icon to see more detail.

Figure 31 Quick setting panel

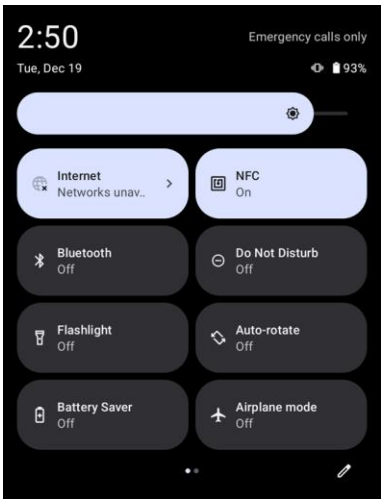

To edit the configuration of Quick setting panel,

1. Tap on the bottom of the panel.
2. By long-press and dragging the icon, customize the configuration of the panel.

© 2024 Point Mobile Co., Ltd. All rights reserved

Learning the Basics

Apps & Widget

App folder

To create the app folder, long-press an app icon and drag it to another app icon.

Figure 32 Create app folder

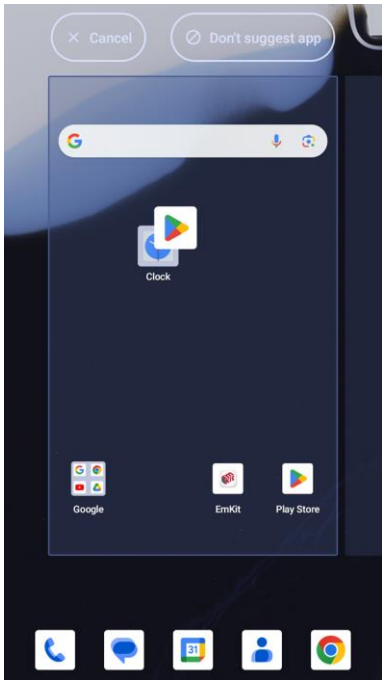

To change the folder name, tap the **Edit Name** and input a new name.

Figure 33 Change app folder name

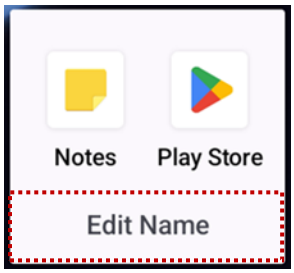

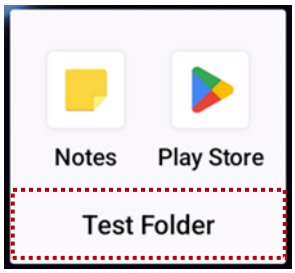

© 2024 Point Mobile Co., Ltd. All rights reserved

Learning the Basics

App drawer

All installed apps are listed alphabetically in App drawer.

- To open the App drawer, swipe up the Home screen.
- To close the App drawer, swipe down the screen.

Figure 34 App drawer

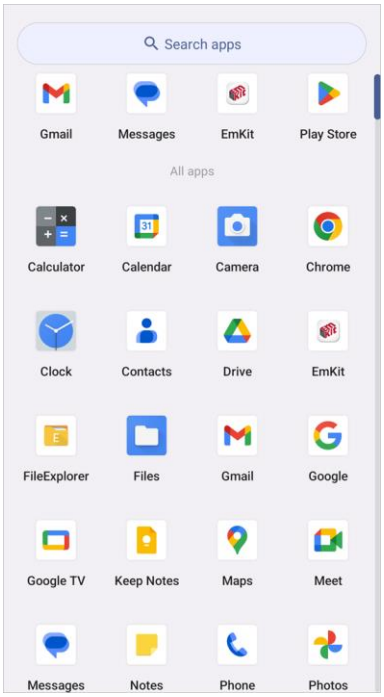

Favorites tray

To organize an app in the Favorites tray,

1. Long-press an app icon from the App drawer. Then, drag it slightly until the Home screen is shown.
2. Place the app icon in the Favorites tray.

Figure 35 Add an app to Favorites tray

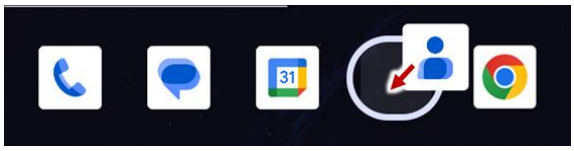

© 2024 Point Mobile Co., Ltd. All rights reserved

Learning the Basics

Organize app in Home screen

To organize an app in the Home screen,

1. Long-press an app icon from the App drawer. Then, drag it slightly until the Home screen is shown.
2. Place the app icon where you want.

   (To cancel to place the app, drag it to **Cancel** area and release.)

Figure 36 Place app in Home screen

© 2024 Point Mobile Co., Ltd. All rights reserved

Learning the Basics

To remove an app or widget in the Home screen,

1. Long-press an app icon or widget.
2. Drag it to **Remove** area and release.

Figure 37 Remove from Home screen

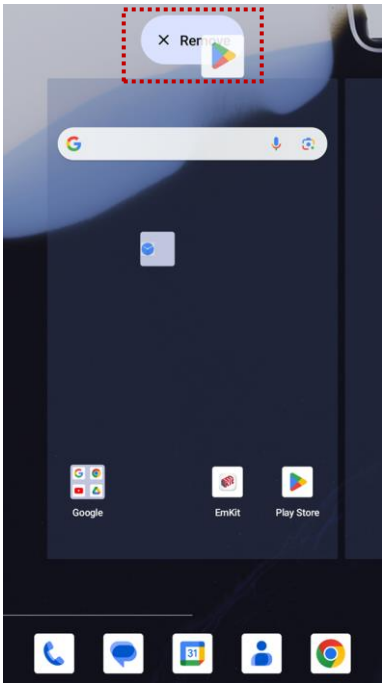

© 2024 Point Mobile Co., Ltd. All rights reserved

Learning the Basics

Widget

To add a widget in the Home screen,

1. Long-press the empty space of the Home screen.
2. In three menus, select **Widgets**.

Figure 38 Widget menus

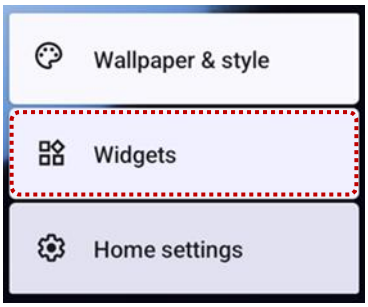

3. Among the list, tap and hold a widget you want to add.
4. Place the widget to the Home screen by dragging.

© 2024 Point Mobile Co., Ltd. All rights reserved

Learning the Basics

Call

Note: *Calling is only available on WWAN SKU.*

To make or receive a phone call, SIM card is required. Insert SIM card first regarding Install SD & SIM cards.

Making a call

1. Tap **Phone** from Home screen or App drawer.
2. Tap to open a dialer.
3. Input a phone number.

Figure 39 Dialer

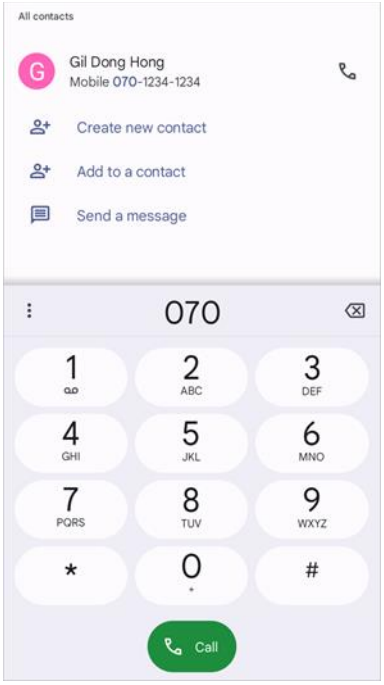

4. Tap Call or next to a searched number to make a call.

© 2024 Point Mobile Co., Ltd. All rights reserved

Learning the Basics

5. Control the Tap to hang up the phone.

Figure 40 Calling screen

Icon	Function Name	Description
	Keypad	Open the keypad
	Mute	Mute microphone
	Speaker	Speakerphone mode
	(More) Add call	Add another call (Enable when receiver answer the phone)
	(More) Hold	Hold the call

© 2024 Point Mobile Co., Ltd. All rights reserved

Learning the Basics

Answering a call

Check the caller's name and number and tap **ANSWER** button to answer the phone call. Or tap **DECLINE** button to decline the phone call.

Figure 41 Receiving call

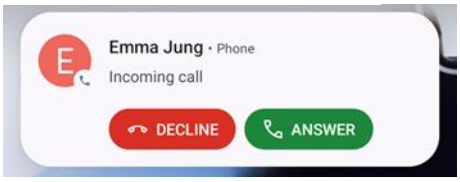

© 2024 Point Mobile Co., Ltd. All rights reserved

Learning the Basics

Contacts

Add a contact

Add a contact via dialer

1. Navigate to dialer through Phone, and enter the number.
2. Tap **Create new contact** or **Add to a contact** to save the number.
3. Input additional information.
4. Tap **Save**.

Add a contact via contacts app

Navigate to **Contacts** from App drawer and tap + to add a new contact.

Figure 42 Add new contact via Contacts

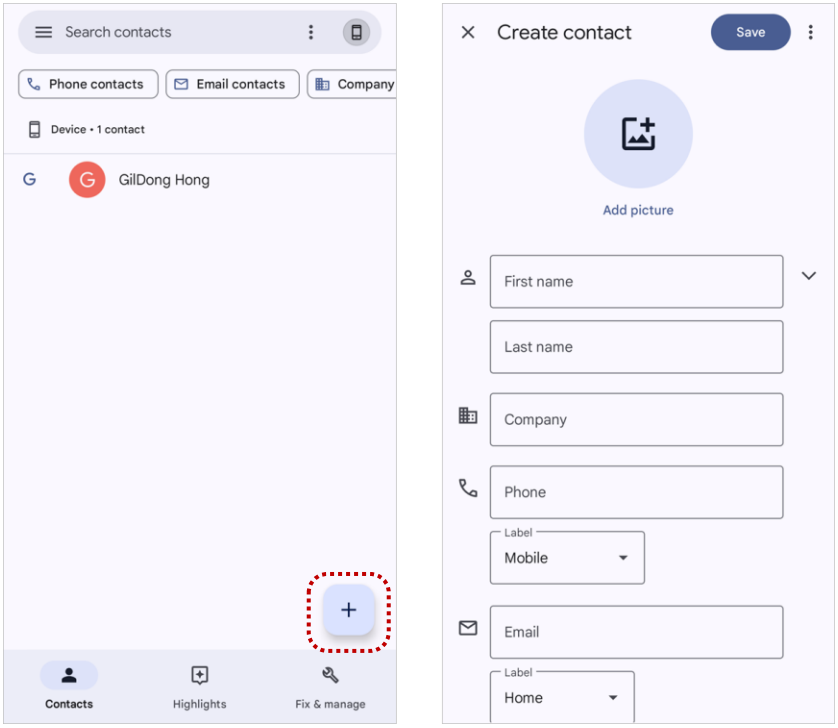

Enter the contact details and tap **Save** on the top of the screen.

© 2024 Point Mobile Co., Ltd. All rights reserved

Learning the Basics

Contact detail

Select a contact from the list to find more detail information.

Figure 43 Contact detail

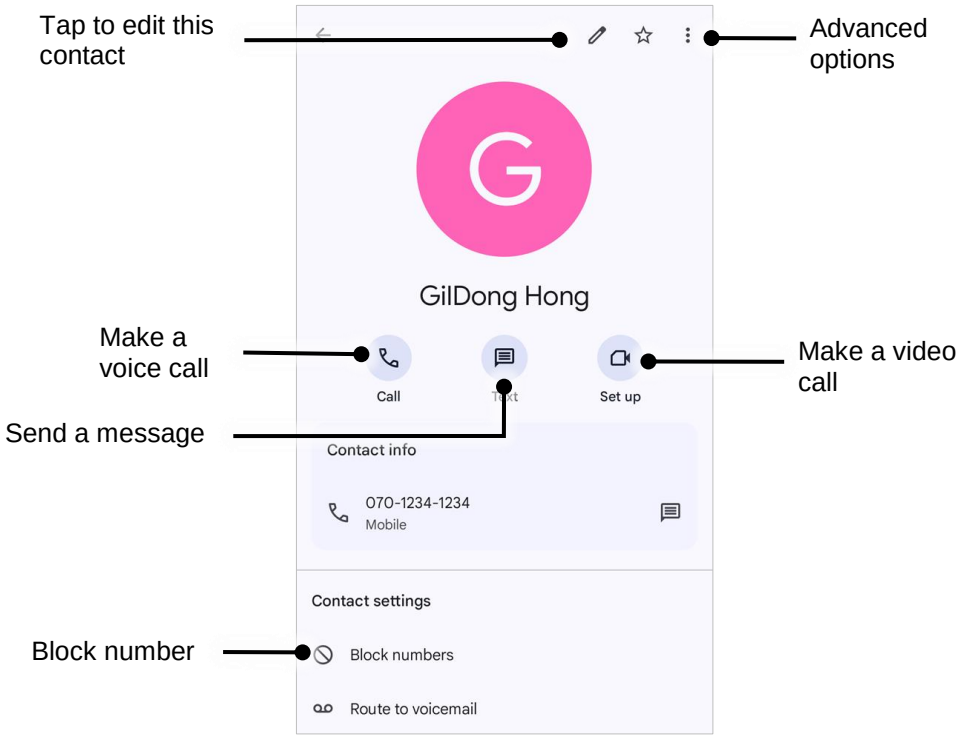

Tap ⋮ to open advanced options such as delete, share, block, etc.

Figure 44 Contact advanced options

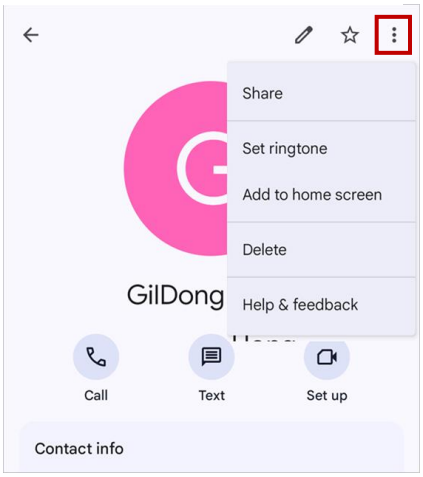

© 2024 Point Mobile Co., Ltd. All rights reserved

Learning the Basics

Message

Note: *Message feature is only available on WWAN SKU. And it requires a SIM card.*

Send a message or find the received message through Message application .

1. Launch **Message** from App drawer.
2. Tap **Start Chat** and type the receiver's name or phone number.

Figure 45 Message list

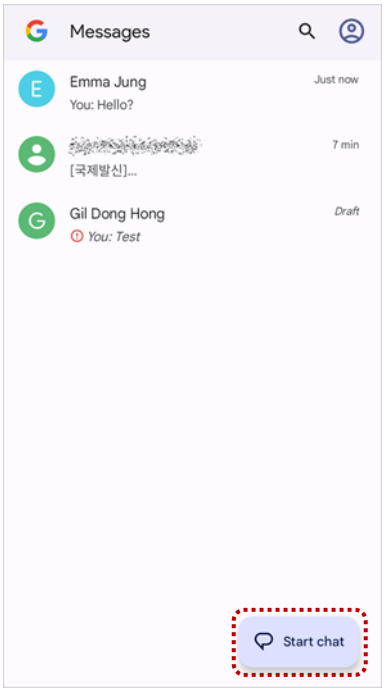

3. Input a message.
4. Tap icon to send.

Figure 46 Message send

© 2024 Point Mobile Co., Ltd. All rights reserved

Learning the Basics

MTP Connection with PC

To transfer the files with a PC, connect the device to the PC via USB cable first.

1. Drag down Status bar and tap **Android System** notification to change USB preference option.

Figure 47 USB connection notification

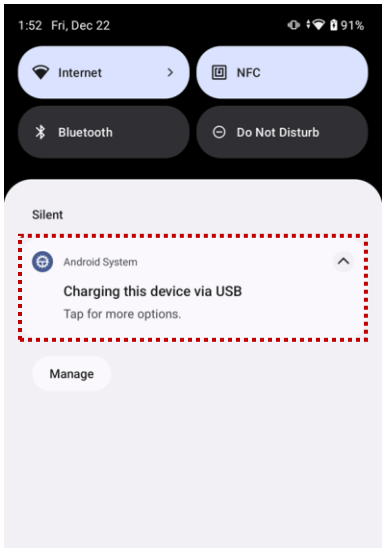

2. Change the option to **File Transfer** from **No data transfer.**

Figure 48 USB Preferences

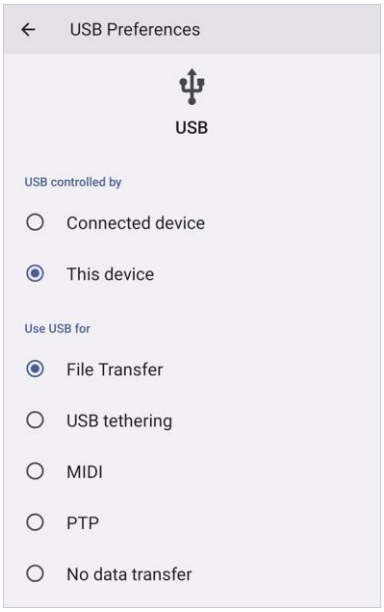

© 2024 Point Mobile Co., Ltd. All rights reserved

Learning the Basics

3. Now PC can recognize the connected device. Find PM95 device from file explorer of the PC.

Figure 49 File explorer on PC

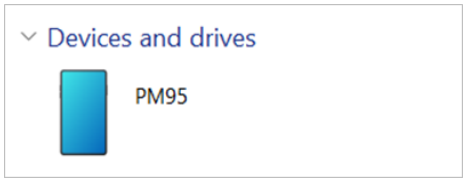

Manage the Files

Figure 50 FileExplorer main screen

No	Description
1	Select media file type or storage
2	Open the advanced option – Create a new window or folder, Select all files and folders, etc.
3	Search a file
4	Change the view of file list
5	Tap a file or folder to open. Or long-press a file or folder to select

© 2024 Point Mobile Co., Ltd. All rights reserved

Learning the Basics

Long-press a file (folder) or tap the icon which is located beside of file name to select the file (folder).

Figure 51 FileExplorer screen when file selected

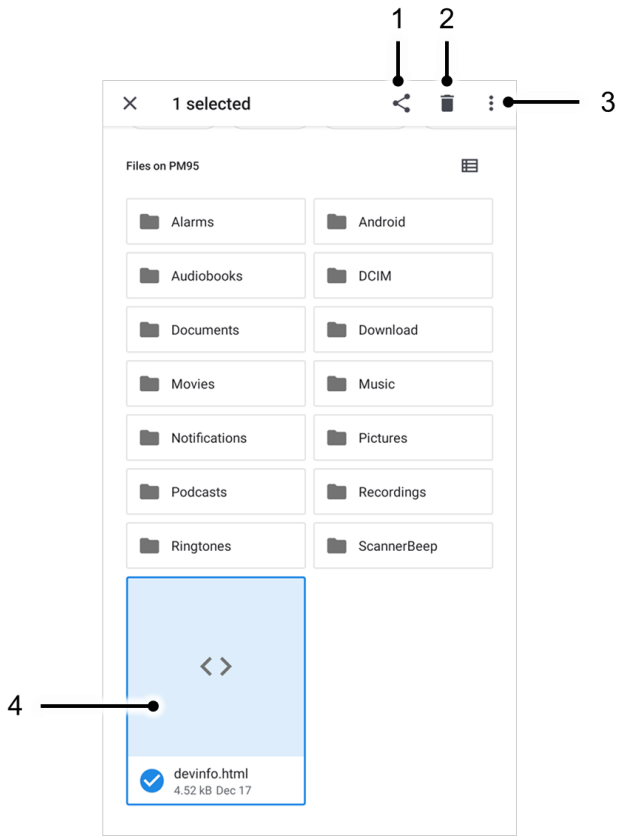

No	Description
1	Share the file via Bluetooth / Gmail / Google Drive, etc. (Sharing is possible only with files)
2	Delete the files or folders
3	Open the advanced option - Open with: Select which app to open the file - Sort by…: Sort the list by file name, size, type, etc. - Select all: Select all files and folders - Copy / Move to: Copy or move the file to a new location - Compress: Create Zip file with the selected files or folders - Rename: Rename the file or folder - Get info: Display the file information
4	Selected file or folder is highlighted

© 2024 Point Mobile Co., Ltd. All rights reserved

Learning the Basics

Lock the Screen

Protect the device from unauthorized personnel by setting up the screen lock.

1. Navigate to **Settings** > **Security**.
2. Tap **Screen lock**.

Figure 52 Screen lock

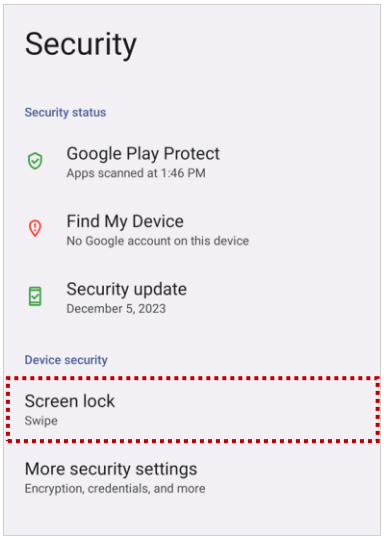

3. Choose a screen lock method.
   - None: Screen unlocks immediately
   - Swipe: Swipe the lock screen to unlock (Default)
   - Pattern: Draw a pattern to unlock
   - PIN: Input a PIN to unlock (At least 4 digits)
   - Password: Input a password to unlock (At least 4 characters)

© 2024 Point Mobile Co., Ltd. All rights reserved

Learning the Basics

Settings

There are two ways to go to **Settings**:

- Open the App drawer and tap **Settings**
- Open the Quick setting panel and tap gear icon

Adjust display brightness

To adjust the display brightness level,

- Open Quick setting panel and adjust display brightness bar
- Go to **Settings** > **Display** > **Brightness level**

Figure 53 Normal brightness level

Figure 54 High brightness level (higher than 80%)

Caution: *Using high brightness levels for long periods may cause eye strain and increase battery consumption.*

Adjust sound

To adjust sound volume, go to **Settings** > **Sound & vibration** and control the Media, Call, Ring & notification, Alarm volume bars.

Figure 55 Volume bars

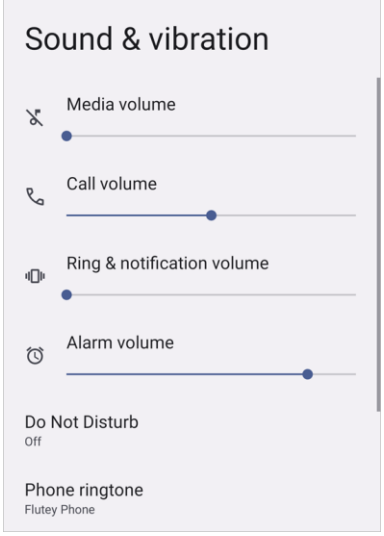

Caution: *Using high volume levels for long periods may cause ear strain and increase battery consumption.*

© 2024 Point Mobile Co., Ltd. All rights reserved

Learning the Basics

Adjust font size

If the display and text size are too small or too large, adjust the size.

1. Go to **Settings** > **Display** > **Display size and text**.
2. Referring to the **Preview**, adjust the size controller.

Figure 56 Set display and text size

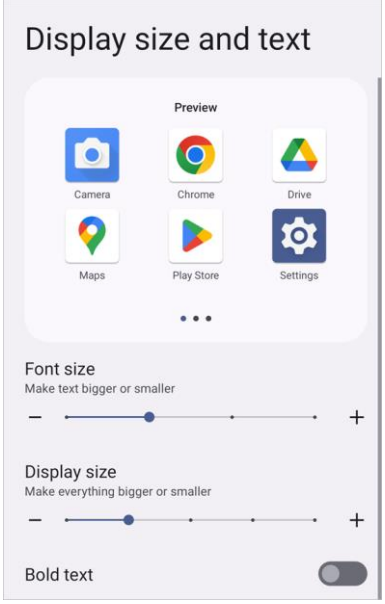

© 2024 Point Mobile Co., Ltd. All rights reserved

Using the Buttons

Screenshot

To take a screenshot, use one of the two ways as below.

- Press and hold **Power button + Volume down button** simultaneously.
- Press and hold the power button, and then tap **Screenshot** among the power menus.

The screenshot image will be saved to **Pictures > Screenshots** folder in the internal storage.

Program Buttons

Most buttons on the PM95 except power button can be optimized as you want. To map the button to other functions from default,

1. Navigate to **EmKit** > **Program Buttons**
2. Tap **SMART REMAP**. And press a button you want to remap.

Figure 57 Program Buttons - button list

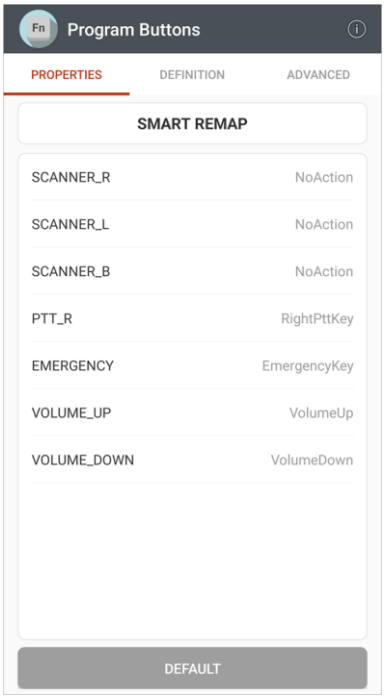

Note: *SCANNER_B indicates the trigger button on the gun handle.*

3. Choose a behavior you want to use among the tabs.
4. Tap **APPLY**.

© 2024 Point Mobile Co., Ltd. All rights reserved

Camera

To use the camera, open App drawer and tap Camera application .

Figure 58 is a main screen of Camera application, and Figure 59 is a screen that is displayed when you swipe the screen to right.

Figure 58 Camera main screen

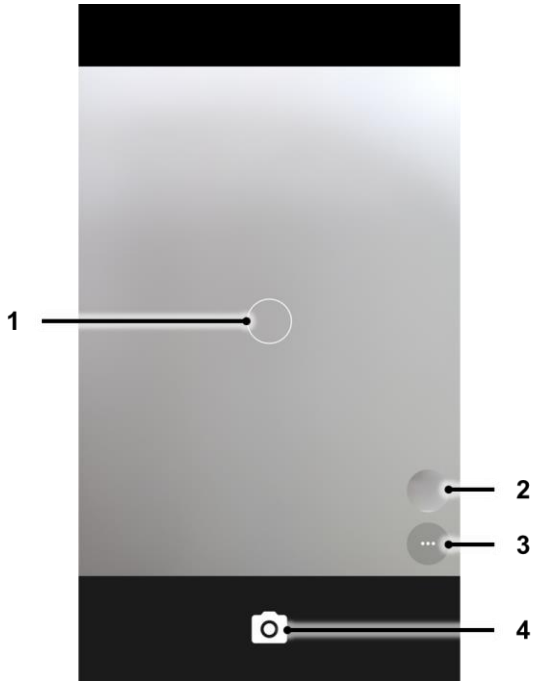

Figure 59 Camera mode change/setting screen

No	Name	Description
1	Focus zone	You can change the focusing area by touching the other area
2	Gallery	Go to gallery to see the currently taken photos
3	Advanced camera option	: Set timer : Display the grid on the screen : Set flash mode (Activate / Deactivate / Auto mode) / : Switch the camera (Front / Rear)
4	Shutter button	Take a picture or recode a video
5	Mode change button	Change the Camera or Video mode
6	Advanced camera setting	Set resolution & quality of picture Enable / Disable saving location and manual exposure

© 2024 Point Mobile Co., Ltd. All rights reserved

Scanner

Notice: *Scanner is embedded on the PM95 Scanner SKU or MSR/ICCR SKU.*

Scanner is placed on the top of the device. Optimize the scanner settings for working environment and improve the efficiency.

Turn on / off the Scanner

The scanner is turned off by default. To turn on the scanner, follow the steps.

1. Go to **EmKit** or **Settings** and tap **ScanSettings**.
2. Tap toggle button to turn on/off the barcode scanner.
3. Check if the scanner icon is placed on Status bar.

Figure 60 Turn on scanner

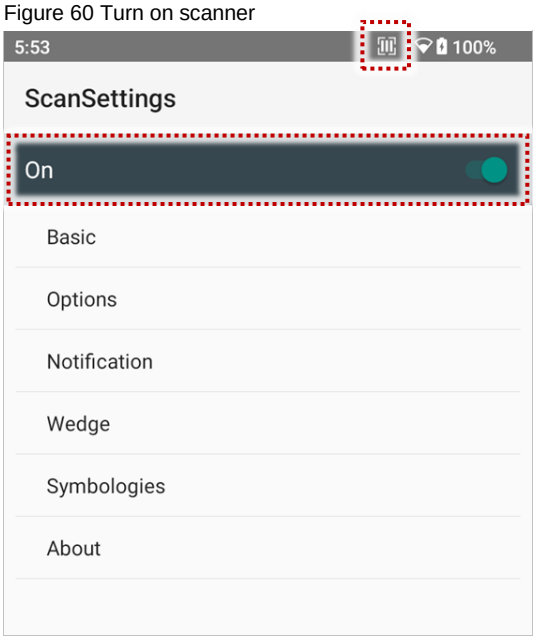

© 2024 Point Mobile Co., Ltd. All rights reserved

Scanner

ScanSettings

When the scanner is turned on, scanner setting menus will be displayed. **ScanSettings** consists of

- Basic
- Options
- Notification
- Wedge
- Symbologies
- About

Basic

Control the scanning options and wedge mode options.

1. Scanning
   - Change the scanner's trigger timeout and set scan mode (single / auto / continuous / multi scan).
   - Enable or disable the TouchScan, which is a software scanner button. Place a scan icon in any position and tap the icon to read a barcode.

Figure 61 ScanSettings - Basic

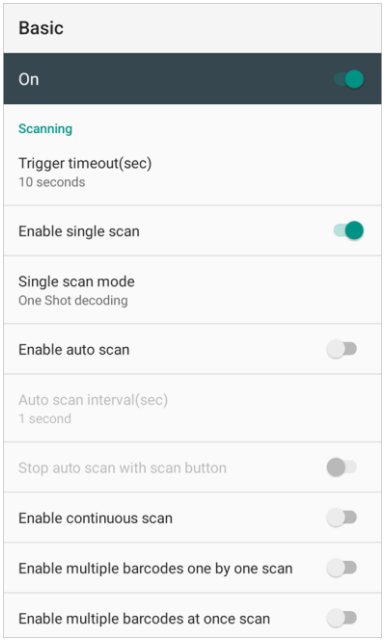

Figure 62 ScanSettings - TouchScan

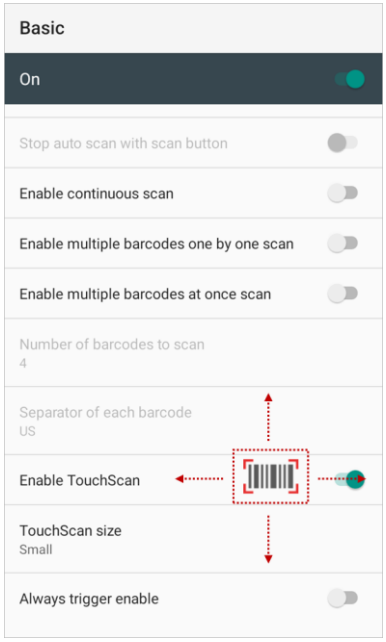

© 2024 Point Mobile Co., Ltd. All rights reserved

Scanner

2. Wedge mode
    - Change the result type of decoded data among the below list.
        - User Message
        - Keyboard Event (Multiple)
        - Keyboard Event (Single)
        - Clipboard (KEYCODE_PASTE)
        - Clipboard (Ctrl + V)
        - Intent Broadcast
        - Custom Intent
    - Set Terminator as,
        - None
        - Space
        - Tab
        - LF
        - Tap & LF

Options

Enable / Disable the center window, Aimer, Illumination. And set scanner decoding settings.

Figure 63 ScanSettings - Options

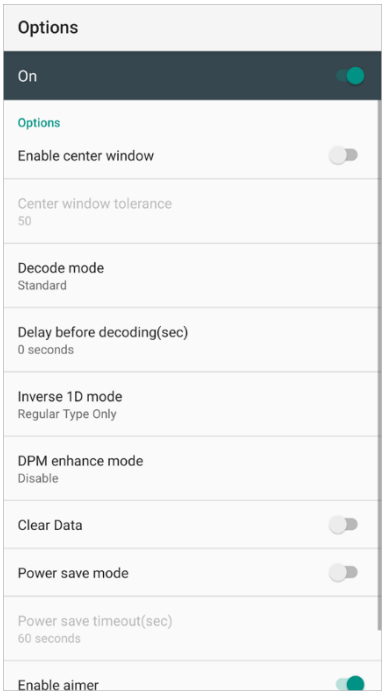

© 2024 Point Mobile Co., Ltd. All rights reserved

Scanner

Notification

Control the beep sound, LED and vibration option when scanning the barcode.

Figure 64 ScanSettings - Notification

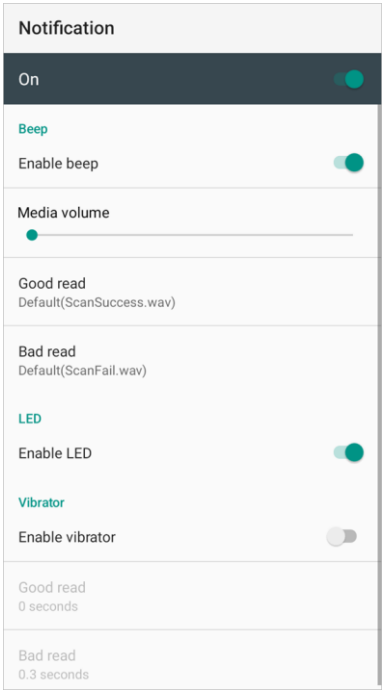

© 2024 Point Mobile Co., Ltd. All rights reserved

Scanner

Wedge

Set below items in Wedge settings

- Barcode ID
- AIM ID
- Group separator
- Prefix
- Suffix
- Character set
- Extended Wedge

Figure 65 ScanSettings - Wedge

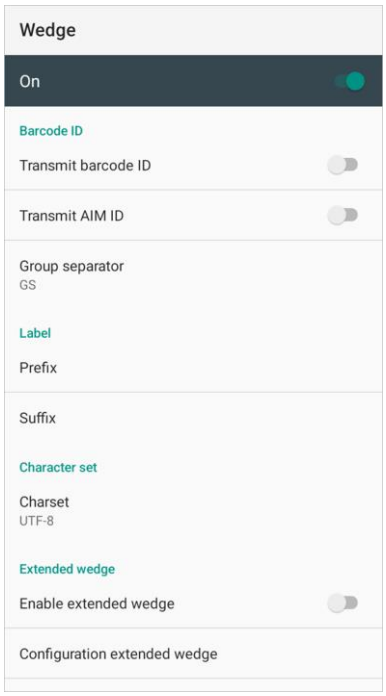

© 2024 Point Mobile Co., Ltd. All rights reserved

Scanner

Extended wedge

PM95 supports Extended wedge that allows to edit the decoded data. Tap **Enable extended wedge** toggle switch and then set a rule in **Configuration extended wedge**.

Figure 66 ScanSettings - Extended wedge

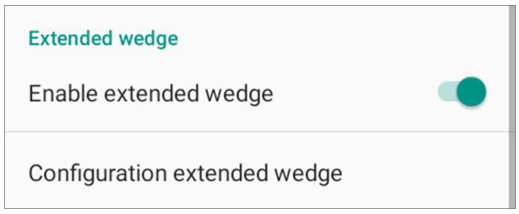

For example, make a rule that add a string "*Point Mobile*" at the start of decoded data whenever decoding CODE128.

1. Tap **Style** (1) and select **Condition** (2).

Figure 67 Extended wedge example_1

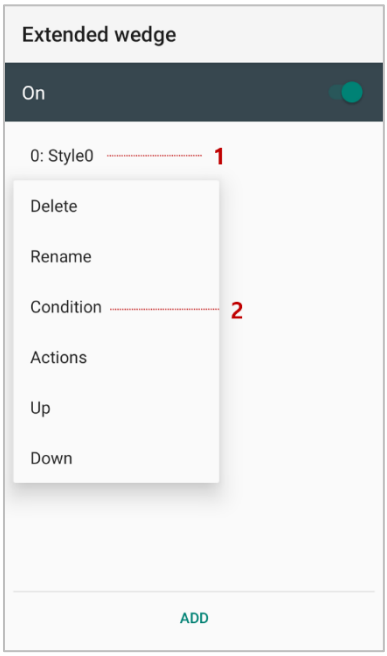

© 2024 Point Mobile Co., Ltd. All rights reserved

Scanner

2. Tap **Symbologies** and select **CODE128** among the symbologies.

Figure 68 Extended wedge example_2

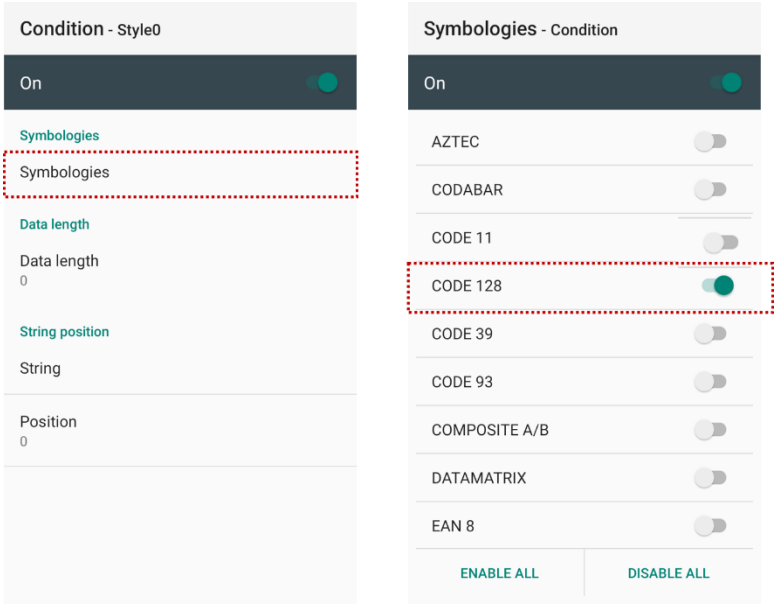

3. Tap **Style** (1) and select **Actions** (2).

Figure 69 Extended wedge example_3

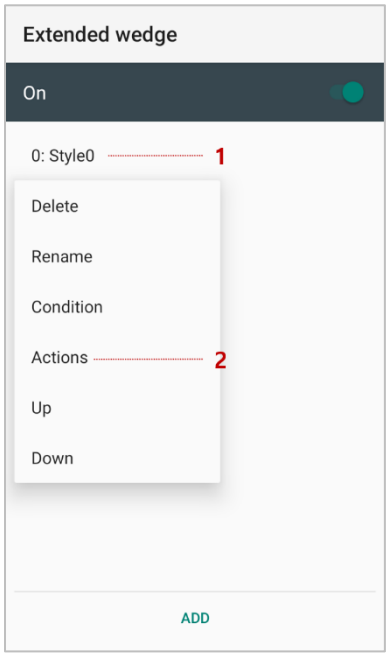

© 2024 Point Mobile Co., Ltd. All rights reserved

Scanner

4. Tap **ADD** and select **Move to start** to point the start of the decoded data.

Figure 70 Extended wedge example_4

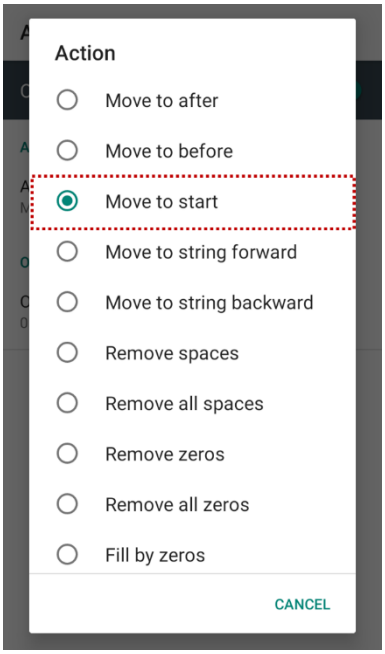

5. Add another action of which action type is Send string. Set value as "*Point Mobile*".

Figure 71 Extended wedge example_5

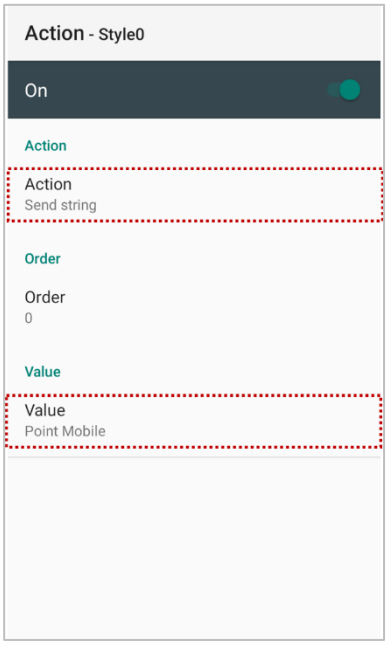

© 2024 Point Mobile Co., Ltd. All rights reserved

Scanner

6. "*Point Mobile*" string will be added to decoded CODE128 data.

Before	After
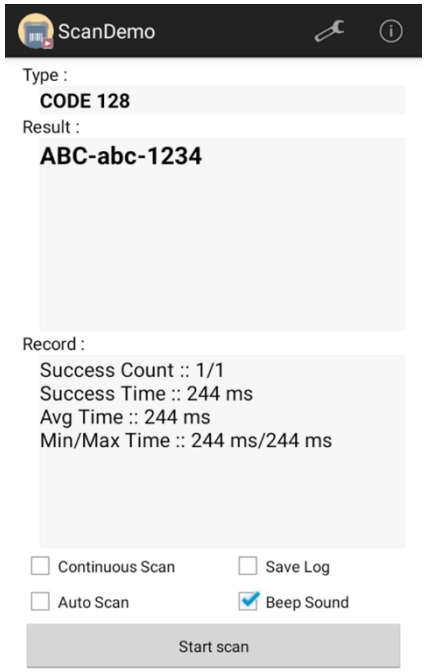	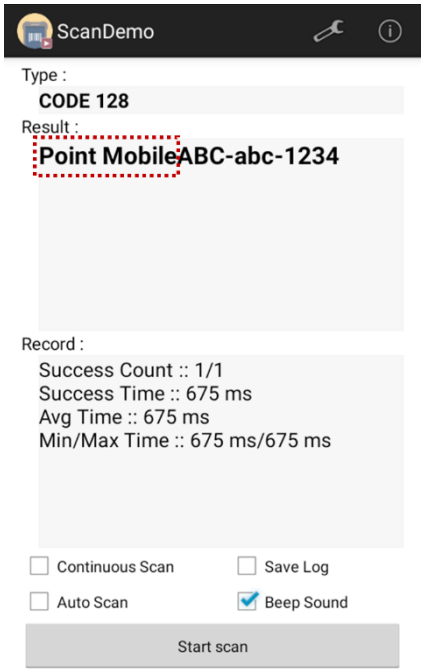

© 2024 Point Mobile Co., Ltd. All rights reserved

Scanner

Symbologies

Enable or disable the specific symbology or set detail options. By tapping each symbology name to access detail options.

Figure 72 ScanSettings - Symbologies

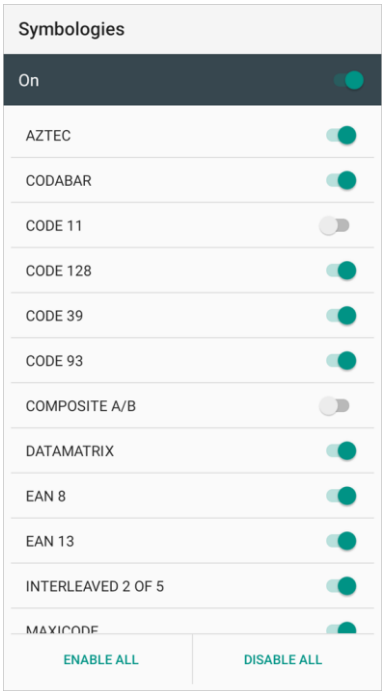

About

Find the scanner information or restore the scanner settings to default.

Figure 73 ScanSettings - About

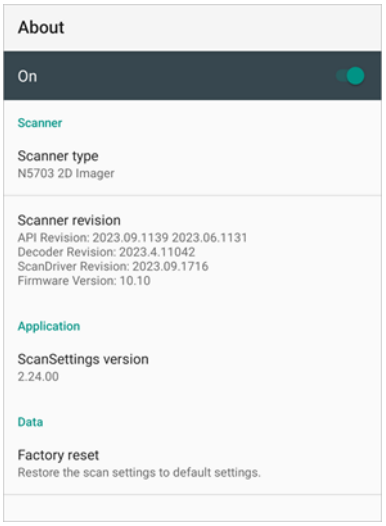

© 2024 Point Mobile Co., Ltd. All rights reserved

Scanner

Scan a Barcode

Point the scanner at the barcode and press the scan button on the device or gun handle. If another button is set as scan trigger using Program Buttons (Refer to Use the Buttons – Program Buttons), it can trigger the scan action, too.

Note:

If you set the single scan mode as Press decoding or Release decoding, it may require another button pressing mechanism to trigger scanning. Refer to Single Scan Mode article for more detail.

N5703 Scanner

Center the cross-hair laser aimer over the barcode. The barcode must be within the square made by the edge of the aimer. You can tilt the aimer slightly for a comfortable angle to scan.

Figure 74 Aiming barcode (N5703)

© 2024 Point Mobile Co., Ltd. All rights reserved

Scanner

ScanDemo

Using ScanDemo app, demonstrate scanning feature.

1. Execute **EmKit** > **ScanDemo** .
2. Scan a barcode by pressing the scan button on the device or tapping **Start scan** button on the screen.
3. Find scan result.

Figure 75 ScanDemo

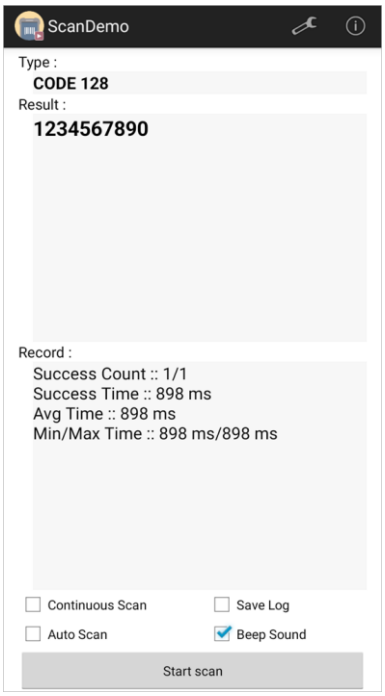

© 2024 Point Mobile Co., Ltd. All rights reserved

Wireless

Mobile Network

Note: *Mobile network is supported on PM95 WWAN SKU only.*
Check if your device is WWAN SKU.

To connect mobile network, SIM card is required. Insert SIM card first referring Install SD & SIM cards

After inserting the SIM card, reboot the device. When network is connected, a network icon will be appeared on the status bar.

Figure 76 Mobile network icon

- **5G network icon:** 5G
- **LTE network icon:** LTE

Find network information and adjust the network settings in **Settings** > **Network & internet** > **SIMs**.

Figure 77 Mobile network setting

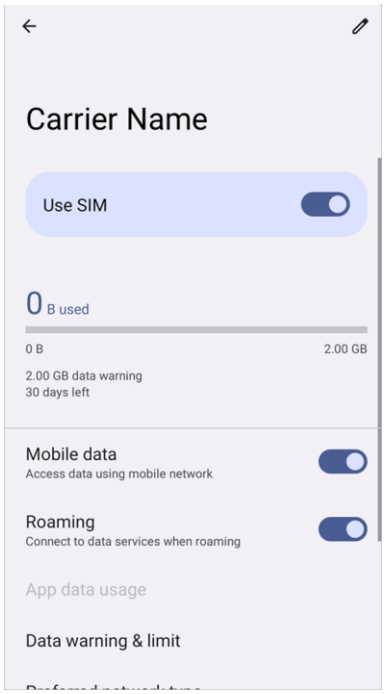

© 2024 Point Mobile Co., Ltd. All rights reserved

Wireless

Wi-Fi

To turn on and connect a Wi-Fi,

1. Go to **Settings** > **Network & internet** > **Internet**.
2. Tap Wi-Fi toggle switch to enable Wi-Fi.
3. Device searches for nearby Wi-Fi signals and lists them in order of signal strength.
4. Select a Wi-Fi SSID to connect.
5. The message **Connected** under the SSID means the device complete to connect to the Wi-Fi.

Figure 78 Wi-Fi connected

Note: *There are Open Wi-Fi network and Secured Wi-Fi network. You can tell those apart by lock icon ( ) in the nearby Wi-Fi list.*

To connect the secured Wi-Fi network, you need to enter the password.

Figure 79 Open Wi-Fi Network

Figure 80 Secured Wi-Fi Network

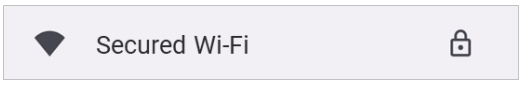

If there is a saved Wi-Fi network, simply turn on the Wi-Fi through the Quick setting panel. The saved network will be connected automatically.

Figure 81 Wi-Fi on Quick setting panel

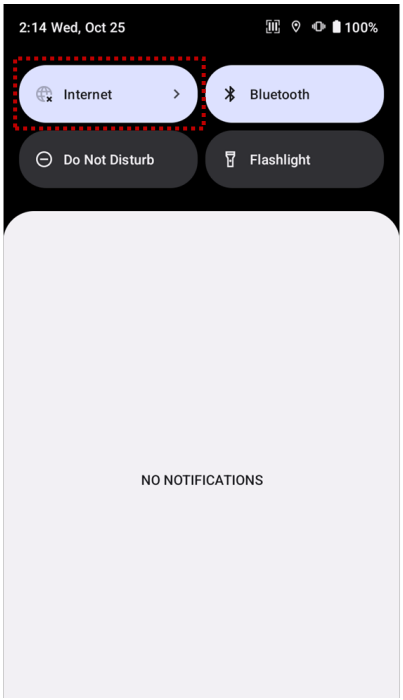

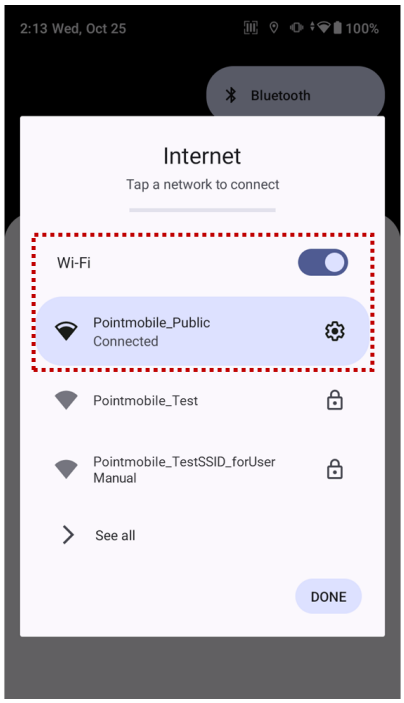

© 2024 Point Mobile Co., Ltd. All rights reserved

Wireless

Bluetooth

Turn on / off

Bluetooth is turned off as default. There are two ways to turn on the Bluetooth,

- Open quick setting panel and enable Bluetooth

Figure 82 Bluetooth in Quick setting panel

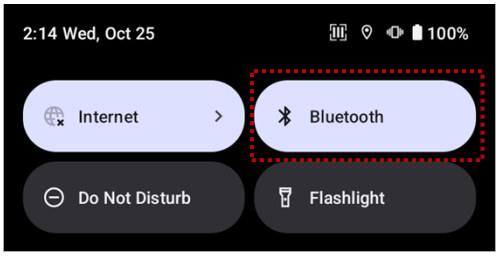

- Go to **Settings** > **Connected devices** > **Pair new device**

Pair and Connect

To connect with a new device,

1. Go to **Settings** > **Connected devices**.
2. Tap **Pair new device.**
   (Bluetooth will be turned on automatically)
3. Select the device you want to pair among **Available devices** list.

Figure 83 Bluetooth available devices

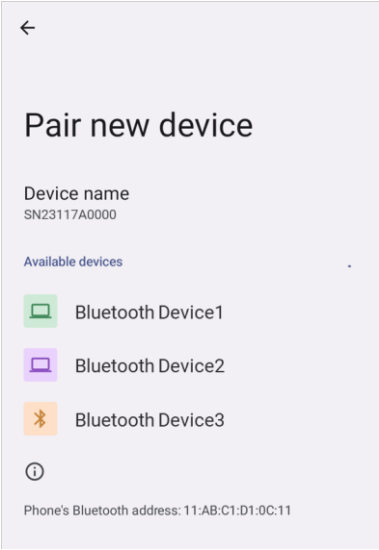

4. Follow instructions on the screen (Pairing code or pairing confirmation dialog) and tap **PAIR.**

© 2024 Point Mobile Co., Ltd. All rights reserved

Wireless

5. When the connection is succeeded, the connected device name is listed under the **Other devices** list.

Figure 84 Bluetooth currently connected

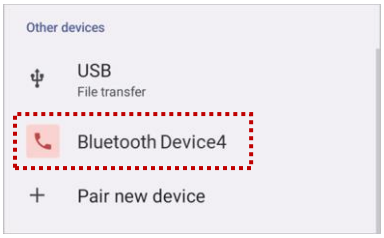

To connect a device previously connected, select the device name from the **Saved devices** list.

Figure 85 Previously connected devices

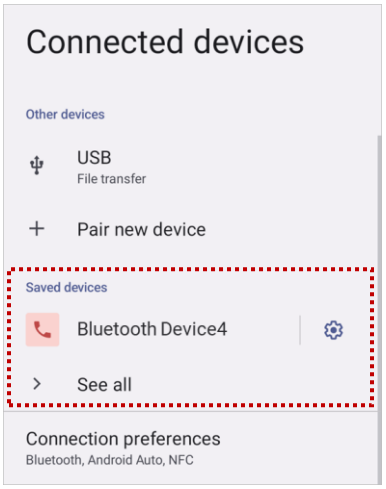

Unpair and Disconnect

To unpair (forget) the device, select the name of the device you want to unpair from the **Other devices** list and tap **FORGET** 🗑.

Or tap **DISCONNECT** ✕ to disconnect only and not unpair.

Figure 86 Bluetooth device details

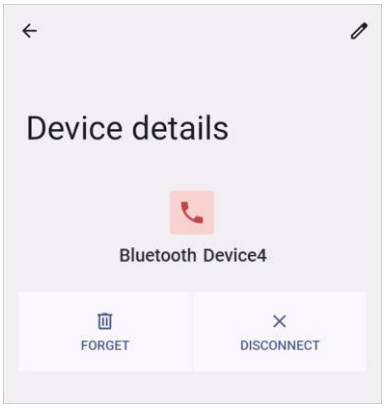

© 2024 Point Mobile Co., Ltd. All rights reserved

Wireless

Change the Bluetooth device details

Tap the icon next to the device name to see device details.

If the device you want is not listed under the **Saved devices**, tap **See all**.

Figure 87 Bluetooth device detail button

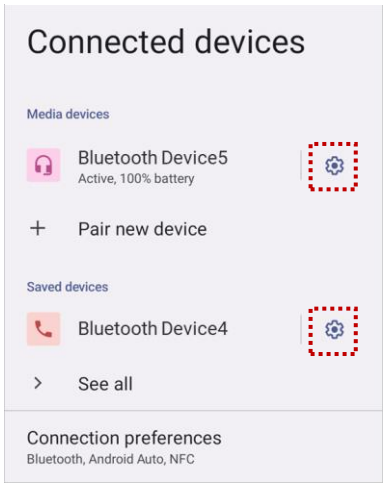

- To change the device's name, tap on the top of the screen
- Turn other settings on or off (Available on some devices)

BLE Beacon

The PM95 integrates the BLE beacon that can transmit BLE signal up to **30 days** while it is powered off and without the main battery.

This transmission duration is based on the default BLE beacon settings and it can be increased or reduced by adjusting transmit power and interval.

© 2024 Point Mobile Co., Ltd. All rights reserved

Wireless

NFC

Scanner SKU & Non-Scanner SKU

On the PM95 Scanner or Non-Scanner SKU, the NFC antenna is located at the 1/3 top of the display. Bring the NFC tag close to the tapping area as Figure 89.

NFC feature is enabled by default.

But if NFC does not work, make sure the NFC is enabled from the **Settings** > **Connected devices** > **Connection preferences** > **NFC**.

Figure 88 Scanner & Non-Scanner SKU NFC tapping area

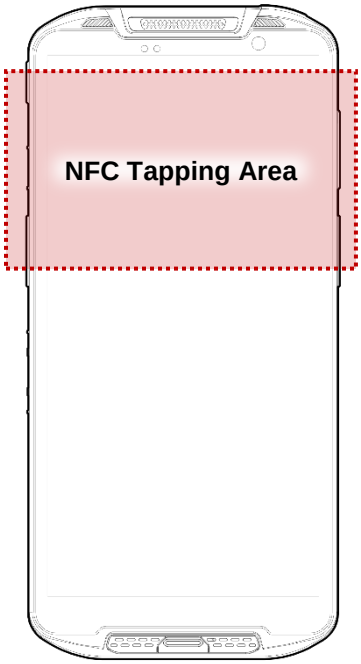

Figure 89 Scanner & Non-Scanner SKU NFC tapping

© 2024 Point Mobile Co., Ltd. All rights reserved

Wireless

MSR/ICCR SKU

On the PM95 MSR/ICCR SKU, the two NFC antenna are embedded. One is located at the 1/3 top of the display, and another one is located to the MSR/ICCR part.

If you want to read an NFC tag not for the contactless payment, bring the NFC tag close to the MSR/ICCR part as Figure 91.

NFC feature is enabled by default. But if NFC does not work, make sure the NFC is enabled from the **Settings** > **Connected devices** > **Connection preferences** > **NFC**.

Notice: *If you want to use the* ***contactless payment*** *using NFC, bring the card to the front of the device. Refer to the Contactless Payment under the* ***Payment*** *chapter.*

Figure 90 MSR/ICCR SKU NFC tapping area

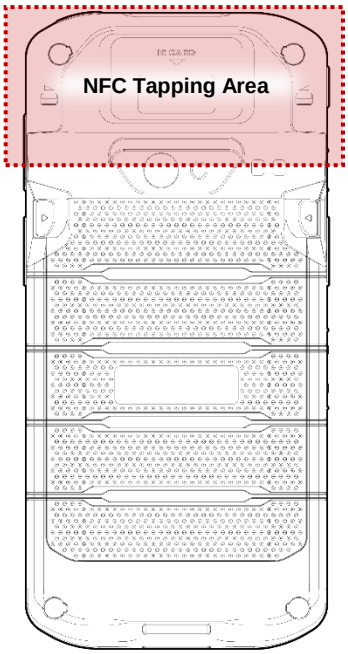

Figure 91 MSR/ICCR SKU NFC tapping

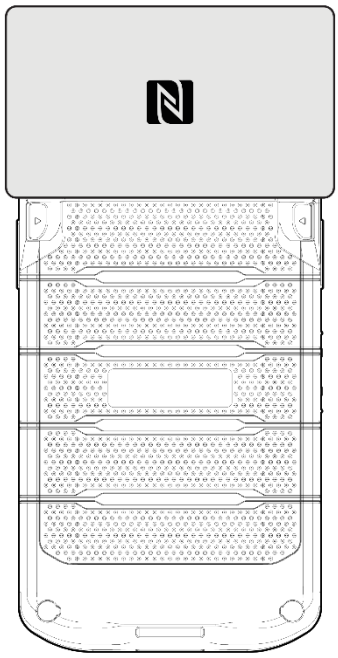

© 2024 Point Mobile Co., Ltd. All rights reserved

Wireless

RFID

PM95 can get RFID tag data through RF88 (sold separately). PM95 and RF88 can be connected using Bluetooth or wired connection.

To connect the devices, **RFID Control** application is required. You can download the app from Service Portal.

If you want to install the PM95 onto the RFID reader, a PM95-dedicated sled bracket must be assembled on the RF88.

Note: *Find more detail in RF88 User manual.*

© 2024 Point Mobile Co., Ltd. All rights reserved

Payment

Notice: *Payment with a card is only available on the PM95 MSR/ICCR SKU.*

Magnetic Stripe Card

Read a magnetic stripe card using the MSR (Magnetic Stripe Reader) on the device's rear side.

Swipe the card through the MSR at a proper and steady speed. The magnetic stripe must face the front of the device and downward as Figure 92.

You can read the card bi-direction.

Figure 92 MSR Payment

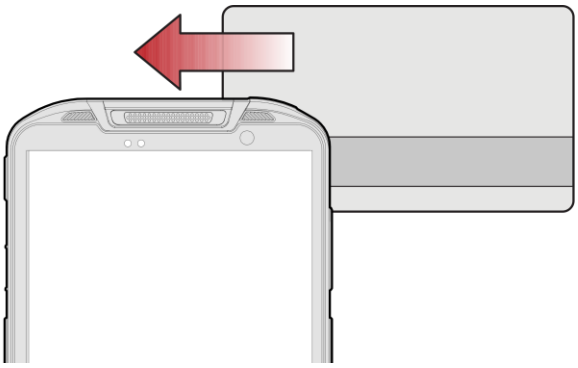

© 2024 Point Mobile Co., Ltd. All rights reserved

Payment

IC Card (Smart Card)

Read an IC card using the ICCR (IC Card Reader) on the device's rear side. The ICCR places outward of the MSR.

Figure 93 PM95 ICCR

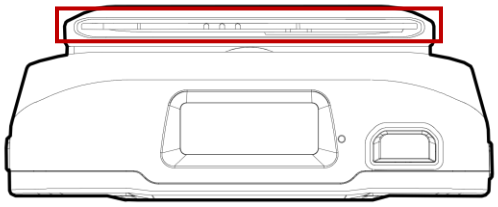

Insert the card into the ICCR and wait to complete the transaction. The IC chip must face the front of the device as Figure 94.

Figure 94 ICCR Payment

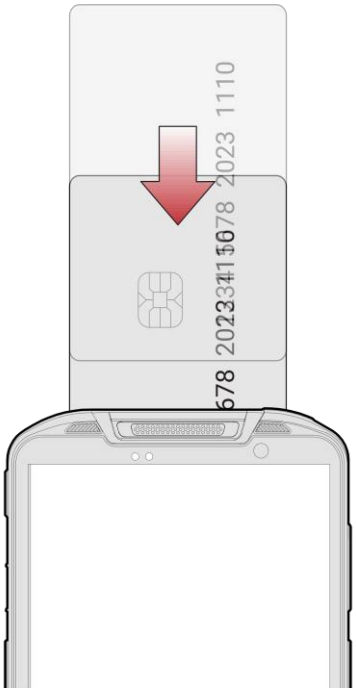

© 2024 Point Mobile Co., Ltd. All rights reserved

Payment

Contactless Payment

Make a contactless payment with NFC feature. Bring the card to the 1/3 top of the display (front side) as Figure 95, and keep the position during the transaction.

Figure 95 Contactless payment

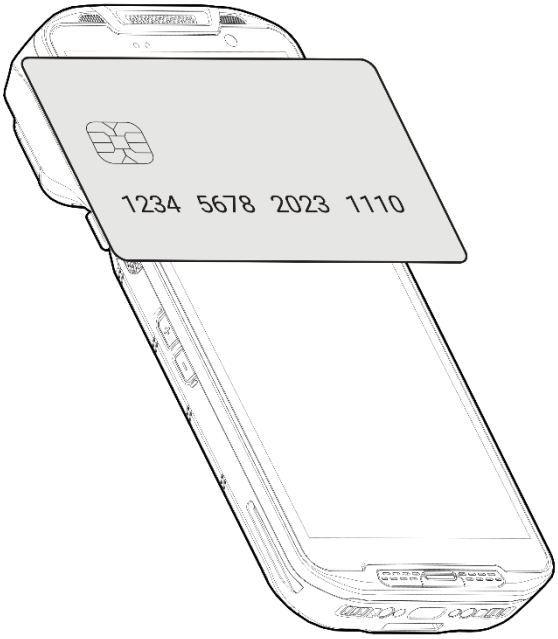

© 2024 Point Mobile Co., Ltd. All rights reserved

System Maintenance

System Information

There are two ways for checking system information, on settings and on EmKit.

On Settings

Go to **Settings** > **About phone**. Following information can be found.

- Device name
- Phone number
- Legal information & Certificates
- SIM status
- Host Name, Model
- IMEI
- Android version
- IP address
- Wi-Fi MAC address
- Bluetooth address
- Build number

On EmKit

Go to **EmKit** > **System Information**. Following information can be found.

- Processor information
- Version information (Android version, OS image version, SDK version, etc.)
- Manufacturer information (Serial number, Part number, etc.)
- Device information (Scanner, Audio, Display, etc.)
- Battery information (Battery charging status, etc.)
- App version information (Version of EmKit apps)

© 2024 Point Mobile Co., Ltd. All rights reserved

System Maintenance

Check Device Health

EmHealthReport is a solution that provides the device's battery and eMMC health.

Monitor the battery and eMMC status to foresight their lifetime or find the cause when there is a battery problem such as cannot charge the device or rapid battery discharge.

To use, open **EmKit** and launch **EmHealthReport**. You can see the simple device health information on the main screen. To find detailed information, tap each blue arrow on the right side of the screen.

Figure 96 EmHealthReport

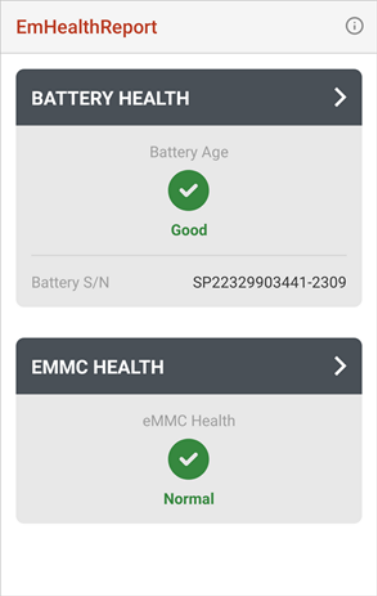

- **Battery Health**
  - Battery Serial Number
  - Battery Age
  - Battery Level
  - Battery First Use Date
  - Battery Voltage
  - Battery Temperature
  - System Temperature
  - Battery Manufacture Date
  - Smart Charging Mode
    (Refer to Smart Charging)
- **eMMC Health**
  - Pre-EOL Information
  - Device life time estimation type A
  - Device life time estimation type B

© 2024 Point Mobile Co., Ltd. All rights reserved

System Maintenance

OS Update

Periodic update improves the performance of the device. Point Mobile provides up-to-date OS version via Service Portal and FOTA. Update the device via storage, OTG port, and FOTA server. Depending on the workspace environment, choose more suitable method.

Notice: *Please backup your data before starting the update process.*

OS update via storage

To update the OS using storage,

1. Download an OS image file into the root folder of microSD card or device internal storage
2. (In case of using SD card) Insert SD card to the device and then turn the device on
3. Go to **Settings** > **System** > **System Update**
4. Check if the OS image file shows up under **AVAILABLE VERSIONS**

Figure 97 OS update via storage

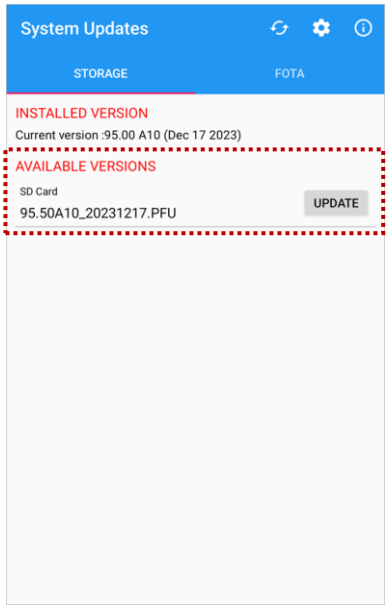

5. Tap **UPDATE** to start the update process

Note: *If the OS image file doesn't show up in* ***AVAILABLE VERSIONS****, check the file is placed in the root folder of storage. System only can recognize the file in the root folder.*

© 2024 Point Mobile Co., Ltd. All rights reserved

System Maintenance

OS update via OTG port

PM95 supports the USB OTG feature.

1. Prepare a formatted USB flash drive for OS update
2. Copy an OS image file to the root folder of the flash drive
3. Connect the flash driver to the PM95
4. Go to **Settings** > **System** > **System Update**
5. Check if the OS image file shows up under **AVAILABLE VERSIONS**
6. Tap **UPDATE** to start the update process

OS update via FOTA

If PM95 can connect to a network, use the FOTA server for the update.

1. Connect the device with a network
2. Go to **Settings** > **System** > **System Update**
3. Tap **FOTA** tab or Swipe left to move to **FOTA** tab
4. If there is an OS version newer than device's one, the server shows the new OS information

Figure 98 OS update via FOTA

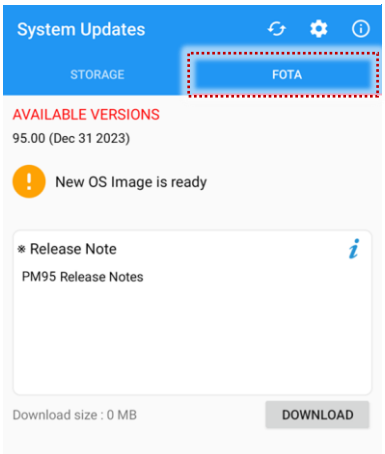

© 2024 Point Mobile Co., Ltd. All rights reserved

System Maintenance

5. Tap **Download**
6. Tap **OK** on the **OS Update** dialog to start to download the OS image file
7. To complete the update, rebooting is required.

   Tap **OK** on the **Restart required** dialog to restart the device

Note: *Basically, OS update via FOTA works over Wi-Fi or Ethernet only.*
To enable the OS update over Mobile Network too, uncheck the setting value in FOTA Settings.
Downloading over the Mobile network may result in additional charges.

Figure 99 FOTA Settings

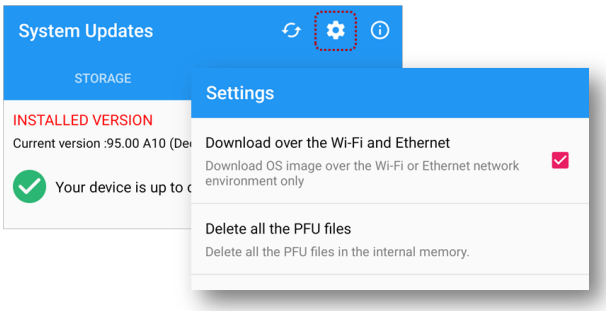

© 2024 Point Mobile Co., Ltd. All rights reserved

System Maintenance

Factory Data Reset

When PM95 work abnormal or there is a need to reset the device, follow the steps below to perform a factory data reset.

***Caution**: Factory data reset will erase all personalized settings and data saved in the device, such as Google account, apps, user data, etc. And factory data reset cannot undo.*

Factory data reset via Settings app

If the device can be turned on and access **Settings**,

1. Navigate to **Settings** > **System** > **Reset options**.
2. Tap **Erase all data (factory reset)**.
3. After being aware that factory reset will erase all data from the internal storage, tap **Erase all data**.

Figure 100 Factory data reset

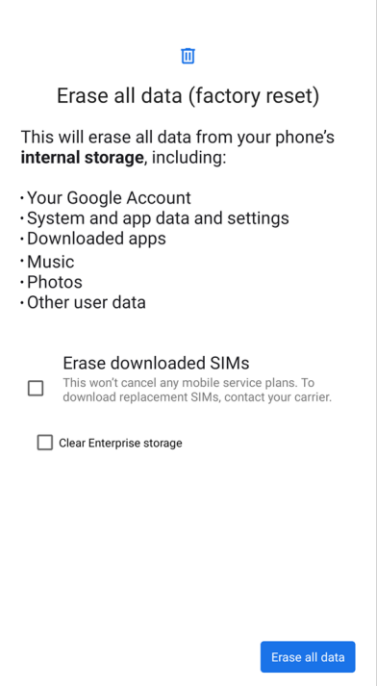

4. Tap **Erase all data** again to start the factory reset process.

© 2024 Point Mobile Co., Ltd. All rights reserved

System Maintenance

Factory data reset via recovery mode

If device works abnormal so does not turn on, try to perform factory data reset through Android recovery mode.

1. Press and hold **Power button** + **Volume down + Scan (left)** buttons simultaneously when PM95 is turned off.

Figure 101 Key combination for recovery mode

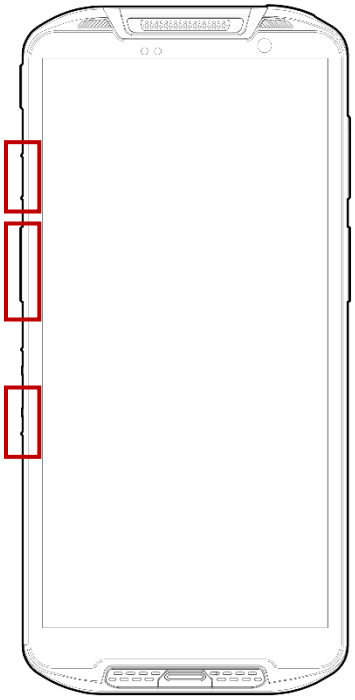

2. After short vibration, release the power button.
3. Using the buttons below, select **Recovery mode**.
   - **Move up/down** – Volume up/down
   - **Select the menu** – Power button
4. Using the same buttons as step 3, select **Wipe data/factory reset**.
5. Select **Factory data reset.**
6. After wiping the data, select **Reboot system now**

© 2024 Point Mobile Co., Ltd. All rights reserved

Accessories

PM95 supports below accessories. All accessories except hand strap and wrist band are sold separately.

Category	Accessory Name	Usage
Handy use	Hand strap or Wrist band	Carries PM95 easily
Protection case	Rugged boot	Protects PM95 from drop or damage
Sled type	Gun handle	Provides an ergonomic trigger button
	RF88	RFID reader. Reading RFID tags
Charging cradle	SSC (Single Slot Cradle) / SEC (Single Slot Ethernet Cradle)	Charges one PM95 and one PM95 battery Provide USB type C port or ethernet port
	4SBC (4 Slot Battery Cradle)	Charges up to four pieces of PM95's batteries

Hand Strap & Wrist band

The hand strap or wrist band is enclosed in the PM95 standard package. Attach the strap and you can grab the device more firmly.

Depending on the SKU type, the supplement is different.

- Scanner & Non-Scanner SKU: Hand strap
- MSR/ICCR SKU: Wrist band

© 2024 Point Mobile Co., Ltd. All rights reserved

Accessories

Hand Strap (Scanner & Non-Scanner SKU)

Figure 102 Hand strap

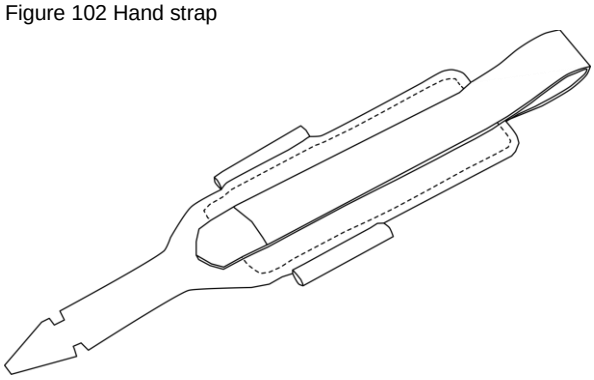

Attach hand strap

1. Using the arrow-like side of the strap through the hand strap hole.

   Figure 103 Attaching hand strap - 1

   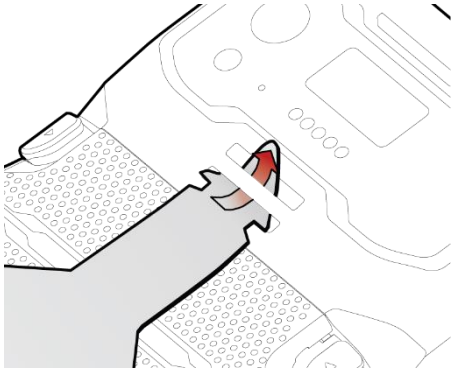

2. Insert the arrowhead into the small hole of the hand strap and pass it through the neck.

   Figure 104 Attaching hand strap - 2

   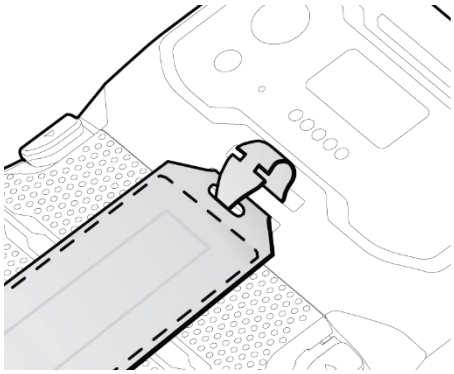

© 2024 Point Mobile Co., Ltd. All rights reserved

Accessories

3. Thread the opposite side of the strap through another hand strap hole.

Figure 105 Attaching hand strap - 3

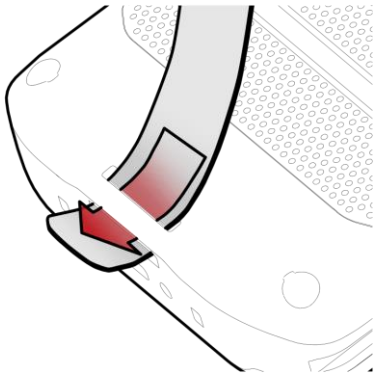

4. Pull the strap and attach the Velcro at the desired length.

Figure 106 Hand strap attached

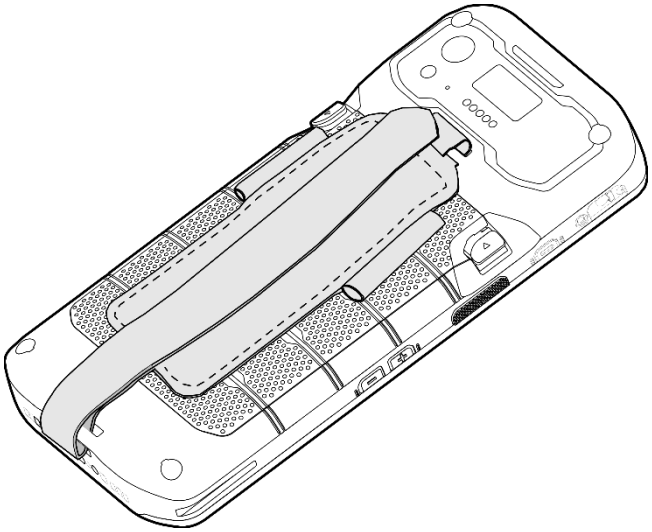

© 2024 Point Mobile Co., Ltd. All rights reserved

Accessories

Wrist band (MSR/ICCR SKU)

Figure 107 Wrist band

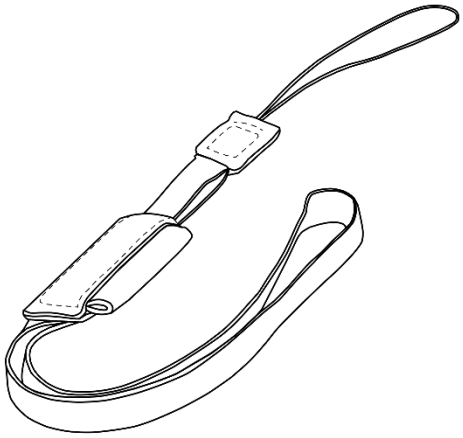

Attach wrist band

1. Thread the thin ropes into the wrist band hole.

   Figure 108 Attaching wrist band

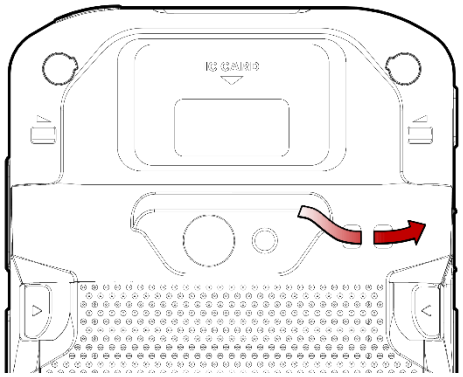

2. Pass the other end through the loop of the rope, and pull it tight.

Rugged boot

To protect the PM95 from damage such as drop or tumble, attach a rugged boot to PM95.

© 2024 Point Mobile Co., Ltd. All rights reserved

Accessories

Gun Handle

With gun handle, you can use additional programmable button. The button is used for triggering scanner usually.

If you want to change the function mapped to the trigger button, access Program Buttons and set **SCANNER_B** to the desired function.

Figure 109 PM95/84 Gun handle

Attach gun handle

1. Put the PM95's top side to the fixture of the gun handle first.
2. Push the bottom side to engage the gun handle firmly.

Figure 110 Attaching gun handle

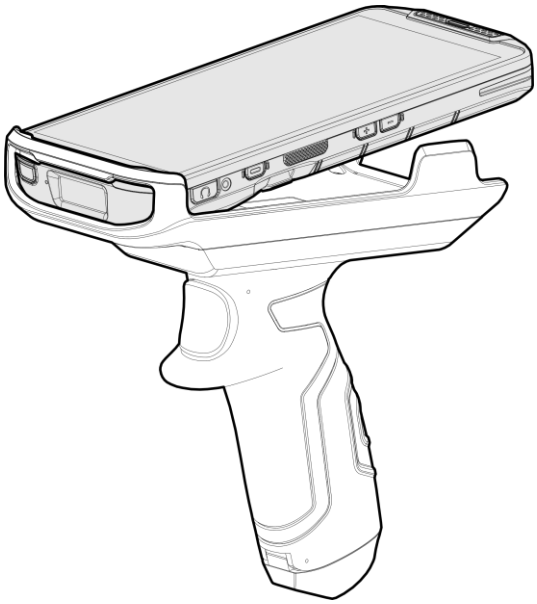

© 2024 Point Mobile Co., Ltd. All rights reserved

Accessories

Attach gun handle's hand strap

A hand strap is enclosed in the gun handle package. Attach the strap and carry the device more comfortably.

Figure 111 Gun handle - hand strap

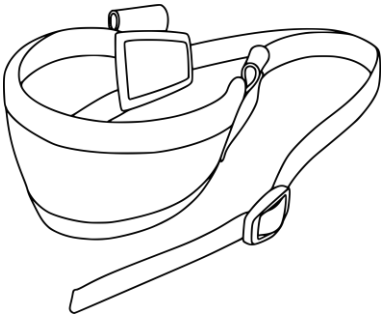

1. Thread the strap through the hole on the bottom side of the retention fixture

   Figure 112 Gun handle - Attach hand strap_1

   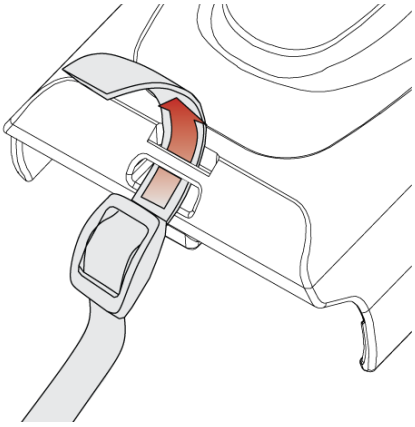

2. Slide the strap through the buckle at the appropriate length.

   Figure 113 Gun handle - Attach hand strap_2

   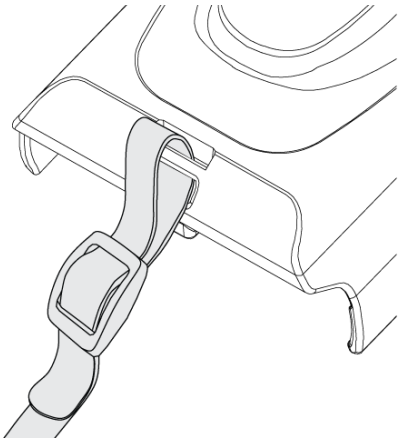

© 2024 Point Mobile Co., Ltd. All rights reserved

Accessories

RF88 (RFID Reader)

PM95 can get RFID tag data through RF88. PM95 and RF88 can be connected using Bluetooth or wired connection.

To connect the devices, RFID Control application is required. You can download the app from Service Portal.

If you want to install the PM95 onto the RFID reader, a PM95-dedicated sled bracket must be assembled on the RF88 referring to the RF88 User Manual – Sled Bracket Replacement chapter.

For more detail, see RF88 User Manual.

© 2024 Point Mobile Co., Ltd. All rights reserved

Accessories

Charging cradle

Single Slot (Ethernet) Cradle (SSC / SEC)

SSC/SEC can charge the followings.

- With Cradle cup
  - PM95 only
- Without Cradle cup
  - PM95 with gun handle mounted
  - PM95 with RF88 (RFID reader) mounted
  - PM95 with rugged boot

To charge the device with a sled type accessory mounted or with a rugged boot, you must remove the cradle cup from the cradle's device slot. For more detail, see the PM95/PM84 SSC / SEC Quick start guide.

SSC/SEC is compatible with PM84 and PM95 both.

Figure 114 PM95/84 SSC/SEC

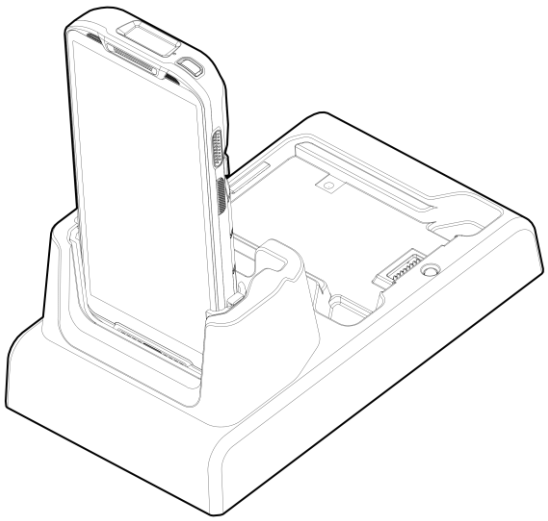

© 2024 Point Mobile Co., Ltd. All rights reserved

Accessories

4SBC (4 Slot Battery Cradle)

4SBC has 4 battery slots so it can charge up to four pieces of PM95's battery simultaneously. For more detail, see the PM95/PM84 4SBC Quick start guide.

4SBC is compatible with PM84 and PM95 batteries both.

Figure 115 PM95/84 4SBC

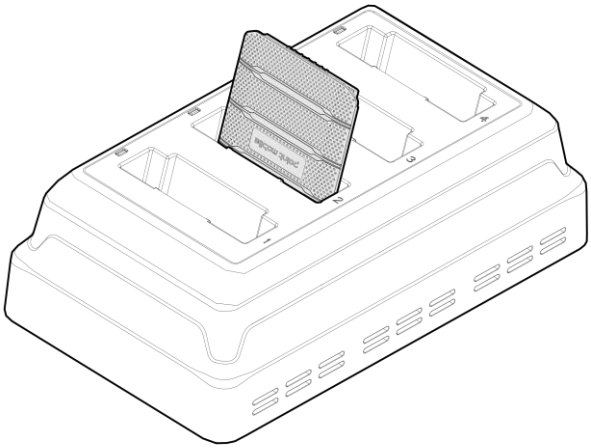

© 2024 Point Mobile Co., Ltd. All rights reserved

Safety Information

Battery Safety Information

Follow the battery safety guidelines for safe usage, storage, and disposal of Li-ion batteries. Improper battery use may result in a fire, explosion, or other critical hazards.

Battery Safety Guidelines

- Use only Point Mobile approved batteries and charging accessories. Other batteries and chargers may damage the device or result in a fire, leakage, or other hazards.
- Do not expose the battery to excessive heat or cold.
- Do not use or store the battery in or near areas that might get very hot, such as in a parked vehicle, near a heat duct or close to other heat sources.
- Do not allow objects that may cause a short circuit, such as metal objects, corrosive substances, or liquids like water, to contact the battery.
- Do not disassemble, crush, bend, shred, press, or other actions that may damage or deform the battery.
- Do not use or replace the battery on the go or from a high location. Dropping may result in an explosion or fire.
- Do not put any labels, stickers, tags, etc. on the device or battery. Performance of the device or battery, such as sealing, drop, or tumble, could be affected.
- Close supervision is necessary when used near children to avoid the risk of injury.
- If battery leakage is observed, avoid any contact with the skin or eyes and properly dispose of the battery. If contact has been made, wash the affected area with water for 15 minutes and seek medical advice.
- If you notice any type of damage to the battery, such as swelling, dents, and leaks, stop using it immediately and contact Point Mobile.

Battery Charging Guidelines

- Charge the battery in a clean, cool, dry, and ventilated environment.
- Separate the charger from the battery as soon as possible when the battery is fully charged.
- Battery performance can degrade due to the stress of daily charging and discharging. Batteries typically need to be replaced after 300 to 500 charging cycles (full charge-discharge cycles) or when the battery capacity has been reduced to 70 ~ 80% of its original capacity. The actual number of charging cycles varies based on usage patterns, temperature, age, and other factors.

© 2024 Point Mobile Co., Ltd. All rights reserved

Safety Information

Battery Storage / Disposal Guidelines

- Store the batteries in a clean, dry and ventilated environment within ambient temperature ranges of 20±5℃.
- For safety regulations, batteries are charged to below 20~30% of full capacity during production.
- When not using batteries for a long period, charge the battery for 30 minutes to 1 hour at least once every 6 months to prevent full discharge and keep the performance.
- Batteries should be stored separately when storing for long periods. Disconnect from any device, charger, or cradle.
- Dispose of used batteries promptly according to local disposal regulations.
- Do not dispose of the battery in fire. It may cause explosion.

Notice: *The battery is consumable. Point Mobile provides a warranty for the battery for 12 months after purchase. If you suspect the battery swelling, change the battery immediately and contact Point Mobile.*

© 2024 Point Mobile Co., Ltd. All rights reserved

Safety Information

www.sar-tick.com

Body-worn Operation

This device was tested for typical use with the front & back of the device kept 0.59 inches (1.5 cm) from the body.

To comply with FCC RF exposure requirements, a minimum separation distance of 0.59 inches (1.5 cm) must be maintained between the user's body and the front & back of the device.

Any belt-clips, holsters, and similar accessories containing metallic components may not be used.

Avoid the use of accessories that cannot maintain 0.59 inches (1.5 cm) distance between the user's body and the front & back of the device and have not been tested for compliance with FCC RF exposure limits.

PROTECT YOUR HEARING

To prevent possible hearing damage, do not listen at high volume levels for long periods. Exercise caution when holding your device near your ear while the loudspeaker is in use.

© 2024 Point Mobile Co., Ltd. All rights reserved

Safety Information

HAC notice:

The following statement is related to FCC ID: V2X-PM95 and is not related to FCC ID: V2X-PM95W.

This phone meets the Federal Communications Commission (FCC) Hearing Aid Compatibility (HAC) requirements. This means that the phone has been tested with hearing aids from various manufacturers and has been found to reduce interference with hearing aids operating in both acoustic mode (when the handset is placed near the ear) and inductive coupling mode (when the handset is connected to a hearing aid's telecoil). This phone has been tested and compliance under (ANSI) C63.19 2019, and this version does not use the rating system that older versions of the standard used. They are either HAC-compliant or not. In addition, in this version of the standard, the conversational gain of the device is tested, both with and without hearing aids.
Conversational gain with hearing aids: 8.60 dB

Conversational gain without hearing aids: 15.59 dB

This phone has been tested and certified for use with hearing aids for some of the wireless technologies that it uses. However, there may be some newer wireless technologies used in this phone that have not been tested yet for use with hearing aids. It is important to try the different features of this phone thoroughly and in different locations, using your hearing aid or cochlear implant, to determine if you hear any interfering noise. Consult your service provider or the manufacturer of this phone for information on hearing aid compatibility. If you have questions about return or exchange policies, consult your service provider or phone retailer.

Important: Individual hearing aids may vary, depending on the level of immunity of your hearing aid and the degree of your hearing loss. If your hearing aid is vulnerable to interference, you may not be able to use a rated phone successfully. Trying out the phone with your hearing aid is the best way to evaluate it for your personal needs. Consult your service provider or the manufacturer of this phone for information on hearing aid compatibility.

© 2024 Point Mobile Co., Ltd. All rights reserved

Safety Information

FCC Warning

FCC part 15

This equipment has been tested and found to comply with the limits for a Class B digital device, pursuant to part 15 of the FCC Rules. These limits are designed to provide reasonable protection against harmful interference in a residential installation.

This equipment generates, uses and can radiate radio frequency energy and, if not installed and used in accordance with the instructions, may cause harmful interference to radio communications. However, there is no guarantee that interference will not occur in a particular installation. If this equipment does cause harmful interference to radio or television reception, which can be determined by turning the equipment off and on, the user is encouraged to try to correct the interference by one or more of the following measures:

• Reorient or relocate the receiving antenna.

• Increase the separation between the equipment and receiver.

• Connect the equipment into an outlet on a circuit different from that to which the receiver is connected.

• Consult the dealer or an experienced radio/TV technician for help

Caution: Any changes or modifications to this device not explicitly approved by manufacturer could void your authority to operate this equipment.

This device complies with part 15 of the FCC Rules. Operation is subject to the following two conditions:

(1) This device may not cause harmful interference, and (2) this device must accept any interference received, including interference that may cause undesired operation.

This equipment complies with FCC radiation exposure limits set forth for an uncontrolled environment.

Operation of transmitters in the 5.925-7.125 GHz band is prohibited for control of or communications with unmanned aircraft systems.

CE Warning

This device can be operated in at least one Member State without infringing applicable requirements on the use of radio spectrum.

E-Label

Users can able to access the FCC/IC information in 3 steps in device's menu. The actual steps are : → **Settings -> About phone -> Certificates**

© 2024 Point Mobile Co., Ltd. All rights reserved

Point Mobile. Co., Ltd.

Offline

Tel: +82-2-3397-7870~1
ARS: +82-1800-3010
Fax: +82-2-3397-7872
Address: 26F, Building A, Gasan Publik,
178, Digital-ro, Geumcheon-gu, Seoul, Korea 08513

Online

Website: https://www.pointmobile.com
E-mail : pm_ta@pointmobile.com

Copyright © 2024. Point Mobile Co., Ltd. All rights reserved. Point Mobile Co., Ltd. is the designer and manufacturer of handheld mobiles.
Point Mobile Co., Ltd. Logo are registered trademarks and symbols of Point Mobile Co., Ltd. Features and specifications are subject to change without prior notice.